6. Dimensions

6.1 Indoor Unit & Remote Control

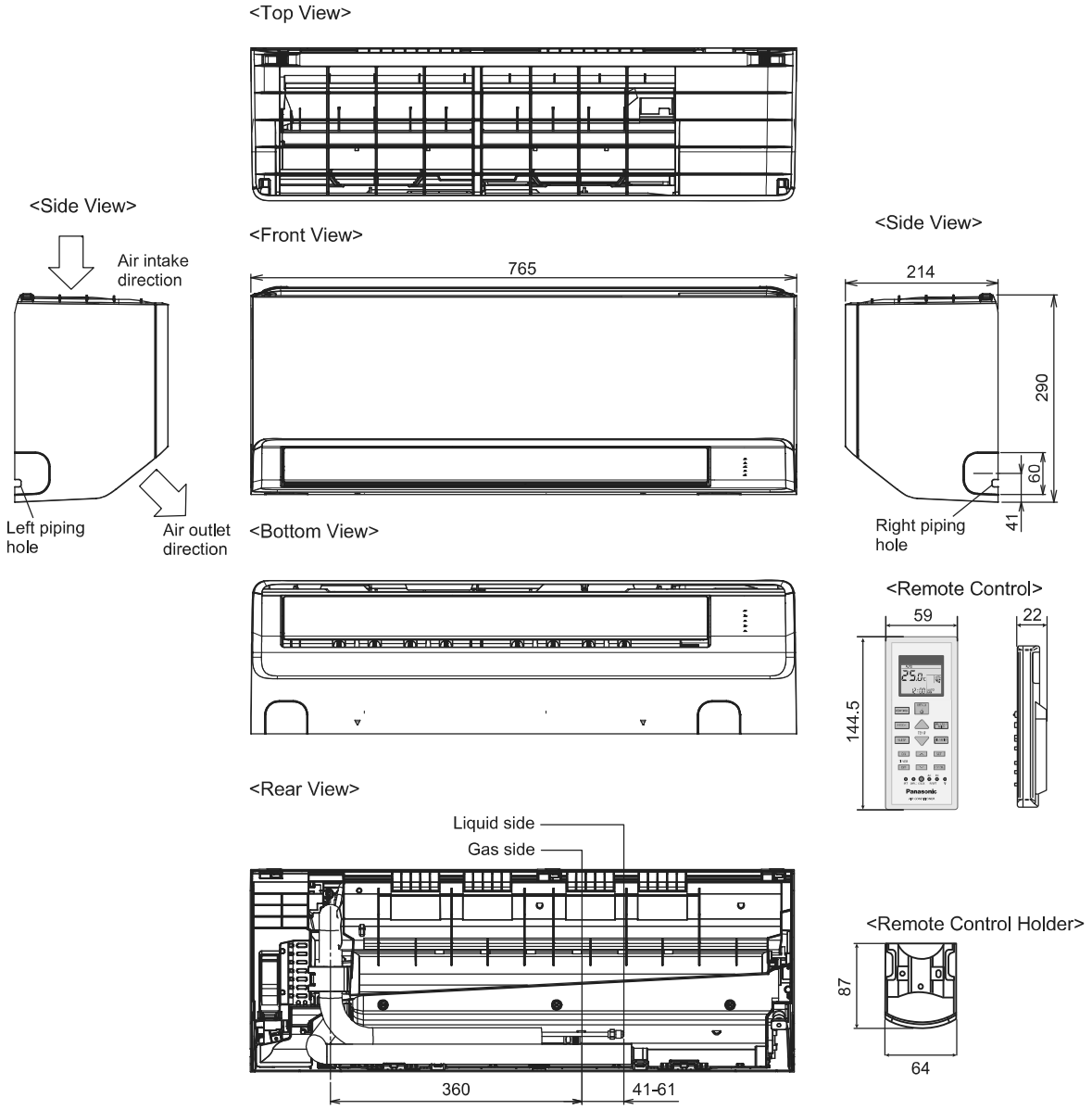
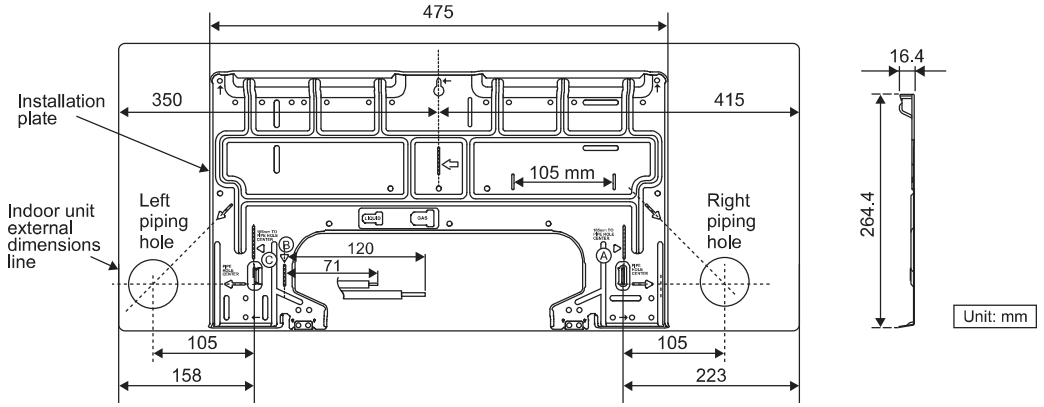
Relative position between the indoor unit and the installation plate <Front View>