2.3. INDOOR CEILING CASSETTE: RAI-25RPE, RAI-35RPE, RAI-50RPE, RAI-60RPE

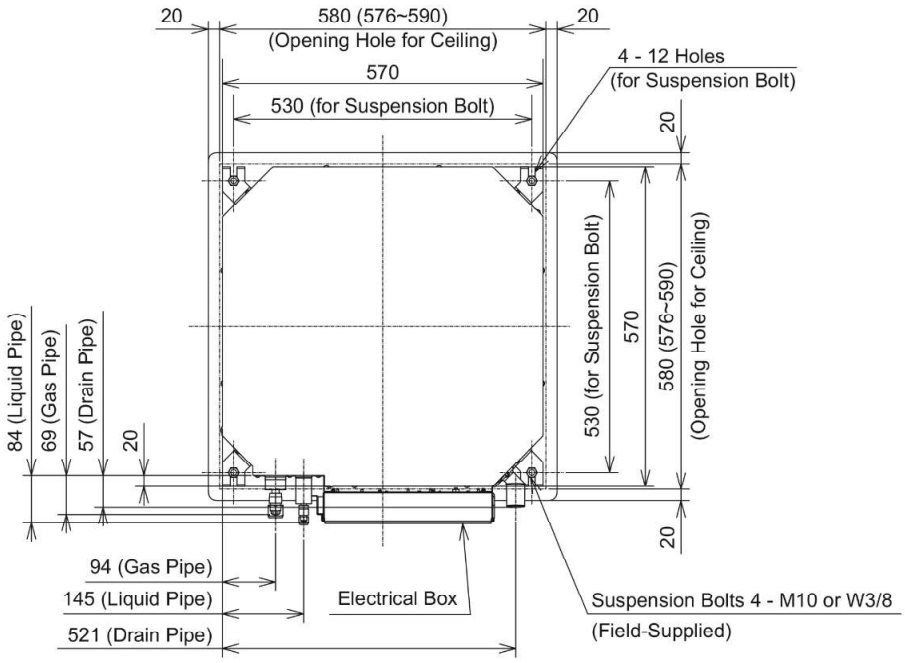

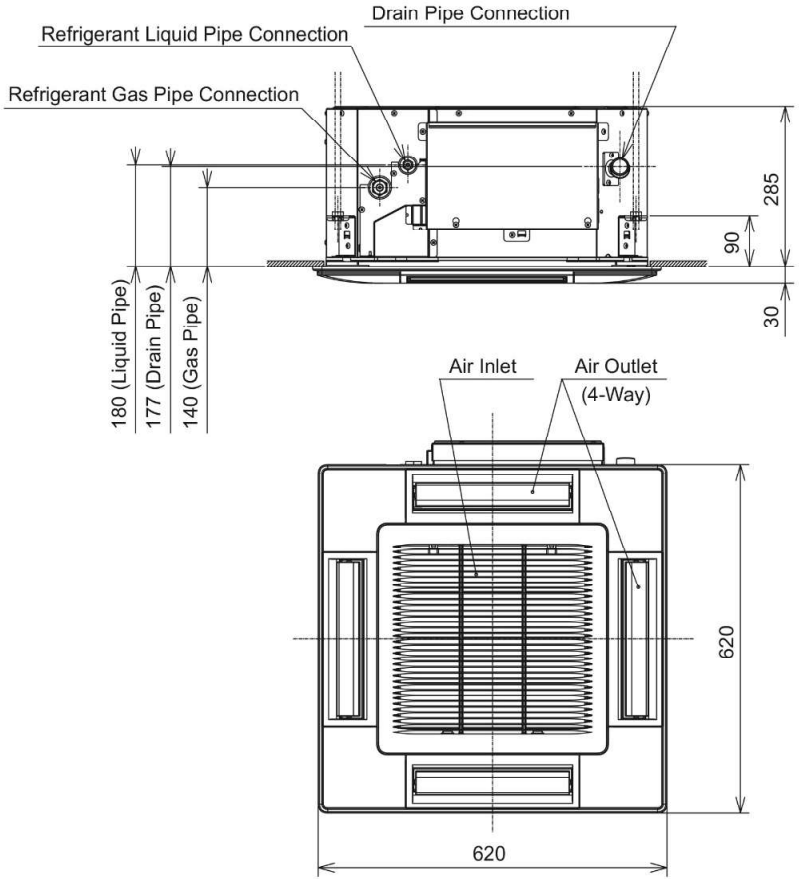

Unit: mm