HITACHI

TECHNICAL CATALOGUE

MONO SPLIT

RAC-25WSE
RAC-35WSE

RAK-25PSEW
RAK-35PSEW
RAK-50PSEW

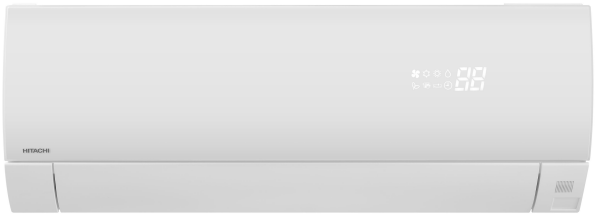

RAC-50WSE

RAK-25PSES
RAK-35PSES
RAK-50PSES

HITACHI

Specifications in this catalogue are subject to change without prior notice in order for HITACHI to bring in the latest innovations to their customers

Whilst every effort is made to ensure that all dimensions and specifications are correct, any printers' error not rectified are outside the control of HITACHI, who cannot be held responsible for the same

CONTENTS

1 SPECIFICATIONS

1.1. WALL TYPE (RAK-25PSEW/35PSEW/50PSEW/25PSES/35PSES/50PSES)

INDOOR	UNIT	RAK-25PSEW RAK-25PSES	RAK-35PSEW RAK-35PSES	RAK-50PSEW RAK-50PSES
Nominal capacity adjustable		no	no	no
Nominal Cooling capacity (min - max)	kW	2.50 (0.50 - 3.40)	3.50 (0.50- 4.10)	5.00 (1.90- 5.20)
Cooling sensible capacity	kW	2.20	2.70	3.50
Nominal Heating capacity (min - max)	kW	3.20 (0.60- 5.80)	4.00 (0.60- 6.60)	6.00 (2.20- 7.00)
Noise level cooling (sound pressure) (SL / L / M / H)	dB(A)	22/28/34/41	22/29/36/43	25/31/38/46
Noise level heating (sound pressure) (SL / L / M / H)	dB(A)	22/28/34/42	22/29/36/44	25/31/38/48
Noise level (sound power)	dB(A)	55	57	60
Air flow cooling mode (SL / L / M / H)	m^3/h	270/320/420/510	270/340/440/540	300/400/490/590
Air flow heating mode (SL / L / M / H)	m^3/h	310/400/490/600	310/430/520/630	330/450/560/680
Fan Motor	W	30	30	30
Dehumidification	l/h	1.4	1.6	2.0
Dimensions (H x W x D)	mm	294 x 795 x 250	294 x 795 x 250	294 x 795 x 250
Weight	kg	11	11	11
Condensate Drain	mm	φ 16	φ 16	φ 16
Running current (C/H)	A	1.30-4.00/1.91-6.52	1.52-5.87/2.17-8.70	1.74-7.91/2.61-11.5
Power supply		230V/1Ph/50Hz	230V/1Ph/50Hz	230V/1Ph/50Hz
Cable section (interconnection)	mm^2	1.50x 3+EARTH/-	1.50x 3+EARTH/-	2.50x 3+EARTH/-
Piping diameter (Liq / Gas)	Inch	1/4" / 3/8"	1/4" / 3/8"	1/4" / 1/2"
Drain diameter (ext)	mm	φ 16	φ 16	φ 16
Remote control (standard/optional)		RAR-6NE2/SPX-RCDB	RAR-6NE2/SPX-RCDB	RAR-6NE2/SPX-RCDB
Filter				
ACL Filter Optional		-	-	-
ACL part name		-	-	-
Pre-filter(Standard/Optional)		Micro Mesh Stainless/-	Micro Mesh Stainless/-	Micro Mesh Stainless/-

NOTE:

1. *The nominal cooling and heating capacity is the combined capacity of the HITACHI standard split system, and are based on the ISO 5151.*

Operation Conditions		Cooling	Heating
Indoor Air Inlet Temperature	dB	27.0 °C	20.0 °C
	WB	19.0 °C	15.0 °C
Outdoor Air Inlet Temperature	dB	35.0 °C	7.0 °C
	WB	24.0 °C	6.0 °C
Piping Length: 5.0 meters; **Piping Lift**: 0 meter **dB**: Dry Bulb; **WB**: Wet Bulb			

2. *The Sound Pressure Level is based on the following conditions:*

- *0.8 meter beneath indoor height center*
- *1 meter from Discharge grille*

The above data was measured in an anechoic chamber. Please take into consideration reflected sound of your specific site

1.2. WALL TYPE (RAC-25WSE/35WSE/50WSE)

OUTDOOR		UNIT	RAC-25WSE	RAC-35WSE	RAC-50WSE
Nominal Cooling capacity (min - max)		kW	2.50 (0.50 - 3.40)	3.50 (0.50- 4.10)	5.00 (1.90- 5.20)
Nominal Heating capacity (min - max)		kW	3.20 (0.60- 5.80)	4.00 (0.60- 6.60)	6.00 (2.20- 7.00)
Nominal cooling power input (min - max)		kW	0.490 (0.300 - 0.920)	0.778(0.350 - 1.350)	1.389 (0.400 - 1.820)
Nominal heating power input (min - max)		kW	0.621(0.440 - 1.500)	0.800(0.500 - 2.000)	1.622(0.600 - 2.650)
EER / COP			5.10/5.15	4.50/5.00	3.60/3.70
SEER / SCOP			9.00/5.10	9.00/5.10	7.50/4.70
Energy class (SEER/SCOP)			A+++/A+++	A+++/A+++	A++/A++
Noise level cooling (sound pressure)		dB(A)	47	48	51
Noise level heating (sound pressure)		dB(A)	48	50	51
Noise level (sound power)		dB(A)	61	62	65
Air flow (Cooling / Heating)		m3/h	1860/1620	1920/1620	2160/2160
Dimensions (H x W x D)		mm	600× 792× 299	600× 792× 299	736x800x350
Weight		kg	37	37	51
Colour (Munsell Code)			Beige (5Y7/2)	Beige (5Y7/2)	Beige (5Y7/2)
Power supply		V/Ph/Hz	230V / 1Ph / 50Hz	230V / 1Ph / 50Hz	230V / 1Ph / 50Hz
Recommended fuse size		A	15	15	25
Starting current(C/H)		A	2.26/2.85	3.56/3.65	6.33/7.38
Running current (C/H)		A	1.30-4.00/1.91-6.52	1.52-5.87/2.17-8.70	1.74-7.91/2.61-11.52
Cable section (power)		mm²	1.50x 2+EARTH	1.50x 2+EARTH	2.50x 2+EARTH
Cable section (Interconnection)		mm²	1.50x 3+EARTH	1.50x 3+EARTH	2.50x 3+EARTH
Piping diameter (Liq / Gas)		Inch	1/4" / 3/8"	1/4" / 3/8"	1/4" / 1/2"
Minimum piping length		m	3	3	3
Maximum piping length / height difference		m	20 / 10	20 / 10	30/10
Current quantity of refrigerant / Chargeless		kg	0.980	0.980	1.240
Chargeless length / Additional refrigerant charge		m / g/m	20/-	20/-	30/-
Working range (cooling / heating)		°C	-10℃—43℃/-20℃—24℃	-10℃—43℃/-20℃—24℃	-10℃—43℃/-20℃—24℃
Refrigerant			R32	R32	R32
Condenser Fan			Propeller Fan	Propeller Fan	Propeller Fan
Compressor	Type		ROTARY	ROTARY	2 Cylinder Rotary
	Oil Charge	mL	320±20	320±20	480±20
	Oil Type		ACS-68Rorequivalent	ACS-68Rorequivalent	ACS-68Rorequivalent
	Coil resistance	Ω	1.354 at 20℃	1.354 at 20℃	1.354 at 20℃
	Quantity		1	1	1

NOTE:

1. *The Sound Pressure Level is based on the following conditions:*

- *1 meter from the unit front surface and 1 meter from floor level*

The above data was measured in an anechoic chamber. Please take into consideration reflected sound of your specific site

2 DIMENSIONAL DATA

2.1. WALL TYPE: RAK-25PSEW/35PSEW/50PSEW/25PSES/35PSES/50PSES

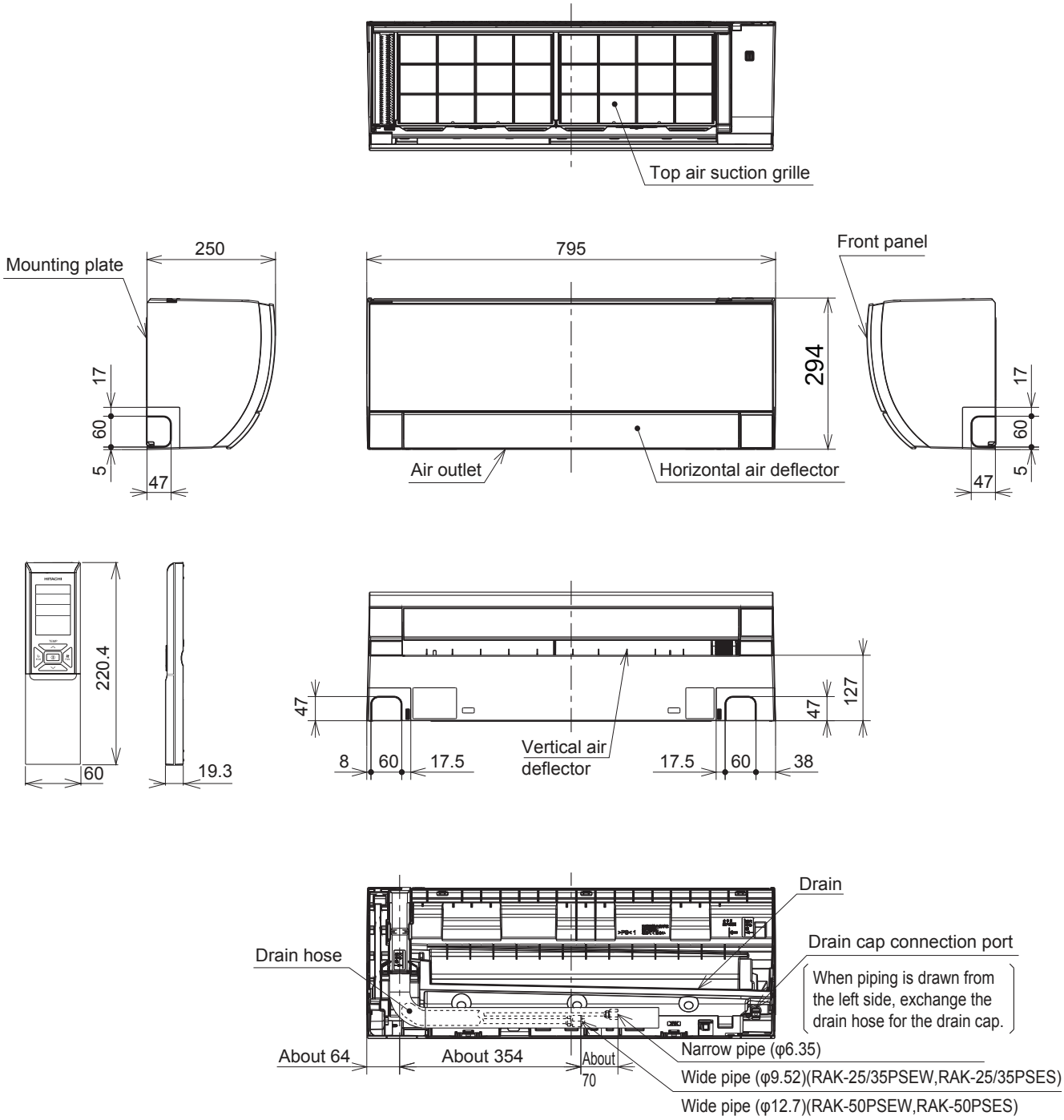

2.2. WALL TYPE: RAC-25WSE/35WSE

Unit : mm

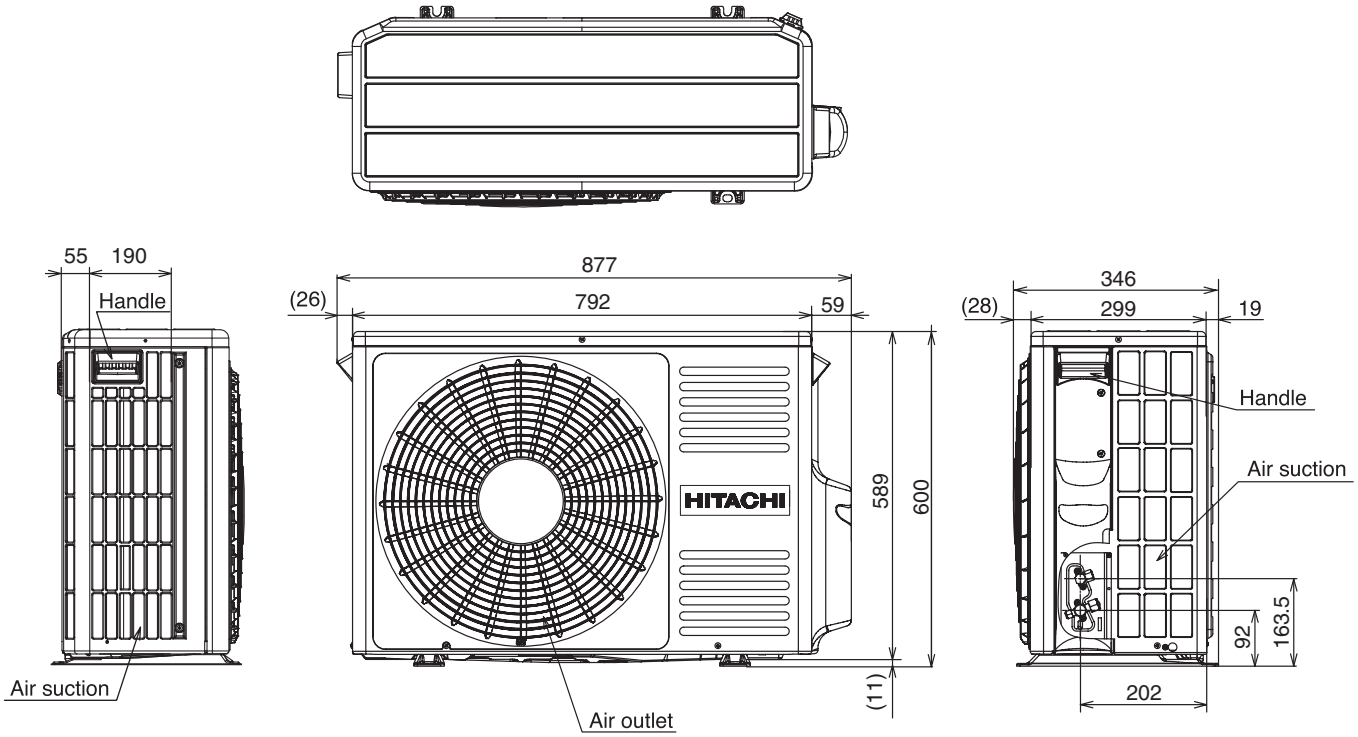

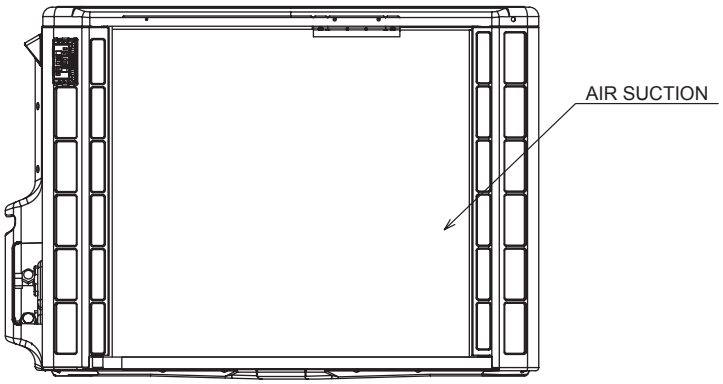

View from the rear

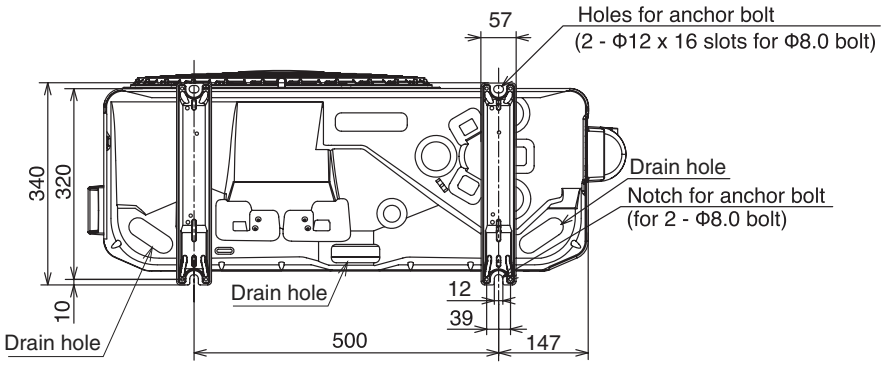

2.3. WALL TYPE: RAC-50WSE

Unit : mm

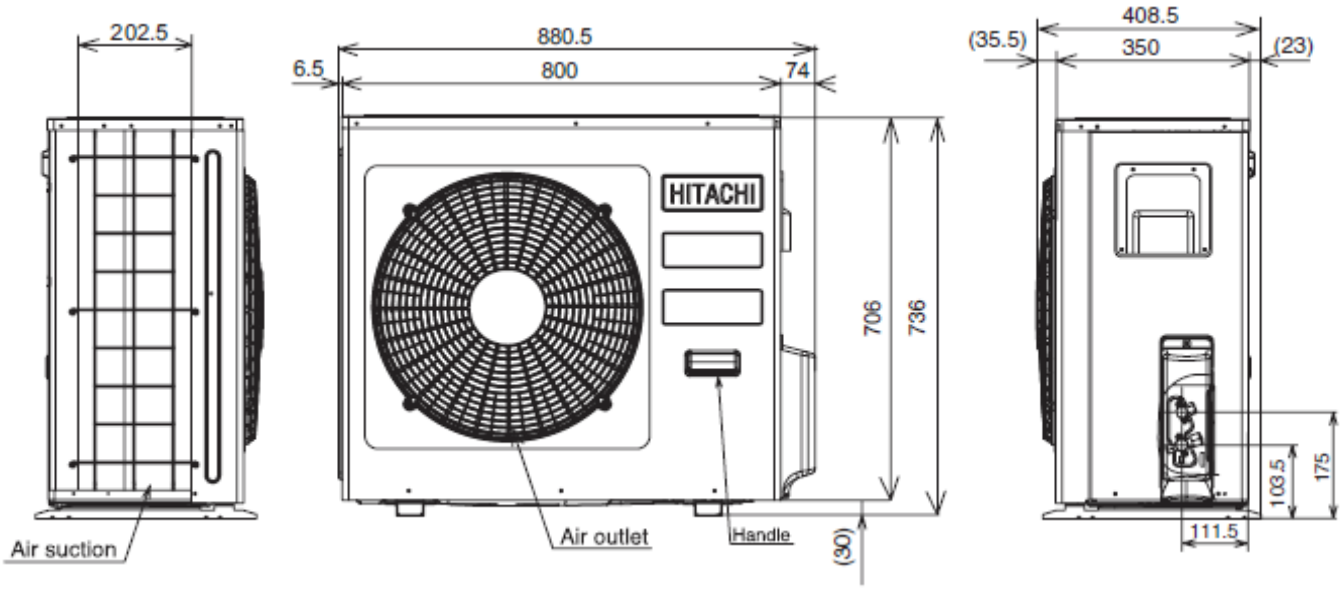

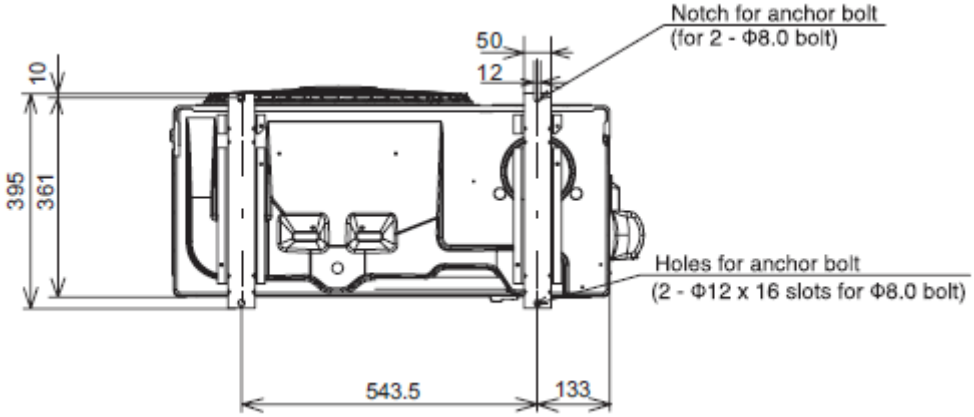

3 CAPACITIES TABLE

3.1. CAPACITY CHARACTERISTIC CURVES

The following charts show the characteristics of outdoor unit capacity, which corresponds with the operating ambient temperature of outdoor unit.
Condition:

①Pipe length / height difference : 5m / 0m

②Indoor fan speed at High mode

③Capacity loss due to white frost and defrost operation is not included.

3.1.1 RAK-25PSEW/RAC-25WSE RAK-25PSES/RAC-25WSE

COOLING [50Hz, 230V]

INDOOR		OUTDOOR TEMPERATURE (°CDW)																				
EWB	EDB	-10			21			27			32			35			40			43		
°C	°C	TC	SHC	PI	TC	SHC	PI	TC	SHC	PI	TC	SHC	PI	TC	SHC	PI	TC	SHC	PI	TC	SHC	PI
12.0	18	1976	1634	278	2350	2288	346	2175	2112	408	2050	2002	451	1975	1914	470	1850	1804	505	1775	1716	524
14.0	20	1976	1634	278	2525	2288	346	2350	2134	413	2200	2002	456	2125	1936	475	1975	1804	510	1900	1738	534
16.0	22	1976	1739	282	2700	2288	351	2500	2134	418	2350	2002	461	2275	1936	485	2125	1804	519	2050	1738	539
18.0	25	2119	1864	286	2875	2486	355	2650	2310	423	2500	2178	466	2400	2090	485	2250	1958	524	2150	1870	544
19.0	27	2190	1927	291	2975	2618	360	2750	2420	427	2600	2288	470	2500	2200	490	2350	2068	524	2250	1980	544
22.0	30	2428	1906	291	3300	2596	360	3050	2398	427	2875	2266	475	2775	2178	495	2500	2112	544	2325	2068	573
24.0	32	2595	1906	295	3525	2596	365	3250	2398	432	3075	2266	475	2950	2178	500	2600	2156	559	2375	2134	593

HEATING [50Hz, 230V]

INDOOR	OUTDOOR TEMPERATURE (°CDW)																							
EDB	-15			-10			-7			-5			0			7			10			15		
°C	TC	SHC	PI	TC	SHC	PI	TC	SHC	PI	TC	SHC	PI	TC	SHC	PI	TC	SHC	PI	TC	SHC	PI	TC	SHC	PI
16	3232		1216	3482		1316	3640		1368	3589		1252	3451		976	3237		566	3385		623	3659		716
18	3216		1223	3466		1323	3620		1379	3566		1266	3426		991	3218		594	3368		652	3630		748
20	3200		1230	3450		1330	3600		1390	3543		1280	3400		1006	3200		621	3350		681	3600		781
22	3184		1237	3434		1337	3580		1401	3520		1294	3374		1020	3182		648	3332		710	3570		814
24	3168		1244	3418		1344	3560		1412	3496		1308	3349		1035	3163		676	3315		739	3541		846

EWB : Evaporator Wet Bulb temperature (°C)
EDB : Evaporator Dry Bulb temperature (°C)
(°CDB) : Outdoor Unit Inlet Air Dry Temperature (°C)

TC : Total Capacity (W)
SHC : Sensible Heating Capacity (W)
PI : Power Input

3.1.2 RAK-35PSEW/RAC-35WSE
RAK-35PSES/RAC-35WSE

COOLING [50Hz, 230V]

INDOOR		OUTDOOR TEMPERATURE (°CDW)																				
EWB	EDB	-10			21			27			32			35			40			43		
°C	°C	TC	SHC	PI	TC	SHC	PI	TC	SHC	PI	TC	SHC	PI	TC	SHC	PI	TC	SHC	PI	TC	SHC	PI
12.0	18	2770	2008	442	3147	2686	526	2913	2479	620	2870	2457	716	2765	2349	747	2590	2214	801	2485	2106	832
14.0	20	2770	2008	442	3381	2686	526	3147	2505	627	3080	2457	724	2975	2376	755	2765	2214	809	2660	2133	848
16.0	22	2770	2137	448	3616	2686	533	3348	2505	634	3290	2457	731	3185	2376	770	2975	2214	825	2870	2133	856
18.0	25	2971	2292	455	3850	2918	540	3549	2712	642	3500	2673	739	3360	2565	770	3150	2403	832	3010	2295	864
19.0	27	3071	2369	462	3984	3073	547	3683	2841	649	3640	2808	747	3500	2700	778	3290	2538	832	3150	2430	864
22.0	30	3404	2343	462	4419	3047	547	4084	2815	649	4025	2781	755	3885	2673	786	3500	2592	864	3255	2538	910
24.0	32	3638	2343	469	4720	3047	554	4352	2815	656	4305	2781	755	4130	2673	794	3640	2646	887	3325	2619	941

HEATING [50Hz, 230V]

INDOOR	OUTDOOR TEMPERATURE (°CDW)																							
EDB	-15			-10			-7			-5			0			7			10			15		
°C	TC	SHC	PI	TC	SHC	PI	TC	SHC	PI	TC	SHC	PI	TC	SHC	PI	TC	SHC	PI	TC	SHC	PI	TC	SHC	PI
16	3940		1381	4378		1400	4651		1400	4572		1302	4364		1074	4046		725	4307		732	4774		741
18	3920		1390	4358		1409	4625		1415	4543		1321	4332		1095	4023		763	4285		772	4737		786
20	3900		1400	4338		1419	4600		1430	4514		1340	4300		1115	4000		800	4263		811	4700		830
22	3880		1410	4318		1428	4575		1445	4485		1359	4268		1135	3977		837	4241		851	4663		874
24	3860		1419	4298		1438	4550		1460	4456		1378	4236		1156	3954		875	4219		891	4626		919

EWB : Evaporator Wet Bulb temperature (°C)
EDB : Evaporator Dry Bulb temperature (°C)
(°CDB) : Outdoor Unit Inlet Air Dry Temperature (°C)

TC : Total Capacity (W)
SHC : Sensible Heating Capacity (W)
PI : Power Input

3.1.3 RAK-50PSEW/RAC-50WSE
RAK-50PSES/RAC-50WSE

COOLING [50Hz, 230V]

INDOOR		OUTDOOR TEMPERATURE (°CDW)																				
EWB	EDB	-10			21			27			32			35			40			43		
°C	°C	TC	SHC	PI	TC	SHC	PI	TC	SHC	PI	TC	SHC	PI	TC	SHC	PI	TC	SHC	PI	TC	SHC	PI
12.0	18	3956	2602	788	4480	3470	936	4147	3203	1103	4100	3185	1278	3950	3045	1333	3700	2870	1431	3550	2730	1486
14.0	20	3956	2602	788	4814	3470	936	4480	3236	1116	4400	3185	1292	4250	3080	1347	3950	2870	1445	3800	2765	1514
16.0	22	3956	2769	800	5148	3470	948	4766	3236	1129	4700	3185	1306	4550	3080	1375	4250	2870	1472	4100	2765	1528
18.0	25	4242	2969	813	5481	3770	960	5052	3503	1142	5000	3465	1320	4800	3325	1375	4500	3115	1486	4300	2975	1542
19.0	27	4385	3069	825	5672	3970	973	5243	3670	1155	5200	3640	1333	5000	3500	1389	4700	3290	1486	4500	3150	1542
22.0	30	4862	3036	825	6291	3937	973	5815	3637	1155	5750	3605	1347	5550	3465	1403	5000	3360	1542	4650	3290	1625
24.0	32	5195	3036	837	6720	3937	985	6196	3637	1168	6150	3605	1347	5900	3465	1417	5200	3430	1583	4750	3395	1681

HEATING [50Hz, 230V]

INDOOR	OUTDOOR TEMPERATURE (°CDW)																							
EDB	-15			-10			-7			-5			0			7			10			15		
°C	TC	SHC	PI	TC	SHC	PI	TC	SHC	PI	TC	SHC	PI	TC	SHC	PI	TC	SHC	PI	TC	SHC	PI	TC	SHC	PI
16	5458		2069	5708		2131	5873		2151	5913		2056	5993		1845	6067		1500	6214		1530	6507		1577
18	5429		2084	5679		2147	5837		2175	5871		2087	5946		1878	6033		1561	6182		1595	6454		1649
20	5400		2100	5650		2163	5800		2200	5829		2117	5900		1911	6000		1622	6150		1660	6400		1722
22	5371		2116	5621		2178	5763		2225	5787		2148	5854		1944	5967		1683	6118		1724	6346		1795
24	5342		2131	5592		2194	5727		2249	5744		2179	5807		1977	5933		1744	6086		1789	6293		1867

EWB : Evaporator Wet Bulb temperature (°C)
EDB : Evaporator Dry Bulb temperature (°C)
(°CDB) : Outdoor Unit Inlet Air Dry Temperature (°C)

TC : Total Capacity (W)
SHC : Sensible Heating Capacity (W)
PI : Power Input

3.2. CORRECTION FACTORS ACCORDING TO PIPING LENGTH

Correction Factor for **Cooling Capacity** according to Piping Length

The cooling capacity should be corrected according to the following formula:

CCA = CC x F

CCA: Actual Corrected Cooling Capacity (kcal/h)
CC: Cooling Capacity in the Performance Table (kcal/h)
F: Correction Factor Based on the Equivalent Piping Length

Correction Factor for **Heating Capacity** according to Piping Length

The heating capacity should be corrected according to the following formula:

HCA= HC x F

HCA: Actual Corrected Heating Capacity (kcal/h)
HC: Heating Capacity in the Performance Table (kcal/h)
F: Correction Factor Based on the Equivalent Piping Length

The correction factors are shown in the following figure.

Equivalent Piping Length for:

- One 90º Elbow is 0.5m.
- One 180º Curve is 1.5m.

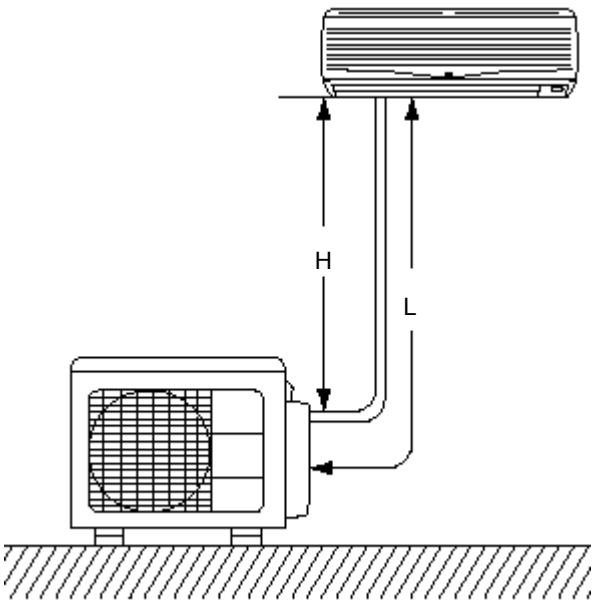

H: Vertical Distance Between Indoor Unit and Outdoor Units in Meters

L: Actual One-Way Piping Length Between Indoor Unit and Outdoor Unit in Meters

EL: Equivalent Total Distance Between Indoor Unit and Outdoor Unit in Meters (Equivalent One-Way Piping Length)

Models : RAK-25PSEW/RAC-25WSE, RAK-35PSEW/RAC-35WSE
RAK-25PSES/RAC-25WSE, RAK-35PSES/RAC-35WSE

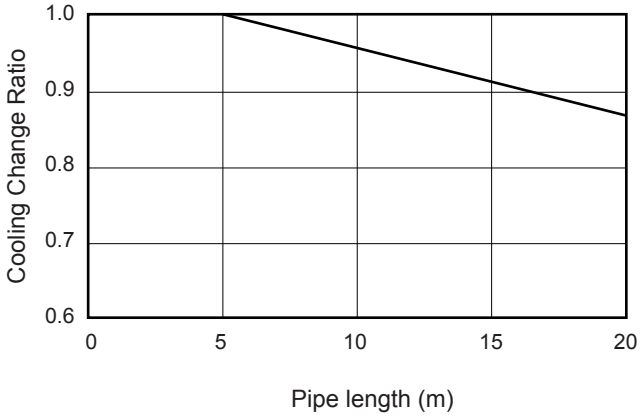

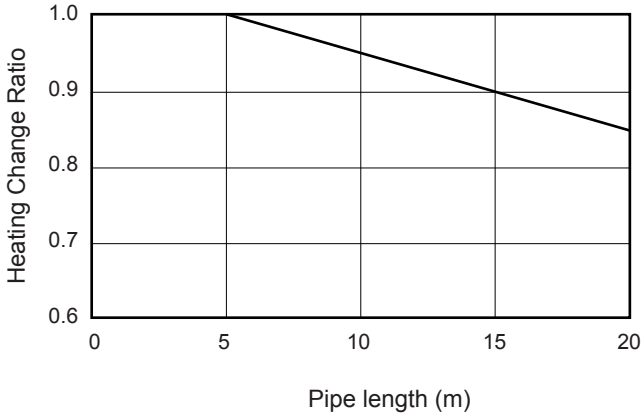

Models : RAK-50PSEW/RAC-50WSE
RAK-50PSES/RAC-50WSE

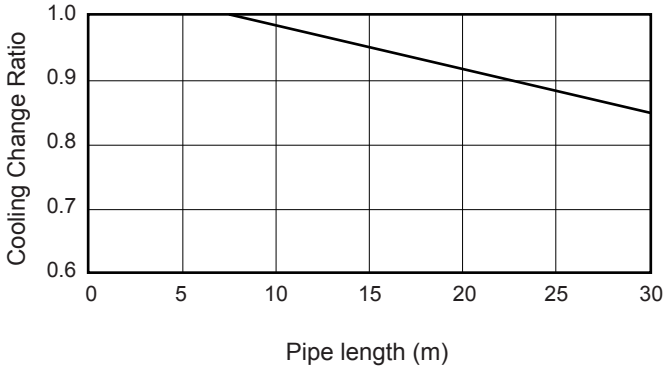

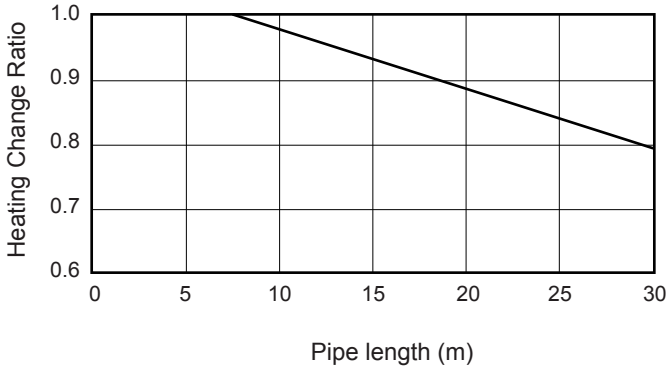

3.3. CORRECTION FACTORS ACCORDING TO DEFROSTING OPERATION

The heating capacity in the preceding paragraph, excludes the condition of the frost or the defrosting operation period. In consideration of the frost or the defrosting operation, the heating capacity is corrected by the equation below.

Corrected heating capacity = Defrost Correction factor x unit capacity

OUTDOOR TEMPERATURE (°CDB)	-15	-10	-7	-5	0	7	10	15
Correction factor (humidity rate85% RH)	0.95	0.95	0.89	0.85	0.81	1.0	1.0	1.0

Correction Factor

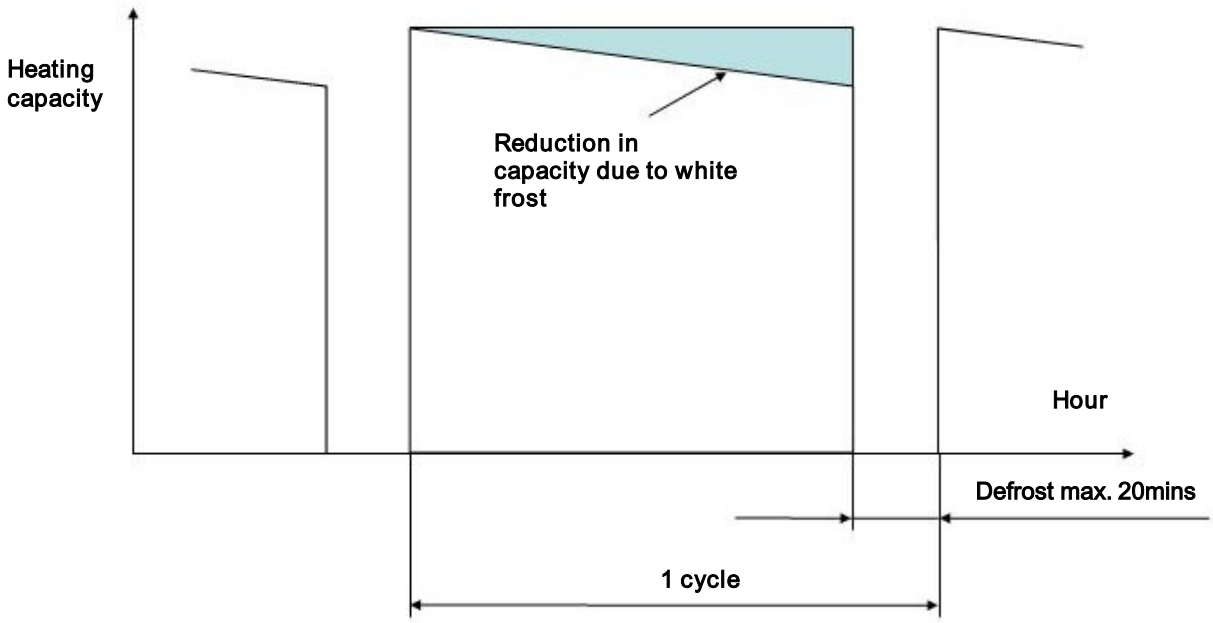

NOTE:
The correction factor is not valid for special conditions such as snowfall or operation in a transitional period.

4 SOUND DATA

4.1. RAC-25WSE

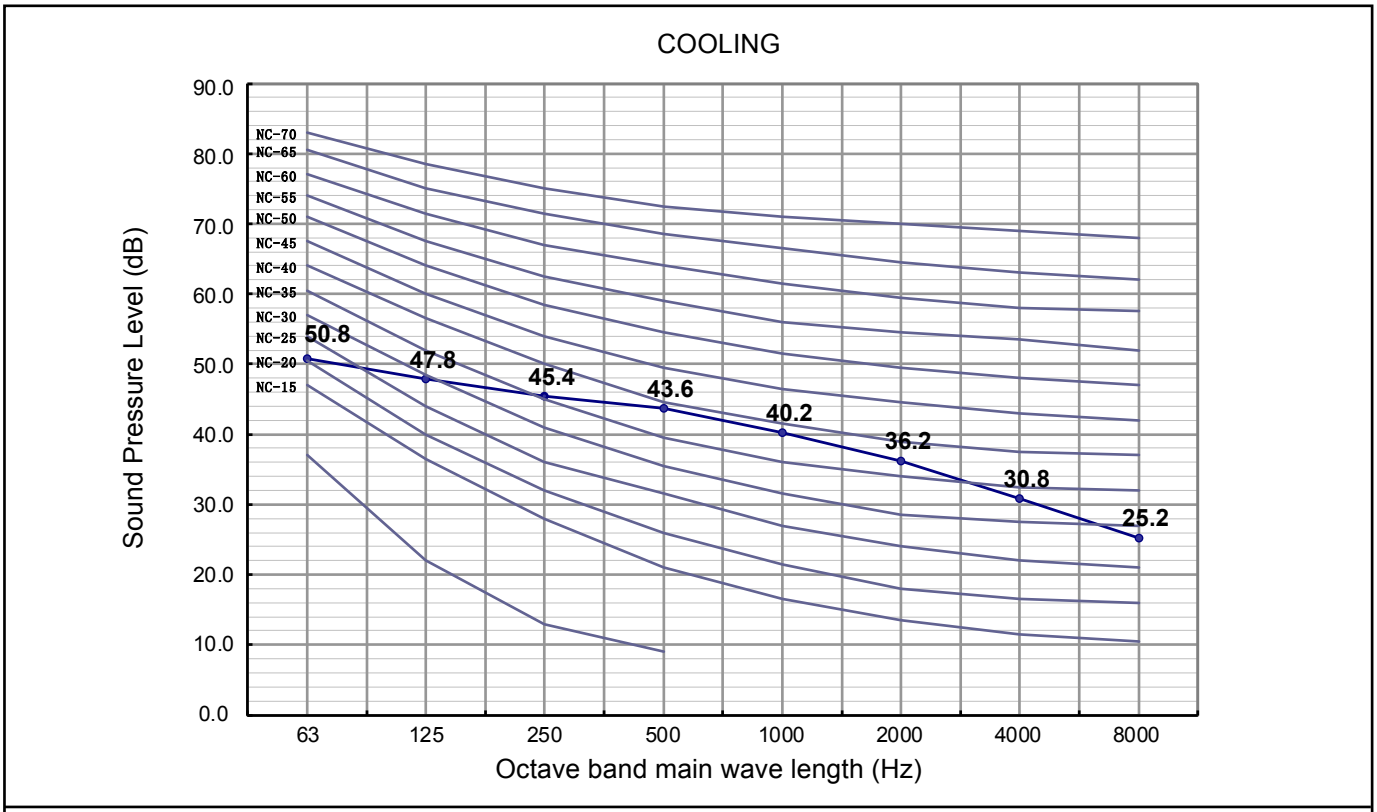

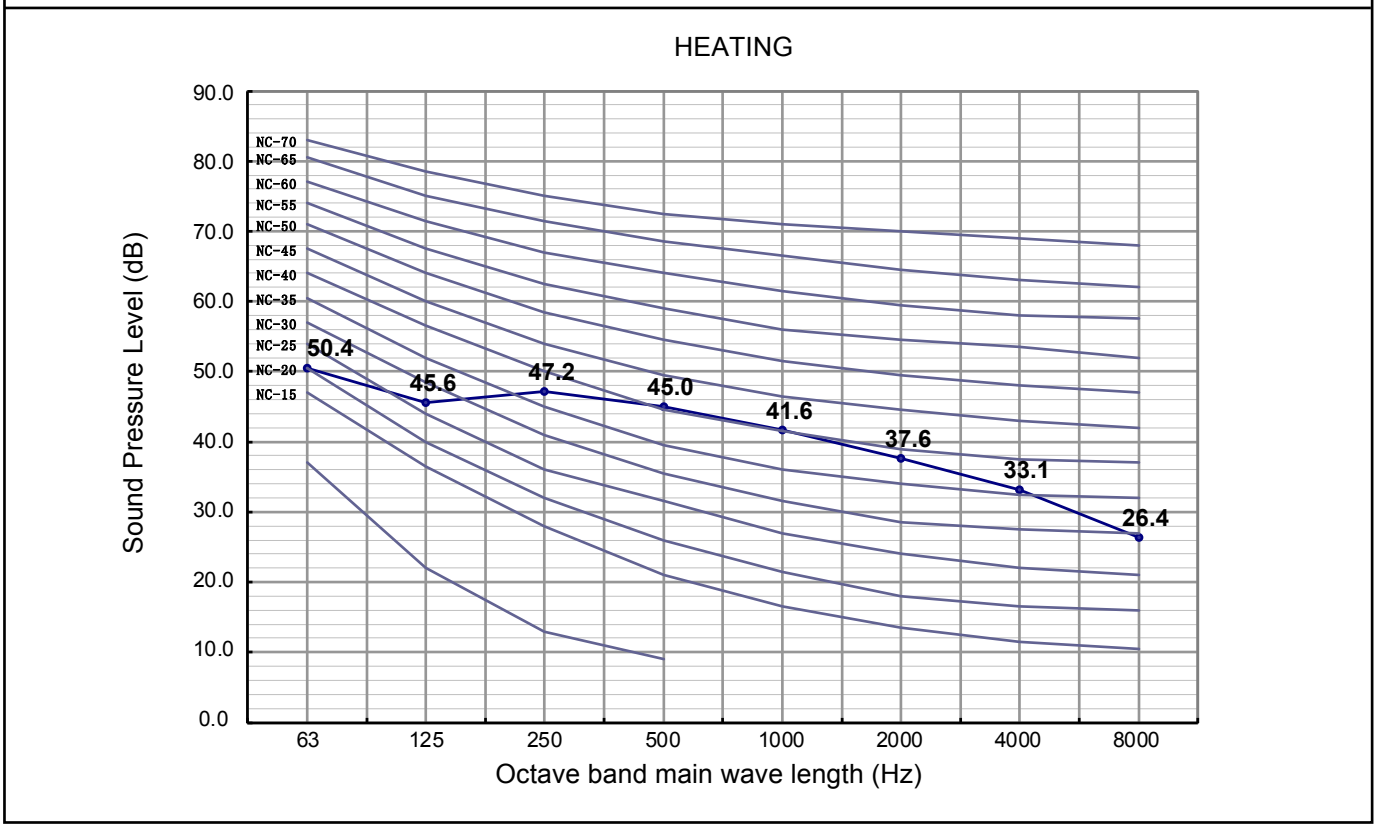

The Sound Pressure Level is based on the following conditions:

- *1 meter from the unit front surface and 1 meter from floor level*

The above data was measured in an anechoic chamber. Please take into consideration reflected sound of your specific site

4.2. RAC-35WSE

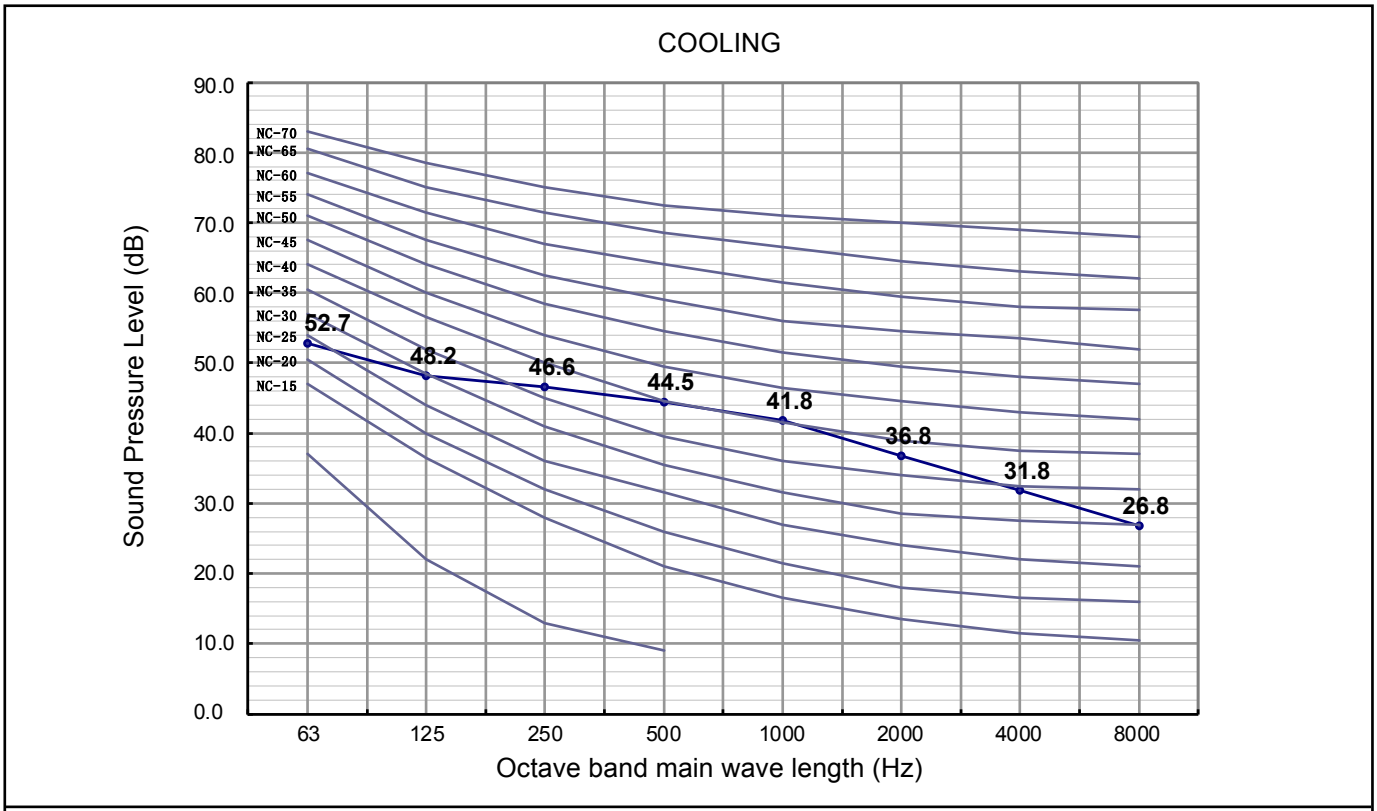

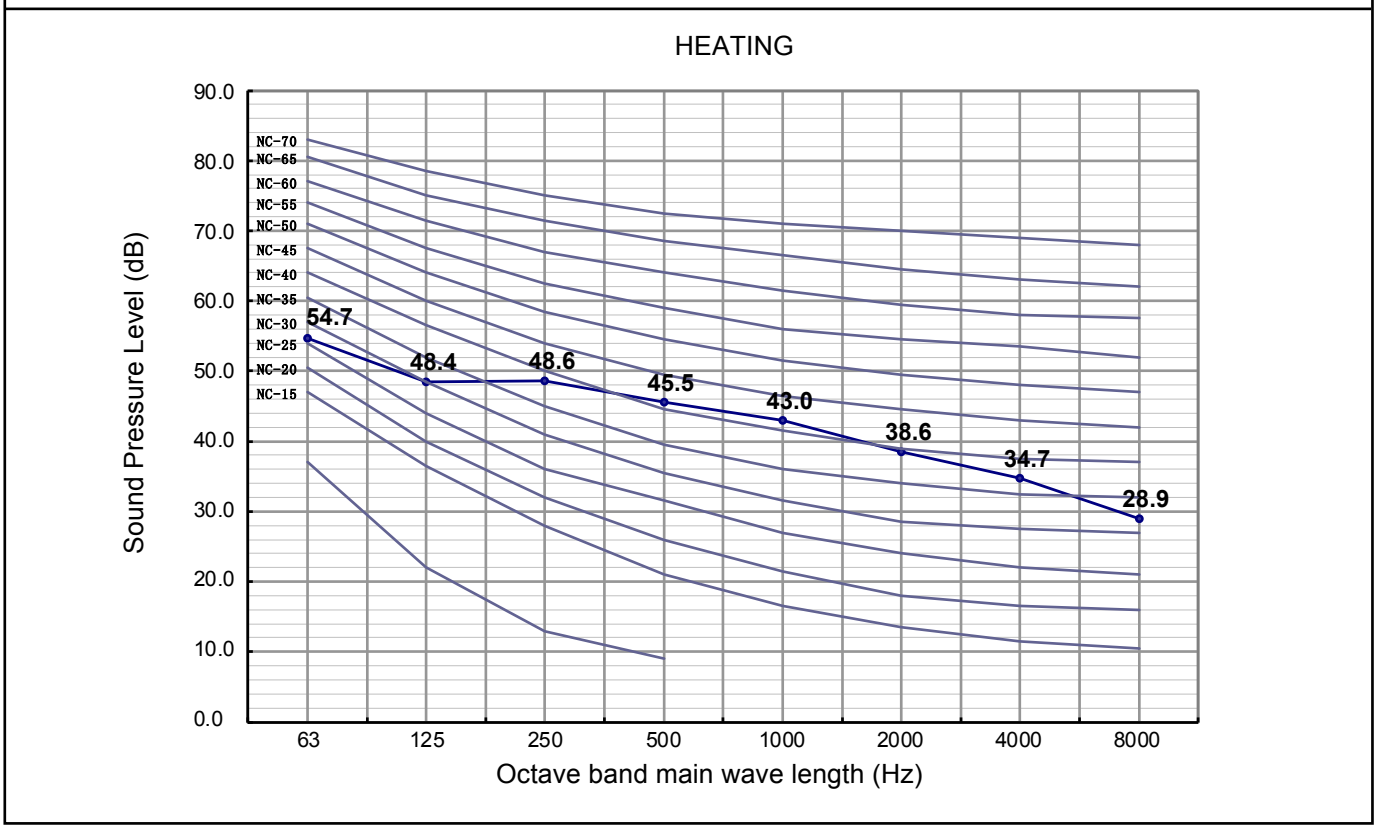

The Sound Pressure Level is based on the following conditions:

- *1 meter from the unit front surface and 1 meter from floor level*

The above data was measured in an anechoic chamber. Please take into consideration reflected sound of your specific site

4.3. RAC-50WSE

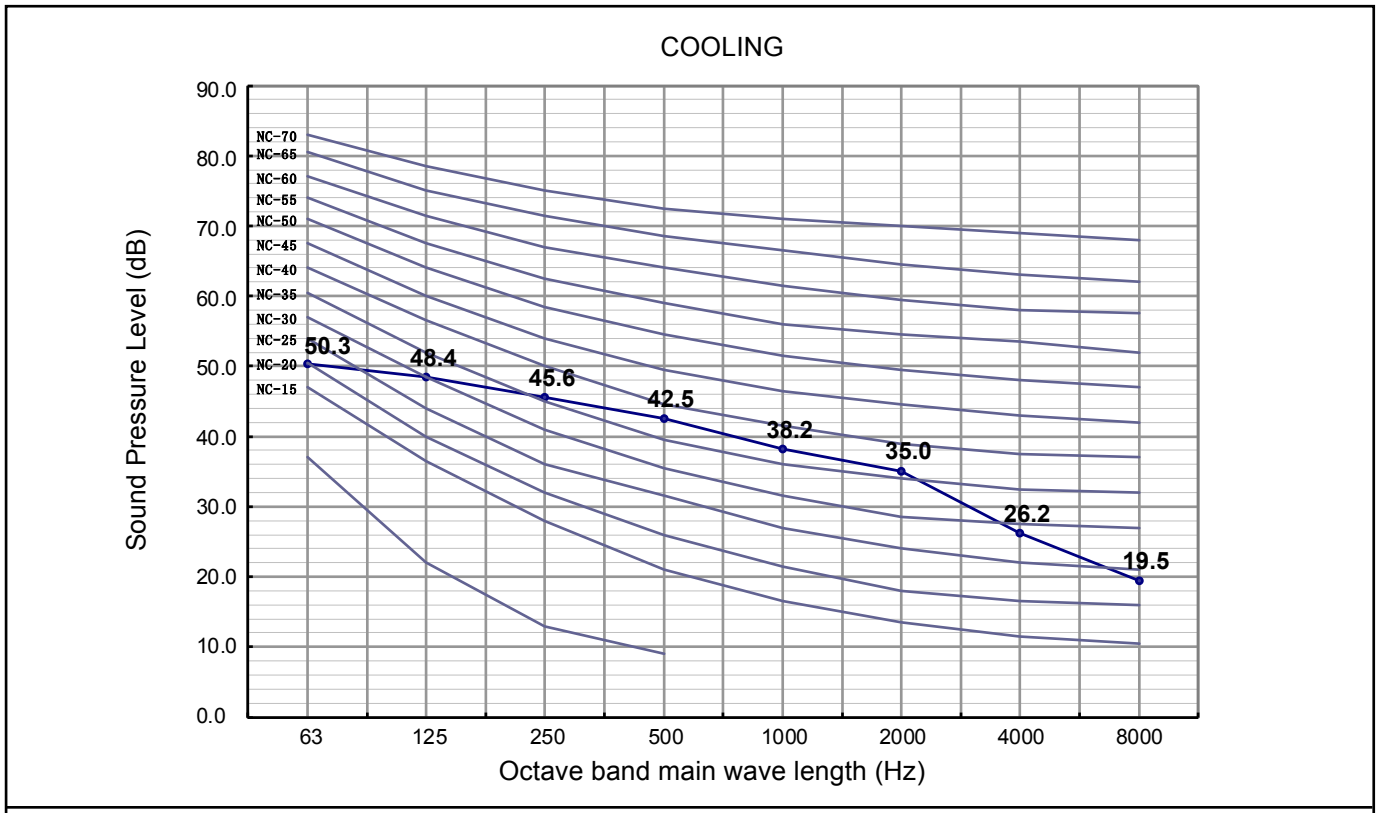

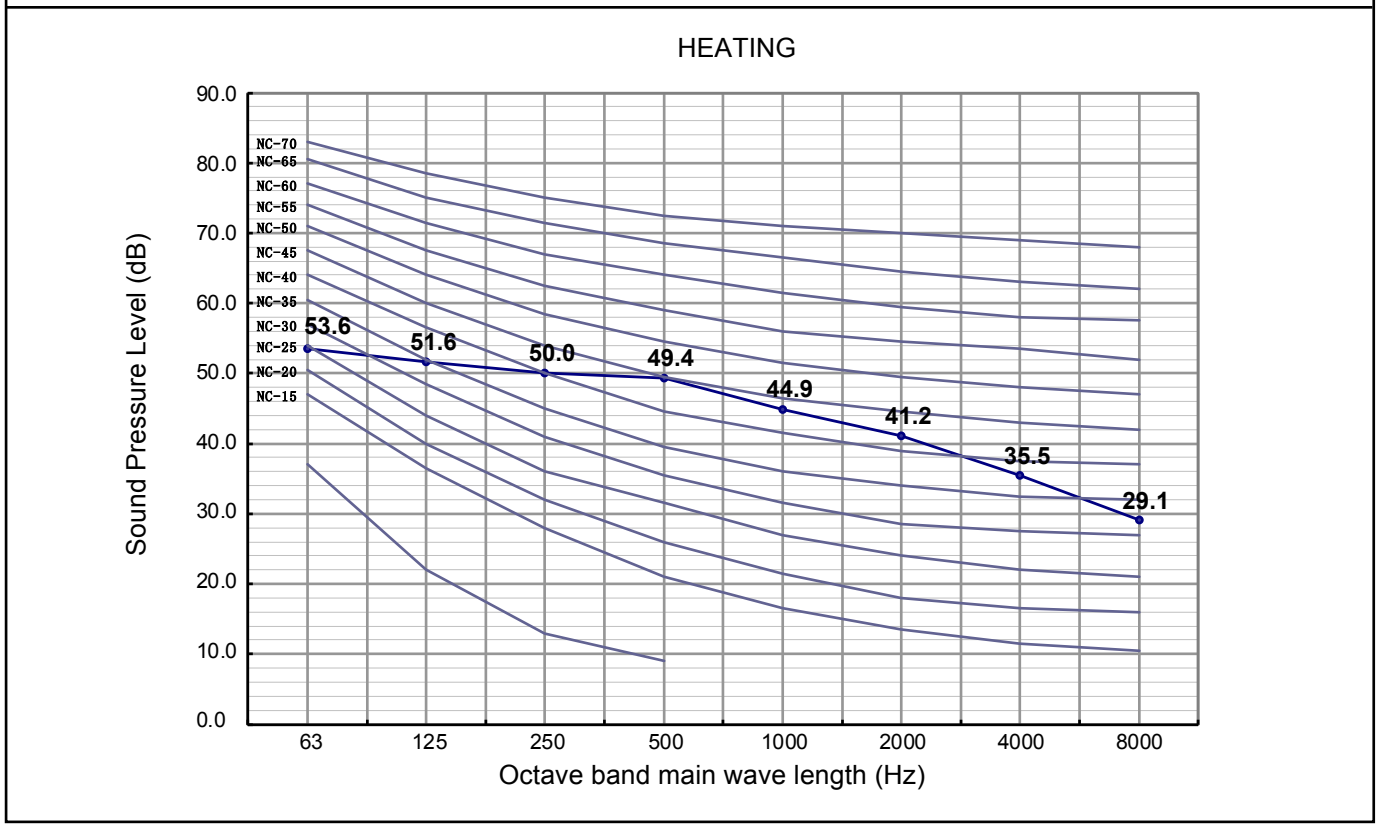

The Sound Pressure Level is based on the following conditions:

- *1 meter from the unit front surface and 1 meter from floor level*

The above data was measured in an anechoic chamber. Please take into consideration reflected sound of your specific site

5 WORKING RANGE

5.1. POWER SUPPLY

Working Voltage	207V ~ 253V
Voltage Imbalance	Within a 3% Deviation from Each Voltage at the Main Terminal of Outdoor Unit
Starting Voltage	Higher than 85% of the Rated Voltage

5.2. WORKING RANGE

Applicable models:

RAC-25WSE
RAC-35WSE
RAC-50WSE

The temperature range is indicated in the following table.

Cooling

working range	min (°C)	max (°C)	rated (°C)
outdoor	-10	43	35
indoor	16	43	27

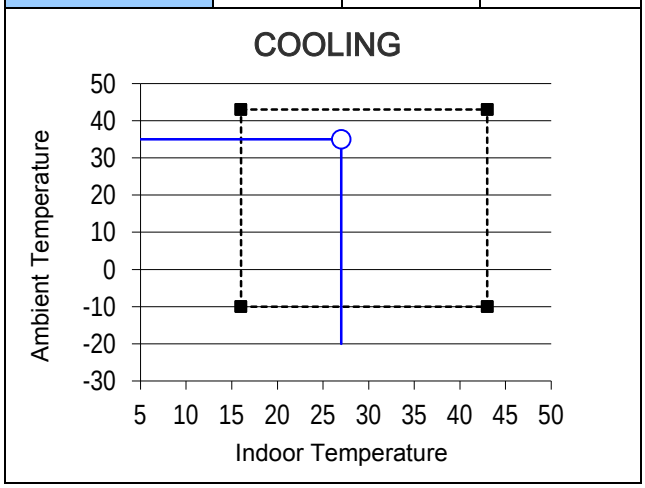

Heating

working range	min (°C)	max (°C)	rated (°C)
outdoor	-20	24	7
indoor	16	26	20

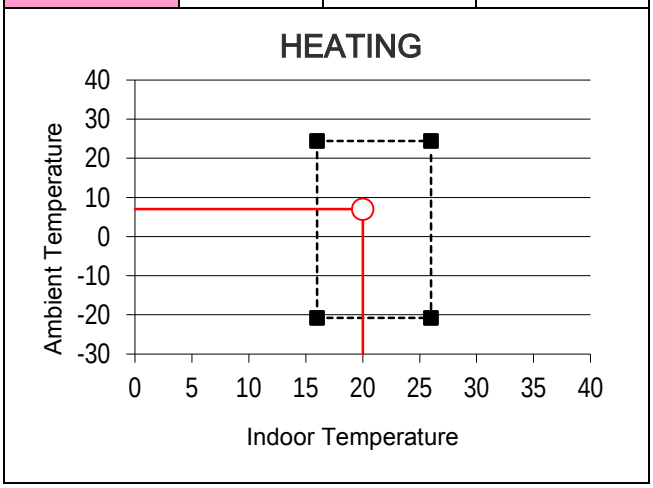

6 ELECTRICAL DATA

6.1. INDOOR UNIT

Model	Unit Main Power		Applicable Current		Indoor Fan Motor	
	VOL, PH, Hz	Fuse Rating (A)	STC	RNC	RNC	IPT
RAK-25PSEW RAK-25PSES	230,1，50	3.15	(C）2.26（H)2.85	(C）4.00（H)6.52	0.67	30
RAK-35PSEW RAK-35PSES	230,1，50	3.15	(C）3.56（H)3.65	(C）5.87（H)8.70	0.67	30
RAK-50PSEW RAK-50PSES	230,1，50	3.15	(C）6.33（H)7.38	(C）7.91（H)11.52	0.67	30

VOL: Rated Unit Power Supply Voltage (V)
Hz: Frequency (Hz)
STC: Starting Current (A)
RNC: Running Current (A)
PH: Phase (ϕ)
IPT: Input (W)

6.2. OUTDOOR UNIT

Model	Unit Main Power				Compressor Motor					
	VOL, PH, Hz	Fuse Rating (A)	Min (V)	Max (V)	Locked Rotor Ampere (A)	STC	Cooling Operation		Heating Operation	
							RNC	IPT	RNC	IPT
RAC-25WSE	230,1，50	15	207	253	-	2.85	4.00	490	6.52	621
RAC-35WSE	230,1，50	15	207	253	-	3.65	5.87	778	8.70	800
RAC-50WSE	230,1，50	25	207	253	-	7.38	7.91	1389	11.52	1622

VOL: Rated Unit Power Supply Voltage (V)
HZ: Frequency (Hz)
STC: Starting Current (A)
RNC: Running Current (A)
PH: Phase (ϕ)
IPT: Input (W)

NOTE:

1. *The above compressor data is based on 100% capacity combination of indoor units at the rated operating frequency*
2. *This data is based on the same conditions as the nominal heating and cooling capacities.*
3. *The compressor started by an inverter, resulting in extremely low starting current.*

7 WIRING DIAGRAM

7.1. RAK-25PSEW/35PSEW/50PSEW/25PSES/35PSES/50PSES

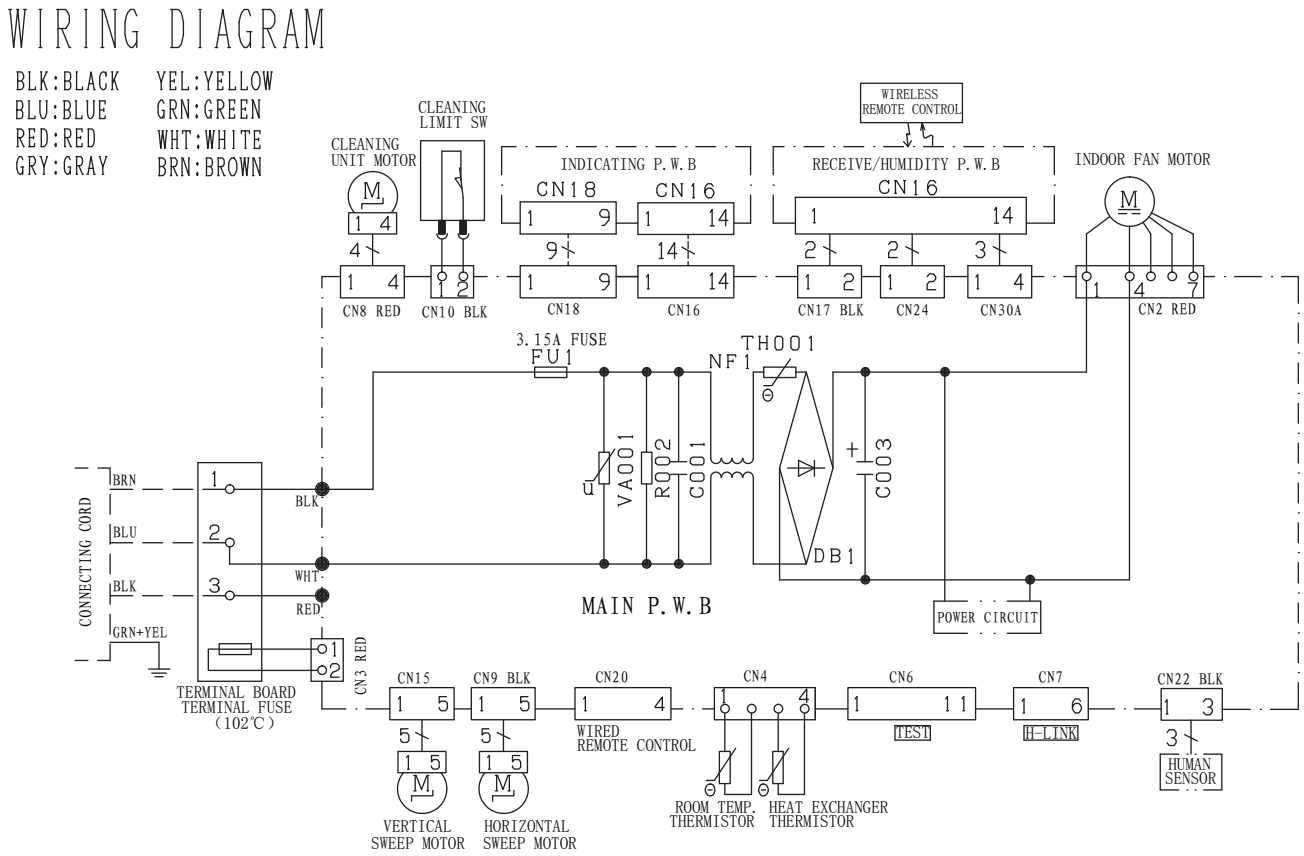

CAUTION! HIGH VOLTAGE	TURN OFF THE POWER SOURCE DURING THE SERVICE WORK.

※SOME CONNECTOR MAY NOT BE INSTALLED. PLEASE ACCORDING TO THE SPECIFIC OF ACTUAL MODELS

7.2. RAC-25WSE/35WSE

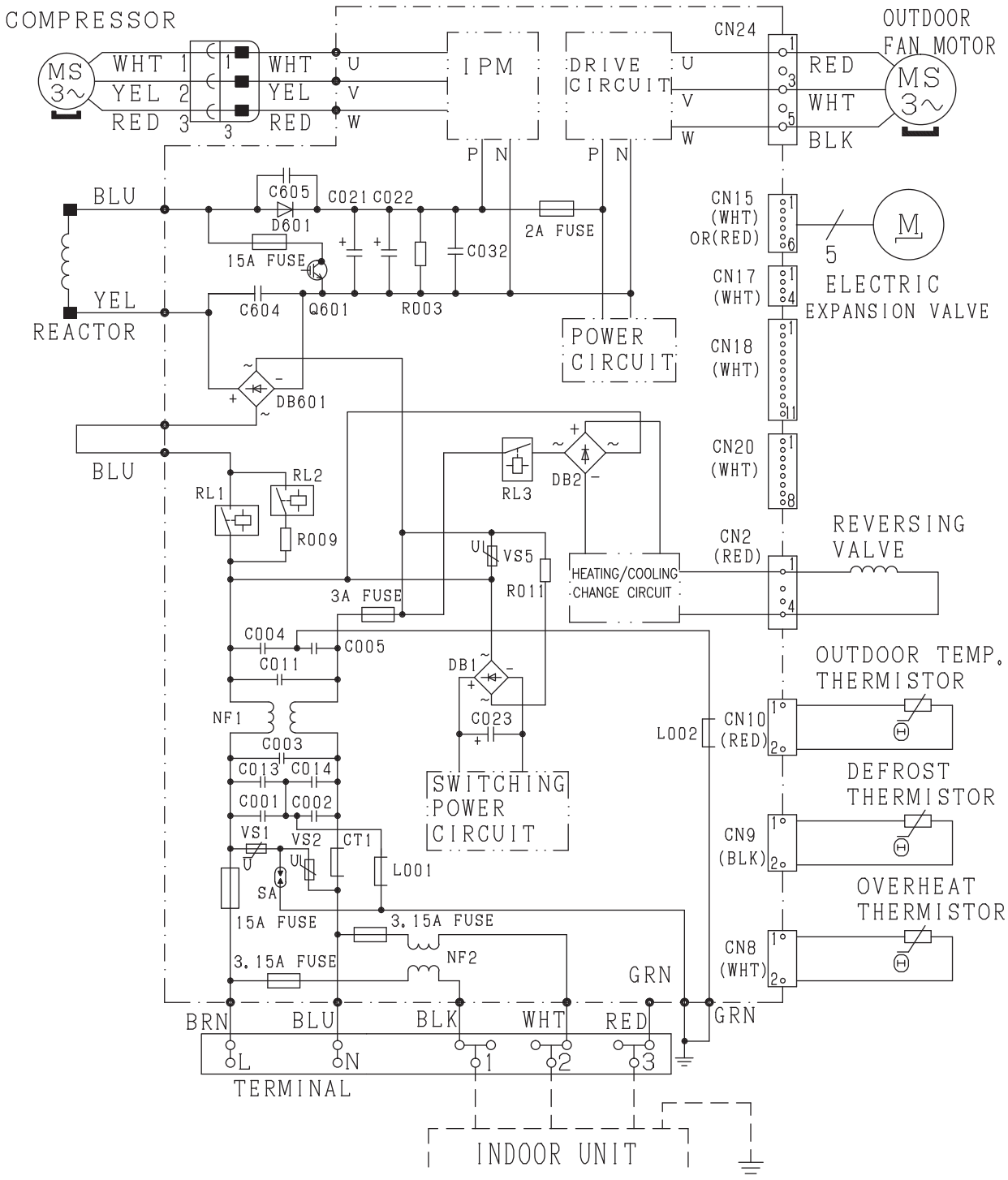

7.3. RAC-50WSE

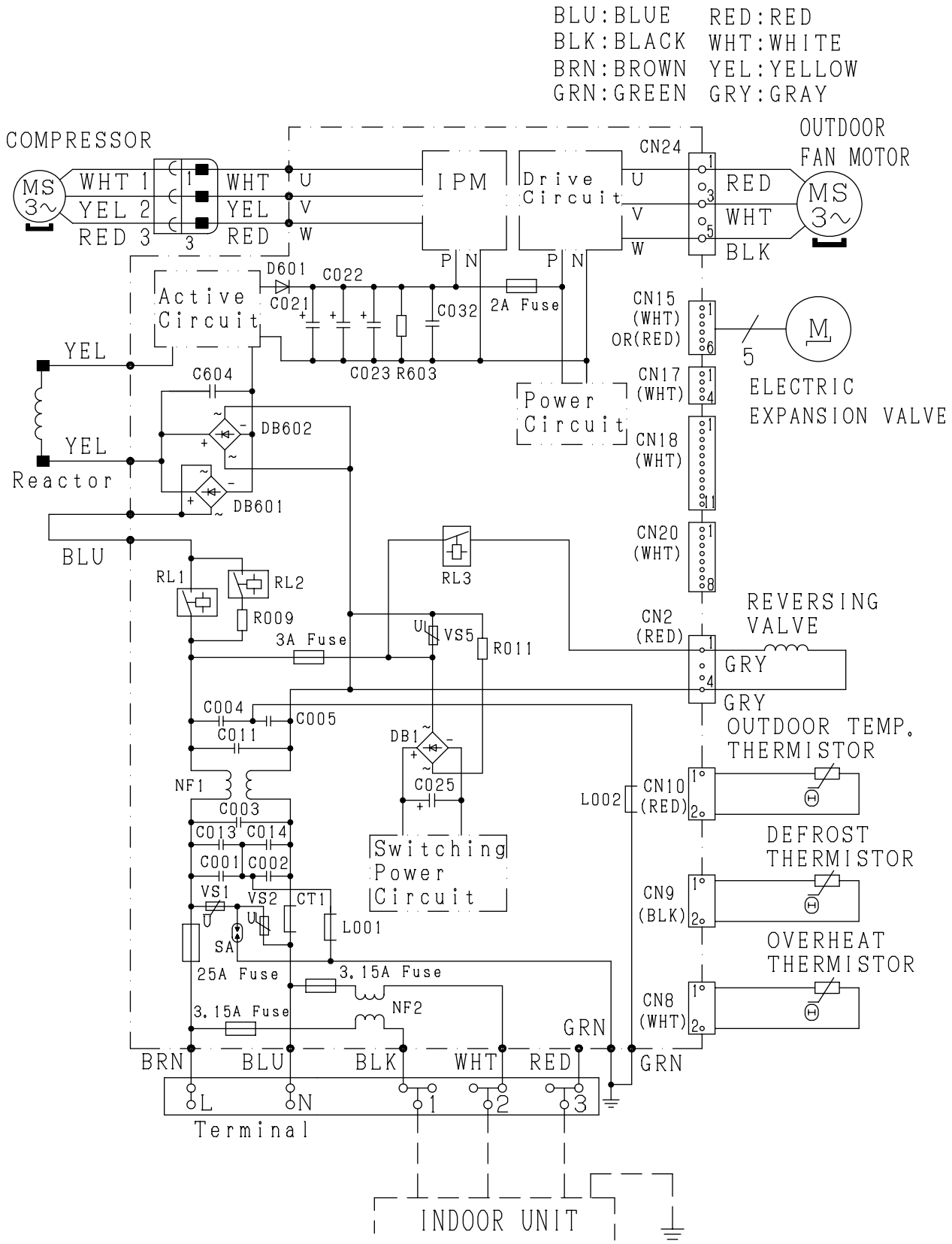
BLU:BLUE RED:RED
BLK:BLACK WHT:WHITE
BRN:BROWN YEL:YELLOW
GRN:GREEN GRY:GRAY
COMPRESSOR
MS 3~
WHT 1
YEL 2
RED 3
WHT
YEL
RED
U
V
W
IPM
Drive Circuit
CN24
OUTDOOR FAN MOTOR
RED
WHT
BLK
MS 3~
P N
D601
C022
C021
C032
2A Fuse
Active Circuit
CN15 (WHT) OR(RED)
M
5
ELECTRIC EXPANSION VALVE
YEL
C604
C023 R603
CN17 (WHT)
Power Circuit
DB602
CN18 (WHT)
YEL
Reactor
DB601
BLU
CN20 (WHT)
RL1
RL2
RL3
R009
3A Fuse
VS5
R011
CN2 (RED)
REVERSING VALVE
GRY
GRY
OUTDOOR TEMP. THERMISTOR
C004
C005
C011
DB1
C025
NF1
C003
L002
CN10 (RED)
C013 C014
C001 C002
Switching Power Circuit
DEFROST THERMISTOR
VS1 VS2 CT1
CN9 (BLK)
L001
SA
OVERHEAT THERMISTOR
25A Fuse
3.15A Fuse
3.15A Fuse
NF2
CN8 (WHT)
GRN
BRN BLU BLK WHT RED GRN
L N 1 2 3
Terminal
INDOOR UNIT

8 REFRIGERANT CYCLE

8.1. WALL TYPE: RAK-25PSEW/RAC-25WSE, RAK-35PSEW/RAC-35WSE RAK-25PSES/RAC-25WSE, RAK-35PSES/RAC-35WSE

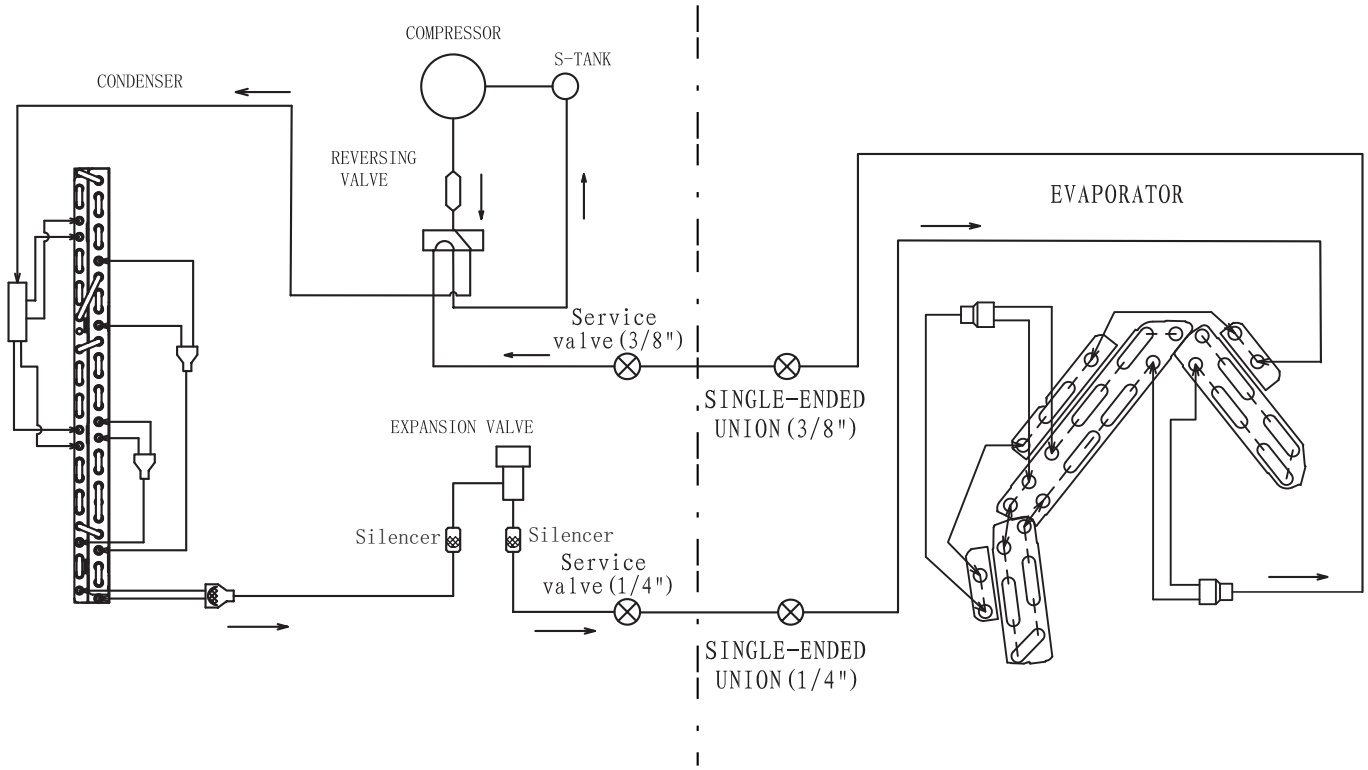

8.2. WALL TYPE: RAK-50PSEW / RAC-50WSE RAK-50PSES / RAC-50WSE

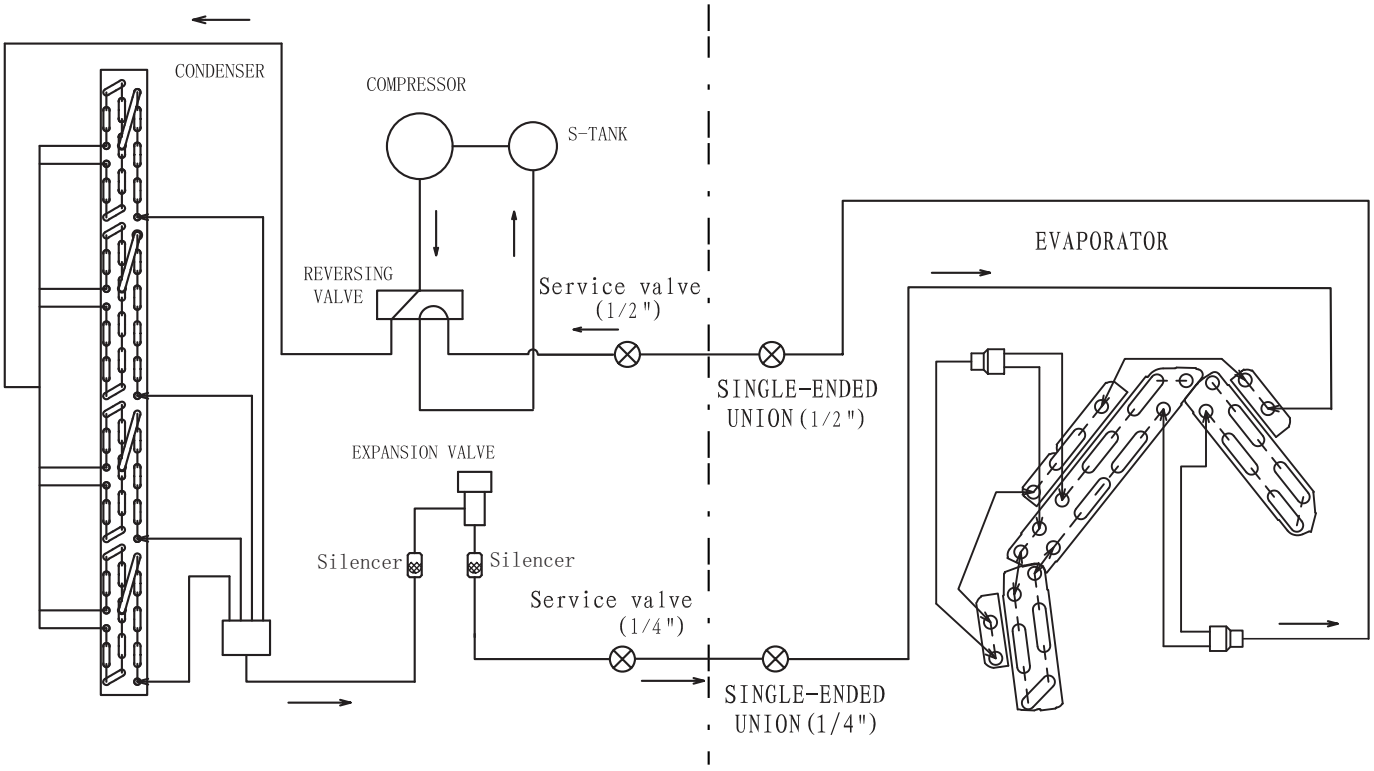

9 CONTROL AND FUNCTION

9.1. WIRELESS REMOTE CONTROL FUNCTION

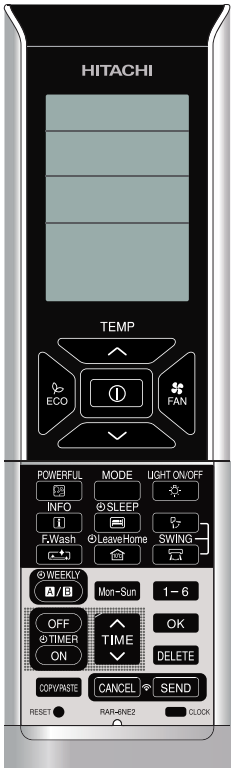

RAR-6NE2

BUTTONS	FUNCTION
MODE	**MODE selector Button** Use this button to select the operating mode. Every time you press this button, the mode will change from (AUTO) → (HEAT) → (DEHUMIDIFY) → (COOL) and → (FAN) → (FILTER CLEAN) cyclically.
FAN	**FAN SPEED Selector Button** This determines the fan speed. Every time you press this button, the airflow rate will change from (AUTO) → (HIGH) → (MED) → (LOW) → (SILENT) (This button allows selection of optimal or preferred fan speed for each operation mode).
	START/STOP button Press this button to start operation. Press it again to stop operation.
ECO	**ECO button** Use this button to set the ECO mode.
	POWERFUL button Use this button to set the POWERFUL mode.
	LIGHT ON/OFF Button Use this button to set the LIGHT ON/OFF mode.
	INFO button 1) Press this button to display temperature for 10 second 2) Press this button to check monthly power consumptio 3) Press this button to recieve the current calendar and cloc
	ECO SLEEP TIMER button Use this button to set the ECO sleep timer.
	AUTO SWING (Vertical) button Controls the angle of the horizontal air deflector.
	AUTO SWING (Horizontal) button Controls the angle of the vertical air deflector.
10°C	**LEAVE HOME button** Prevent the room temperature from falling too much by setting temperature 10°C~16°C when no one is at home.
	FROST WASH Button The dust and dirt adhering to indoor heat exchanger which is the cause of the smell. They are washed away by freezing and thawing of the heat exchanger.
WEEKLY TIMER buttons	
OFF TIMER ON	**ON/OFF TIMER button** The device will turn on (off) and off (on) at the designated time.
TIME	**TIME button** Press the button to set starting time of the program.
OK	**OK button** Press the button to save the program. The button shall be pressed everytime after finishing a program setting.
DELETE	**DELETE button** 1) Press the button to delete the selected progra 2) Press the button for about 10 seconds by directing the remote controller towards theindo unit while Mode A or B display blinks, programs for Mode A or B will be deletedboth from the indoor unit and the remote controller after the beep sound from the indoorunit.
Mon-Sun	**DAY button** Select the desired day of the week.
1 – 6	**PROGRAM NO. Button** Press this button to select a program number.
CANCEL	**CANCEL** 1) Press the button to cancel the current setting process on the scree 2) Press the button by directing the remote controller towards the indoor unit, hen weeklytim setting will be canceled from indoor unit after the beep sound from the indoor unit.The program setting remains in the remote controller.
SEND	**SEND button** Press the button for about 3 seconds by directing the remote controller towards the indoor unit after finishing the program setting. Timer lamp on the indoor unit will blink rapidly and after the beep soung from indoor unit, TIMER lamp will light up.
CLOCK	**CLOCK button** Press the button to set calendar and clock.
WEEKLY A/B	**WEEKLY TIMER MODE button** 1) Select Mode A or Mode B. 2 modes can be set and stored as a weekly time 2) By pressing the button longer than 3 seconds, program setting screen will appea

9.2. AUTO CHANGEOVER

COOLING/HEATING mode is decided by the room temperature.

A. COOLING/HEATING mode is decided during the **initial startup** of Automatic Operation
Initial startup of Automatic Operation means the following either condition:
- Unit start up in Automatic Operation
- Automatic Operation mode is pressed while the unit is running in manual mode

Startup room temperature	COOL / HEAT
>= Remote controller setting temperature	Unit runs in COOLING mode
< Remote controller setting temperature	Unit runs in HEATING mode

B. COOLING/HEATING mode is decided **in intervals after the initial startup** of Automatic Operation (also known as Auto Changeover function)

Intervals	Duration
1st interval	10 minutes
2nd interval	15 minutes
Subsequent interval	Every 55 minutes

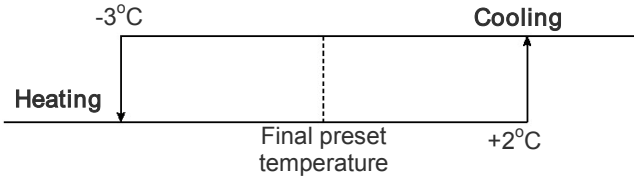

9.3. SHIFT VALUE

1. Press and hold (START/STOP) button and (ON) button.
2. Press [RESET] button on the same time. Release [RESET] button only, then release (START/STOP) and (ON) button once Screen 1 appears.

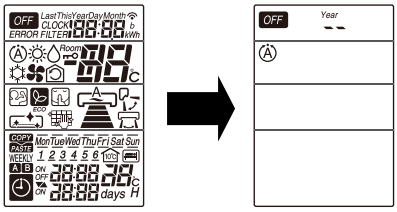

Screen 1 Screen 2

3. Press the (MODE) button to display fan mode (Screen 3).

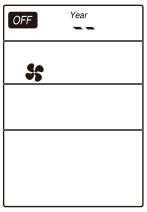

Screen 3

4. Press (START/STOP) and Screen 4 appear.

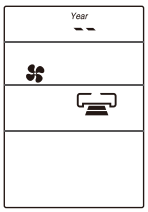

Screen 4

5. Select (FAN SPEED) button to choose Heating Shift or Cooling Shift Mode (Screen 5).

By setting fan speed to HIGH or MED , it will go to Cooling Shift mode.
By setting fan speed to LOW or SILENT , it will go to Heating Shift mode.

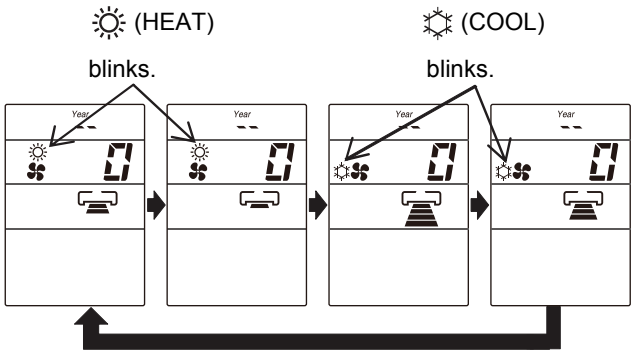

Screen 5

6. Press the Temperature button (or) to adjust the shift value.

Decrease 3 C from the initial shift value setting. | Decrease 2 C from the initial shift value setting. | Decrease 1 C from the initial shift value setting. | The initial shift value setting. | Increase 1 C from the initial shift value setting. | Increase 2 C from the initial shift value setting. | Increase 3 C from the initial shift value setting.

NOTE:
1. There are total of 7 shift values ranging from -3 to 3.
2. The displayed shift value, (HEAT) and (COOL) symbol on the remote controller display will be disappear after 10 seconds
3. The changed shift value will remain unchanged after turned off the power.
4. If “0” is displayed on the remote controller display, it indicates the shift value is now at the initial setting.

9.4. OPERATION LOCK

1. HEATING MODE

a) Press and hold ECO (ECO) and POWERFUL (POWERFUL) buttons, press RESET (RESET) button on the same time. Release RESET (RESET) button only when Screen 1 appear, then release ECO (ECO) button and POWERFUL (POWERFUL) button.

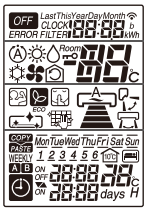

Screen 1

b) Wait until only Screen 2 appear.

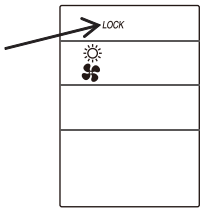

Screen 2

c) The heating mode operation is locked.

d) To unlock HEATING mode, repeat step (a). After all operations mode symbols displayed for 10 seconds, the operation mode symbol before cancellation will be display. The heating mode operation is unlocked.

2. COOLING AND DEHUMIDIFYING MODE

a) Press and hold ECO (ECO) and LIGHT ON/OFF (LIGHT ON/OFF) buttons for at least 5 seconds when the remote controller is OFF.

b) Wait until only and displayed on the screen. The cooling and dehumidifying modes operation is locked.

c) To unlock HEATING mode, repeat step (a). After all operations mode symbols displayed for 10 seconds, the operation mode symbol before cancellation will be display. The cooling and dehumidifying mode operation is unlocked.

9.5. SETTING THE PREVENTION OF MUTUAL INTERFERENCE

1. Please ensure the other indoor unit is OFF.
2. Press 1-6 (PROGRAM NO.) button, TIMER ON (ON TIMER) button and RESET (RESET) button simultaneously. The remote controller will display Screen 1 and followed by Screen 2. The indoor unit beeps to indicate that it has just received the signal from remote controller.

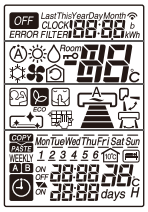

Screen 1

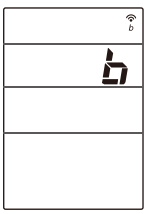

Screen 2

NOTE:
1. If indoor unit still not receive the correct signal from the correct remote controller, setting shall be made again. By setting again for the 2nd time, the signal address will change from B to A, then repeat again for the 3rd time.

9.6. INTERMITTENT FAN SPEED SETTING

The intermittent fan control during thermo off in Heating Mode can be changed by the remote controller.
(This procedure should be done only by service personnel.)
It is possible to select from 3 patterns.

PROCEDURE

1. Press [START/STOP] button, [Mon-Sun] button and press [RESET] button simultaneously. Release [RESET] button only and make sure that all marks on the remote controller display are indicated, then release [START/STOP] button and [Mon-Sun] button. Remote controller now enters "Intermittent Fan Control Change Mode".

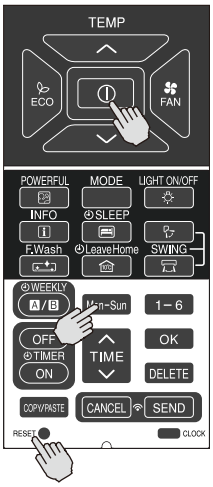

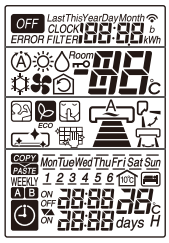

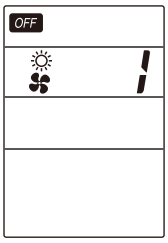

Default : Pattern 1

2. Press [ROOM TEMPERATURE setting] [∧(UP)]/[V(DOWN)] buttons.
(The intermittent pattern changed with indoor unit beep sound.)

Transmission sign lights up with beep from indoor unit simultaneously.

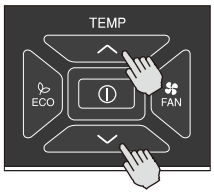

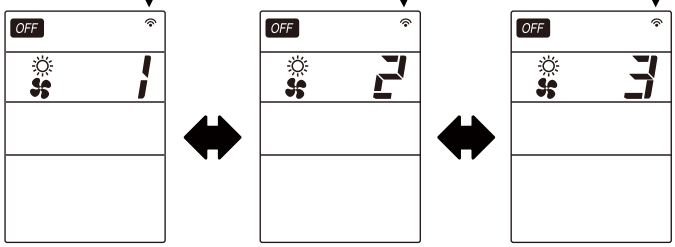

Pattern 1 Pattern 2 Pattern 3

	Pattern 1	Pattern 2	Pattern 3
Single Model	Continuous	30sec ON / 210sec OFF repeatedly	50sec ON / 190sec OFF repeatedly
Multi Model	30sec ON / 210sec OFF repeatedly	50sec ON / 190sec OFF repeatedly	Continuous

NOTE :
(1) The indication of the selected intermittent pattern will disappear after 10 seconds.
(2) The selected intermittent pattern will remain unchanged after the unit is turned off.

9.7. FAN SPEED SETTING IN THERMO OFF IN COOLING

The fan speed in Cooling Mode during thermo off can be changed by the remote controller.
(This procedure shall be implemented strictly by service personnel only.)
It is possible to return it to the default setting.

PROCEDURE

Press [POWERFUL] button and [TIME ∧(UP)] button simultaneously for about 5 seconds when the remote controller is OFF.

Transmission sign lights up with beep from indoor unit simultaneously.

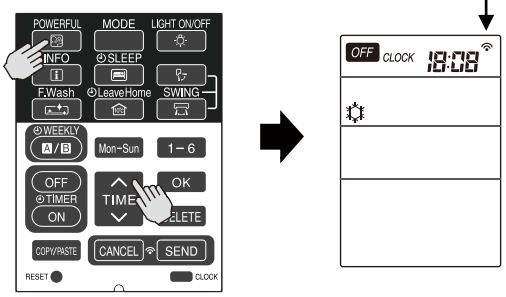

Beep sound pattern : 1) Default setting : Short beep
2) Changed setting : Double beep

	Fan speed during thermo off
Default Setting	Ultra low
Changed Setting	Set fan speed (When auto fan speed is set, the fan speed is low)

NOTE :
(1) The selected fan speed will remain unchanged after the unit is turned off.
(2) If Timer reservation has been set, it will be canceled.
(3) During time setting and timer setting, this operation cannot be set.

9.8 FROST WASH OPERATION

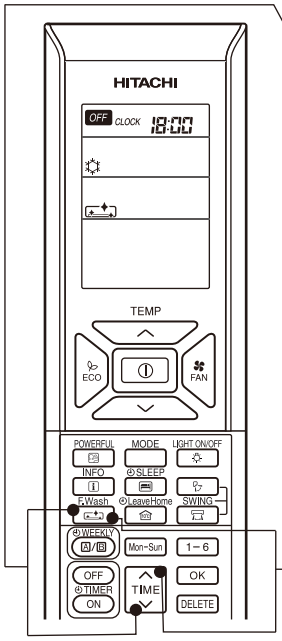

■ To cancel Frost Wash (Auto mode)

- This setting should be made only when the air conditioner is stopped.

1 At the time of the effective setting, while pressing and holding [TIME] (TIME) button, press [F.Wash] (Frost Wash) button on the same, Frost Wash (Auto mode) is canceled. " " disappears from the LCD.

- If Frost Wash function is not in use for a long period, it may not be possible to completely wash away the dust and dirt adhering to indoor heat exchanger. It will cause odor, so please conduct frequently Frost Wash function by using the remote controller.
- Recommended time of Frost Wash operation will be informed by " " lamp flash for 15 seconds upon air conditioner operation stop.

■ To start Frost Wash (Auto mode)

- This setting should be made only when the air conditioner is stopped.

2 At the time of the disabled setting, while pressing and holding [TIME] (TIME) button, press [F.Wash] (Frost Wash) button on the same, Frost Wash (Auto mode) is set. " " is displayed on the LCD.

■ The screen of the remote control

- At Frost Wash (Auto) reserved, " " is displayed on the LCD.
- At Frost Wash (Auto) not reserved, " " disappears from the LCD.

9.9 HOW TO PROHIBIT THE FILTER CLEANING OPERATION

- With the remote controller, you can deactivate the filter cleaning operation.
- This setting should be made only when the air conditioner is stopped.

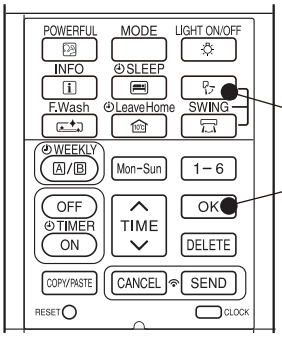

Press the [ ] (AUTO SWING VERTICAL) and [OK] (OK) buttons simultaneously for 5 seconds.
A double short beep sounds is emitted and the filter cleaning is deactivated.
To reactivate the filter cleaning, press the [ ] (AUTO SWING VERTICAL) and [OK] (OK) buttons simultaneously for 5 seconds, a single short beep sound is emitted and the setting returns the filter cleaning operation.

Filter cleaning operation (Default) (at the time of purchase)	→	Filter cleaning operation is prohibited
"Beep" sound	←	"Beep Beep" sound

9.10. ERROR CODE INFORMATION

1. In case failure occurs to the air conditioner, by pressing INFO (INFO) button, an error code will be displayed.
2. Direct the remote controller towards the receiver of indoor unit (within 2 meters in from of indoor unit) and press INFO (INFO) button.
3. Wait for 2 seconds for signal transmission and the error code will be displayed.

	TIMER LAMP BLINKING	LD301 BLINKING	CODE	MEANING
INDOOR	-	-	000 00	Normal
	1 time		001 00	Refrigerant cycle fault
	2 times	-	-	Outdoor unit is under forced operation
	3 times	9 times	003 00	Communication error between indoor and outdoor units
	9 times	-	009 00	Indoor thermistor
	10 times	-	010 00	Abnormal rotating numbers
	12 times	9 times	012 00	Communication error between indoor and outdoor units
	13 times	-	013 00	EEPROM data reading error
	18 times	-	018 00	Cleaning defective
	20 times	-	020 00	Human sensor defective
OUTDOOR	4 times	2 times	002 01	Peak current cut
	4 times	3 times	003 01	Compressor abnormal low speed rotation
	4 times	4 times	004 01	Compressor switching failure
	4 times	5 times	005 01	Overload lower limit cut
	4 times	6 times	006 01	OH thermistor temperature rise
	4 times	7 times	007 01	Abnormal outdoor thermistor
	4 times	9 times	009 01	Communication error
	4 times	10 times	010 01	Abnormal power source
	4 times	11 times	011 01	Fan stop for strong wind
	4 times	12 times	012 01	Fan motor fault
	4 times	13 times	013 01	EEPROM reading error
	4 times	14 times	014 01	Active converter defective
	4 times	15 times	015 01	Abnormal PWB circuit
	4 times	16 times	016 01	High load stop

9.11. ADDITIONAL FUNCTION VIA DIP-SWITCH SETTINGS

A new DIP Switch is available on the PWBs of the indoor unit that provide additional functions via the settings on the switches.

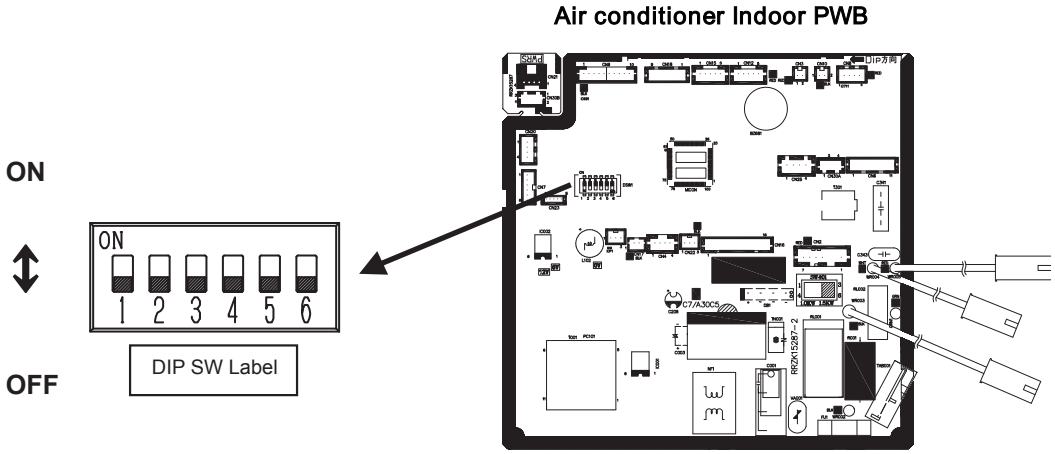

SW No.	I T E M	F U N C T I O N							
1	AUTO RESTART	OFF	ENABLE	ON	DISABLE				
2	CARD KEY MODE	OFF	DISABLE	ON	ENABLE				
3	CARD KEY LOGIC SELECT	OFF	INPUT HIGH ACTIVE	ON	INPUT LOW ACTIVE				
4	HEATING/COOLING ONLY MODE SELECT	OFF	HEATING & COOLING	OFF	HEATING ONLY	ON	COOLING ONLY	ON	HEATING & COOLING
5	HEATING/COOLING ONLY MODE SELECT	OFF	HEATING & COOLING	ON	HEATING ONLY	OFF	COOLING ONLY	ON	HEATING & COOLING
6	REMOCON ID SELECT	OFF	SELECT ID : A	ON	SELECT ID : B				

NOTE:

* Marking is position of shipping [FACTORY default setting]

9.11.1. AUTO RESTART FUNCTION

The AUTO RESTART function can be enabled or disabled by setting Pin No. 1 on the DIP SWITCH above to the ON or OFF position accordingly.

9.11.2. HEATING/COOLING ONLY MODEL SELECTION

When this function is enabled, the operation mode could be locked to either Heating Only (Heating or Fan) or Cooling Only (Cooling, Fan or Dehumidifying) by setting the Pin No. 4 and 5 accordingly.

LOCKED MODE	REMARKS
HEATING ONLY	Unit will not enter into Cooling mode although cooling mode is selected using the remote controller.
COOLING ONLY	Unit will not enter into Heating mode although heating mode is selected using the remote controller.

10 OPTION LIST

10.1. WIRED REMOTE CONTROL – SPX-RCDB

RAR-5G2 (SPX-RCDB)

BUTTONS	FUNCTION
	MODE Selector Use this button to select the operationg mode. Every time you press this button, the mode will change from (AUTO) → (HEAT) → (DEHUMIDIFY) → (COOL) and → (FAN) cyclically.
FAN	**FAN SPEED Selector Button** This determines the fan speed. Every time you press this button, the airflow rate will change from (AUTO) → (HIGH) → (MED) → (LOW) → (SILENT) (This button allows selection of optimal or preferred fan speed for each operation mode).
	ON/OFF button Press this button to start operation. Press it again to stop operation.
	SLEEP button Use this button to set the SLEEP timer.
SET	**SET button** Timer setting reservation.
OFF	**OFF button** Select the turn OFF timer.
ON	**ON button** Select the turn ON timer.
CANCEL	**CANCEL button** Cancel timer reservation.
	AUTO SWING (Vertical) button Controls the angle of the horizontal air deflector.
	ROOM TEMPERATURE setting button Value will change quicke when keep pressing.

10.1.1. SHIFT VALUE

1. Press and hold (ON/OFF) button and (ON TIMER) button at the same time while giving a single press on the RESET button until remote controller now enter 'Shift value change mode'.
2. Press (ON/OFF) button so that the display indicates (FAN) speed.
3. Select (FAN SPEED) button to choose Heating Shift or Cooling Shift Mode.

   By setting fan speed to HIGH or MED , it will go to Cooling Shift mode.
   By setting fan speed to LOW or SILENT , it will go to Heating Shift mode.

4. Press (ROOM TEMPERATURE) button to change the shift value (-3°C ~ 0 ~ 3°C).
5. Press (ON/OFF) button to end 'Shift value setting mode'.

NOTE:
1. There are total of 7 shift values ranging from -3 to 3.
2. The changed shift value will remain unchanged after turned off the power.

10.1.2. ERROR CODE INFORMATION

1. In case failure occurs to the air conditioner, the error code will constantly appear on the wired remote controller display.

	TIMER LAMP BLINKING	LD301 BLINKING	CODE	MEANING
INDOOR	-	-	-	Normal
	1 time		01	Refrigerant cycle fault
	2 times	-	-	Outdoor unit is under forced operation
	3 times	9 times	03	Communication error between indoor and outdoor units
	9 times	-	09	Indoor thermistor
	10 times	-	10	Abnormal rotating numbers
	12 times	-	12	Communication error between indoor and outdoor units
	13 times	-	13	EEPROM data reading error
	18 times	-	18	Cleaning defective
	20 times	-	20	Human sensor defective
OUTDOOR	4 times	2 times	01	Peak current cut
	4 times	3 times	01	Compressor abnormal low speed rotation

	TIMER LAMP BLINKING	LD301 BLINKING	CODE	MEANING
OUTDOOR	4 times	4 times	04	Compressor switching failure
	4 times	5 times	05	Overload lower limit cut
	4 times	6 times	06	OH thermistor temperature rise
	4 times	7 times	07	Abnormal outdoor thermistor
	4 times	9 times	09	Communication error
	4 times	10 times	10	Abnormal power source
	4 times	11 times	11	Fan stop for strong wind
	4 times	12 times	12	Fan motor fault
	4 times	13 times	13	EEPROM reading error
	4 times	14 times	14	Active converter defective
	4 times	15 times	15	Abnormal PWB circuit
	4 times	16 times	16	High load stop

10.2. H-LINK ADAPTOR – PSC 6RAD

10.2.1. SAFETY SUMMARY

DANGER:

– *DO NOT pour water into the remote control switch (hereafter called "controller"). This product is equipped with electrical parts. This will cause serious electrical shock.*

WARNING:

– *DO NOT perform installation work and electrical wiring connection by yourself. Contact your distributor or dealer of HITACHI and ask then for installation work and electrical wiring by service person. The specified cable should be used to connect (i) room air conditioner and adaptor, and (ii) controller and adaptor.*

CAUTION:

– *DO NOT install the indoor unit, outdoor unit, controller and cable as such places as:*
  – *where there is oil vapor and dispersion of oil*
  – *where there is sulfuric environment (near the hot springs)*
  – *where there is a flammable gas*
  – *where there is salty environment (near the sea)*

– *DO NOT install the indoor unit, outdoor unit, controller and cable within approximately 3 meters from strong electromagnetic wave radiators, such as medical equipment. In case that the controller is installed in a place where there is electromagnetic wave direct-radiation, shield the controller and cables by covering with the steel box and running the cable through the metal conduit tube.*

– *In case that there is electric noise at the power source for the indoor unit, provide a noise filter.*

10.2.2. INSTALLATION WORK

■ **Before installation**

Check the contents and the number of the accessories in the packing.

Adaptor	 With two 1.8m cables
1 piece of cover for hiding the covering	Attached 2 sided tapes 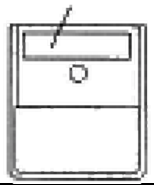
Two-sided tape for attaching to Adaptor	 110x40x3mm
2 connectors for H-Link connection	
2 tapping screws for attaching to wall	 ϕ3.0 x 10mm
2 screws for attaching to wooden wall	 ϕ3.1 x 16mm

1) RAC adaptor can be installed to the wall as well as on the air conditioner itself
2) Install RAC adaptor in the vertical surface as shown below.

Upper side

Mark " ⇧ UP"

Wiring outlet

Bottom side

3) Installation procedure
   a) When installing to the wall.
      i) Fix the adaptor with 2 screws. Tapping screw is for metal surface, and other screw is for wooden surface.

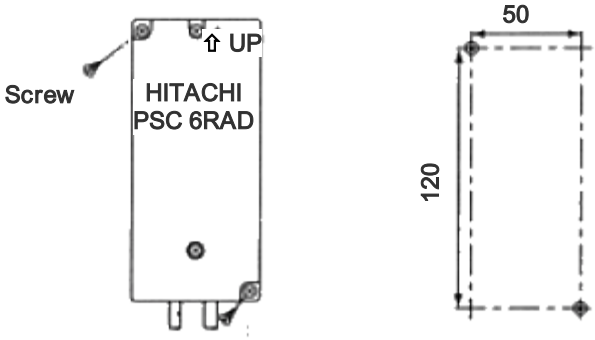

      ii) When using the cover
      It can be installed at the right and left side of room air conditioner. Fix the cover and RAC adaptor with the two-sided tape (accessory).

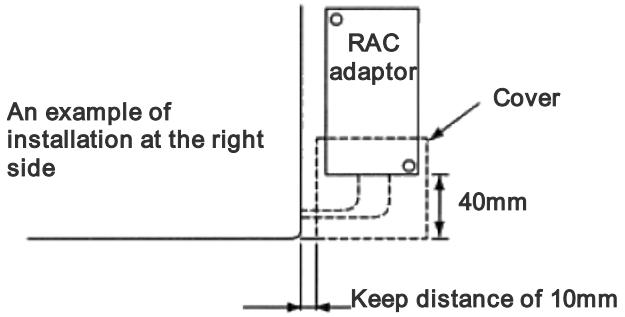

b) When installing on the room air-conditioner
In case that it cannot be installed to the wall due to the space or material problem, install the RAC adaptor with the two-sided tape (accessory) on the room air-conditioner.
   i) Confirm if the piping cover of the unit can be removed when performing the service maintenance, and then fix the RAC adaptor in the side of room air-conditioner with two-sided tape. (Available at the right as well as left side)
   ii) Clean the surface to be installed with a dry cloth.

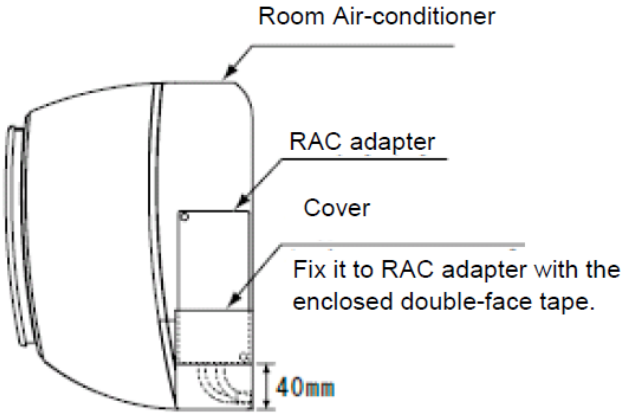

NOTE:

- *Consider the following points since the adhesiveness changes according to the environmental conditions (temperature, humidity etc)*
- *The adhesiveness is decreased when there is humidity or oil.*
- *Warm the adhesive part and installation place of the two-sided tape to avoid the decrease of the adhesiveness in case the ambient temperature is low.*
- *DO NOT touch the adhesive part by fingers nor re-attach it many times. The adhesiveness has decreased and the RAC adaptor may fall off.*
- *DO NOT apply any force within 24 hours after installation.*

10.2.3. ELECTRICAL WIRING

■ System configuration

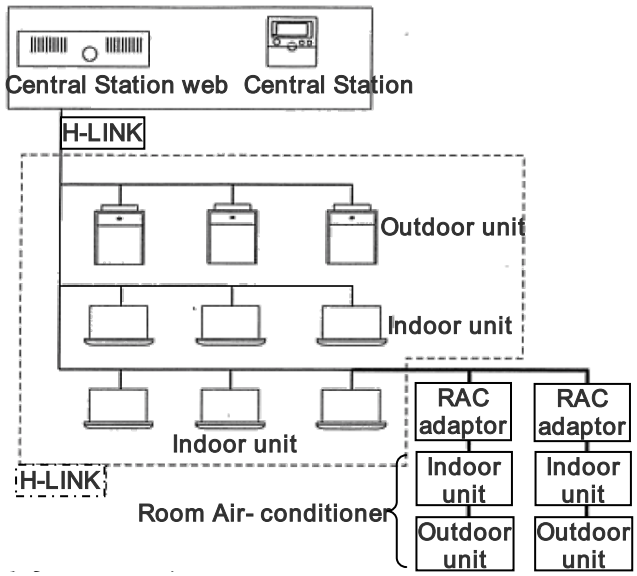

CAUTION:

- *Turn OFF the power supply of the room air-conditioner of the central control device when performing the wiring work*
- *DO NOT run all the H-LINK cable or power supply cable along the other signal cable, or malfunction may occur due to the noise, etc. If it is required to run along the other transmission cable, separate the cable more than 30cm, or run the cable through the metal tube and earth the tube.*
- *Follow local codes and regulations when performing electrical wiring and earth wiring.*
- *Transmissions cable used in H-LINK shall be 2 cores cable (0.7mm^2 to 1.25mm^2 for model: VCTF, VCT, CVV, MVVX, CVVX, VVR, VVF) or 2 cores twisted pair cable (model: KPEV, KPEV-Spec). Total length of cable shall be below 1000mm.*
- *DO NOT use wire with more than 3 cores.*

■ Internal components and Wiring connections

Check the contents and the number of the accessories in the packing.

- Access
  Open the cover by removing the ① and ② screws.

- Wiring Connection
  Connection with Room Air-Conditioner
  i) Remove the front cover of the room air-conditioner and the cover of electrical box.
  ii) The cable attached with the connector of the RAC adaptor shall be connected with the connector of indoor PCB

iii) Install the electrical box cover paying attention not to clamp the cable. Read the installation manual of each room air-conditioner for confirming how to connect and how to assemble the cable of the RAC adaptor.

CAUTION:
- *Disconnect the power plug before performing this work*
- *Turn OFF the break power source in case the power is supplied from the outdoor unit.*

- Connection of Transmission Cable

H-LINK transmission cable connecting to RAC adaptor shall be connected to H-LINK.

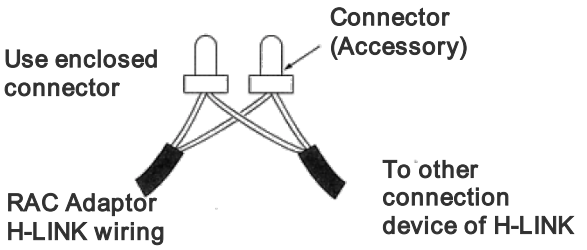

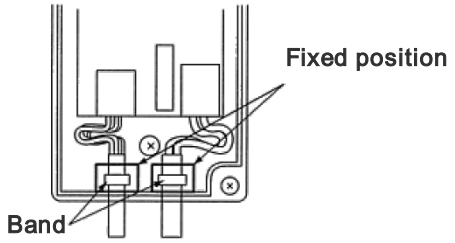

CAUTION:
- *DO NOT connect incorrect wiring. It may cause the failure of the RAC Adaptor. Especially pay attention not to apply high voltage e.g. AC400/230V.*
- *DO NOT perform the wiring work while power to the central station or the RAC Adaptor is still being supplied. It may cause malfunction. Turn OFF devices when performing the wiring work.*
- *The RAC Adaptor side cable should not overload to the connector.*
- *DO NOT clamp the cable when attaching the RAC adaptor cover.*
- *Band should not be loose and in fixed position.*

10.2.4. DIP SWITCH SETTING

1) Switch OFF the power of room air conditioner before setting the DIP switch. If the power is ON, the settings are INVALID.
2) The position of the DIP switch is shown below.

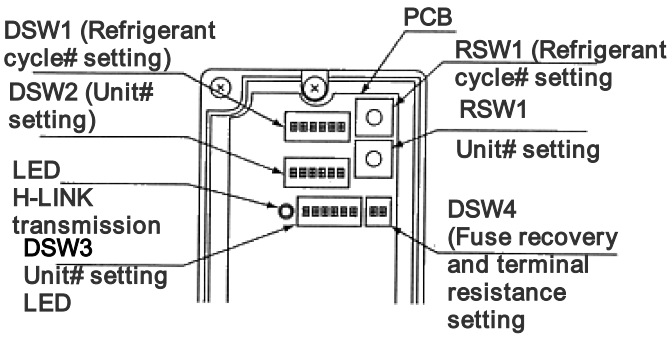

CAUTION:
- *DO NOT turn ON various pins of DSW1 and DSW2*

3) Set the refrigerant cycle# by RSW1 and DSW1

DSW1 (Ten digit)	RSW1 (Last digit)
	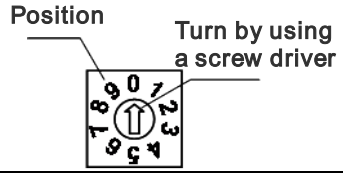
DSW1 and RSW1 are set “0” before shipment. Up to 15 cycles can be set.	
E.g. Setting in Ref No. 5 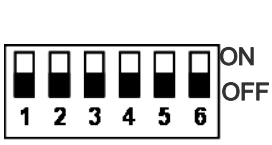 No. 1 pin is OFF	 The position is Set 5

4) Set the unit No. by RSW2 and DSW2

DSW2 (Ten digit)	RSW2 (Last digit)
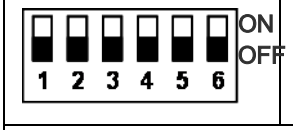	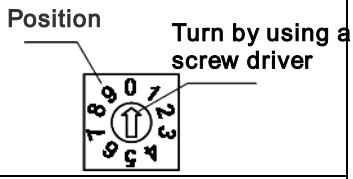
DSW2 and RSW3 are set “0” before shipment. Up to 15 cycles can be set.	
E.g. Setting in Unit No. 15 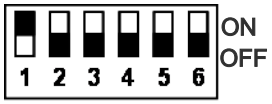 No. 1 pin is OFF	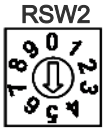 The position is Set 5

5) Slave unit.

In case of setting various RAC adaptors in the same refrigerant cycle, set the RAC adaptor with smallest Unit# as a master unit. In case of setting only one RAC adaptor in a refrigerant system, this adaptor should be a master unit. Set this procedure by DSW3.

Master Unit setting	Setting before shipping (slave unit setting)
ON ↑ 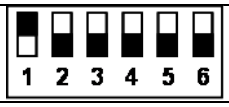	ON ↑ 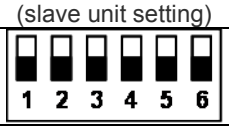

●: Master Unit setting

○: Setting before Shipping (Slave Unit setting)

Indoor Unit#

Refrigerant Unit#

	0	1	2	3	4	5	6	7		
0	●	○	○	○	○					
1			●	○	○					
2				●	○	○	○	○		
3		●								
4										

CAUTION:

– *DO NOT set various main adaptors in the same refrigerant cycle.*

6) Procedure when applying 200V voltage to H-LINK wiring incorrectly.

In case of applying 200V voltage to H-LINK wiring incorrectly, the fuse installed in a transmission circuit on PCB will blow out. In this case, reconnect the wiring correctly and turn ON No. 2 pin of DSW4 on PCB. The transmission circuit can be recovered. (If applying this error again, the transmission circuit can not be recovered)

PCB

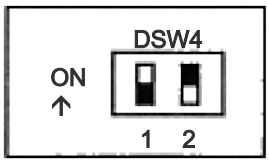

Turn ON No.2 pin of DSW4

7) Terminating resistance is set in whole H-LINK system.
   a) If H-LINK connecting devices like package air-conditioner are connected besides the RAC Adaptor, set the terminating resistance by those connecting devices. The terminating resistance should be set ON in only one position in whole H-LINK system.
   b) In case that H-LINK is connected only by the RAC adaptor, set the terminating resistance by the RAC adaptor. The terminating resistance should be set ON in only one position in whole H-LINK system.

PCB

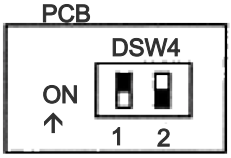

Turn ON No.1 pin of DSW4

10.2.5. TEST RUN

Test run should be performed in the following after finishing the installation, wiring and setting. Refer to the installation manuals enclosed with the control system equipment.

1) Confirmation of RAC Adaptor Connection
   Confirm if the RAC adaptor connection is recognized in the control system equipments. In case that it is not confirmed, check the transmission cable, refrigerant cycle #, indoor unit #, terminal resistance setting etc.
2) Registration
   Confirm if the RAC adaptor connection is recognized.
3) Confirmation of RUN/STOP Operation.
   Confirm if the room air-conditioner operate correctly by RUN/STOP from the central control system equipments. Check also if the room air-conditioner operation changes correctly by each setting.

10.3. DRY CONTACT (SPX-WDC3) APPLICATION (USING DIP SWITCH)

The dry contact system enables the operation of the air conditioner indoor unit to be controlled by using external dry contacts (with non voltage) such as card-key controller or window for facilities such as hotels.

Optional Connecting cord Accessory SPX-WDC3

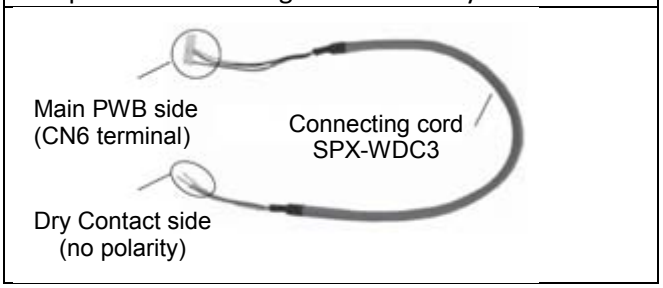

Note:

1) AUTO RESTART function set to "Enable" is needed (set pin#1 on the DIP SWITCH SW501 above to OFF position).
2) DRY CONTACT function is "Enable" by set pin No. 2 of the DIP SWITCH (DSW1) to ON position.
3) Select the proper setting for DRY CONTACT LOGIC INPUT pin No. 3 on DIP SWITCH (DSW1)
   i) Set to OFF position (Hi Input) if the type of Dry Contact switch to be used (for the CARD KEY UNIT or Window) is of contact type a (Normally Open Type) as shown in below diagram.
   ii) Set to ON position (Lo Input) if the type of Dry contact switch to be used (for the CARD KEY UNIT or Window) is of contact type b (Normally Close Type) as shown in below diagram.

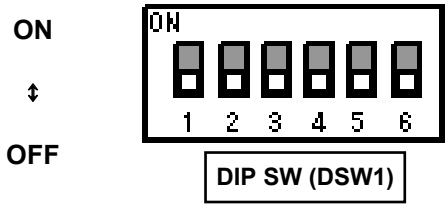

Pin No.	Function	Switch Position / Setting			
2	DRY CONTACT function	OFF	Disable	ON	Enable
3	DRY CONTACT Input Logic	OFF	HI Input Active	ON	LO Input Active

- Please decide the type of dry contact you will be using and set the position of the DIP Switch No. 2 and 3 accordingly

[1] CHECK DRY CONTACT OF CARD KEY UNIT

	AIR CONDITIONER Standby	AIR CONDITIONER Operating
CARD KEY (Door Switch)	REMOVE	INSERT
Contact type a	OPEN	CLOSE
Contact type b	CLOSE	OPEN

[2] SET THE POSITION OF DIP SWITCH

POSITION CONDITION OF DIP SWITCH
INITIAL CONDITION (CARD KEY NO USE) — No.2 : OFF, No.3 : OFF
HI Input Active — No.2 : ON, No.3 : OFF
LO Input Active — No.2 : ON, No.3 : ON

After all connection has been done as below diagram, ON the breaker and push ON button of wireless remote controller or wired remote controller to operate the air conditioner unit.

- When the CARD KEY is in insert condition, the air conditioner operation is allowable by remote controller.
- When the dry contact switch on the Card Key Unit is open (refer to diagram below for contact type a), the unit stops to operate (it takes 10 seconds to stop the unit operation after the dry contact switch on the card key turns off) and vice versa.
- When the card key is removed from the Card Key Unit, the wireless remote controller cannot be used.
- When the card key is removed from the Card Key Unit, the wired remote controller LCD display is activated; however it has no control over the unit.
- The suitable accessory Connecting Cord (accessory code#: SPX-WDC3) need to be used to connect the Card Key Unit's dry contact switch to the connector on the control board of the indoor unit. Please refer to Table 1 to select suitable accessory code# for the concerning indoor model.

Example of wiring connection to Card Key Unit will be as below (reference only)

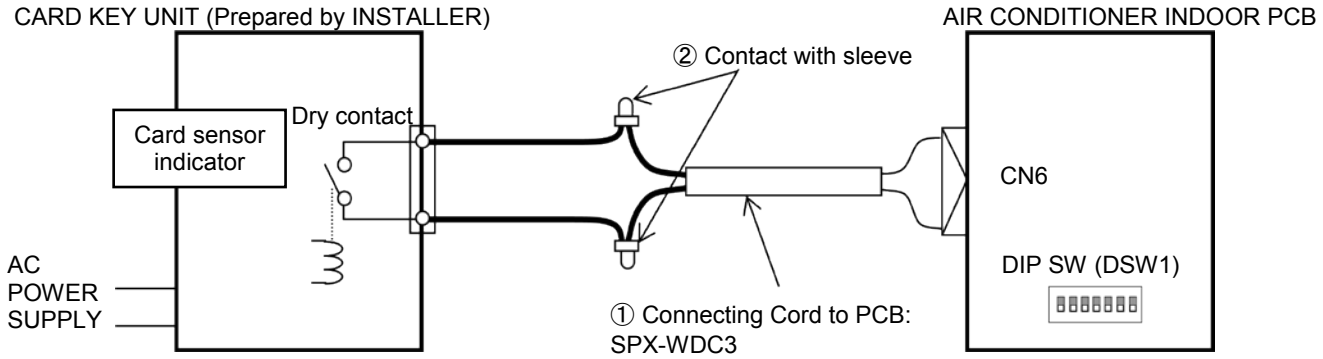

- CONNECTION EXAMPLE

i. Pin No. 3 of DIP SWITCH is set to OFF position (HI Input Active) for Dry Contact Type a

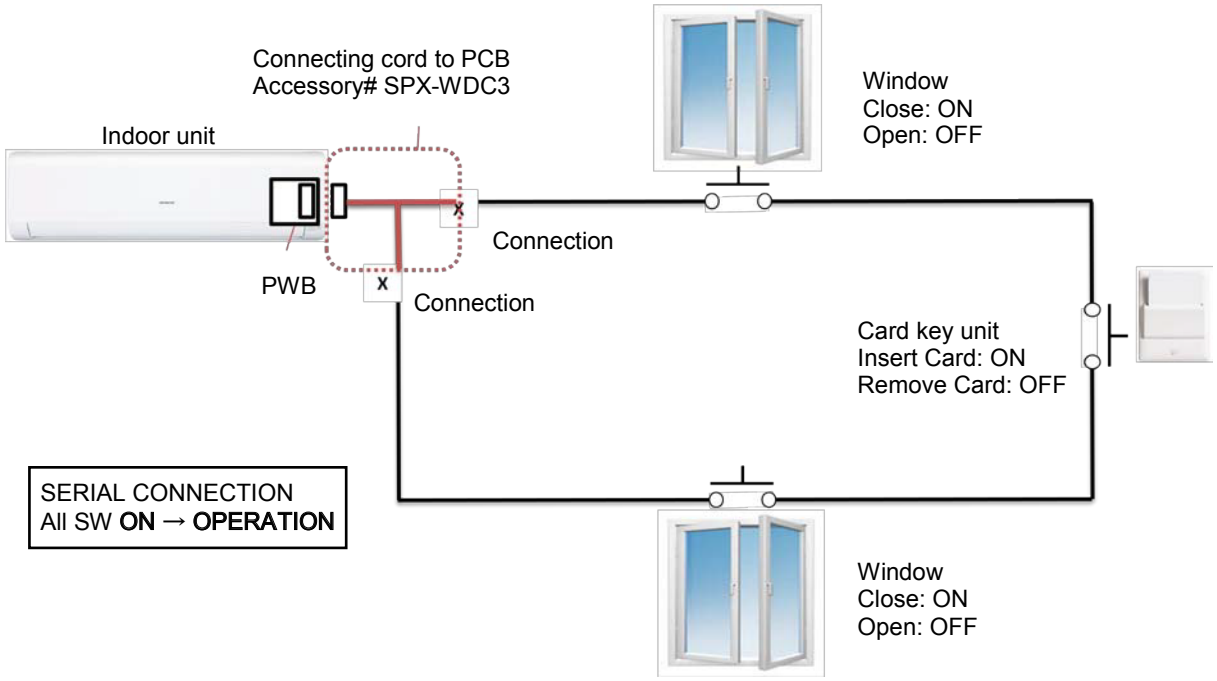

ii. Pin No. 3 of DIP SWITCH is set to ON position (LO Input Active) for Dry Contact Type b

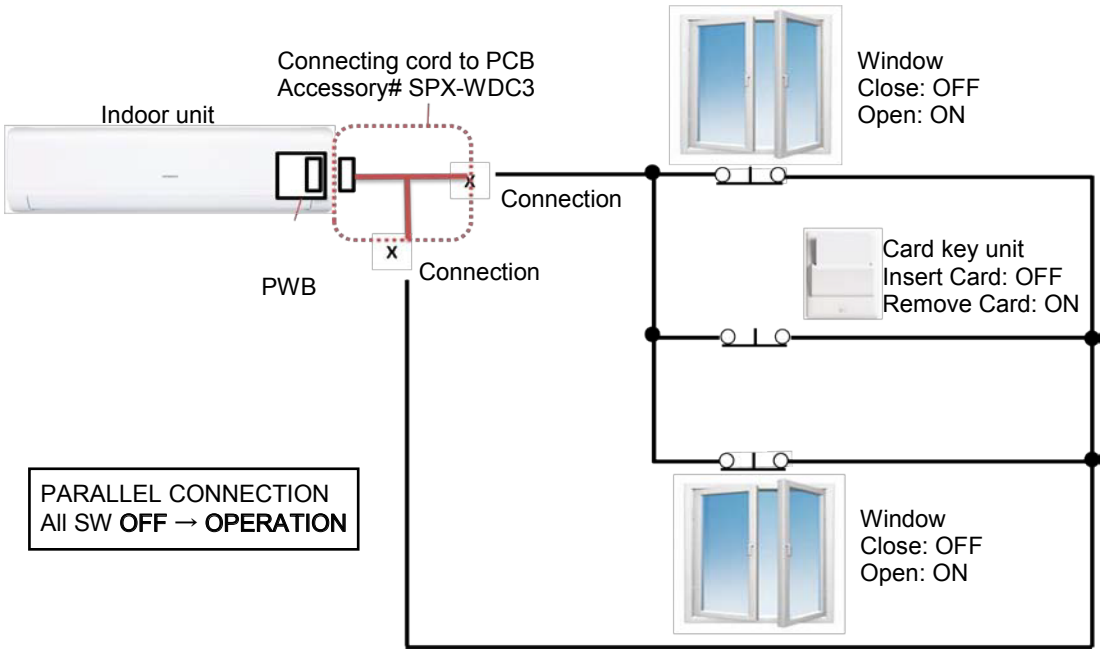

Please refer to the actual manual supplied with the optional connecting cords SPX-WDC3 for more details.

10.4. DISTRIBUTOR – SPX-DST1

The optional distributor is to be used together with the wired remote controller when there is a need to centralize the control of multiple indoor units using only a single wired remote controller.

A single distributor could be connected further to 3 separate distributors so that up to 13 units of indoor could be controlled by a single wired remote controller.

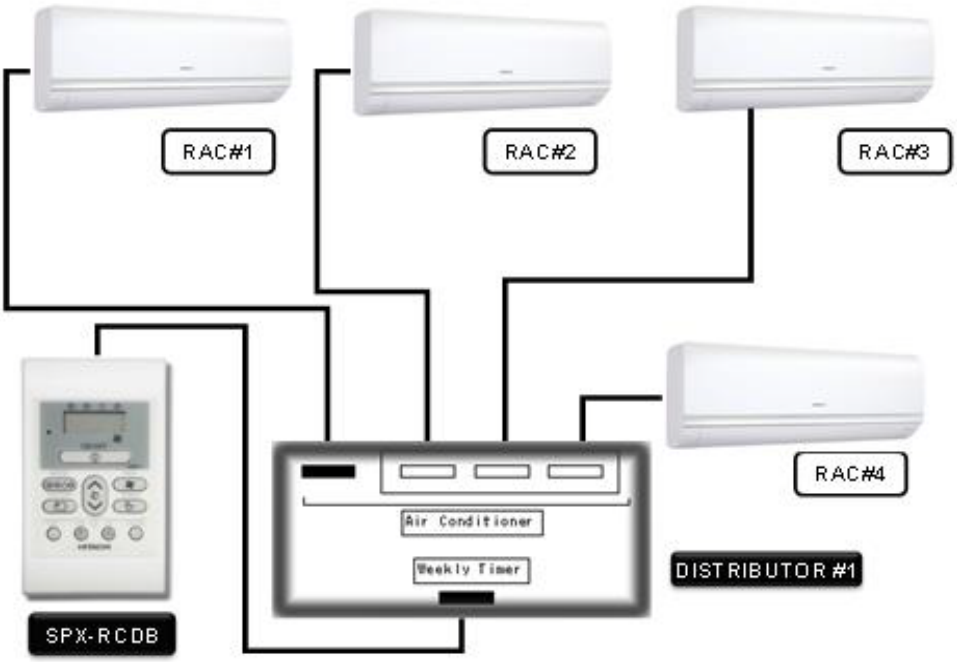

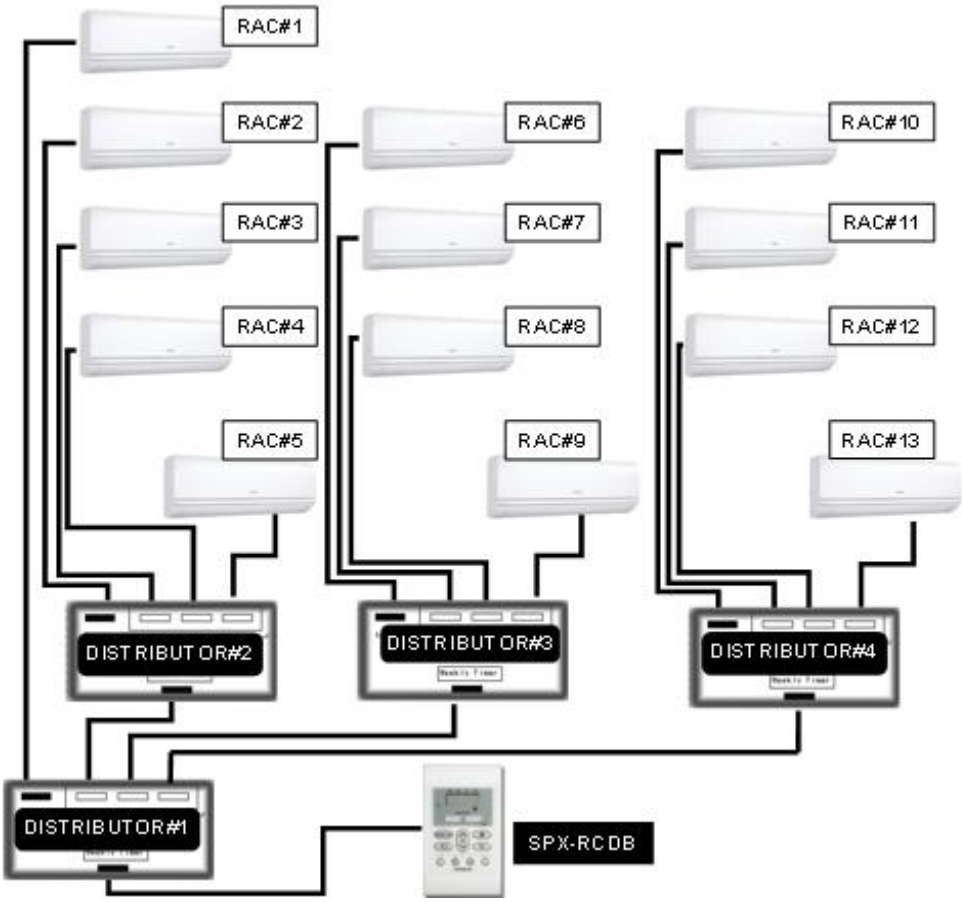

HITACHI

TC-ERP-Model (2019.04)

INDOOR	OUTDOOR
RAK-25PSEW	RAC-25WSE
RAK-35PSEW	RAC-35WSE
RAK-50PSEW	RAC-50WSE
RAK-25PSES	
RAK-35PSES	
RAK-50PSES	