2.1.5. CEILING CASSETTE TYPE: RAI-25RPE / 35RPE / 50RPE / 60RPE / ECPP

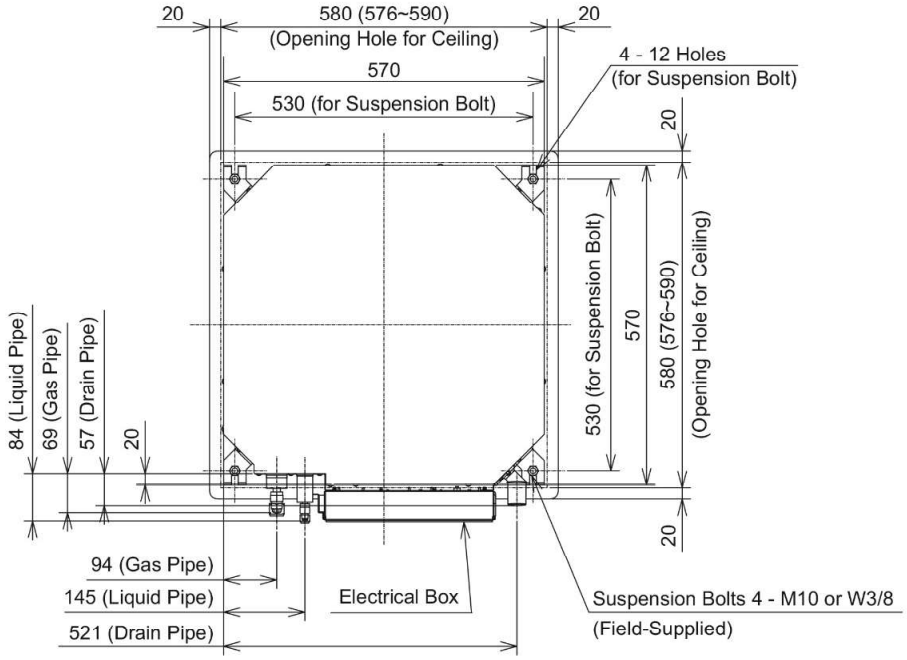

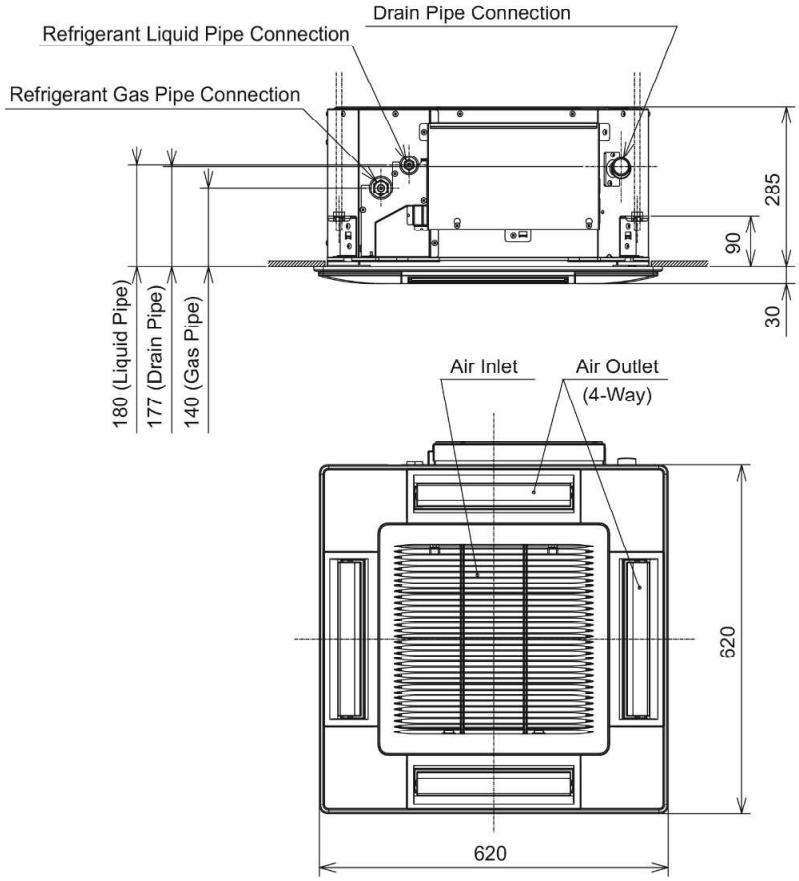

Unit: mm