HITACHI
Inspire the Next

TECHNICAL CATALOGUE

MONOZONE/MULTIZONE

OUTDOOR UNIT	INDOOR
RAC-(25-50)NPA	RAK-(18-50)QXA
RAM-36NP2A	RAK-(18-50)QPA
RAM-53NP2A	RAF-(25-50)QXA
RAM-53NP3A	RAF-(25-50)RPA
RAM-68NP3A	RAI-(25-50)RPA
RAM-70NP4A	RAD-(18-50)RPA
RAM-90NP5A	
RAM-130NP6A	

MONO SPLIT

INDOOR	OUTDOOR
RAK-(18-35)PSA	RAC-(18-35)WSA
RAK-(18-35)PSAN	RAC-(18-35)WSAN
RAK-(18-35)PSPA	RAC-(18-35)WSPA
RAK-(25-50)PXA	RAC-(25-50)WXA
RAK-(18-70)PPA	RAC-(18-70)WPA
RAK-(18-50)PEA	RAC-(18-50)WEA
RAF-(25-50)PXA	RAC-(25-50)FXA
RAF-(25-50)RPA	RAC-(25-50)FPA
RAD-(50-70)PPA	RAC-(50-70)DPA

HITACHI

Specifications in this catalogue are subject to change without prior notice in order for HITACHI to bring in the latest innovations to their customers

Whilst every effort is made to ensure that all dimensions and specifications are correct, any printers' error not rectified are outside the control of HITACHI, who cannot be held responsible for the same

CONTENTS

CONTENTS 1

1 SYSTEM DESCRIPTION 1-1
1.1 LINE UP 1-2
1.1.1 MONOZONE/MULTIZONE 1-2
1.1.2 MONO SPLIT 1-3
1.2 FEATURES AND BENEFITS 1-4
1.2.1 MONO INVERTER - PREMIUM 1-5
1.2.2 WALL TYPE 1-8
1.2.3 FLOOR TYPE 1-9
1.2.4 4 WAY CEILING CASSETTE TYPE 1-10
1.2.5 DUCT TYPE 1-11
1.2.6 FILTERS 1-14
1.3 SYSTEM CONTROL FEATURES 1-17
1.3.1 NEW WIRELESS REMOTE CONTROLLER WITH WEEKLY TIMER 1-18
1.3.2 ADDITIONAL FUNCTION VIA DIP-SWITCH SETTINGS 1-22
1.3.3 DRY CONTACT APPLICATION (USING DIP SWITCH) 1-23
1.3.4 DRY CONTACT APPLICATION (USING JUMPER WIRE) 1-26
1.3.5 FUNCTION SUMMARY FOR MONO SPLIT 1-28
1.3.6 FUNCTION SUMMARY FOR MONOZONE/MULTIZONE 1-29

2 GENERAL DATA 2-1
2.1. MONOZONE / MULTIZONE 2-2
2.1.1. WALL TYPE (RAK-18QXA/25QXA/35QXA/50QXA) 2-2
2.1.2. WALL TYPE (RAK-18QPA/25QPA/35QPA/50QPA) 2-3
2.1.3. CEILING CASSETE (RAI-25RPA/35RPA/50RPA) 2-4
2.1.4. DUCT TYPE (RAD-18RPA/25RPA/35RPA/50RPA) 2-5
2.1.5. FLOOR TYPE (RAF-25QXA/35QXA/50QXA) 2-6
2.1.6. FLOOR TYPE (RAF-25RPA/35RPA/50RPA) 2-7
2.1.7. MONOZONE OUTDOOR (RAC-25NPA/35NPA/50NPA) 2-8
2.1.8. MULTIZONE OUTDOOR (RAM-36NP2A/53NP2A/53NP3A/68NP3A/70NP4A/90NP5A/130NP6A) 2-9
2.2. MONO SPLIT 2-11
2.2.1. WALL TYPE (RAK-18PSA/25PSA/35PSA) 2-11
2.2.2. WALL TYPE (RAC-18WSA/25WSA/35WSA) 2-12
2.2.3. WALL TYPE (RAK-18PSAN/25PSAN/35PSAN) 2-13
2.2.4. WALL TYPE (RAC-18WSAN/25WSAN/35WSAN) 2-14
2.2.5. WALL TYPE (RAK-18PSPA/25PSPA/35PSPA) 2-15
2.2.6. WALL TYPE (RAC-18WSPA/25WSPA/35WSPA) 2-16
2.2.7. WALL TYPE (RAK-25PXA/35PXA/50PXA) 2-17
2.2.8. WALL TYPE (RAC-25WXA/35WXA/50WXA) 2-18
2.2.9. WALL TYPE (RAK-18PPA/25PPA/35PPA) 2-19
2.2.10. WALL TYPE (RAC-18WPA/25WPA/35WPA) 2-20
2.2.11. WALL TYPE (RAK-50PPA/60PPA/70PPA) 2-21
2.2.12. WALL TYPE (RAC-50WPA/60WPA/70WPA) 2-22
2.2.13. WALL TYPE (RAK-18PEA/25PEA/35PEA/50PEA) 2-23
2.2.14. WALL TYPE (RAC-18WEA/25WEA/35WEA/50WEA) 2-24
2.2.15. FLOOR TYPE (RAF-25PXA/35PXA/50PXA) 2-25
2.2.16. FLOOR TYPE (RAC-25FXA/35FXA/50FXA) 2-26
2.2.17. FLOOR TYPE (RAF-25RPA/35RPA/50RPA) 2-27
2.2.18. FLOOR TYPE (RAC-25FPA/35FPA/50FPA) 2-28
2.2.19. DUCT TYPE (RAD-50PPA/60PPA/70PPA) 2-29
2.2.20. DUCT TYPE (RAC-50DPA/60DPA/70DPA) 2-30

3 -DIMENSIONAL DATA 3-1
3.1. MONOZONE / MULTIZONE Indoor Units 3-2
3.1.1. WALL TYPE: RAK-18QXA/25QXA/35QXA/50QXA 3-2
3.1.2. WALL TYPE: RAK-18QPA/25QPA/35QPA/50QPA 3-3
3.1.3. FLOOR TYPE: RAF-25QXA/35QXA/50QXA 3-4
3.1.4. FLOOR TYPE: RAF-25RPA/35RPA/50RPA 3-5
3.1.5. CEILING CASSETTE TYPE: RAI-25RPA/35RPA/50RPA/ECPP 3-6
3.1.6. DUCT TYPE: RAD-18RPA/25RPA/35RPA/50RPA 3-7
3.2. MONOZONE / MULTIZONE Outdoor Units 3-8
3.2.1. MONOZONE: RAC-25NPA/35NPA 3-8
3.2.2. MONOZONE: RAC-50NPA 3-9
3.2.3. 2 ROOMS MULTIZONE: RAM-36NP2A 3-10
3.2.4. 2 ROOMS MULTIZONE: RAM-53NP2A 3-11
3.2.5. 3 ROOMS MULTIZONE: RAM-53NP3A 3-12
3.2.6. 3 ROOMS MULTIZONE: RAM-68NP3A 3-13
3.2.7. 4 ROOMS MULTIZONE: RAM-70NP4A 3-14
3.2.8. 5 ROOMS MULTIZONE: RAM-90NP5A 3-15
3.2.9. 6 ROOMS MULTIZONE: RAM-130NP6A 3-16
3.3. MONO SPLIT 3-17
3.3.1. WALL TYPE: RAK-18PSA/25PSA/35PSA/18PSAN/25PSAN/35PSAN 3-17
3.3.2. WALL TYPE: RAC-18WSA/25WSA/35WSA/18WSAN/25WSAN/35WSAN 3-18
3.3.3. WALL TYPE: RAK-18PSPA/25PSPA/35PSPA 3-19
3.3.4. WALL TYPE: RAC-18WSPA/25WSPA/35WSPA 3-20
3.3.5. WALL TYPE: RAK-25PXA/35PXA/50PXA 3-21
3.3.6. WALL TYPE: RAC-25WXA/35WXA 3-22
3.3.7. WALL TYPE: RAC-50WXA 3-23
3.3.8. WALL TYPE: RAK-18PPA/25PPA/35PPA 3-24
3.3.9. WALL TYPE: RAC-18WPA/25WPA 3-25
3.3.10. WALL TYPE: RAC-35WPA 3-26
3.3.11. WALL TYPE: RAK-50PPA 3-27
3.3.12. WALL TYPE: RAC-50WPA 3-28
3.3.13. WALL TYPE : RAK-60PPA 3-29
3.3.14. WALL TYPE: RAC-60WPA 3-30
3.3.15. WALL TYPE: RAK-70PPA 3-31
3.3.16. WALL TYPE: RAC-70WPA 3-32
3.3.17. WALL TYPE: RAK-18PEA/25PEA/35PEA/50PEA 3-33
3.3.18. WALL TYPE: RAC-18WEA/25WEA 3-34
3.3.19. WALL TYPE: RAC-35WEA 3-35
3.3.20. WALL TYPE: RAC-50WEA 3-36
3.3.21. FLOOR TYPE: RAF-25PXA/35PXA/50PXA 3-37
3.3.22. FLOOR TYPE: RAC-25FXA/35FXA 3-38
3.3.23. FLOOR TYPE: RAC-50FXA 3-39
3.3.24. FLOOR TYPE: RAF-25RPA/35RPA/50RPA 3-40
3.3.25. FLOOR TYPE: RAC-25FPA/35FPA 3-41
3.3.26. FLOOR TYPE: RAC-50FPA 3-42
3.3.27. DUCT TYPE: RAD-50PPA/60PPA/70PPA 3-43
3.3.28. DUCT TYPE: RAC-50DPA/60DPA/70DPA 3-44

4 CAPACITIES AND SELECTION DATA 4-1
4.1. SYSTEM SELECTION PROCEDURE 4-3
4.1.1. Selection Unit Features 4-3
4.1.2. Selection Guide 4-3

4.1.3. MONOZONE / MULTIZONE COMBINATION TABLE 4-4
4.2. CAPACITY CHARACTERISTIC CURVES FOR MONOZONE/MULTIZONE 4-9
4.2.1. RAI-25RPA/RAC-25NPA 4-9
4.2.2. RAI-35RPA/RAC-35NPA 4-10
4.2.3. RAI-50RPA/RAC-50NPA 4-10
4.2.4. RAD-25RPA/RAC-25NPA 4-11
4.2.5. RAD-35RPA/RAC-35NPA 4-12
4.2.6. RAD-50RPA/RAC-50NPA 4-12
4.2.7. RAM-36NP2A 4-13
4.2.8. RAM-53NP2A 4-17
4.2.9. RAM-53NP3A 4-23
4.2.10. RAM-68NP3A 4-30
4.2.11. RAM-70NP4A 4-37
4.2.12. RAM-90NP5A 4-65
4.2.13. RAM-130NP6A 4-138
4.3. Capacity Characteristic Curves For MONO - SPLIT 4-273
4.3.1. RAK-25PXA/RAC-25WXA 4-273
4.3.2. RAK-35PXA/RAC-35WXA 4-273
4.3.3. RAK-50PXA/RAC-50WXA 4-274
4.3.4. RAF-25RPA/RAC-25FPA 4-275
4.3.5. RAF-35RPA/RAC-35FPA 4-275
4.3.6. RAF-50RPA/RAC-50FPA 4-276
4.3.7. RAK-18PSA/RAC-18WSA 4-276
4.3.8. RAK-25PSA/RAC-25WSA 4-277
4.3.9. RAK-35PSA/RAC-35WSA 4-277
4.3.10. RAK-18PPA/RAC-18WPA 4-278
4.3.11. RAK-25PPA/RAC-25WPA 4-278
4.3.12. RAK-35PPA/RAC-35WPA 4-279
4.3.13. RAK-50PPA/RAC-50WPA 4-279
4.3.14. RAK-60PPA/RAC-60WPA 4-280
4.3.15. RAK-70PPA/RAC-70WPA 4-280
4.3.16. RAD-50PPA/RAC-50DPA 4-281
4.3.17. RAD-60PPA/RAC-60DPA 4-281
4.3.18. RAD-70PPA/RAC-70DPA 4-282
4.3.19. RAK-18PEA/RAC-18WEA 4-282
4.3.20. RAK-25PEA/RAC-25WEA 4-283
4.3.21. RAK-35PEA/RAC-35WEA 4-283
4.3.22. RAK-50PEA/RAC-50WEA 4-284
4.3.23. RAK-18PSAN/RAC-18WSAN 4-284
4.3.24. RAK-25PSAN/RAC-25WSAN 4-285
4.3.25. RAK-35PSAN/RAC-35WSAN 4-285
4.3.26. RAK-18PSPA/RAC-18WSPA 4-286
4.3.27. RAK-25PSPA/RAC-25WSPA 4-286
4.3.28. RAK-35PSPA/RAC-35WSPA 4-287
4.3.29. RAF-25PXA/RAC-25FXA 4-287
4.3.30. RAF-35PXA/RAC-35FXA 4-288
4.3.31. RAF-50PXA/RAC-50FXA 4-288
4.4. Correction Factors According to Piping Length 4-289
4.5. Correction Factors According to Defrosting Operation 4-295
4.6. Combination Table For MONOZONE Outdoor 4-296
4.6.1. RAC-25/35/50NPA 4-296
Combination Table For MULTIZONE Outdoor 4-297
4.6.2. RAM-35NP2A 4-297
4.6.3. RAM-53NP2A 4-299
4.6.4. RAM-53NP3A 4-301
4.6.5. RAM-68NP3A 4-304
4.6.6. RAM-70NP4A 4-307
4.6.7. RAM-90NP5A 4-312
4.6.8. RAM-130NP6A 4-324
4.7. Sound Data 4-344
4.7.1. RAC-25NPA 4-344
4.7.2. RAC-35NPA 4-344
4.7.3. RAC-50NPA 4-345
4.7.4. RAC-18WSA 4-346
4.7.5. RAC-25WSA 4-347
4.7.6. RAC-35WSA 4-348
4.7.7. RAC-25WXA 4-349
4.7.8. RAC-35WXA 4-350
4.7.9. RAC-50WXA 4-351
4.7.10. RAC-25FXA 4-352
4.7.11. RAC-35FXA 4-353
4.7.12. RAC-50FXA 4-354
4.7.13. RAC-25FPA 4-355
4.7.14. RAC-35FPA 4-356
4.7.15. RAC-50FPA 4-357
4.7.16. RAC-18WPA 4-358
4.7.17. RAC-25WPA 4-359
4.7.18. RAC-35WPA 4-360
4.7.19. RAC-50WPA 4-361
4.7.20. RAC-60WPA 4-362
4.7.21. RAC-70WPA 4-363
4.7.22. RAC-50DPA 4-364
4.7.23. RAC-60DPA 4-365
4.7.24. RAC-70DPA 4-366
4.7.25. RAM-35NP2A 4-367
4.7.26. RAM-53NP2A / RAM-53NP3A 4-368
4.7.27. RAM-68NP3A 4-368
4.7.28. RAM-70NP4A 4-369
4.7.29. RAM-90NP5A 4-369
4.7.30. RAM-130NP6A 4-370

5 WORKING RANGE 5-1
5.1. Power Supply 5-2
5.2. Working Range 5-2
5.2.1. MONO SPLIT - PREMIUM 5-2
5.2.2. MULTIZONE/MONOZONE/MONO SPLIT 5-3

6 ELECTRICAL DATA 6-1
6.1. Indoor Unit 6-2
6.2. Outdoor Unit 6-4

7 ELECTRICAL WIRING DIAGRAM 7-1
7.1. MONOZONE/MULTIZONE 7-2
7.1.1. RAK-18QXA, RAK-25QXA, RAK-35QXA, RAK-50QXA 7-2
7.1.2. RAK-18QPA, RAK-25QPA, RAK-35QPA, RAK-50QPA 7-2
7.1.3. RAF-25QXA, RAF-35QXA, RAF-50QXA 7-3
7.1.4. RAF-25RPA, RAF-35RPA, RAF-50RPA 7-4
7.1.5. RAI-25RPA, RAI-35RPA, RAI-50RPA 7-4
7.1.6. RAD-18RPA, RAD-25RPA, RAD-35RPA, RAD-50RPA 7-5
7.1.7. RAC-25NPA, RAC-35NPA, RAC-50NPA 7-6
7.1.8. RAM-36NP2A 7-7
7.1.9. RAM-53NP2A 7-8
7.1.10. RAM-53NP3A 7-9
7.1.11. RAM-68NP3A 7-10
7.1.12. RAM-70NP4A 7-11
7.1.13. RAM-90NP5A 7-12
7.1.14. RAM-130NP6A (OUTDOOR 1) 7-13
7.1.15. RAM-130NP6A (OUTDOOR 2) 7-14
7.2. MONO - SPLIT 7-15
7.2.1. RAK-18PSA, RAK-25PSA, RAK-35PSA 7-15
7.2.2. RAK-18PSAN, RAK-25PSAN, RAK-35PSAN 7-16
7.2.3. RAC-18WSA, RAC-25WSA, RAC-35WSA, RAC-18WSAN, RAC-25WSAN, RAC-35WSAN 7-17
7.2.4. RAK-18PSPA, RAK-25PSPA, RAK-35PSPA 7-18
7.2.5. RAC-18WSPA, RAC-25WSPA, RAC-35WSPA 7-19
7.2.6. RAK-25PXA, RAK-35PXA, RAK-50PXA 7-20
7.2.7. RAC-25WXA, RAC-35WXA 7-21
7.2.8. RAC-50WXA 7-22
7.2.9. RAK-18PPA, RAK-25PPA, RAK-35PPA 7-23
7.2.10. RAC-18WPA, RAC-25WPA 7-24
7.2.11. RAC-35WPA 7-25
7.2.12. RAK-50PPA 7-26
7.2.13. RAC-50WPA 7-27
7.2.14. RAK-60PPA 7-28
7.2.15. RAC-60WPA 7-29
7.2.16. RAK-70PPA 7-30
7.2.17. RAC-70WPA 7-31

7.2.18. RAK-18PEA, RAK-25PEA, RAK-35PEA, RAK-50PEA 7-32
7.2.19. RAC-18WEA, RAC-25WEA 7-33
7.2.20. RAC-35WEA 7-34
7.2.21. RAC-50WEA 7-35
7.2.22. RAF-25PXA, RAF-35PXA, RAF-50PXA 7-36
7.2.23. RAC-25FXA, RAC-35FXA 7-37
7.2.24. RAC-50FXA 7-38
7.2.25. RAF-25RPA, RAF-35RPA, RAF-50RPA 7-39
7.2.26. RAC-25FPA, RAC-35FPA 7-40
7.2.27. RAC-50FPA 7-41
7.2.28. RAD-50PPA, RAD-60PPA, RAD-70PPA 7-42
7.2.29. RAC-50DPA, RAC-60DPA, RAC-70DPA 7-43

8 REFRIGERANT CYCLE 8-1
8.1. Monozone/Multizone Indoor Units 8-2
8.1.1. WALL TYPE: RAK-18QXA 8-2
8.1.2. WALL TYPE: RAK-25QXA/35QXA/50QXA 8-2
8.1.3. WALL TYPE: RAK-18QPA/25QPA 8-2
8.1.4. WALL TYPE: RAK-35QPA 8-3
8.1.5. WALL TYPE: RAK-50QPA 8-3
8.1.6. FLOOR TYPE: RAF-25QXA/35QXA/50QXA 8-4
8.1.7. FLOOR TYPE: RAF-25RPA/35RPA 8-4
8.1.8. FLOOR TYPE: RAF-50RPA 8-4
8.1.9. CEILING CASSETTE: RAI-25RPA/35RPA/50RPA 8-5
8.1.10. DUCT TYPE: RAD-18RPA/25RPA/35RPA 8-5
8.1.11. DUCT TYPE: RAD-50RPA 8-5
8.2. Monozone/Multizone Outdoor Units 8-6
8.2.1. MONOZONE: RAC-25NPA/35NPA 8-6
8.2.2. MONOZONE: RAC-50NPA 8-6
8.2.3. 2 ROOMS MULTIZONE: RAM-36NP2A 8-6
8.2.4. 2 ROOMS MULTIZONE: RAM-53NP2A 8-8
8.2.5. 3 ROOMS MULTIZONE: RAM-53NP3A 8-9
8.2.6. 3 ROOMS MULTIZONE: RAM-68NP3A 8-11
8.2.7. 4 ROOMS MULTIZONE: RAM-70NP4A 8-12
8.2.8. 5 ROOMS MULTIZONE: RAM-90NP5A 8-13
8.2.9. 6 ROOMS MULTIZONE: RAM-130NP6A 8-14
8.3. MONO SPLIT 8-16
8.3.1. WALL TYPE: RAK-18PSA/25PSA/35PSA / RAC-18WSA/25WSA/35WSA 8-16
8.3.2. WALL TYPE: RAK-18PSAN/25PSAN/35PSAN / RAC-18WSAN/25WSAN/35WSAN 8-17
8.3.3. WALL TYPE: RAK-18PSPA/25PSPA/35PSPA / RAC-18WSPA/25WSPA/35WSPA 8-17
8.3.4. WALL TYPE: RAK-25PXA / RAC-25WXA 8-18
8.3.5. WALL TYPE: RAK-35PXA / RAC-35WXA 8-19
8.3.6. WALL TYPE: RAK-50PXA / RAC-50WXA 8-20
8.3.7. WALL TYPE: RAK-18PPA/25PPA / RAC-18WPA/25WPA 8-21
8.3.8. WALL TYPE: RAK-35PPA / RAC-35WPA 8-21
8.3.9. WALL TYPE: RAK-50PPA / RAC-50WPA 8-22
8.3.10. WALL TYPE: RAK-60PPA / RAC-60WPA 8-23
8.3.11. WALL TYPE: RAK-70PPA / RAC-70WPA 8-24
8.3.12. WALL TYPE: RAK-18PEA/25PEA / RAC-18WEA/25WEA 8-25
8.3.13. WALL TYPE: RAK-35PEA / RAC-35WEA 8-26
8.3.14. WALL TYPE: RAK-50PEA / RAC-50WEA 8-26
8.3.15. FLOOR TYPE: RAF-25PXA/35PXA / RAC-25FXA/35FXA 8-27
8.3.16. FLOOR TYPE: RAF-50PXA / RAC-50FXA 8-28
8.3.17. FLOOR TYPE: RAF-25RPA / RAC-25FPA 8-29
8.3.18. FLOOR TYPE: RAF-35RPA / RAC-35FPA 8-29
8.3.19. FLOOR TYPE: RAF-50RPA / RAC-50FPA 8-30
8.3.20. DUCT TYPE: RAD-50PPA/60PPA / RAC-50DPA/60DPA 8-31
8.3.21. DUCT TYPE: RAD-70PPA / RAC-70DPA 8-32

9 REMOTE CONTROLLERS OPERATION 9-1
9.1 WIRELESS REMOTE CONTROL FUNCTION 9-2
9.1.1. RAR-5E1, RAR-5E2, RAR-5E3, RAR-5E4, RAR-5E5 9-2
9.1.2. RAR-5J1. RAR-5J2 9-9
9.1.3. RAR-5F1 9-13
9.2 Wired Remote Control (OPTIONAL) 9-16
9.2.1. REMOTE CONTROLLER TYPE 9-16
9.2.2. SHIFT VALUE 9-17
9.2.3. ERROR CODE INFORMATION 9-17

10 UNITS INSTALLATION 10-1
10.1 INSTALLATION OF INDOOR UNIT 10-2
10.1.1 INSTALLATION OF WALL TYPE INDOOR 10-2
10.1.2 INSTALLATION OF FLOOR TYPE INDOOR (RAF-QXA, RAF-PXA) 10-7
10.1.3 INSTALLATION OF FLOOR TYPE INDOOR (RAF-RPA) 10-12
10.1.4 INSTALLATION OF 4 WAY CEILING CASSETTE TYPE INDOOR 10-17
10.1.5 INSTALLATION OF NORMAL STATIC PRESSURE DUCT TYPE INDOOR 10-22
10.1.6 INSTALLATION OF MIDDLE STATIC PRESSURE DUCT TYPE INDOOR 10-34
10.2 INSTALLATION OF OUTDOOR UNIT 10-41
10.2.1. SINGLE SPLIT AND MULTI TYPE OUTDOOR 10-41
10.3 FINAL STAGE OF INSTALLATION 10-44
10.3.1. INSULATION AND MAINTENANCE OF PIPE CONNECTIONS 10-44
10.3.2. INSTALLATION OF REMOTE CONTROLLER 10-44

11 REFRIGERANT PIPING AND REFRIGERANT CHARGE 11-1
11.1. Refrigerant Piping 11-2
11.1.1. PREPARATION OF PIPE 11-2
11.1.2. Pipe Connection 11-2
11.1.3. Removal of air from the pipe and gas leakage inspection 11-2
11.2. RECOVERY OF REFRIGERANT DURING RELOCATION OR UNINSTALLING OF UNIT. 11-3

12 DRAIN PIPING 12-1
12.1 WALL TYPE INDOOR 12-2
12.2 FLOOR TYPE INDOOR 12-2
12.2.1 DRAIN PIPE 12-2
12.3 4 WAY CEILING CASSETTE 12-2
12.3.1 Drain Pipe installation 12-2
12.3.2 Connection of Drain Pipe 12-2
12.4 DUCT TYPE INDOOR 12-3
12.4.1 Drain Pipe installation 12-3
12.4.2 Connection of Drain pipe 12-3
12.4.3 Checking of drawing hose 12-4
12.5 DRAIN PUMP 12-5
12.5.1 Build in drain pump 12-5
12.5.2 Specification of drain pump 12-5
12.6 CONDENSED WATER DISPOSAL OF OUTDOOR UNIT 12-5
12.7 Drain Pipe Accessories 12-6

13 ELECTRICAL WIRING 13-1
13.1 General Check 13-2
13.2 Electrical wiring for MONOZONE/MULTIZONE Unit 13-2
13.2.1 Procedures of Wiring 13-2
13.2.2 Electrical Wiring for Outdoor unit 13-3
13.2.3 Electrical Wiring for Wall Type Indoor unit 13-4
13.2.4 Electrical Wiring for Floor Type Indoor unit 13-5
13.2.5 Electrical Wiring for 4 Way Ceiling Cassette Type Indoor unit (RAI-25RPA/RAI-35RPA/RAI-50RPA) 13-6
13.2.6 Electrical Wiring for Duct Type Indoor unit (RAD-18RPA/RAD-25RPA/RAD-35RPA/RAD-50RPA/RAD-50PPA/RAD-60PPA/RAD-70PPA) 13-6
13.3 Electrical wiring for SINGLE INVERTER Unit 13-7

13.3.1 Procedures of Wiring ____ 13-7
13.3.2 Electrical Wiring for Indoor unit ____ 13-8
13.3.3 Electrical Wiring for Outdoor unit ____ 13-10

14 TROUBLESHOOTING ____ 14-1
14.1 PRECAUTIONS FOR TROUBLE SHOOTING ____ 14-3
14.1.1 MONOZONE RAC-25NPA / 35NPA / 50NPA ____ 14-3
14.1.2 MULTIZONE RAM-36NP2A ____ 14-3
14.1.3 MULTIZONE/MONO SPLIT RAM-53NP2A / 53NP3A / 68NP3A / 70NP4A , MONO SPLIT RAF-50PXA/RAC-50FXA ____ 14-4
14.1.4 MULTIZONE RAM-90NP5A ____ 14-4
14.1.5 MULTIZONE RAM-130NP6A ____ 14-5
14.1.6 MONO SPLIT RAK-18/25/35PSA / RAC-18/25/35WSA , RAK-18/25/35PSAN / RAC-18/25/35WSAN , RAK-18/25/35PSPA / RAC-18/25/35WSPA ____ 14-5
14.1.7 MONO SPLIT RAK-18/25/35PPA / RAC-18/25/35WPA , RAK-18/25/35/50PEA / RAC-18/25/35/50WEA , RAF-25/35RPA / RAC-25/35FPA ____ 14-6
14.1.8 MONO SPLIT RAK-50/60/70PPA / RAC-50/60/70WPA ____ 14-6
14.1.9 MONO SPLIT RAF-50RPA / RAC-50FPA ____ 14-7
14.1.10 MONO SPLIT RAF-25/35PXA / RAC-25/35FXA ____ 14-7
14.1.11 MONO SPLIT RAD-50/60/70PPA / RAC-50/60/70DPA ____ 14-8
14.2 DISCHARGE PROCEDURE AND POWER SHUT OFF METHOD FOR POWER CIRCUIT ____ 14-9
14.2.1 MONOZONE RAC-25NPA / 35NPA / 50NPA & MULTIZONE RAM-36NP2A / 53NP2A / 53NP3A / 68NP3A / 70NP4A / 130NP6A & MONO SPLIT RAF-50PXA / RAC-50FXA, RAD-50/60/70PPA / RAC-50/60/70DPA ____ 14-9
14.2.2 MULTIZONE RAM-90NP5A ____ 14-9
14.2.3 MONO SPLIT RAK-18/25/35PSA / RAC-18/25/35WSA, RAK-18/25/35PSAN / RAC-18/25/35WSAN , RAK-18/25/35PSPA / RAC-18/25/35WSPA ____ 14-10
14.2.4 MONO SPLIT RAK-18/25/35PPA / RAC-18/25/35WPA, RAK-18/25/35/50PEA / RAC-18/25/35/50WEA , RAF-25/35PXA / RAC-25/35FXA RAF-50RPA / RAC-50FPA ____ 14-10
14.2.5 MONO SPLIT RAK-50/60/70PPA / RAC-50/60/70WPA ____ 14-11
14.2.6 MONO SPLIT RAF-25/35RPA / RAC-25/35FPA ____ 14-11
14.3 PRELIMINARY CHECK ON INDOOR/OUTDOOR UNIT ELECTRICAL PARTS AND REFRIGERATING ____ 14-12
14.3.1 Support Function of Failure Diagnosis ____ 14-13
14.4 CHECKING THE INDOOR UNIT ELECTRICAL PARTS ____ 14-14
14.4.1 No power is detected (no operation) ____ 14-14
14.4.2 Indoor fan does not operate (others are normal) – RAK-25/35/50PXA, RAK-18/25/35/50/70PPA, RAK-18/25/35/50PEA, RAF-25/35/50RPA, RAF-25/35/50PXA, RAD-50/60/70PPA ____ 14-16
14.4.3 Air deflector does not move (others are normal) ____ 14-16
14.4.4 Check the control P.W.B. (power circuit) – RAK-25/35PXA, RAK-18/25/35PPA, RAK-18/25/35/50PEA, RAF-25/35/50RPA, RAF-25/35PXA ____ 14-16
14.4.5 Checking the remote controller ____ 14-17
14.4.6 Outdoor unit does not operate (but receives remote infrared signal) ____ 14-17
14.4.7 All systems stop from several seconds to several minutes after operation is started (all indicators are also off) ____ 14-18
14.5 CHECKING OUTDOOR UNIT ELECTRICAL PARTS ____ 14-19
14.5.1 No operation or abnormal operation (RAC-18/25/35WPA, RAC-18/25/35/50WEA, RAC-25/35FPA, RAC-25/35FXA ____ 14-19
14.5.2 No operation or abnormal operation (RAC-18/25/35WSA, RAC-25/35/50WXA, RAC-50/60/70WPA, RAC-50FPA, RAC-50FXA, RAC-50/60/70DPA ____ 14-21
14.6 CHECKING BETWEEN GAS LEAKAGE AND COMPRESSOR FAULTY ____ 14-24
14.6.1 Troubleshooting procedure (No operation, No heating or No cooling) ____ 14-24
14.7 TROUBLESHOOTING WHEN INDOOR TIMER LAMP BLINKS ____ 14-25
14.7.1 MONOZONE / MULTIZONE indoor ____ 14-25
14.7.2 MONO SPLIT INDOOR (RAK-25/35PXA, RAK-18/25/35/50/60/70PPA, RAK-18/25/35/50PEA, RAF-25/35/50RPA) ____ 14-26
14.7.3 MONO SPLIT INDOOR (RAK-18/25/35PSA, RAK-18/25/35PSAn, RAK-18/25/35PSPA) ____ 14-27
14.7.4 MONO SPLIT INDOOR (RAK-50PXA) ____ 14-28
14.7.5 MONO SPLIT INDOOR (RAF-25/35/50PXA) ____ 14-29
14.7.6 MONO SPLIT INDOOR (RAD-50/60/70PPA) ____ 14-30
14.8 TROUBLESHOOTING WHEN OUTDOOR LED LAMP BLINKS ____ 14-31
14.8.1 MONOZONE RAC-25NPA / 35NPA / 50NPA ____ 14-31
14.8.2 MULTIZONE ____ 14-32
14.8.3 COMMUNICATION ERROR DIAGNOSIS MULTIZONE RAM- 53NP3A / 68NP3A / 70NP4A / 130NP6A ____ 14-33
14.8.4 COMMUNICATION ERROR DIAGNOSIS MULTIZONE RAM-90NP5A ____ 14-34
14.8.5 MONO SPLIT(RAC-18/25/35WPA, RAC-25/35WXA, RAC-25/35FXA) ____ 14-34
14.8.6 MONO SPLIT (RAC-50WXA, RAC-50FXA ____ 14-35
14.8.7 MONO SPLIT (RAC-50/60/70WPA, RAC-50/60/70DPA) ____ 14-36
14.9 CHECKING POWER MODULE ____ 14-38
14.9.1 RAC-25NPA, 35NPA, 50NPA & RAM-36NP2A, 53NP2A, 53NP3A, 68NP3A, 70NP4A, 130NP6A ____ 14-38
14.9.2 RAM-90NP5A ____ 14-38
14.9.3 RAC-18/25WPA, RAC-25/35/50WXA, RAC-25/35/50FXA ____ 14-39
14.9.4 RAC-35WPA ____ 14-39
14.9.5 RAC-50/60/70WPA, & RAC-50/60/70DPA ____ 14-40
14.10 THERMISTOR ____ 14-41
14.10.1 Name and role of each thermistor ____ 14-41
14.10.2 Reference value for thermistor's resistance and temperature ____ 14-41
14.10.3 Monozone Outdoor ____ 14-42

15 MISCELLANEOUS NOTE ____ 15-1
15.1. INSTALLATION AT COLD REGIONS OR SNOWFALL REGIONS. ____ 15-2
15.2. INSTALLATION POINTS ON OUTDOOR UNITS IN COLD OR SNOWFALL REGIONS. ____ 15-2
15.2.1. Installation place of Cold and Snowfall Regions ____ 15-2
15.2.2. Considerations to the Seasonal Winds and Snowfall ____ 15-2
15.2.3. Considerations to Snowfall / Snow Buildup ____ 15-3
15.2.4. Considerations to Sliding Snow from Roof or SNOWFALL ____ 15-4
15.2.5. As to Proper Drainage of Defrosting WATER ____ 15-5

15.2.6. Request to cut Net attached to Rear side of Outdoor Unit _____ 15-5
15.2.7. Installation of HOT PIPE _____ 15-5
15.3. H-LINK ADAPTOR _____ 15-7
15.3.1. Safety summary _____ 15-7
15.3.2. Installation WORK _____ 15-7
15.3.3. Electrical Wiring _____ 15-8
15.3.4. DIP switch setting _____ 15-9
15.3.5. TEST RUN _____ 15-10

1 SYSTEM DESCRIPTION

CONTENTS

1 SYSTEM DESCRIPTION ____ 1-1

1.1 LINE UP ____ 1-2

1.1.1 MONOZONE/MULTIZONE ____ 1-2
1.1.2 MONO SPLIT ____ 1-3

1.2 FEATURES AND BENEFITS ____ 1-4

1.2.1 MONO INVERTER - PREMIUM ____ 1-5
1.2.2 WALL TYPE ____ 1-8
1.2.3 FLOOR TYPE ____ 1-9
1.2.4 4 WAY CEILING CASSETTE TYPE ____ 1-10
1.2.5 DUCT TYPE ____ 1-11
1.2.6 FILTERS ____ 1-14

1.3 SYSTEM CONTROL FEATURES ____ 1-17

1.3.1 NEW WIRELESS REMOTE CONTROLLER WITH WEEKLY TIMER ____ 1-18
1.3.2 ADDITIONAL FUNCTION VIA DIP-SWITCH SETTINGS ____ 1-22
1.3.3 DRY CONTACT APPLICATION (USING DIP SWITCH) ____ 1-23
1.3.4 DRY CONTACT APPLICATION (USING JUMPER WIRE) ____ 1-26
1.3.5 FUNCTION SUMMARY FOR MONO SPLIT ____ 1-28
1.3.6 FUNCTION SUMMARY FOR MONOZONE/MULTIZONE ____ 1-29

1.1 LINE UP

1.1.1 MONOZONE/MULTIZONE

■ **Various Indoor units and combinations**

The new line-up of new Monozone/Multizone series indoor units has been extended up to 6 indoor units in 27 types to find various building requirements.

MULTIZONE Combinations

Indoor Unit Type	Nominal Cooling Capacity (kW)			
	*1.2↔1.8	2.5	3.5	5.0
RAK -QXA	O	O	O	O
RAK -QPA	O	O	O	O
RAI-RPA	-	O	O	O
RAD-RPA	O	O	O	O
RAF-QXA	-	O	O	O
RAF-RPA	-	O	O	O

O: AVAILABLE

*Note: RAD-RPA is not available for 1.2kW connection.

MONOZONE Combinations

Indoor Unit Type	Nominal Cooling Capacity (kW)		
	2.5	3.5	5.0
RAD-RPA	O	O	O
RAI-RPA	O	O	O
Outdoor Unit	**Nominal Cooling Capacity (kW)**		
	2.5	3.5	5.0
RAC-NPA	O	O	O

O: AVAILABLE

■ **Minimum and maximum combination of Outdoor and Indoor Units**

Outdoor Unit Model	Indoor Unit				
	Minimum Combination Kilowatt (kW)	Maximum Combination Kilowatt (kW)	Minimum Combination of Indoor Unit	Maximum Combination of Indoor Unit	Minimum Individual Operation Kilowatt (kW)
RAM-36NP2A	2.4↔3.6	6.0	2	2	*1.2↔1.8
RAM-53NP2A	2.4↔3.6	8.5	2	2	*1.2↔1.8
RAM-53NP3A	2.4↔3.6	8.8	2	3	*1.2↔1.8
RAM-68NP3A	2.4↔3.6	11.2	2	3	*1.2↔1.8
RAM-70NP4A	2.4↔3.6	11.2	2	4	*1.2↔1.8
RAM-90NP5A	2.4↔3.6	15.7	2	5	*1.2↔1.8
RAM-130NP6A	4.8↔6.4	17.6	4	6	*1.2↔1.8

1) In case that RAM-36/52NP2A, 52/68NP3A, 70NP4A, and 90NP5A is used, the minimum quantity of indoor unit to be connected shall be 2
2) In case that RAM-130NP6A is used, the minimum quantity of indoor units to be connected shall be 4.
3) Simultaneous operation of cooling (dry) and heating is not available

* Cooling capacity 1.2kW /Heating capacity 1.8kW is a guide when the nominal capacity (Cooling capacity 1.8kW/Heating capacity 2.5kW) is reduced with the selector switch. The values are not to be taken as exact

1.1.2 MONO SPLIT

Indoor Unit Type	Nominal Cooling Capacity (kW)						
	1.8	2.0	2.5	3.5	5.0	6.0	7.0
RAK-PSA RAC-WSA	O	-	O	O	-	-	-
RAK-PSAN RAC-WSAN	O	-	O	O	-	-	-
RAK-PSPA RAC-WSPA	O	-	O	O	-	-	-
RAK-PXA RAC-WXA	-	-	O	O	O	-	-
RAK-PPA RAC-WPA	-	O	O	O	O	O	O
RAK-PEA RAC-WEA	-	O	O	O	O	-	-
RAF-PXA RAC-FXA	-	-	O	O	O	-	-
RAF-RPA RAC-FPA	-	-	O	O	O	-	-
RAD-PPA RAC-DPA	-	-	-	-	O	O	O

1.2 FEATURES AND BENEFITS

■ High economical efficiency operation

HITACHI uses the high technology to achieve the high operation efficiency. The applications of the following technologies provide HITACHI to achieve results like the great power saving due to heat recovery system.

■ All PAM Inverter

Inverter driven systems have a big performance advantage over constant speed systems. The variable compressor can make a very fast start-up and reach the setting temperature rapidly, then reduce the rotation speed to achieve energy savings of about 30% with no loss of comfort. Moreover, only Hitachi's DC driven fans and compressors deliver about 10% better performance than AC inverters. HITACHI is the world's pioneer of DC inverter systems and PAM in room air conditioners.

Superior Performance

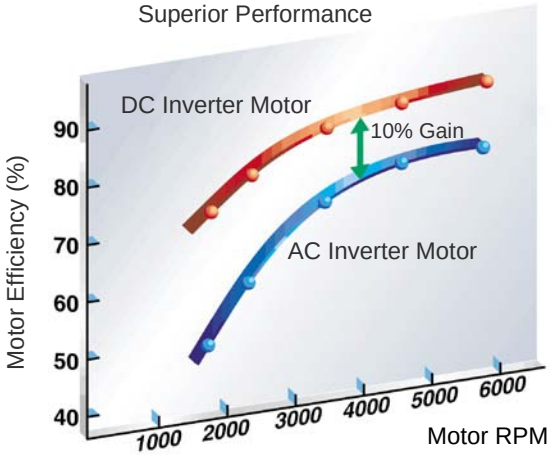

■ Inverter Control

Hitachi's PAM control system is able to keep the current pulse waveform to avoid distortion. It enhances the power efficiency. The cutting edge device is employed in HITACHI MONOZONE/MULTIZONE for your comfort and energy saving for our environment.

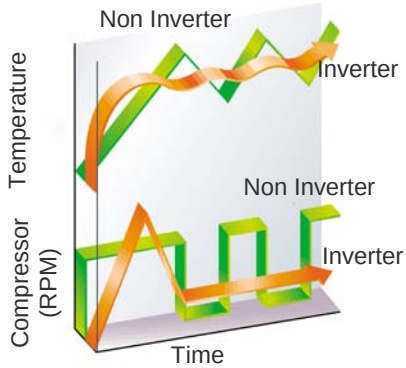

Rapid start up

The variable speed compressor (inverter) enables the system to rapidly reach the desired room temperature setting.

Once the desired room temperature has been achieved, the compressor rotation speed is reduced, saving up to 30% in energy usage (when compared to conventional systems) without compromising comfort levels

■ High performance, heating at –15°C

HITACHI's PAM inverter system achieves the effective utilization of power input and minimizes loss less than 1%. You can enjoy high COP, top class in industry. Especially heating performance is improved and you can enjoy heating comfort even at -15°C degree ambient temperature

■ Auto-Restart -

The Auto-restart mode comes as a standard feature and the unit automatically resumes operation in the previous mode after power resume from failure.

■ Auto Changeover

The built-in microcomputer continuously selects the best operating mode automatically to provide maximum comfort, based on the set temperature and measurements taken by a sensor.

■ DC 2-Cylinder Rotary compressor

Hitachi's DC 2-Cylinder rotary compressor has less vibration and higher efficiency than conventional rotary compressors

- Two rotating cylinders ensure well-balanced rotations unlike the conventional single rotary type, thus vibration noise is greatly reduced.
- The compressor's operation is improved by moving two independent cylinders efficiently

Comparison of Vibration

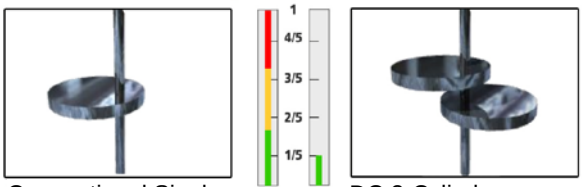

Conventional Single Rotary

DC 2-Cylinder Rotary

■ Easy servicing

Self-diagnosis

- In case failure occurs to the air conditioner, by pressing (INFO) button of the remote controller, an error code will be displayed.

1.2.1 MONO INVERTER - PREMIUM

■ High Efficient Inverter System

Vector control and high efficient motor achieve energy saving and high power operation.
Hitachi uses vector control as an inverter operation system. This enables gradual control of motor rotation rate and electric current, so that the compressor performs highly stable operation in all rotation area and high power in high rotation area.

In addition, Hitachi compressor applies high efficient motor. The compressor values efficiency in low rotation area where operation frequency is high.
By these mechanisms, energy saving and high power operation have been achieved.

■ High Efficient Scroll Compressor

Hitachi scroll compressor achieves both energy saving and high power operation at the same time.

Whirlpool scroll shape has been improved to reduce efficiency loss during operation. Since two whirlpool wings operate induct, compress and exhaust process smoothly, the scroll is both powerful and efficient.

The scroll shape improvement also contributes to decrease refrigerant leakage loss.

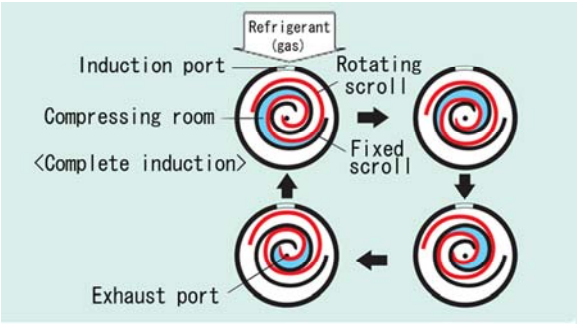

■ Heating Operation

- **Heating Capacity**

  Our new premium series can keep heating capacity up to outside temperature of -15℃.

- **Improvement of Unit Structure**

  Increase the area of outdoor heat exchanger to increase volume of air flow. Our new premium series' outdoor heat exchanger area is larger by more than 1.5 times compared to our previous model. This structure improvement contributes to decrease de-frost operation time and increases continuous heating operation time.

■ ECO Sensor

- **Detect Your Movement Level**

  Two compound lenses watch the movement level of people in the room to operate under less electricity consumption mode. The degree of detection is 140°.

  - When heating, if activity level is high, sensor detects the condition and automatically shifts room temperature lower to operate under less energy consumption mode.
  - When cooling, if activity level is low, sensor detects the condition and automatically shifts room temperature higher to operate under less electricity consumption mode.

Two Compound Lenses Watch Movement

- **Detect Your Location**

  Two compound lenses recognize the space of the room dividing into 3 sections to locate position of people in the room. Then, either direct airflow or in-direct airflow mode can be selected for your comfort.

Two Compound Lenses Watch 3 Areas

Direct Airflow or In-direct Airflow can be selected

■ Ionized Mist

• Keep Your Room Clean with Ionized Mist

An ion generator installed in the unit generates ultrafine nano-size ionized mist, which is carried throughout the room by the air from the air conditioner. This ionized mist surrounds and suppresses virus, bacteria and fungi by 99.99%, and also decomposes and removes odour.

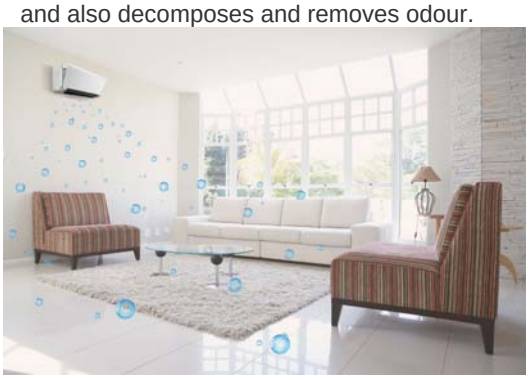

• Deodorizing Effects

The nano-sized ionized mist decomposes and removes cooking, cigarettes and pet odours, and even the odours ingrained into clothing or curtains.

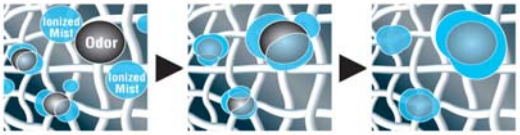

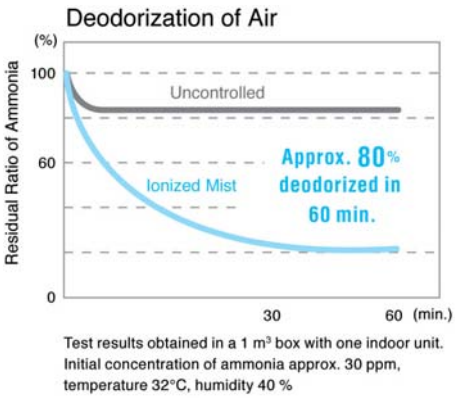

Test results obtained in a 1 m³ box with one indoor unit. Initial concentration of ammonia approx. 30 ppm, temperature 32°C, humidity 40 %

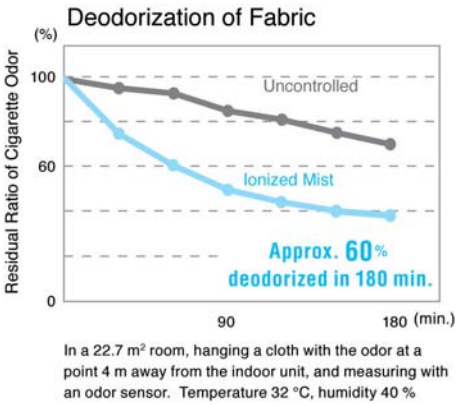

In a 22.7 m² room, hanging a cloth with the odor at a point 4 m away from the indoor unit, and measuring with an odor sensor. Temperature 32 °C, humidity 40 %

• Ionized Mist Generator

Applying the principle of beading on glass with iced water, inside the air conditioner water is produced from the air in the room. The water droplets are ionized with a high voltage, and emitted into the room. No water supply is necessary.

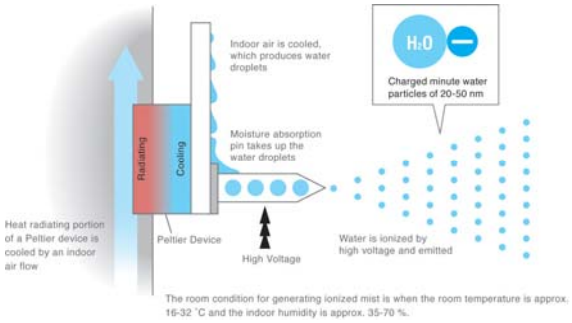

■ Stainless Clean

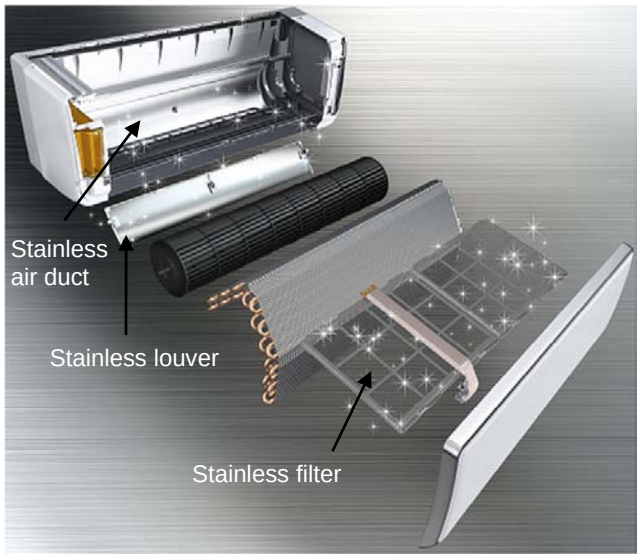

- **Dust Free**

Dust attachment tests have shown that 51% less dust sticks to stainless material than to plastic. Which means twice the cleanliness and half the cleaning time.

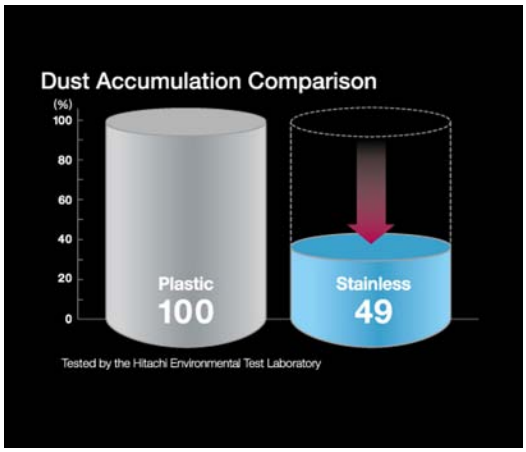

- **Sleek Surface**

Compared to conventional plastic material, stainless material has a flatter, sleeker surface that thoroughly prevents dust from sticking.

- **Less Static Electricity**

The static electricity often generated by friction between plastic surfaces and air passing through is the biggest cause of dust accumulating inside an air conditioner. Tests have proved that stainless steel generates almost no static electricity during operation and when the air conditioner is switched off.

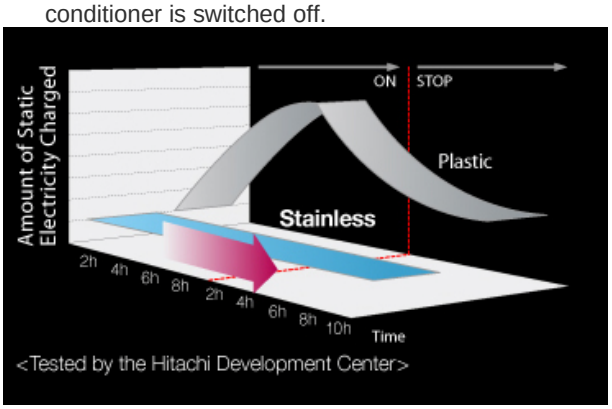

- **Easy to Clean**

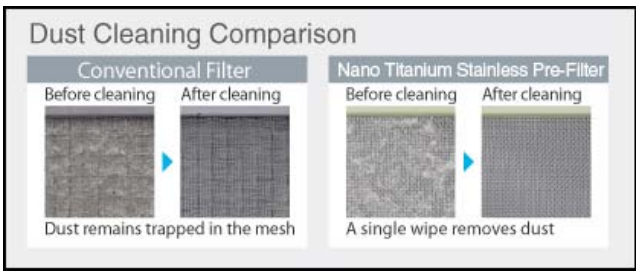

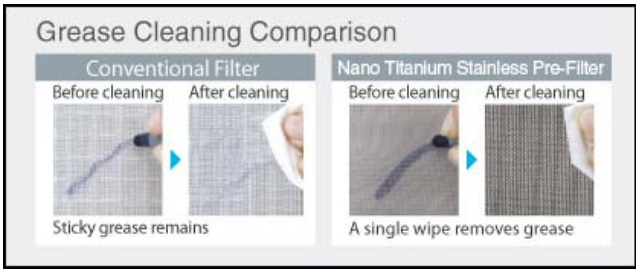

- **Micro Mesh Stainless Pre Filter**

Contamination resistant micro mesh stainless filter. Even greasy contaminants can be removed with a quick wipe. As it is stainless, it has a disinfection effect. With auto filter cleaning.

Micro Mesh Stainless Filter

Disinfection Mechanism of Stainless

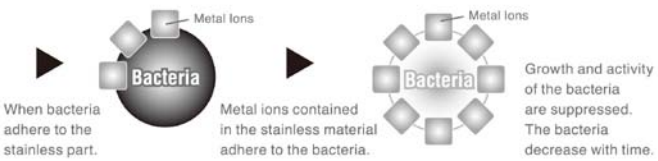

1.2.2 WALL TYPE

■ Quiet Operation

The trapezoidal blades cut the air diagonally to minimize air resistance, and conical blade fan ensures a high airflow.

The larger fan diameter can produced low noise yet higher airflow with slow rotation

New Conical blade fan

■ Efficient

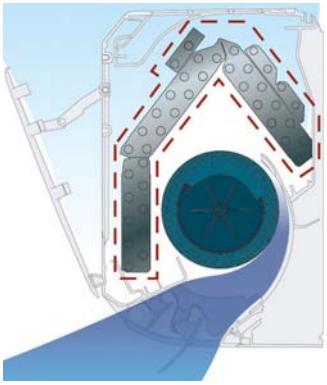

Lambda-shaped heat exchanger with advanced design for wide suction area and a high performance adjusts the room temperature quickly, achieving COP. The flat panel design grill and larger top suction area also increase the efficiency of heat exchange with the concentrated opening area, to improve the efficiency of air intake.

■ Wide Flow Anti-Bacterial Tangential Fan

The conical blade fan with less air resistance and bigger tangential fan draws a larger volume of air flow to distribute the cool air evenly and quietly.

It is also anti-bacterial treated to prevent bacterial and mold growth, ensuring only clean air is supplied for healthy living.

■ Plasma Air Purifying System

Equipped with a plasma ion unit to capture the finest and microscopic dust and eliminate bacteria.

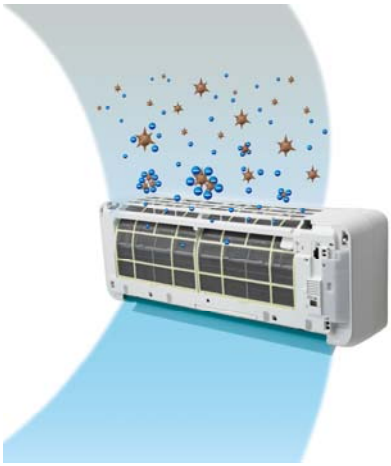

■ Powerful

Newly developed super big flap delivers air quickly to every corner of the room, and the powerful, sweeping airflow eliminated dead zones and improves the cooling and heating effect.

1.2.3 FLOOR TYPE

RAF-QXA, RAF-PXA

■ **Higher performance**

A lambda shaped design provides a larger and wider area for heat exchanger thus ensuring high performance.

Current model **Previous model**

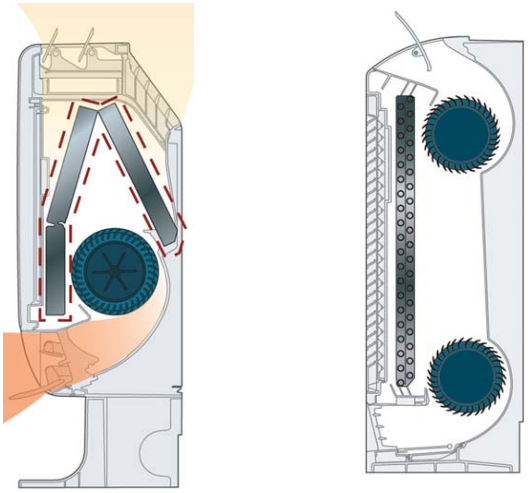

■ **Comfortable cooling and heating**

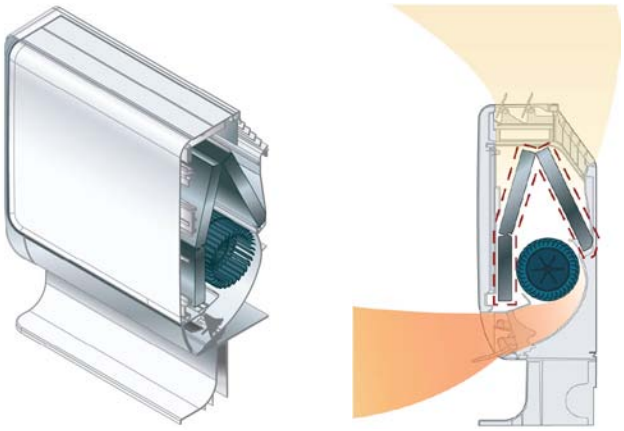

•Air Flow Control System (lower blowing type)

During heating mode, the warm air is directed to stay well controlled at floor level. Whereas during the cooling mode, cool air is distributed to the whole room to prevent direct cold blast onto the person body.

■ **Extended Air Flow**

With dynamic extended airflow, the airflow could reach further to the corners of the room. Your room can be efficiently warmed or cooled with conveniently simple push of button on the remote control.

RAF-RPA

■ **Comfortable**

Large and gentle air flow is generated by the larger upper blades, achieving efficient air-conditioning.

■ **High performance**

The larger blade fan than normal rotates sufficient airflow slowly, thus achieving high efficiency and low noise

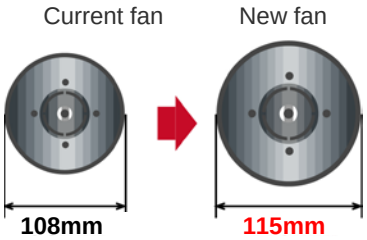

■ **Easy Cleaning**

You can remove Stainless pre-filter easily for washing or you can clean directly by vacuum cleaner. The filter catch 3 times more dust due to its wave shape, so you do not have to clean so often.

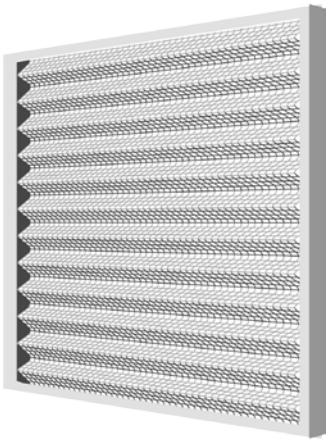

1.2.4 4 WAY CEILING CASSETTE TYPE

■ **Silent**

Noise level is just 25dB (Sleep mode) thanks to the 3D-twisted wing design of the compact turbo-fan.

.

■ **Automatic Swing Louver**

Optionally, this unit is equipped with an automatic swing louver to ensure even distribution of conditioned air to the entire room.

■ **4 -Way Airflow**

It can be selected among 2-way, 3-way or 4-way operation.

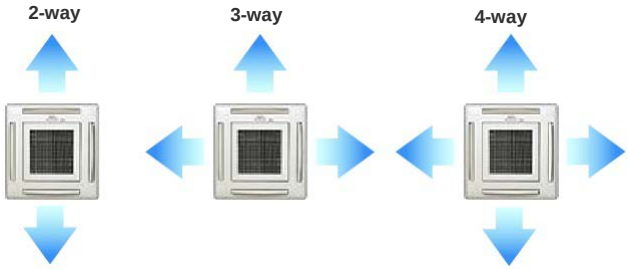

■ **Fits into a 600mm x 600mm ceiling module**

Thanks to compact design, it neatly fits inside a standard module and requires less installation work

■ **One-touch panel**

The panel can be swung open up to 90° with just one push so that the filter can be removed for cleaning.

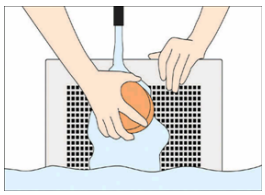

Grill can be removed for cleaning

■ **Built-in Drain Pump**

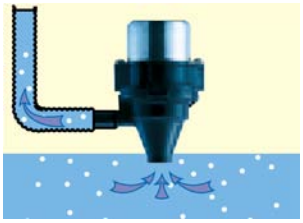

The air conditioner is equipped with an internal drain pump to remove accumulated condensed water from drain pan even while it is operating. A float switch monitors the water level and automatically activates the pump as necessary

■ **Elegant Design**

The gently contoured standard air panel is less than 4 cm. It is tastefully designed to blend with any interior while delivering a maximum flow of air. The 32 cm profile of the hidden ceiling unit is low enough to allow unfettered installation in almost any building.

1.2.5 DUCT TYPE

RAD-RPA

■ Quiet Operation

The free duct enables the air inlet and outlet layout system to be freely chosen depending on the building structure and room width, thus keeping your room looking beautiful.

Unlike conventional units, the noise level has been reduced to an exceptionally low 30dB-A (1.0HP unit, Low position). Ideal wherever quiet operation is important.

■ Neatly installable in any room

Duct length is extendable for up to 4m. High-pressure switch setting delivers sufficient air conditioning even by duct installation.

Variation in installation

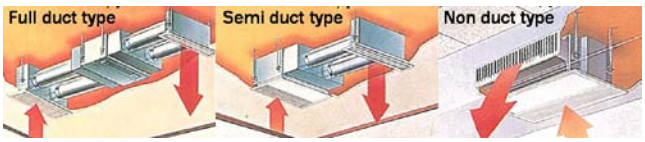

■ Built-in drain pump

This air conditioner is equipped with an internal drain pump to remove accumulated condensed water from the drain pan even while it is operating. A float switch monitors the water level and automatically activates the pump as necessary.

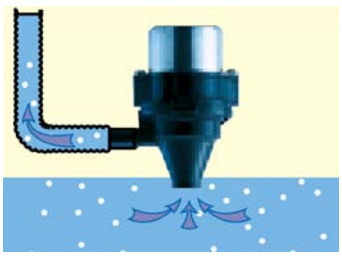

■ Removable Pre-filter and selectable air inlet

Semi-duct type

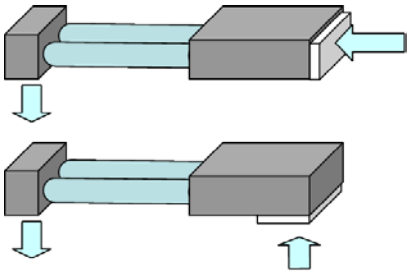

Non-duct type

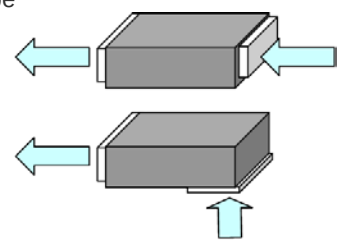

Air inlet is selectable

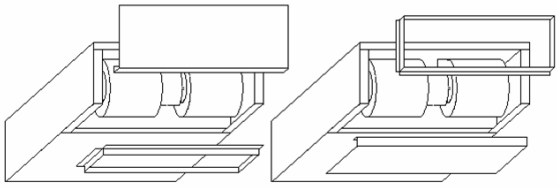

Pre-filter is removable

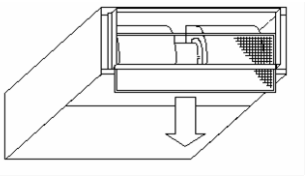

Static pressure & Air flow

RAD-18RPA / RAD-25RPA

COOLING

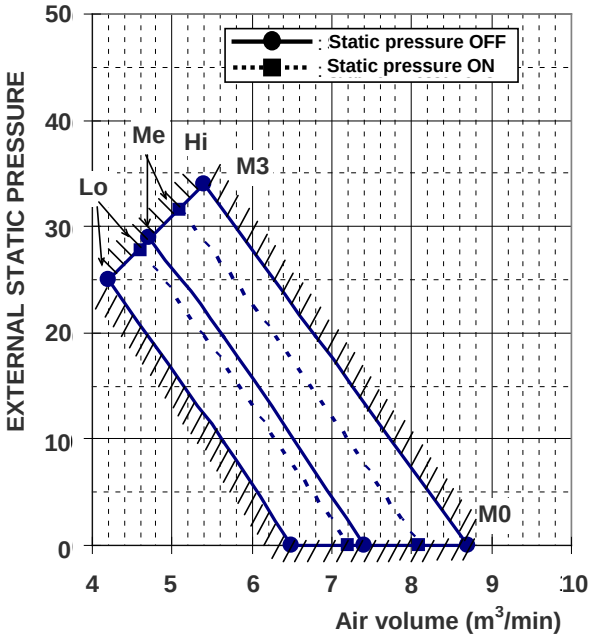

HEATING

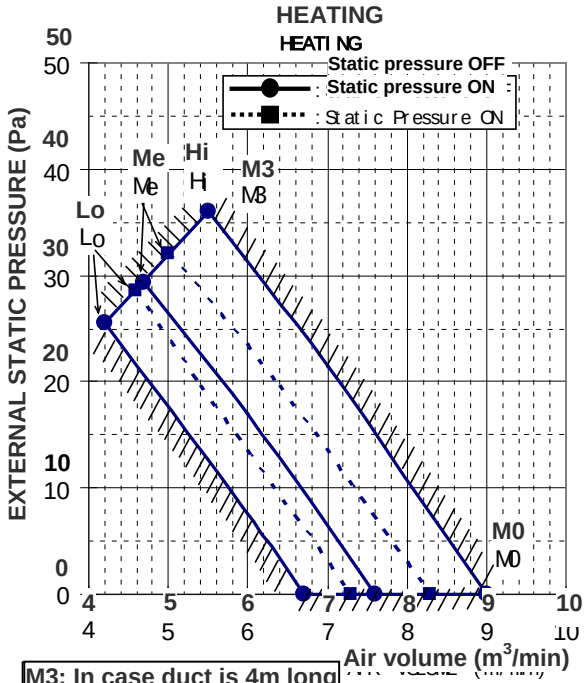

M3: In case duct is 4m long
M0: For non duct type

RAD-35RPA / RAD-50RPA

COOLING

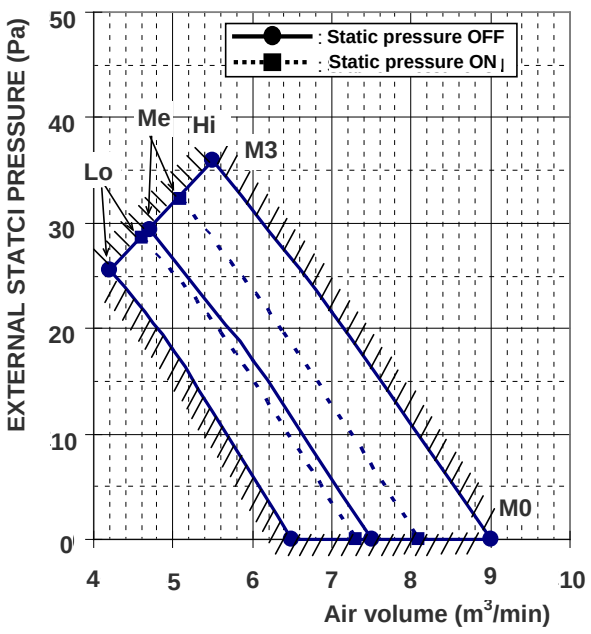

HEATING

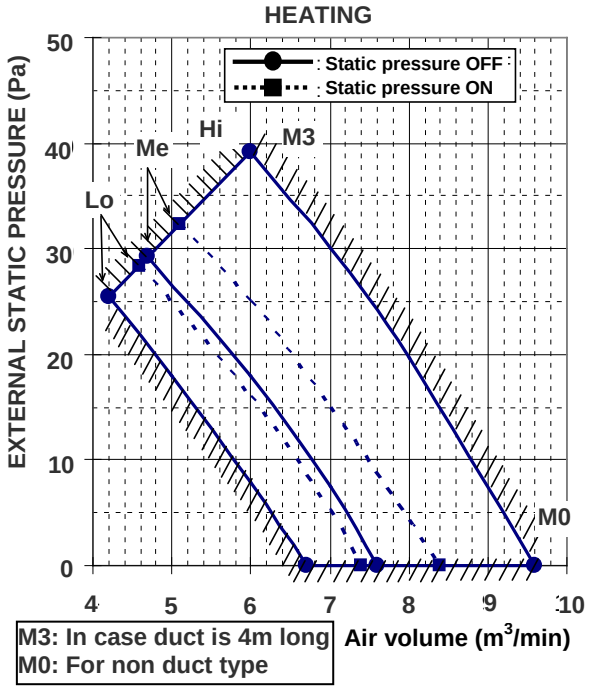

M3: In case duct is 4m long
M0: For non duct type

RAD-PPA

■ Neatly installable in any room

High-pressure switch setting delivers sufficient air conditioning even by duct installation.

Variation in installation

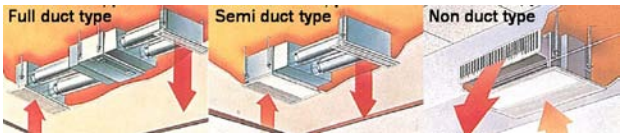

Removable Pre-filter and selectable air inletSemi-duct type

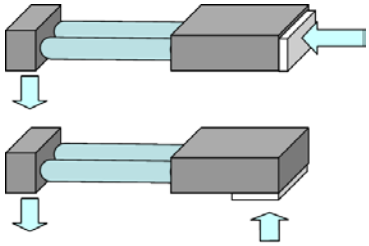

Non-duct type

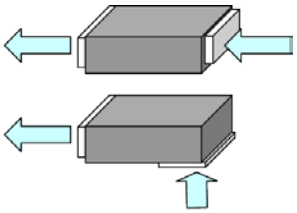

Air inlet is selectable

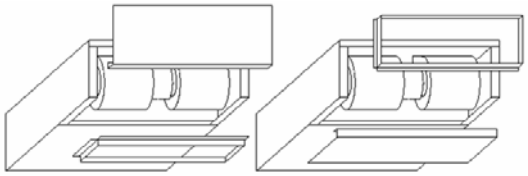

Pre-filter is removable

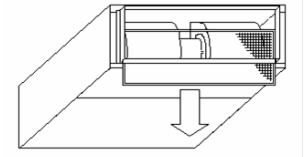

■ Static pressure & Air flow

RAD-50PPA / RAD-60PPA

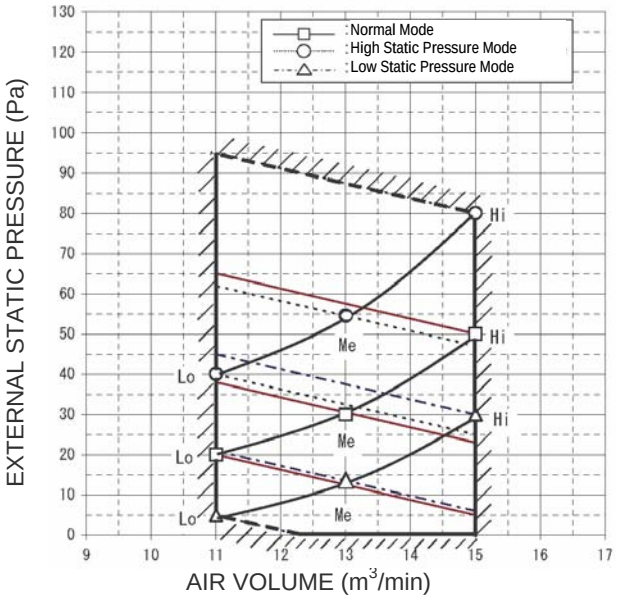

RAD-70PPA

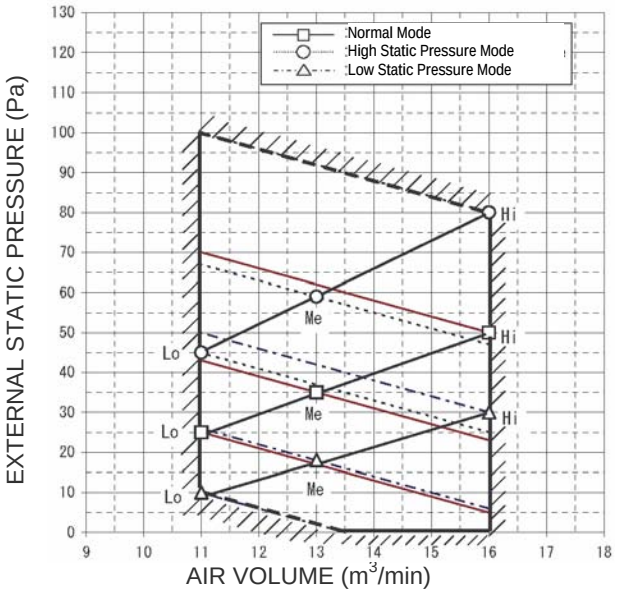

1.2.6 FILTERS

■ Nano Titanium Wasabi Air Purifying Filter

- **How Nano Titanium works**

  Incredibly small (about 5nm) and highly dense WASABI modified Nano Titanium particles prevent microbes from going through and deactivate them actively.

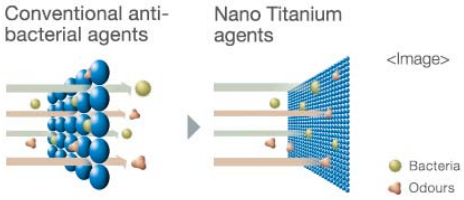

- **Principle of Nano Titanium's Action**

  The TiO_2 catalyst has a bacteria deactivation and deodorizing effect.

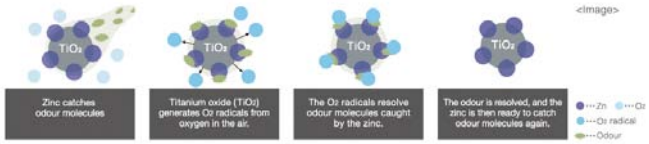

- **Antibacterial**

  Hitachi's new Nano Titanium Wasabi Air Purifying Filter has been proven to effectively deactivate over 99% of bacteria.

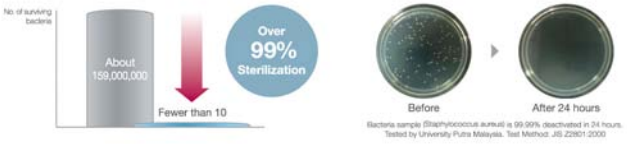

- **Anti-Allergen**

  The Nano Titanium Wasabi Air Purifying Filter effectively deactivates harmful allergens such as dust mites and formaldehyde, which may cause allergic diseases such as asthma.

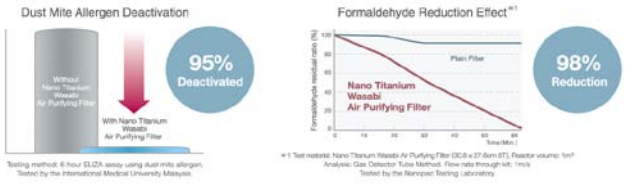

- **Odour Removal**

  The Nano Titanium Wasabi Air Purifying Filter thoroughly deodorizes air. Up to 82% removal in only an hour.

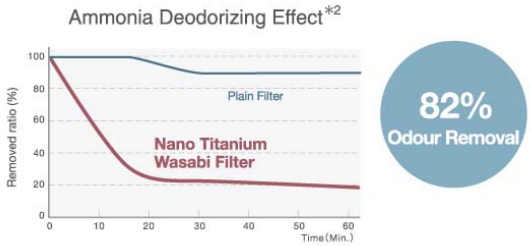

*2 Test material: Nano Titanium Wasabi Air Purifying Filter (30.8 x 27.6cm 5T), Reactor volume: 1m³
Analysis: Gas Detector Tube Method. Flow rate through kit: 1m/s
Tested by the Nanopac Testing Laboratory

- **Powerful WASABI Sanitizing**

  May seem surprising, the WASABI often seen with Sushi has a powerful sanitizing effect. Hitachi's unique Nano Titanium WASABI filter is coated with WASABI modified Nano Titanium particles to firmly catch and deactivate bacterial, allergen, mold and odour.

■ Nano Stainless Pre-Filter

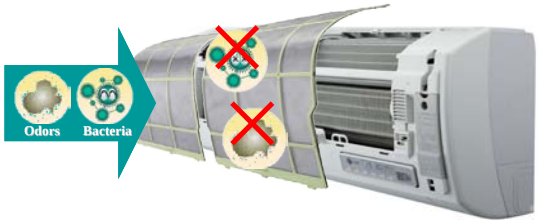

Conventional filter

Before cleaning After cleaning

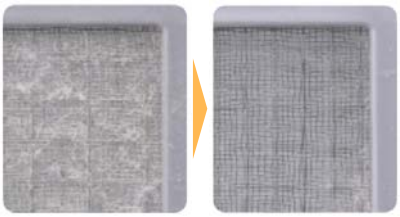

Dirt still clings to the filter

Nano Stainless Pre Filter

Before cleaning After cleaning

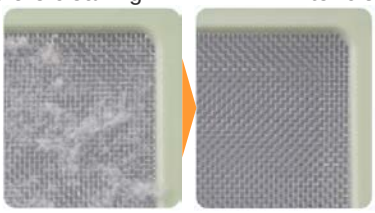

Dirt totally removed.
Looking brand new.

■ Washable Anti Bacteria Pre-Filter

Static electricity and carbon absorb micro dust, pollen particles and odors, and the pre-filter can be washed and re-used up to 20 times.

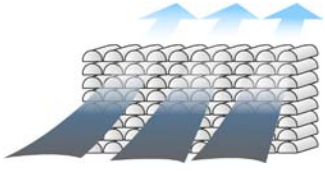

Breathing structure. Micro-level dust is absorbed by static electricity

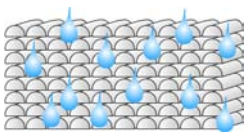

Reusable after washing

■ FILTER INFORMATION

MODEL	AIR PURIFYING FILTER				PRE-FILTER		
	STANDARD		OPTIONAL		STANDARD	OPTIONAL	
	CODE	DESCRIPTION	CODE	DESCRIPTION	DESCRIPTION	CODE	DESCRIPTION
RAK-18QXA	SPX-CFH22	Wasabi Nano Titanium Filter			Nano Stainless		
RAK-25QXA	SPX-CFH22	Wasabi Nano Titanium Filter			Nano Stainless		
RAK-35QXA	SPX-CFH22	Wasabi Nano Titanium Filter			Nano Stainless		
RAK-50QXA	SPX-CFH22	Wasabi Nano Titanium Filter			Nano Stainless		
RAK-18QPA	SPX-CFH22	Wasabi Nano Titanium Filter			Washable	SPX-SPF5	Stainless
RAK-25QPA	SPX-CFH22	Wasabi Nano Titanium Filter			Washable	SPX-SPF5	Stainless
RAK-35QPA	SPX-CFH22	Wasabi Nano Titanium Filter			Washable	SPX-SPF5	Stainless
RAK-50QPA	SPX-CFH23	Wasabi Nano Titanium Filter			Washable	SPX-SPF5	Stainless
RAI-25RPA			SPX-NTW1	Wasabi Nano Titanium Filter	Washable		
RAI-35RPA			SPX-NTW1	Wasabi Nano Titanium Filter	Washable		
RAI-50RPA			SPX-NTW1	Wasabi Nano Titanium Filter	Washable		
RAD-18RPA					Washable		
RAD-25RPA					Washable		
RAD-35RPA					Washable		
RAD-50RPA					Washable		
RAF-25QXA	SPX-CFH15	Non-Washable Nano Titanium Filter			Nano Stainless		
RAF-35QXA	SPX-CFH15	Non-Washable Nano Titanium Filter			Nano Stainless		
RAF-50QXA	SPX-CFH15	Non-Washable Nano Titanium Filter			Nano Stainless		
RAF-25RPA	SPX-CFH15	Non-Washable Nano Titanium Filter			Stainless		
RAF-35RPA	SPX-CFH15	Non-Washable Nano Titanium Filter			Stainless		
RAF-50RPA	SPX-CFH15	Non-Washable Nano Titanium Filter			Stainless		
RAK-18PSA			SPX-CFH22	Wasabi Nano Titanium Filter	Micro Mesh Stainless		
RAK-25PSA			SPX-CFH22	Wasabi Nano Titanium Filter	Micro Mesh Stainless		
RAK-35PSA			SPX-CFH22	Wasabi Nano Titanium Filter	Micro Mesh Stainless		
RAK-18PSAN			SPX-CFH22	Wasabi Nano Titanium Filter	Micro Mesh Stainless		
RAK-25PSAN			SPX-CFH22	Wasabi Nano Titanium Filter	Micro Mesh Stainless		
RAK-35PSAN			SPX-CFH22	Wasabi Nano Titanium Filter	Micro Mesh Stainless		
RAK-18PSPA			SPX-CFH22	Wasabi Nano Titanium Filter	Washable	SPX-SPF6	Stainless
RAK-25PSPA			SPX-CFH22	Wasabi Nano Titanium Filter	Washable	SPX-SPF6	Stainless
RAK-35PSPA			SPX-CFH22	Wasabi Nano Titanium Filter	Washable	SPX-SPF6	Stainless

MODEL	AIR PURIFYING FILTER				PRE-FILTER		
	STANDARD		OPTIONAL		STANDARD	OPTIONAL	
	CODE	DESCRIPTION	CODE	DESCRIPTION	DESCRIPTION	CODE	DESCRIPTION
RAK-25PXA	SPX-CFH22	Wasabi Nano Titanium Filter			Nano Stainless		
RAK-35PXA	SPX-CFH22	Wasabi Nano Titanium Filter			Nano Stainless		
RAK-50PXA	SPX-CFH22	Wasabi Nano Titanium Filter			Nano Stainless		
RAK-18PPA	SPX-CFH22	Wasabi Nano Titanium Filter			Washable	SPX-SPF6	Stainless
RAK-25PPA	SPX-CFH22	Wasabi Nano Titanium Filter			Washable	SPX-SPF6	Stainless
RAK-35PPA	SPX-CFH22	Wasabi Nano Titanium Filter			Washable	SPX-SPF6	Stainless
RAK-50PPA	SPX-CFH22	Wasabi Nano Titanium Filter			Washable	SPX-SPF5	Stainless
RAK-60PPA	SPX-NTW1	Wasabi Nano Titanium Filter			Washable	SPX-SPF3	Stainless
RAK-70PPA	SPX-NTW2	Wasabi Nano Titanium Filter			Washable	SPX-SPF4	Stainless
RAK-18PEA			SPX-CFH22	Wasabi Nano Titanium Filter	Washable	SPX-SPF6	Stainless
RAK-25PEA			SPX-CFH22	Wasabi Nano Titanium Filter	Washable	SPX-SPF6	Stainless
RAK-35PEA			SPX-CFH22	Wasabi Nano Titanium Filter	Washable	SPX-SPF6	Stainless
RAK-50PEA			SPX-CFH22	Wasabi Nano Titanium Filter	Washable	SPX-SPF6	Stainless
RAF-25PXA	SPX-CFH15	Non-Washable Nano Titanium Filter			Nano Stainless		
RAF-35PXA	SPX-CFH15	Non-Washable Nano Titanium Filter			Nano Stainless		
RAF-50PXA	SPX-CFH15	Non-Washable Nano Titanium Filter			Nano Stainless		
RAD-50PPA					Washable		
RAD-60PPA					Washable		
RAD-70PPA					Washable		

1.3 SYSTEM CONTROL FEATURES

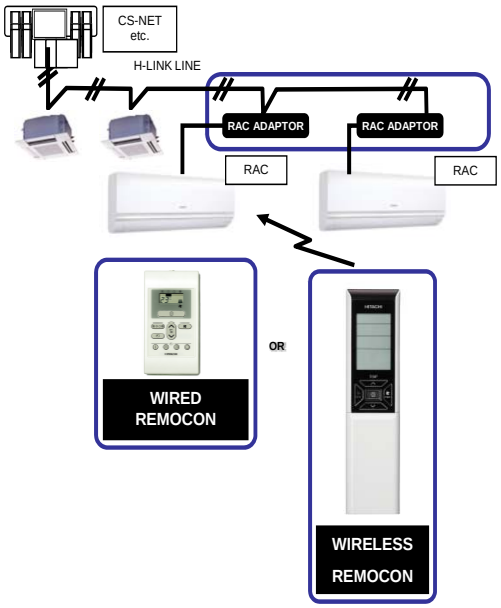

■ H-link connection(optional)

The optional H-link adaptor is available if connection of the RAC to the CS-NET via the H-link system is required.

Model	Remote controller			RAC Adaptor
	Standard	Optional (either one)		Optional
RAK-18QXA RAK-25QXA RAK-35QXA RAK-50QXA	RAR-5E2	SPX-RCDB (RAR-5G2)		YES
RAK-18QPA RAK-25QPA RAK-35QPA RAK-50QPA	RAR-5E1			
RAI-25RPA RAI-35RPA RAI-50RPA	RAR-5E2			
RAF-25RPA RAF-35RPA RAF-50RPA	RAR-5E2			
RAF-25QXA RAF-35QXA RAF-50QXA	RAR-5E4			
RAD-18RPA RAD-25RPA RAD-35RPA RAD-50RPA	-	SPX-RCDA (RAR-5G1)	SPX-RCKA (RAR-5E5)	
RAK-18PSA RAK-25PSA RAK-35PSA	RAR-5J1	NO		
RAK-18PSAN RAK-25PSAN RAK-35PSAN	RAR-5J2			
RAK-18PSPA RAK-25PSPA RAK-35PSPA	RAR-5E2	SPX-RCDB (RAR-5G2)		
RAK-18PPA RAK-25PPA RAK-35PPA	RAR-5E2			
RAK-50PPA	RAR-5E1			
RAK-60PPA	RAR-5E2			

Model	Remote controller			RAC Adaptor
	Standard	Optional (either one)		Optional
RAK-70PPA	RAR-5E1	SPX-RCDB (RAR-5G2)		YES
RAK-25PXA RAK-35PXA RAK-50PXA	RAR-5E3			
RAK-18PEA RAK-25PEA RAK-35PEA RAK-50PEA	RAR-5F1			
RAF-25RPA RAF-35RPA RAF-50RPA	RAR-5E2			
RAF-25PXA RAF-35PXA RAF-50PXA	RAR-5E4			
RAD-50PPA RAD-60PPA RAD-70PPA	-	SPX-RCDA (RAR-5G1)	SPX-RCKA (RAR-5E5)	

■ Distributor – SPX-DST1 (optional)

The optional distributor is to be used together with the wired remote controller when there is a need to centralize the control of multiple indoor units using only a single wired remote controller.

A single distributor could be connected further to 3 separate distributors so that up to 13 units of indoor could be controlled by a single wired remote controller.

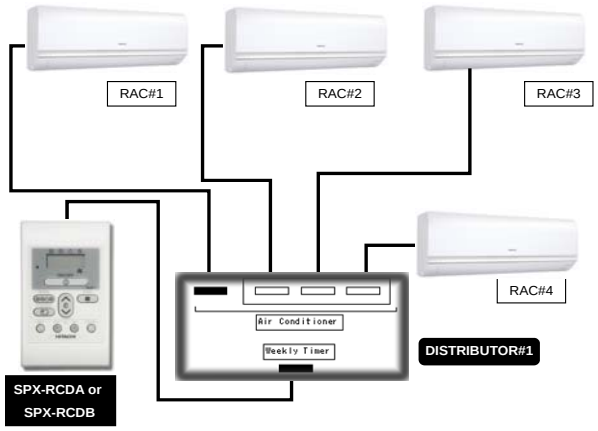

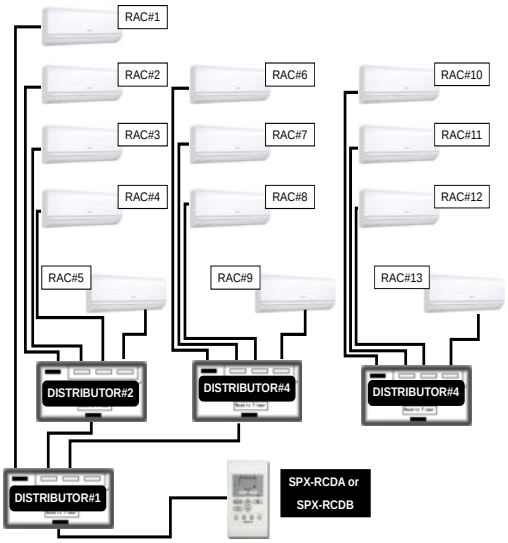

1.3.1 NEW WIRELESS REMOTE CONTROLLER WITH WEEKLY TIMER

■ **Weekly Timer Usages**

- 2 modes can be set (e.g. Mode A for Summer season and Mode B for Winter season). So, does not need to shuffle all set by seasons.
- A maximum of 6 timer settings can be set for each day.
- On/Off time and temperature can be set.
- The sequence of ON mode setting with different temperature set is possible. This may prevent users from forgetting turn off the unit when nobody is in the house.
- Operation mode is automatically set to latest operated mode. So it is recommended to operate suitable mode once (e.g. cooling or heating) before setting Weekly Timer.

Example of "Mode A" for Summer season:

	Mon	Tue	Wed	Thu	Fri	Sat	Sun
6:00	❶ ON / 25°C	ON / 25°C	ON / 25°C	ON / 25°C	ON / 25°C	❶ ON / 27°C	
8:00	❷ OFF	OFF	OFF	OFF	OFF		
10:00						❷ OFF	
12:00	❸ ON / 27°C	ON / 27°C	ON / 27°C	ON / 27°C	ON / 27°C		
14:00	❹ OFF	OFF	OFF	OFF	OFF		
16:00							
18:00	❺ ON / 27°C	ON / 27°C	ON / 27°C	ON / 27°C	ON / 27°C	❸ ON / 27°C	
20:00							
22:00	❻ OFF	OFF	OFF	OFF	OFF	❹ OFF	

Example of "Mode B" for Winter season:

	Mon	Tue	Wed	Thu	Fri	Sat	Sun
6:00	❶ ON / 23°C	ON / 23°C	ON / 23°C	ON / 23°C	ON / 23°C	❶ ON / 23°C	
8:00	❷ OFF	OFF	OFF	OFF	OFF		
10:00						❷ ON / 20°C	
12:00	❸ ON / 20°C	ON / 20°C	ON / 20°C	ON / 20°C	ON / 20°C		
14:00	❹ OFF	OFF	OFF	OFF	OFF		❶ OFF
16:00						❸ ON / 21°C	
18:00	❺ ON / 20°C	ON / 20°C	ON / 20°C	ON / 20°C	ON / 20°C	❹ ON / 22°C	
20:00							
22:00	❻ OFF	OFF	OFF	OFF	OFF	❺ OFF	❷ OFF

■ Leave Home (LH)

Prevent the room temperature from falling too much by setting temperature 10°C automatically when no one is at home.

This operation is able to operate by "Continuous operation" or "Day timer operation". Please use "Day timer operation" to set the number of days up to 99 days.

Day Timer Operation (When duration is set)

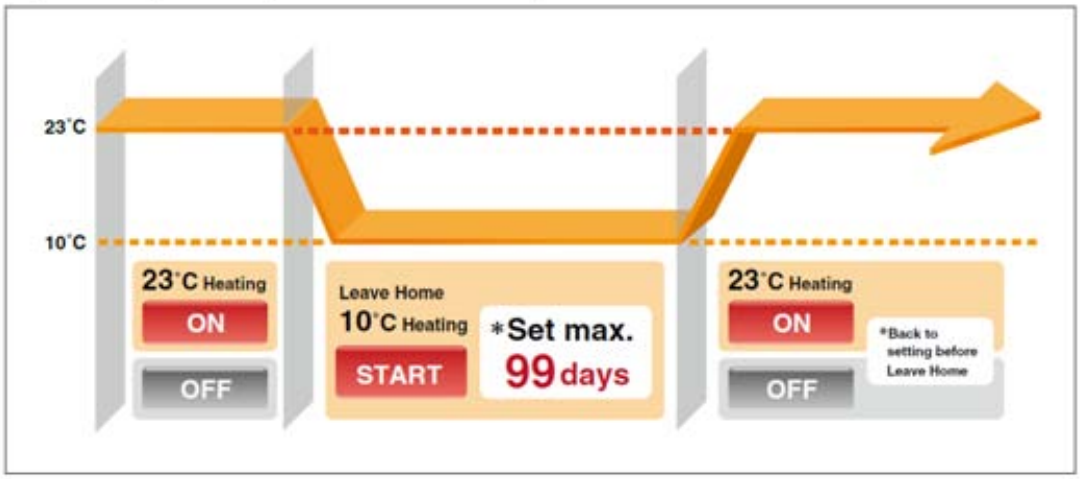

- After reaching the set days of Leave Home, mode back to the setting before Leave Home operation.
- Depend on outside temperature (weather) or house condition room temperature may not reach to 10°C.

Continuous Operation (When duration is not set)

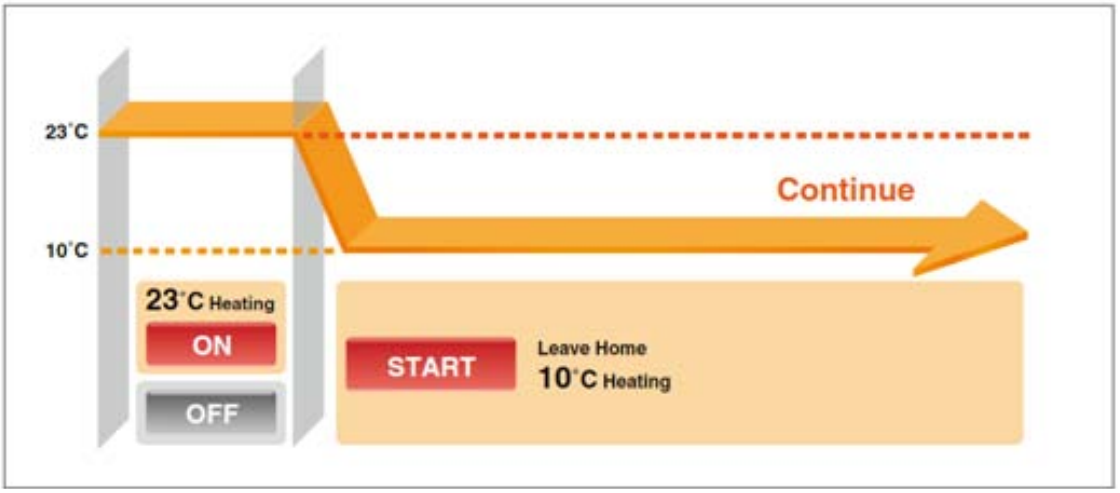

- Depend on outside temperature (weather) or house condition; room temperature may not reach to 10°C.

■ Info

By pressing INFO button, temperature around remote controller and monthly power consumption will be displayed on the remote controller.

■ INFO

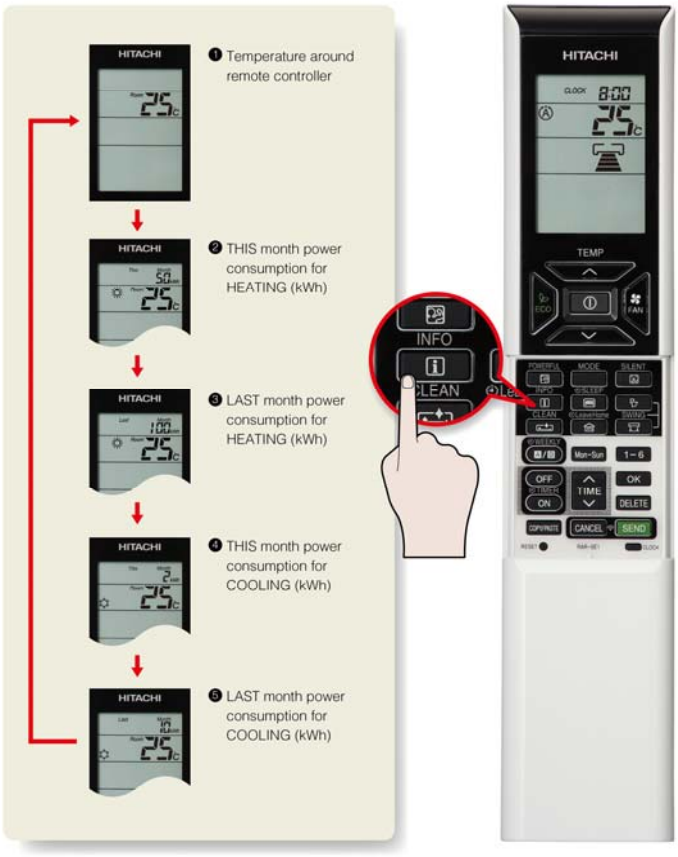

■ ECO

ECO operation is an energy saving function by changing set temperature automatically and by limiting the maximum power consumption value.

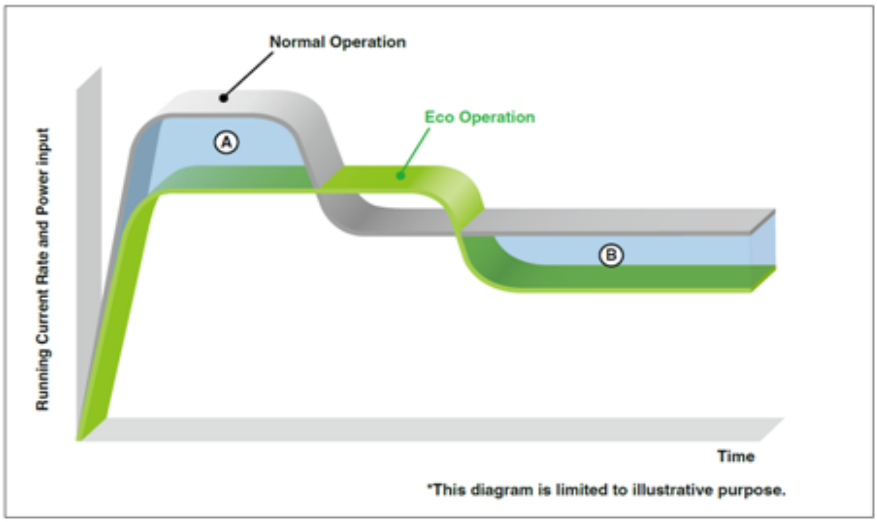

- **Eco Mode Principle**
  When Eco mode is set from the beginning, keep compressor rotation rate lower than normal operation and slightly shift set temperature to save energy consumption Ⓐ.
  If Eco mode is set during other operations, then set temperature is slightly shifted to save energy.
  By shifting set temperature, Eco mode can save energy consumption even better reaching set temperature Ⓑ.
  Energy consumption value is depended on outside temperature, in house temperature, set temperature or type of air conditioning unit.

- **Eco Sleep Timer**
  The timer can be set up to duration of 7 hours.
  By pressing SLEEP button during AUTO, HEATING, DEHUMIDIFYING, COOLING and FAN operation, the unit shifts the room temperature and reduces the fan speed. It results in energy saving.

  When sleep timer is set, indoor fan speed will be reduced to operate under silent mode.
  After 30 minutes, outdoor fan speed will also be decreased.
  After 1 hour, set temperature will be slightly shifted.
  Sleep timer can be set for 1, 2, 3, 7 hours.

Cooling operation

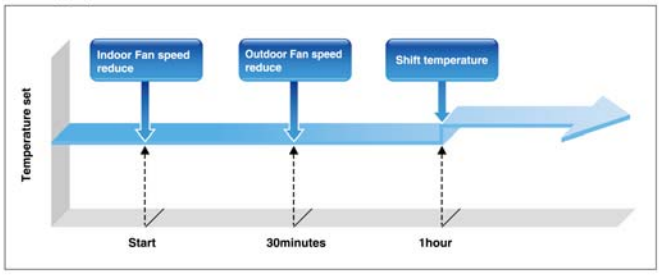

Heating operation

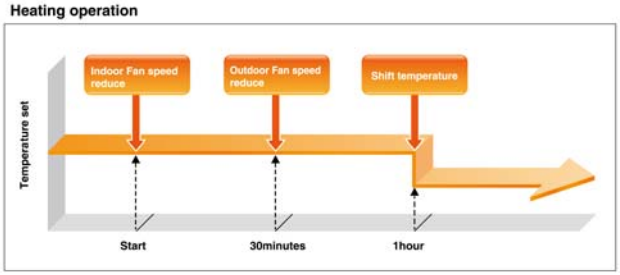

1.3.2 ADDITIONAL FUNCTION VIA DIP-SWITCH SETTINGS

A new DIP Swtich is available on the PWBs of the indoor unit that provide additional functions via the settings on the switches.

Applicable Model	DIP SW Label
RAK-18/25/35PSPA	DSW1
RAK-25/35/50PXA	DSW1
RAK-18/25/35PPA	DSW1
RAK-50/60/70PPA	SW501
RAK-18/25/35/50PEA	DSW1
RAK-18/25/35/50QXA	DSW1
RAK-18/25/35/50QPA	SW501
RAF-25/35/50PXA	DIP-SW
RAF-25/35/50QXA	DIP-SW
RAF-25/35/50RPA	DSW1
RAD-25/35/50RPA	SW501
RAD-50/60/70PPA	SW501
RAI-25/35/50RPA	SW501

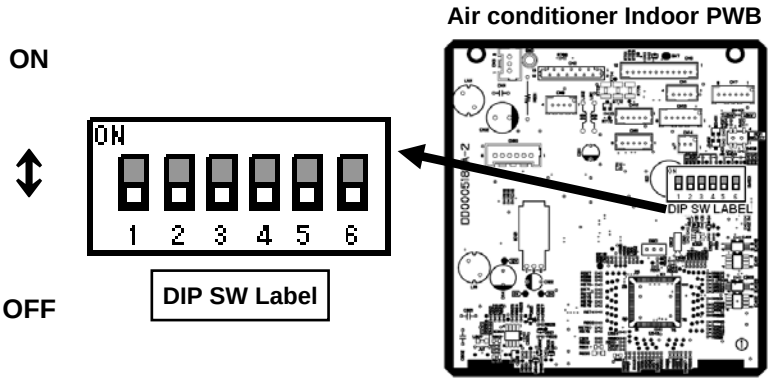

Pin No.	Function	Switch Position / Setting					
1	AUTO RESTART function	OFF	Enable	ON	Disable		
2	DRY CONTACT function	OFF	Disable	ON	Enable		
3	DRY CONTACT Logic Select	OFF	HI Input Active	ON	LO Input Active		
4	HEATING / COOLING ONLY MODE SELECT	OFF	NORMAL (HEAT AND COOL)	OFF	HEATING ONLY	ON	COOLING ONLY
5		OFF		ON		OFF	
6	REMOCON ID SELECT	OFF	SELECT ID A	ON	SELECT ID B		

A. Pin No. 1: Auto Restart Function
The AUTO RESTART function can be enabled or disabled by setting Pin No. 1 on the DIP SWITCH above to the ON or OFF position accordingly.

B. Pin No. 2 & 3: Dry Contact Function
Please refer to this chapter section **1.3.3 DRY CONTACT APPLICATION (USING DIP SWITCH)** for more details

C. Pin No.4 & 5: Operation Mode Selection Lock (Heating/Cooling Only Mode Select)
When this function is enabled, the operation mode could be locked to either Heating Only (Heating or Fan) or Cooling Only (Cooling, Fan or Dehumidifying) by setting the Pin No. 4 and 5 accordingly.

LOCKED MODE	REMARKS
HEATING ONLY	Unit will not enter into Cooling mode although cooling mode is selected using the remote controller.
COOLING ONLY	Unit will not enter into Heating mode although heating mode is selected using the remote controller.

D. Pin No.6: Remocon ID Select (to prevent mutual interference of communication signal)
This function is used for selecting the ID communication channel between the wireless remote controller and indoor unit. After setting the ID channel on the pin No. 6, the wireless remote controller also *need* to be changed to corresponding same ID communication channel to ensure correct communication.

Applicable models	Reference for changing ID channel on the wireless remote controller
RAK-18/25/35PPA RAF-50RPA	Chapter **9.1.1.4 SETTING THE PREVENTION OF MUTUAL INTERFERENCE**
RAK-18/25/35/50PEA	Chapter **9.1.3.2 SETTING THE PREVENTION OF MUTUAL INTERFERENCE**

Note: As for other models that do not utilize this Pin No.6 of this DIP Switch

Please refer to Chapter **9.1.1.4 SETTING THE PREVENTION OF MUTUAL INTERFERENCE** for other applicable models below on how to change ID communication channel by using wireless weekly remote controller

Applicable models				
RAK-18/25/35PSPA	RAK-18/25/35/50QXA	RAF-25/35/50PXA	RAD-25/35/50RPA	RAI-25/35/50RPA
RAK-25/35/50PXA	RAK-18/25/35/50QPA	RAF-25/35/50QXA	RAD-50/60/70PPA	
RAK-50/60/70PPA		RAF-25/35RPA		

Please refer to Chapter **9.1.2.2 SETTING THE PREVENTION OF MUTUAL INTERFERENCE** for other applicable models below on how to change ID communication channel by using wireless remote controller :

Applicable models	
RAK-18/25/35PSA	RAK-18/25/35PSAN

1.3.3 DRY CONTACT APPLICATION (USING DIP SWITCH)

The dry contact system enables the operation of the air conditioner indoor unit to be controlled by using external dry contacts (with non voltage) such as card-key controller or window for facilities such as hotels.

Table 1 (Applicable models and related information)

Optional Connecting cord Accessory SPX-WDC#		Model	DIP SW Label	CN#
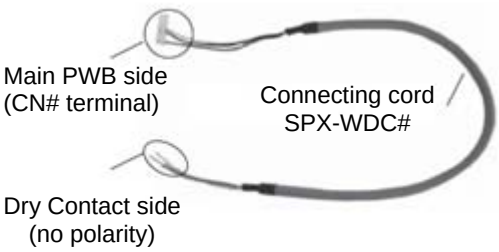	SPX-WDC1	RAK-18/25/35PSPA	DSW1	CN6
		RAK-25/35/50PXA	DSW1	CN6
		RAK-18/25/35PPA	DSW1	CN6
		RAK-50/60/70PPA	SW501	CN6
		RAK-18/25/35/50PEA	DSW1	CN6
		RAK-18/25/35/50QXA	DSW1	CN6
		RAK-18/25/35/50QPA	SW501	CN6
		RAF-25/35/50PXA	DIP-SW	CN6
		RAF-25/35/50QXA	DIP-SW	CN6
		RAF-25/35/50RPA	DSW1	CN6
	SPX-WDC2	RAD-25/35/50RPA	SW501	CN9
		RAD-50/60/70PPA	SW501	CN9
		RAI-25/35/50RPA	SW501	CN9

Note:
1) DRY CONTACT function is "Enable" by set pin No. 2 of the DIP SWITCH (refer to table 1 for the label) to ON position.
2) Select the proper setting for DRY CONTACT LOGIC INPUT pin No. 3 on DIP SWITCH (refer to Table 1 for the label)
   i) Set to OFF position (Hi Input) if the type of Dry Contact switch to be used (for the CARD KEY UNIT or Window) is of contact type a (Normally Open Type) as shown in below diagram.
   ii) Set to ON position (Lo Input) if the type of Dry contact switch to be used (for the CARD KEY UNIT or Window) is of contact type b (Normally Close Type) as shown in below diagram.

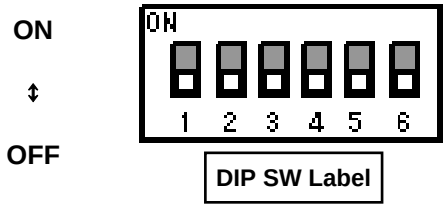

Pin No.	Function	Switch Position / Setting			
2	DRY CONTACT function	OFF	Disable	ON	Enable
3	DRY CONTACT Input Logic	OFF	HI Input Active	ON	LO Input Active

- Please decide the type of dry contact you will be using and set the position of the DIP Switch No. 2 and 3 accordingly

[1] CHECK DRY CONTACT OF CARD KEY UNIT

	AIR CONDITIONER Standby	AIR CONDITIONER Operating
CARD KEY (Door Switch)	REMOVE 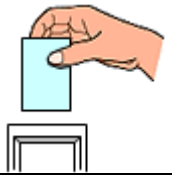	INSERT 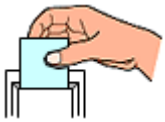
Contact type a	OPEN	CLOSE
Contact type b	CLOSE	OPEN

[2] SET THE POSITION OF DIP SWITCH

POSITION CONDITION OF DIP SWITCH	
INITIAL CONDITION (CARD KEY NO USE) 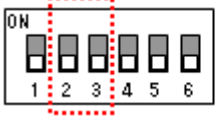	No.2 : OFF No.3 : OFF
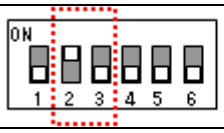	**HI Input Active** No.2 : ON No.3 : OFF
	LO Input Active No.2 : ON No.3 : ON

After all connection has been done as below diagram, ON the breaker and push ON button of wireless remote controller or wired remote controller to operate the air conditioner unit.

- When the CARD KEY is in insert condition, the air conditioner operation is allowable by remote controller.
- When the dry contact switch on the Card Key Unit is open (refer to diagram below for contact type a), the unit stops to operate (it takes 10 seconds to stop the unit operation after the dry contact switch on the card key turns off) and vice versa.
- When the card key is removed from the Card Key Unit, the wireless remote controller cannot be used.
- When the card key is removed from the Card Key Unit, the wired remote controller LCD display is activated; however it has no control over the unit.
- The suitable accessory Connecting Cord (accessory code#: SPX-WDC1 or SPX-WDC2) need to be used to connect the Card Key Unit's dry contact switch to the connector on the control board of the indoor unit. Please refer to Table 1 to select suitable accessory code# for the concerning indoor model.

Example of wiring connection to Card Key Unit will be as below (reference only)

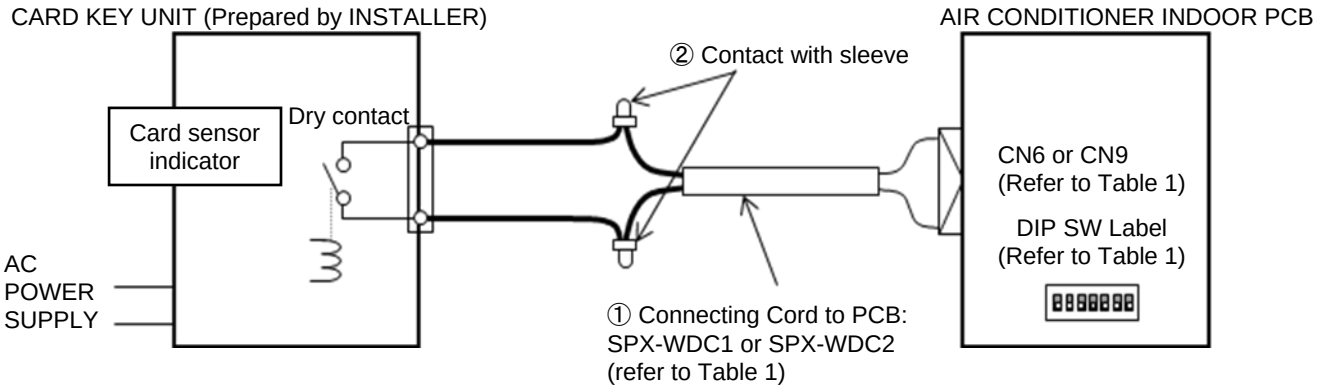

- CONNECTION EXAMPLE

i. Pin No. 3 of DIP SWITCH is set to OFF position (HI Input Active) for Dry Contact Type a

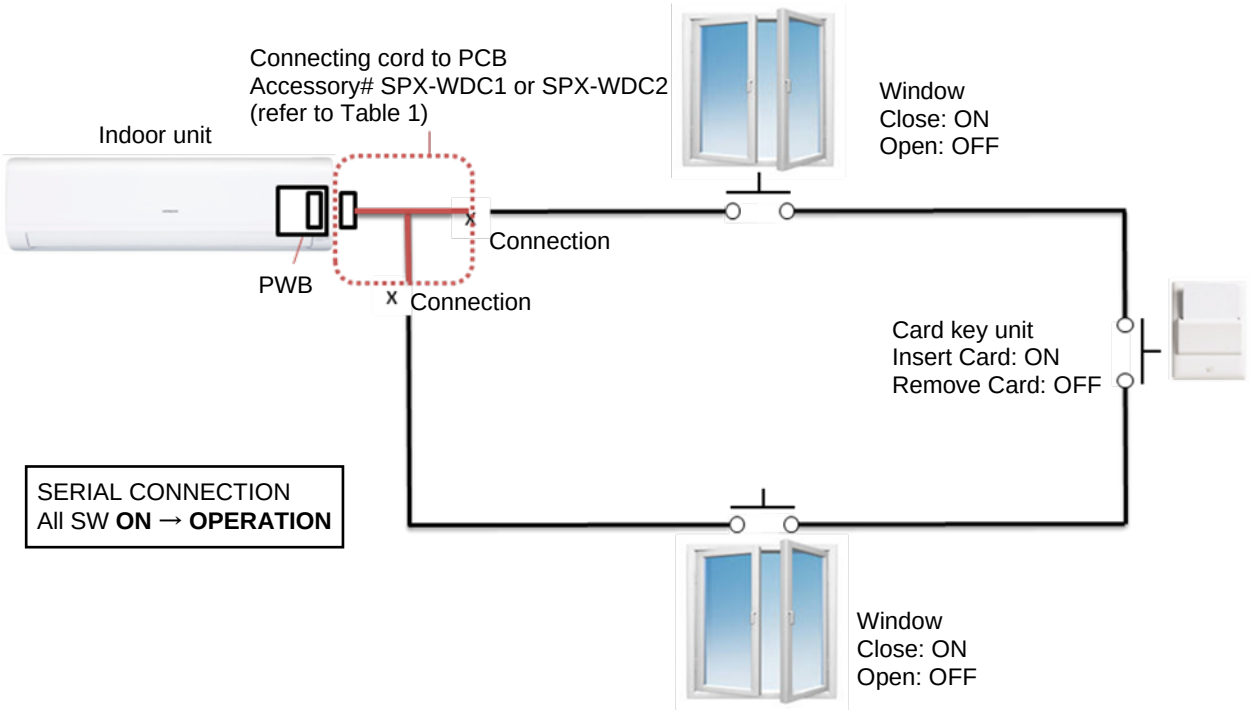

ii. Pin No. 3 of DIP SWITCH is set to ON position (LO Input Active) for Dry Contact Type b

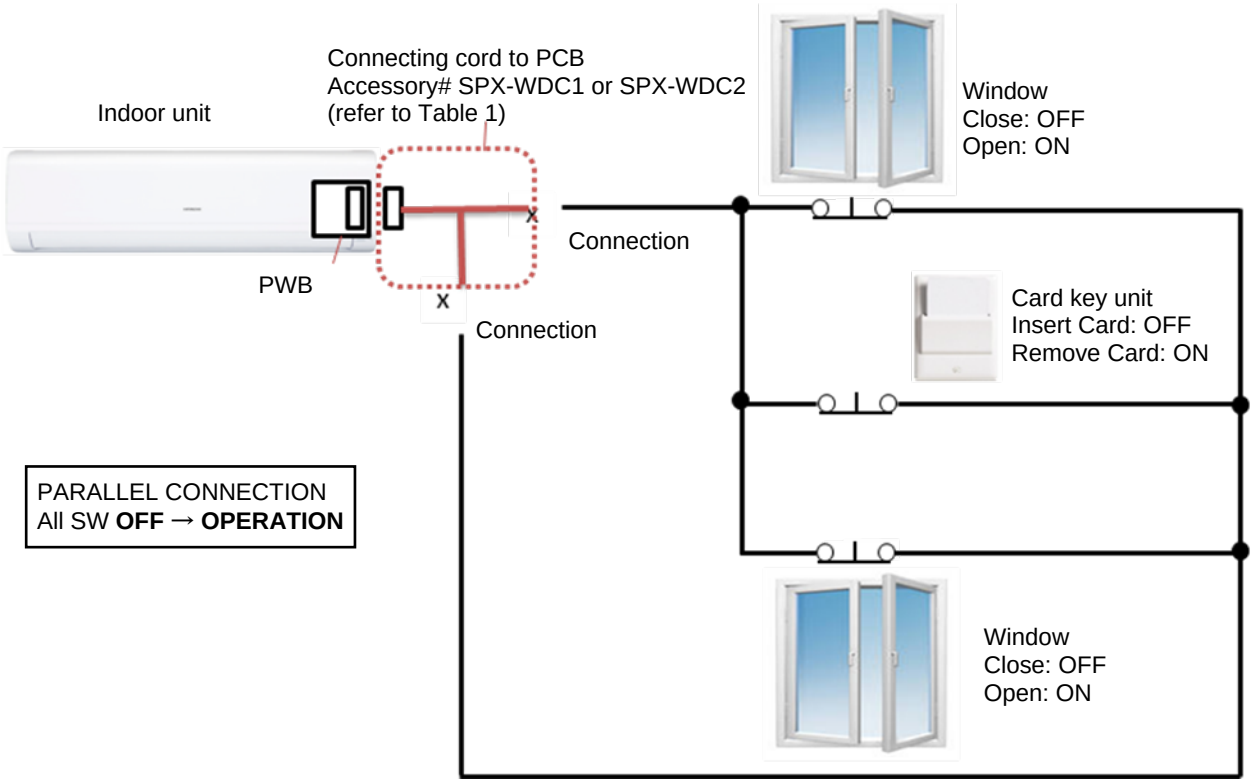

Please refer to the actual manual supplied with the optional connecting cords SPX-WDC1 and SPX-WDC2 for more details.

1.3.4 DRY CONTACT APPLICATION (USING JUMPER WIRE)

Applicable models: RAK-18/25/35PSA

The dry contact system enables the operation of the air conditioner indoor unit to be controlled by using external dry contacts (with non voltage) such as card-key controller or window for facilities such as hotels.

<table>
<tr><th colspan="2">Reference (Main PWB)</th><th>Optional Connecting cord Accessory
SPX-WDC3</th></tr>
<tr>
<td> 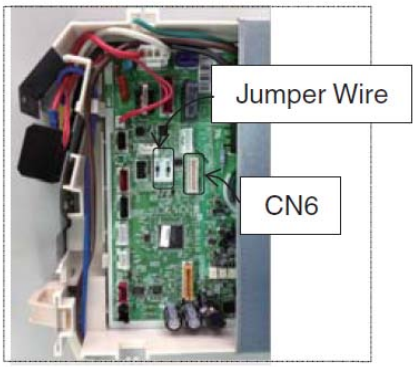
</td>
<td> 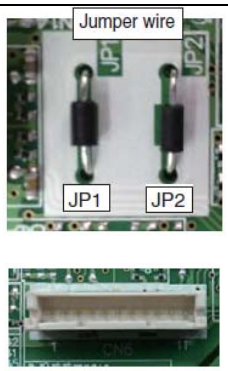

Connect the connecting cord to Main PWB CN6 (test terminal)</td>
<td> 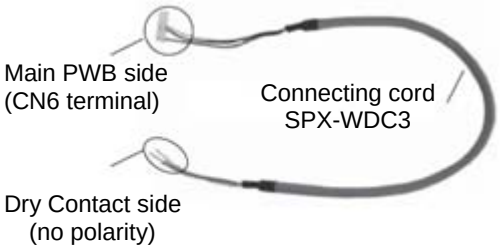
</td>
</tr>
</table>

Note:
1) Dry contact function will be selected when jumper wire JP1 is “disconnected”.
2) Select whether to disconnect or not to disconnect jumper wire JP2.
   i) Do not disconnect jumper wire JP2 if the type of Dry Contact switch to be used (for the CARD KEY UNIT or Window) is of contact type a (Normally Open Type).
   ii) Disconnect jumper wire JP2 if the type of Dry Contact switch to be used (for the CARD KEY UNIT or Window) is of contact type b (Normally Close Type).

Jumper wire.	Function	Connection setting			
JP1	Dry Contact function	Not disconnect	Disable	Disconnect	Enable
JP2	Type of Contact to be used	Not disconnect	Contact type a	Disconnect	Contact type b

Example of wiring connection to Card Key Unit will be as below (reference only)

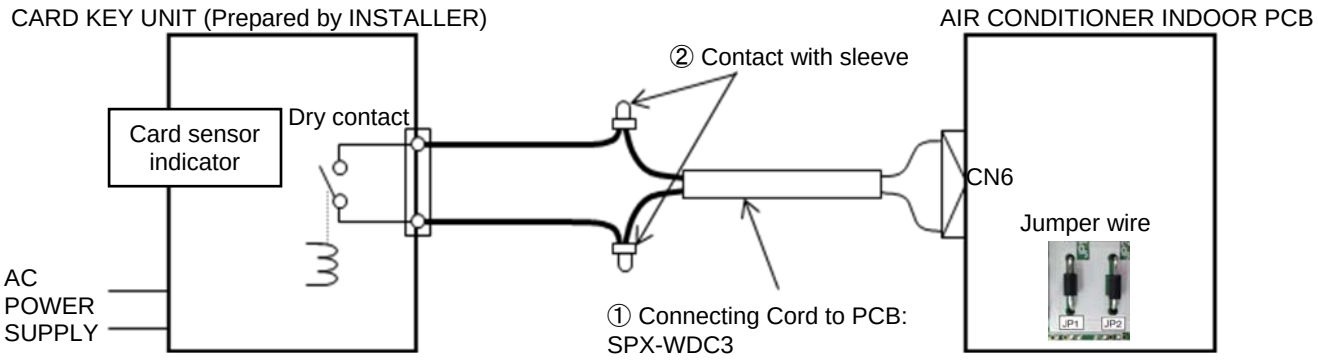

- CONNECTION EXAMPLE

i. Jumper wire JP2 is <u>not disconnected</u> for Dry Contact Type a

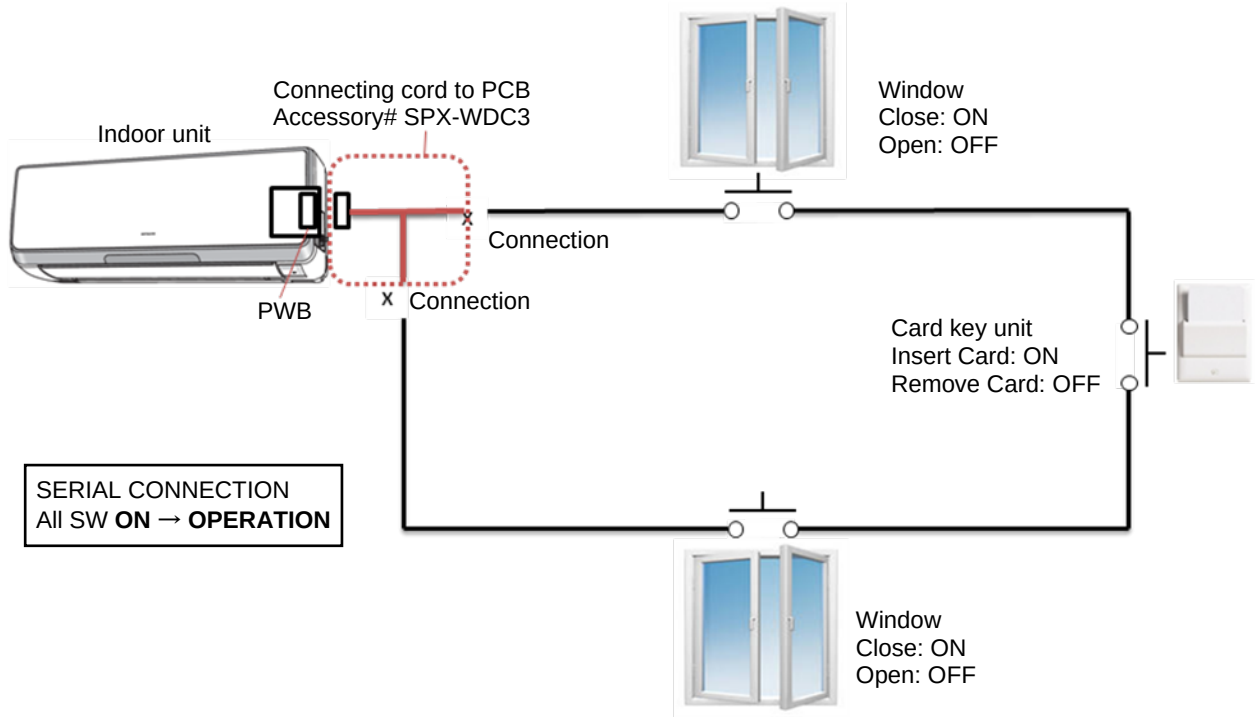

ii. Jumper Wire JP2 is <u>disconnected</u> for Dry Contact Type b

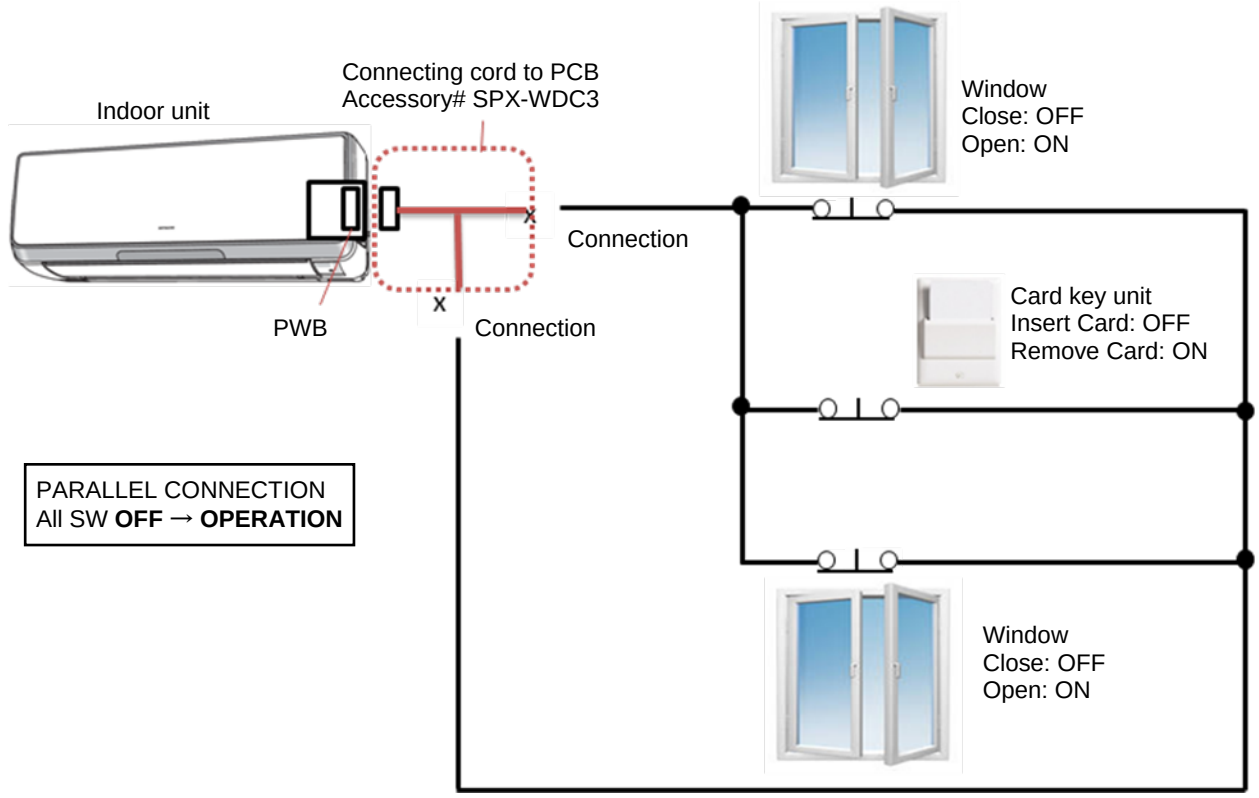

Please refer to the actual manual supplied with the optional connecting cord SPX-WDC3 for more details.

1.3.5 FUNCTION SUMMARY FOR MONO SPLIT

		SINGLE											
		Wall									Floor		Duct
	CAPACITY (COOLING)	1.8/2.5/3.5			2.5/3.5/5.0	2.0/2.5/3.5	5.0	6.0	7.0	2.5/3.5	2.5/3.5/5.0		5.0/6.0/7.0
	MODEL NAME	RAK-PSA	RAK-PSAN	RAK-PSPA	RAK-PXA	RAK-PPA	RAK-PPA	RAK-PPA	RAK-PPA	RAK-PEA	RAF-PXA	RAF-RPA	RAD-PPA
	ECO Sensor (Human Detect)	●	-	-	-	-	-	-	-	-	-	-	-
	ECO (without Sensor)	-	●	●	●	●	●	●	●	●	●	●	●
	Powerful	●	●	●	●	●	●	●	●	●	●	●	●
	Silent	-	-	●	●	●	●	●	●	-	●	●	●
	Leave Home (days)	●	●	● (1-99)	● (1-99)	● (1-99)	● (1-99)	● (1-99)	● (1-99)	●	● (1-99)	● (1-99)	● (1-99)
Timer	Weekly	-	-	●	●	●	●	●	●	-	●	●	●
	24 Hour	●	●	●	●	●	●	●	●	-	●	●	●
	12 Hour	-	-	-	-	-	-	-	-	●	-	-	-
	ECO Sleep 1-2-3-7 (h)	-	-	●	●	●	●	●	●	-	●	●	●
	Sleep (0.5-1-2-3-4-5-6-7-8-9 (h)	●	●	-	-	-	-	-	-	-	-	-	-
Air Purify	Auto Filter Cleaning	●	●	-	-	-	-	-	-	-	-	-	-
	Ionized Mist	●	-	-	-	-	-	-	-	-	-	-	-
	Stainless Plasma Air Purification	●	-	-	●	-	-	-	-	-	-	-	-
Auto Swing	Up-Down	●	●	●	●	●	●	●	●	●	●	●	-
	Right-Left	●	●	-	-	-	●	-	●	-	-	-	-
Room Temperature Display	Remocon	-	-	●	●	●	●	●	●	-	●	●	●
	IU	-	●	-	-	-	-	-	-	-	-	-	-
Operation Lock	Remocon	●	●	●	●	●	●	●	●	-	●	●	●
	IU	-	-	● DSW	● DSW	● DSW	● DSW	● DSW	● DSW	● DSW	● DSW	● DSW	● DSW
	Stainless Clean	●	●	-	-	-	-	-	-	-	-	-	-
	Power Consumption Display	-	-	●	●	●	●	●	●	-	●	●	●
	One Touch Clean	●	●	●	●	●	●	●	●	-	●	●	●
	Extended Air Flow	-	-	-	-	-	-	-	-	-	●	-	-
	Dry Contact	● Jumper Wire	-	● DSW	● DSW	● DSW	● DSW	● DSW	● DSW	● DSW	● DSW	● DSW	● DSW
	Auto Restart	●	●	●	●	●	●	●	●	●	●	●	●
	Auto Changeover	●	●	●	●	●	●	●	●	-	●	●	-
	ID Switch	● Switch (Remocon)	● Switch (Remocon)	● Software (Remocon)	● Software (Remocon)	● DSW (IU) Software (Remocon	● Software (Remocon)	● Software (Remocon)	● Software (Remocon)	● DSW (IU) Jumper Wire (Remocon)	● Software (Remocon)	● **Note 2 *DSW (IU)** Software (Remocon)	● Software (Remocon)
	Self-Diagnosis digital display on remote controller	-	-	●	●	●	●	●	●	-	●	●	●

Note:
1: Features mentioned for Duct models above are available only when it is connected to the SPX-RCKA wireless remote controller
2: For RAF-50RPA, **both** DSW on the indoor and remocon itself need to be set accordingly when using ID Switch function.

1.3.6 FUNCTION SUMMARY FOR MONOZONE/MULTIZONE

		MONO/MULTI					
		Wall		Floor		Cassette	Duct
	CAPACITY (COOLING)	1.8/2.5/3.5/5.0		2.5/3.5/5.0		2.5/3.5/ 5.0	1.8/2.5/ 3.5/5.0
	MODEL NAME	RAK-QXA	RAK-QPA	RAF-QXA	RAF-RPA	RAI-RPA	RAD-RPA
	ECO Sensor (Human Detect)	-	-	-	-	-	-
	ECO (without Sensor)	●	●	●	●	●	●
	Powerful	●	●	●	●	●	●
	Silent	●	●	●	●	●	●
	Leave Home (days)	● (1-99)	● (1-99)	● (1-99)	● (1-99)	● (1-99)	● (1-99)
Timer	Weekly	●	●	●	●	●	●
	24 Hour	●	●	●	●	●	●
	12 Hour	-	-	-	-	-	-
	ECO Sleep 1-2-3-7 (h)	●	●	●	●	●	●
	Sleep (0.5-1-2-3-4-5-6-7-8-9 (h)	-	-	-	-	-	-
Air Purify	Auto Filter Cleaning	-	-	-	-	-	-
	Ionized Mist	-	-	-	-	-	-
	Stainless Plasma Air Purification	-	-	-	-	-	-
Auto Swing	Up-Down	●	●	●	●	●	-
	Right-Left	-	●	-	-	-	-
Room Temperature Display	Remocon	●	●	●	●	●	●
	IU	-	-	-	-	-	-
Operation Lock	Remocon	●	●	●	●	●	●
	IU	● DSW	● DSW	● DSW	● DSW	● DSW	● DSW
	Stainless Clean	-	-	-	-	-	-
	Power Consumption Display	●	●	●	●	●	●
	One Touch Clean	●	●	●	●	●	●
	Extended Air Flow	-	-	●	-	-	-
	Dry Contact	● DSW	● DSW	● DSW	● DSW	● DSW	● DSW
	Auto Restart	●	●	●	●	●	●
	Auto Changeover	●	●	●	●	●	-
	ID Switch	● Software (Remocon)	● Software (Remocon)	● Software (Remocon)	● Software (Remocon)	● Software (Remocon)	● Software (Remocon)
	Self-Diagnosis digital display on remote controller	●	●	●	●	●	●

Note:

- Features mentioned for Duct models above are available only when it is connected to the SPX-RCKA wireless remote controller
- Autochangeover is only available for single indoor unit connection.

2 GENERAL DATA

CONTENTS

2 GENERAL DATA ____ 2-1

2.1. MONOZONE / MULTIZONE ____ 2-2

2.1.1. WALL TYPE (RAK-18QXA/25QXA/35QXA/50QXA) ____ 2-2
2.1.2. WALL TYPE (RAK-18QPA/25QPA/35QPA/50QPA) ____ 2-3
2.1.3. CEILING CASSETE (RAI-25RPA/35RPA/50RPA) ____ 2-4
2.1.4. DUCT TYPE (RAD-18RPA/25RPA/35RPA/50RPA) ____ 2-5
2.1.5. FLOOR TYPE (RAF-25QXA/35QXA/50QXA) ____ 2-6
2.1.6. FLOOR TYPE (RAF-25RPA/35RPA/50RPA) ____ 2-7
2.1.7. MONOZONE OUTDOOR (RAC-25NPA/35NPA/50NPA) ____ 2-8
2.1.8. MULTIZONE OUTDOOR (RAM-36NP2A/53NP2A/53NP3A/68NP3A/70NP4A/90NP5A/130NP6A) ____ 2-9

2.2. MONO SPLIT ____ 2-11

2.2.1. WALL TYPE (RAK-18PSA/25PSA/35PSA) ____ 2-11
2.2.2. WALL TYPE (RAC-18WSA/25WSA/35WSA) ____ 2-12
2.2.3. WALL TYPE (RAK-18PSAN/25PSAN/35PSAN) ____ 2-13
2.2.4. WALL TYPE (RAC-18WSAN/25WSAN/35WSAN) ____ 2-14
2.2.5. WALL TYPE (RAK-18PSPA/25PSPA/35PSPA) ____ 2-15
2.2.6. WALL TYPE (RAC-18WSPA/25WSPA/35WSPA) ____ 2-16
2.2.7. WALL TYPE (RAK-25PXA/35PXA/50PXA) ____ 2-17
2.2.8. WALL TYPE (RAC-25WXA/35WXA/50WXA) ____ 2-18
2.2.9. WALL TYPE (RAK-18PPA/25PPA/35PPA) ____ 2-19
2.2.10. WALL TYPE (RAC-18WPA/25WPA/35WPA) ____ 2-20
2.2.11. WALL TYPE (RAK-50PPA/60PPA/70PPA) ____ 2-21
2.2.12. WALL TYPE (RAC-50WPA/60WPA/70WPA) ____ 2-22
2.2.13. WALL TYPE (RAK-18PEA/25PEA/35PEA/50PEA) ____ 2-23
2.2.14. WALL TYPE (RAC-18WEA/25WEA/35WEA/50WEA) ____ 2-24
2.2.15. FLOOR TYPE (RAF-25PXA/35PXA/50PXA) ____ 2-25
2.2.16. FLOOR TYPE (RAC-25FXA/35FXA/50FXA) ____ 2-26
2.2.17. FLOOR TYPE (RAF-25RPA/35RPA/50RPA) ____ 2-27
2.2.18. FLOOR TYPE (RAC-25FPA/35FPA/50FPA) ____ 2-28
2.2.19. DUCT TYPE (RAD-50PPA/60PPA/70PPA) ____ 2-29
2.2.20. DUCT TYPE (RAC-50DPA/60DPA/70DPA) ____ 2-30

2.1. MONOZONE / MULTIZONE

2.1.1. WALL TYPE (RAK-18QXA/25QXA/35QXA/50QXA)

INDOOR	Unit	RAK-18QXA	RAK-25QXA	RAK-35QXA	RAK-50QXA
Nominal capacity adjustable		1,20 ← 1,80	-	-	-
Nominal Cooling capacity (min - max)	kW	1.8 (1.0-2.5)	2.5 (1.0-3.1)	3.5 (1.0-4.0)	5.0 (0.9-5.2)
Cooling sensible capacity	kW	0.0	0.0	0.0	0.0
Nominal Heating capacity (min - max)	kW	2.5 (1.0-3.1)	3.4 (1.1-4.4)	4.2 (1.1-5.0)	6.5 (0.9-8.1)
Noise level cooling (sound pressure) (SL / L / M / H)	dB(A)	20/23/26/32	20/26/32/37	22/29/35/39	25/31/39/47
Noise level heating (sound pressure) (SL / L / M / H)	dB(A)	20/24/27/33	20/27/33/39	22/30/35/41	25/31/39/48
Noise level (sound power)	dB(A)	54	57	59	59
Air flow cooling mode (SL / L / M / H)	m^3/h	180/228/252/396	240/360/420/510	276/336/420/522	288/408/552/690
Air flow heating mode (SL / L / M / H)	m^3/h	180/228/252/450	198/318/420/570	264/396/510/618	288/432/570/780
Fan Motor	W	25	25	25	25
Drain pump pressure lift	cm	-	-	-	-
Static pressure (SL / L / M / H)	Pa	-	-	-	-
Dehumidification	l/h	1.2	1.4	1.6	2.8
Included drain pump		-	-	-	-
Max. height available for drain pump (RAD/RAI only)		-	-	-	-
Dimensions (H x W x D)	mm	295x795x198	295x795x198	295x795x198	295x795x198
Panel dimensions (H x W x D)	mm	-	-	-	-
Weight	kg	9.5	9.5	9.5	9.5
Colour (Munsell Code)		White(*ZYYD6)			
Condensate Drain	mm	φ16	φ16	φ16	φ16
Panel weight	kg	-	-	-	-
Panel reference		-	-	-	-
Color of the panel (RAL)		-	-	-	-
Running current	A	REFER TO OUTDOOR			
Power supply		35 V DC from outdoor unit	35 V DC from outdoor unit	35 V DC from outdoor unit	35 V DC from outdoor unit
Cable section	mm^2	N/A	N/A	N/A	N/A
Piping diameter (Liq / Gas)		1/4" / 3/8"	1/4" / 3/8"	1/4" / 3/8"	1/4" / 1/2"
Drain diameter (ext)	mm	φ16	φ16	φ16	φ16
Remote control (standard/optional) *		RAR-5E2/ SPX-RCDB	RAR-5E2/ SPX-RCDB	RAR-5E2/ SPX-RCDB	RAR-5E2/ SPX-RCDB
Filter					
ACL Filter		Wasabi	Wasabi	Wasabi	Wasabi
Dimensions (H x W x D)	mm	48x243x5	48x243x5	48x243x5	48x243x5
Pre-filter (Standard / Optional)		Nano Stainless/-	Nano Stainless/-	Nano Stainless/-	Nano Stainless/-

*more information regarding remote control can be found in Chapter 9.

NOTE:

1. *The nominal cooling and heating capacity is the combined capacity of the HITACHI standard split system, and are based on the ISO 5151.*

Operation Conditions		*Cooling*	*Heating*
Indoor Air Inlet Temperature	***dB***	*27.0 °C*	*20.0 °C*
	WB	*19.0 °C*	
Outdoor Air Inlet Temperature	***dB***	*35.0 °C*	*7.0 °C*
	WB		*6.0 °C*
***Piping Length**: 5.0 meters; **Piping Lift**: 0 meter* ***dB**: Dry Bulb; **WB**: Wet Bulb*			

2. *The Sound Pressure Level is based on the following conditions:*

- *0.8 meter beneath indoor height center*
- *1 meter from Discharge grille*

The above data was measured in an anechoic chamber. Please take into consideration reflected sound of your specific site

2.1.2. WALL TYPE (RAK-18QPA/25QPA/35QPA/50QPA)

INDOOR	Unit	RAK-18QPA	RAK-25QPA	RAK-35QPA	RAK-50QPA
Nominal capacity adjustable		1,20 ← 1,80	-	-	-
Nominal Cooling capacity (min - max)	kW	1.8 (1.0-2.5)	2.5 (1.0-3.1)	3.5 (1.0-4.0)	5.0 (0.9-5.2)
Cooling sensible capacity	kW	-	-	-	-
Nominal Heating capacity (min - max)	kW	2.5 (1.10-3.20)	3.4 (1.1-4.4)	4.2 (1.1-5.0)	6.5 (0.9-8.1)
Noise level cooling (sound pressure) (SL / L / M / H)	dB(A)	20/26/30/35	20/26/32/38	25/29/35/41	27/31/39/47
Noise level heating (sound pressure) (SL / L / M / H)	dB(A)	23/27/33/36	23/27/33/39	26/30/35/41	27/31/39/47
Noise level (sound power)	dB(A)	56	57	57	60
Air flow cooling mode (SL / L / M / H)	m^3/h	240/300/402/480	288/360/420/510	240/360/480/606	300/408/540/780
Air flow heating mode (SL / L / M / H)	m^3/h	240/348/450/540	288/420/480/570	240/420/510/690	330/408/570/810
Fan Motor	W	35	35	35	35
Drain pump pressure lift	cm	-	-	-	-
Static pressure (SL / L / M / H) (nominal conditions SP 00)	Pa	-	-	-	-
Dehumidification	l/h	1.2	1.4	1.6	2.8
Included drain pump		no	no	no	No
Max. height available for drain pump (RAD/RAI only)		no	no	no	No
Dimensions (H x W x D)	mm	300x790x230	300x790x230	300x790x230	300x790x230
Panel dimensions (H x W x D)	mm	-	-	-	-
Weight	kg	10.0	10.0	10.0	10.0
Colour (Munsell Code)		Clear White (*ZLL159M)			
Condensate Drain	mm	φ16	φ16	φ16	φ16
Panel weight	kg	-	-	-	-
Panel reference		-	-	-	-
Color of the panel (RAL)		-	-	-	-
Running current	A	2.57-2.36 / 3.17-2.90	3.44-3.16 / 3.17-3.66	5.00-4.59 / 4.96-4.55	8.14-7.50 / 9.00-8.30
Power supply		35 V DC from outdoor unit	35 V DC from outdoor unit	35 V DC from outdoor unit	35 V DC from outdoor unit
Cable section	mm^2	N/A	N/A	N/A	N/A
Piping diameter (Liq / Gas)		1/4" / 3/8"	1/4" / 3/8"	1/4" / 3/8"	1/4" / 1/2"
Drain diameter (ext)	mm	φ16	φ16	φ16	φ16
Remote control (standard/optional) *		RAR-5E1/ SPX-RCDB	RAR-5E1/ SPX-RCDB	RAR-5E1/ SPX-RCDB	RAR-5E1/ SPX-RCDB
Filter					
ACL Filter		Wasabi	Wasabi	Wasabi	Wasabi
Dimensions (H x W x D)	mm	48x243x5	48x243x5	48x243x5	48x243x5
Pre-filter (Standard / Optional)		Washable / Stainless	Washable / Stainless	Washable / Stainless	Washable / Stainless

*more information regarding remote control can be found in Chapter 9

NOTE:

1. *The nominal cooling and heating capacity is the combined capacity of the HITACHI standard split system, and are based on the ISO 5151.*

Operation Conditions		*Cooling*	*Heating*
Indoor Air Inlet Temperature	***dB***	*27.0 °C*	*20.0 °C*
	WB	*19.0 °C*	
Outdoor Air Inlet Temperature	***dB***	*35.0 °C*	*7.0 °C*
	WB		*6.0 °C*
***Piping Length**: 5.0 meters; **Piping Lift**: 0 meter* ***dB**: Dry Bulb; **WB**: Wet Bulb*			

2. *The Sound Pressure Level is based on the following conditions:*

- *0.8 meter beneath indoor height center*
- *1 meter from Discharge grille*

The above data was measured in an anechoic chamber so that reflected sound should be taken into consideration when installing the unit.

2.1.3. CEILING CASSETE (RAI-25RPA/35RPA/50RPA)

INDOOR	Unit	RAI-25RPA	RAI-35RPA	RAI-50RPA	RAI-ECPP
Nominal capacity adjustable		-	-	-	
Nominal Cooling capacity (min - max)	kW	2.5 (0.9-3.0)	3.5 (0.9-4.0)	5.0 (0.9-5.2)	
Cooling sensible capacity	kW	2.0	2.9	3.8	
Nominal Heating capacity (min - max)	kW	3.5 (0.9-5.0)	4.8 (0.9-6.6)	6.2 (0.9-7.6)	
Noise level cooling (sound pressure) (SL / L / M / H)	dB(A)	25/29/32/35	26/29/34/39	29/32/35/43	
Noise level heating (sound pressure) (SL / L / M / H)	dB(A)	27/30/33/36	29/32/36/40	30/32/36/43	
Noise level (sound power)	dB(A)	50	58	58	
Air flow cooling mode (SL / L / M / H)	m^3/h	330/360/420/480	390/420/510/570	390/450/510/630	
Air flow heating mode (SL / L / M / H)	m^3/h	390/420/480/540	450/480/510/660	450/510/540/690	
Fan Motor	W	25	25	25	
Drain pump pressure lift	cm	11.5	11.5	11.5	
Static pressure (SL / L / M / H) (nominal conditions SP 00)	Pa	-	-	-	
Dehumidification	l/h	1.4	1.8	2.0	
Included drain pump		yes	yes	yes	
Max. height available for drain pump (RAD/RAI only)		115	115	115	
Dimensions (H x W x D)	mm	285x580x580	285x580x580	285x580x580	32x650x650
Panel dimensions (H x W x D)	mm	32x650x650	32x650x650	32x650x650	
Weight	kg	20.0	20.0	20.0	
Colour (Munsell Code)		Optional panel (RAI-ECPP)			Pure White (N9.25)
Condensate Drain	mm	φ16	φ16	φ16	
Panel weight	kg	4.0	4.0	4.0	
Panel reference		RAI-ECPP	RAI-ECPP	RAI-ECPP	
Color of the panel (RAL)		RAL 9010	RAL 9010	RAL 9010	
Running current	A	3.2~2.93 / 4.3~3.96	5.05~4.63 / 6.24~5.72	9.1~8.37 / 9.87~9.05	
Power supply		35 V DC from outdoor unit	35 V DC from outdoor unit	35 V DC from outdoor unit	
Cable section	mm^2	N/A	N/A	N/A	
Piping diameter (Liq / Gas)		1/4" / 3/8"	1/4" / 3/8"	1/4" / 1/2"	
Drain diameter (ext)	mm	φ16	φ16	φ16	
Remote control (standard/optional) *		RAR-5E2/ SPX-RCDB	RAR-5E2/ SPX-RCDB	RAR-5E2/ SPX-RCDB	
Filter					
ACL Filter		Wasabi (Optional)	Wasabi (Optional)	Wasabi (Optional)	
Dimensions (H x W x D)	mm	35x270x5	35x270x5	35x270x5	
Pre-filter (Standard / Optional)		Washable/-	Washable/-	Washable/-	

*more information regarding remote control can be found in Chapter 9

NOTE:

1. *The nominal cooling and heating capacity is the combined capacity of the HITACHI standard split system, and are based on the ISO 5151.*

Operation Conditions		*Cooling*	*Heating*
Indoor Air Inlet Temperature	***dB***	*27.0 °C*	*20.0 °C*
	WB	*19.0 °C*	
Outdoor Air Inlet Temperature	***dB***	*35.0 °C*	*7.0 °C*
	WB		*6.0 °C*
***Piping Length**: 5.0 meters; **Piping Lift**: 0 meter* ***dB**: Dry Bulb; **WB**: Wet Bulb*			

2. *The Sound Pressure Level is based on the following conditions:*

- *0.8 meter beneath indoor height center*
- *1.5 meter from Discharge grille*

The above data was measured in an anechoic chamber so that reflected sound should be taken into consideration when installing the unit.

2.1.4. DUCT TYPE (RAD-18RPA/25RPA/35RPA/50RPA)

INDOOR	Unit	RAD-18RPA	RAD-25RPA	RAD-35RPA	RAD-50RPA
Nominal capacity adjustable		-	-	-	-
Nominal Cooling capacity (min - max)	kW	1.8 (0.9~2.5)	2.5 (0.9-3.0)	3.5 (0.9-4.0)	5.0 (0.9-5.6)
Cooling sensible capacity	kW	-	2.0	2.5	3.8
Nominal Heating capacity (min - max)	kW	2.5 (0.9~3.2)	3.5 (0.9-5.5)	4.8 (0.9-6.6)	6.0 (0.9-7.5)
Noise level cooling (sound pressure) (SL / L / M / H)	dB(A)	29/31/34/36	29/31/34/36	29/31/34/36	29/32/35/38
Noise level heating (sound pressure) (SL / L / M / H)	dB(A)	27/30/33/37	27/30/33/37	27/30/33/37	29/32/35/38
Noise level (sound power)	dB(A)	N/A	57	57	58
Air flow cooling mode (SL / L / M / H)	m3/h	330/372/438/492	330/390/450/510	330/390/450/510	330/360/450/510
Air flow heating mode (SL / L / M / H)	m3/h	330/372/450/552	360/420/480/600	360/420/480/600	360/420/480/630
Fan Motor	W	20	20	20	20
Drain pump pressure lift	cm	30 max	30 max	30 max	30 max
Static pressure (SL / L / M / H) (nominal conditions SP 00)	Pa	-	-	-	-
Dehumidification	l/h	1.4	1.4	1.6	2.8
Included drain pump		yes	yes	yes	yes
Max. height available for drain pump (RAD/RAI only)		300	300	300	300
Dimensions (H x W x D)	mm	235x750x400	235x750x400	235x750x400	235x750x400
Panel dimensions (H x W x D)	mm	-	-	-	-
Weight	kg	16.0	16.0	16.0	16.0
Colour (Munsell Code)		-	-	-	-
Condensate Drain	mm	φ16	φ16	φ16	φ16
Panel weight	kg	-	-	-	-
Panel reference		-	-	-	-
Color of the panel (RAL)		-	-	-	-
Running current	A	2.56~2.35 / 3.2~2.92	3.19~2.93 / 4.45~4.08	5.69~5.22 / 7.81~7.15	9.10~8.37 / 9.87~9.05
Power supply		35V DC from outdoor	35 V DC from outdoor unit	35 V DC from outdoor unit	35 V DC from outdoor unit
Cable section	mm²	N/A	N/A	N/A	N/A
Piping diameter (Liq / Gas)		1/4" / 3/8"	1/4" / 3/8"	1/4" / 3/8"	1/4" / 1/2"
Drain diameter (ext)	mm	φ16	φ16	φ16	φ16
Remote control (optional only) *		SPX-RCKA / SPX-RCDA	SPX-RCKA / SPX-RCDA	SPX-RCKA / SPX-RCDA	SPX-RCKA / SPX-RCDA
Filter					
ACL Filter		-	-	-	-
Dimensions (H x W x D)	mm	-	-	-	-
Pre-filter (Standard / Optional)		Washable/-	Washable/-	Washable/-	Washable/-

*more information regarding remote control can be found in Chapter 9

NOTE:

1. *The nominal cooling and heating capacity is the combined capacity of the HITACHI standard split system, and are based on the ISO 5151.*

Operation Conditions		*Cooling*	*Heating*
Indoor Air Inlet Temperature	***dB***	*27.0 °C*	*20.0 °C*
	WB	*19.0 °C*	
Outdoor Air Inlet Temperature	***dB***	*35.0 °C*	*7.0 °C*
	WB		*6.0 °C*
***Piping Length**: 5.0 meters; **Piping Lift**: 0 meter* ***dB**: Dry Bulb; **WB**: Wet Bulb*			

2. *The Sound Pressure Level is based on the following conditions:*

- *0.8 meter beneath indoor height center*
- *1.5 meter from Discharge grille*

The above data was measured in an anechoic chamber. Please take into consideration reflected sound of your specific site

2.1.5. FLOOR TYPE (RAF-25QXA/35QXA/50QXA)

INDOOR	Unit	RAF-25QXA	RAF-35QXA	RAF-50QXA
Nominal capacity adjustable		-	-	-
Nominal Cooling capacity (min – max)	kW	2.5 (1.0-3.1)	3.5 (1.0-4.0)	5.0 (0.9-5.2)
Cooling sensible capacity	kW	2	2.9	3.8
Nominal Heating capacity (min – max)	kW	3.4 (1.1-4.4)	4.2 (1.1-5.0)	6.5 (0.9-8.1)
Noise level cooling (sound pressure) (SL / L / M / H)	dB(A)	20/26/31/38	20/26/31/40	22/29/36/44
Noise level heating (sound pressure) (SL / L / M / H)	dB(A)	20/26/32/38	20/26/32/39	22/30/36/45
Noise level (sound power)	dB(A)	N/A	N/A	N/A
Air flow cooling mode (SL / L / M / H)	m^3/h	270/420/480/570	270/390/510/684	300/450/540/750
Air flow heating mode (SL / L / M / H)	m^3/h	300/408/540/630	300/420/540/690	390/480/600/780
Fan Motor	W	25	25	25
Drain pump pressure lift	cm	-	-	-
Static pressure (SL / L / M / H) (nominal conditions SP 00)	Pa	-	-	-
Dehumidification	l/h	1.4	1.8	2
Included drain pump		no	no	no
Max. Height available for drain pump (RAD/RAI only)		no	no	no
Dimensions (H x W x D)	mm	590x750x215	590x750x215	590x750x215
Panel dimensions (H x W x D)	mm	-	-	-
Weight	kg	15	15	15
Colour (Munsell Code)		Pure White(N9.25)		
Condensate Drain	mm	φ16	φ16	φ16
Panel weight	kg	-	-	-
Panel reference		-	-	-
Color of the panel (RAL)		-	-	-
Running current	A	REFER TO OUTDOOR		
Power supply		35 V DC from outdoor unit	35 V DC from outdoor unit	35 V DC from outdoor unit
Cable section	mm^2	N/A	N/A	N/A
Piping diameter (Liq / Gas)		1/4" / 3/8"	1/4" / 3/8"	1/4" / 1/2"
Drain diameter (ext)	mm	φ16	φ16	φ16
Remote control (standard/optional) *		RAR-5E4/ SPX-RCDB	RAR-5E4/ SPX-RCDB	RAR-5E4/ SPX-RCDB
Filter				
ACL Filter		Nano Titanium	Nano Titanium	Nano Titanium
Dimensions (H x W x D)	mm	243x48x8	243x48x8	243x48x8
Pre-filter (Standard / Optional)		Nano Stainless/-	Nano Stainless/-	Nano Stainless/-

*more information regarding remote control can be found in Chapter 9

NOTE:

1. *The nominal cooling and heating capacity is the combined capacity of the HITACHI standard split system, and are based on the ISO 5151.*

Operation Conditions		*Cooling*	*Heating*
Indoor Air Inlet Temperature	***dB***	*27.0 °C*	*20.0 °C*
	WB	*19.0 °C*	
Outdoor Air Inlet Temperature	***dB***	*35.0 °C*	*7.0 °C*
	WB		*6.0 °C*
***Piping Length**: 5.0 meters; **Piping Lift**: 0 meter* ***dB**: Dry Bulb; **WB**: Wet Bulb*			

2. *The Sound Pressure Level is based on the following conditions:*

- *Half height of the unit*
- *1 meter from Discharge grille*

The above data was measured in an anechoic chamber. Please take into consideration reflected sound of your specific site

2.1.6. FLOOR TYPE (RAF-25RPA/35RPA/50RPA)

INDOOR	Unit	RAF-25RPA	RAF-35RPA	RAF-50RPA
Nominal capacity adjustable		no	no	no
Nominal Cooling capacity (min - max)	kW	2.50 (0.90 - 3.10)	3.50 (1.10 - 4.20)	5.00 (1.90 - 5.20)
Cooling sensible capacity	kW	2.3	2.9	3.8
Nominal Heating capacity (min - max)	kW	3.40 (0.90 - 4.40)	4.20 (1.10 - 5.20)	6.00 (2.20 - 7.30)
Noise level cooling (sound pressure) (SL / L / M / H)	dB(A)	23/26/32/40	25/29/35/42	25/30/37/46
Noise level heating (sound pressure) (SL / L / M / H)	dB(A)	23/27/33/40	26/30/35/42	25/30/37/47
Noise level (sound power)	dB(A)	54	56	60
Air flow cooling mode (SL / L / M / H)	m^3/h	378/462/540	400/485/600	430/530/650
Air flow heating mode (SL / L / M / H)	m^3/h	408/498/600	440/525/600	470/570/720
Fan Motor	W	25	25	25
Drain pump pressure lift	cm	-	-	-
Static pressure (SL / L / M / H) (nominal conditions SP 00)	Pa	-	-	-
Dehumidification	l/h	1.4	1.6	2
Included drain pump		-	-	-
Max. height available for drain pump (RAD/RAI only)		-	-	-
Dimensions (H x W x D)	mm	600x760x235	600x760x235	600x760x235
Panel dimensions (H x W x D)	mm	-	-	-
Weight	kg	14	14	14
Colour (Munsell Code)		PURE WHITE (N9.25)		
Condensate Drain	mm	φ16	φ16	φ16
Panel weight	kg	-	-	-
Panel reference		-	-	-
Color of the panel (RAL)		-	-	-
Running current	A	3.43/4.11	4.30/4.81	6.63/7.29
Power supply		35 V DC from outdoor unit	35 V DC from outdoor unit	35 V DC from outdoor unit
Cable section	mm^2	0.75x2	0.75x2	0.75x2
Piping diameter (Liq / Gas)		1/4" - 3/8"	1/4" - 3/8"	1/4" - 1/2"
Drain diameter (ext)	mm	φ16	φ16	φ16
Remote control (standard/optional) *		RAR-5E2/SPX-RCDB	RAR-5E2/SPX-RCDB	RAR-5E2/SPX-RCDB
Filter				
ACL Filter		Nano Titanium	Nano Titanium	Nano Titanium
Dimensions (H x W x D)	mm	48x243x8	48x243x8	48x243x8
Pre-filter (Standard / Optional)		Stainless/-	Stainless/-	Stainless/-

*more information regarding remote control can be found in Chapter 9

NOTE:

1. *The nominal cooling and heating capacity is the combined capacity of the HITACHI standard split system, and are based on the ISO 5151.*

Operation Conditions		*Cooling*	*Heating*
Indoor Air Inlet Temperature	***dB***	*27.0 °C*	*20.0 °C*
	WB	*19.0 °C*	
Outdoor Air Inlet Temperature	***dB***	*35.0 °C*	*7.0 °C*
	WB		*6.0 °C*
***Piping Length**: 5.0 meters; **Piping Lift**: 0 meter* ***dB**: Dry Bulb; **WB**: Wet Bulb*			

2. *The Sound Pressure Level is based on the following conditions:*
   - *Half height of the unit*
   - *1 meter from Discharge grille*

   The above data was measured in an anechoic chamber. Please take into consideration reflected sound of your specific site

2.1.7. MONOZONE OUTDOOR (RAC-25NPA/35NPA/50NPA)

OUTDOOR		UNIT	RAC-25NPA	RAC-35NPA	RAC-50NPA
Minimum / Maximum indoor units connectable			-	-	-
Minimum / Maximum connected capacity			2.5kW	3.5kW	5.0kW
Nominal Cooling capacity (min - max)		kW	REFER TO INDOOR	REFER TO INDOOR	REFER TO INDOOR
Nominal Heating capacity (min - max)		kW	REFER TO INDOOR	REFER TO INDOOR	REFER TO INDOOR
Nominal cooling power input (min - max)		kW	RAI -0.695 (0.155-1.050) RAD - 0.695 (0.155-1.050)	RAI - 1.100 (0.155-1.280) RAD - 1.240 (0.155-1.280)	RAI - 1.990 (0.155-2.200) RAD - 2.000 (0.155-2.060)
Nominal heating power input (min - max)		kW	RAI -0. 940 (0.155-1.400) RAD - 0.970 (0.115-1.400)	RAI - 1.360 (0.115-1.920) RAD - 1.700 (0.115-1.920)	RAI - 2.160 (0.155-2.700) RAD - 2.300 (0.115-2.530)
EER / COP			RAI - 3.60 / 3.72 RAD -3.60 / 3.61	RAI - 3.18 / 3.53 RAD -2.82 / 2.82	RAI - 2.51 / 2.87 RAD -2.50 / 2.61
SEER / SCOP			RAI – 5.7 / 3.8 RAD - 5.1 / 3.8	RAI – 5.8 / 3.8 RAD - 5.1 / 3.8	RAI – 5.2 / 3.8 RAD - 4.7 / 3.8
Energy class (SEER/SCOP)			RAI – A+ / A RAD - A / A	RAI – A+ / A RAD - A / A	RAI - A / A RAD - B / A
Noise level cooling (sound pressure)		dB(A)	46	47	50
Noise level heating (sound pressure)		dB(A)	46	49	52
Noise level (sound power)		dB(A)	65	65	65
Air flow (Cooling / Heating)		m3/h	1620/1620	1620/1620	2160/2160
Static pressure (nominal conditions, maximum)		Pa	-	-	-
Dimensions (H x W x D)		mm	570x750x280	570x750x280	650x850x298
Weight		kg	38.0	38.0	45.0
Colour (Munsell Code)					
Power supply			AC 220-240V/1ph/50Hz	AC 220-240V/1ph/50Hz	AC 220-240V/1ph/50Hz
Recommended fuse size		A	16	16	16
Starting current		A	3.2/4.3	3.2/4.3	9.9
Running current		A	RAI: 3.20-2.93 / 4.30-3.96 RAD: 3.19-2.93 / 4.45-4.08	RAI: 5.05-4.63 / 6.24-5.72 RAD: 5.69-5.22 / 7.81-7.15	RAI: 9.1-8.37 / 9.87–9.05 RAD: 9.1-8.37 / 9.87-9.05
Cable section		mm2	2	2	2
Interconnection between indoor unit and outdoor unit		mm2	2	2	2
Piping diameter (Liq / Gas)			1/4" / 3/8"	1/4" / 3/8"	1/4" / 1/2"
Minimum piping length		m	5.0	5.0	5.0
Maximum piping length / height difference		m	20 / 10	20 / 10	20 / 10
Current quantity of refrigerant / Chargeless		kg	1.15	1.15	1.40
Chargeless / Additional refrigerant charge		m / g/m	20/-	20/-	20/-
Working range (cooling / heating)		°C	-10 ~ 43 / -15 ~ 21	-10 ~ 43 / -15 ~ 21	-10 ~ 43 / -15 ~ 21
Refrigerant			R410A	R410A	R410A
Condenser Fan			Propeller Fan		
Compressor	Type		2 Cylinder Rotary	2 Cylinder Rotary	2 Cylinder Rotary
	Oil Type		HAF68D1/α68HES-H	HAF68D1/α68HES-H	HAF68D1/α68HES-H
	Oil Charge	ml	380	380	480
	Coil Resistance	Ω	1.05 at 20°C	1.05 at 20°C	1.05 at 20°C
			1.28 at 75°C	1.28 at 75°C	1.28 at 75°C
	Quantity		1	1	1

NOTE:

1. *The nominal cooling and heating capacity is the combined capacity of the HITACHI standard split system, and are based on the ISO 5151.*

Operation Conditions		*Cooling*	*Heating*
Indoor Air Inlet Temperature	***dB***	*27.0 °C*	*20.0 °C*
	WB	*19.0 °C*	
Outdoor Air Inlet Temperature	***dB***	*35.0 °C*	*7.0 °C*
	WB		*6.0 °C*
***Piping Length**: 5.0 meters; **Piping Lift**: 0 meter* ***dB**: Dry Bulb; **WB**: Wet Bulb*			

2. *The Sound Pressure Level is based on the following conditions:*

- *1.4 meter from Discharge grille*

The above data was measured in an anechoic chamber. Please take into consideration reflected sound of your specific site

2.1.8. MULTIZONE OUTDOOR (RAM-36NP2A/53NP2A/53NP3A/68NP3A/70NP4A/90NP5A/130NP6A)

OUTDOOR		UNIT	RAM-36NP2A	RAM-53NP2A	RAM-53NP3A	RAM-68NP3A
Minimum / Maximum indoor units connectable			2	2	2 / 3	2 / 3
Minimum / Maximum connected capacity			3.6kW	5.3kW	5.3kW	6.8kW
Nominal Cooling capacity (min - max)		kW	3.6 (1.5-4.0)	5.3 (1.5-6.6)	5.3 (1.5-6.6)	6.8 (2.40-8.80)
Nominal Heating capacity (min - max)		kW	5.2 (1.5-5.5)	6.8 (1.5-7.2)	6.8 (1.5-7.2)	8.5 (2.8-9.5)
Nominal cooling power input (min - max)		kW	0.97 (0.20-1.05)	1.53 (0.20-1.66)	1.56 (0.20-1.68)	2.12 (0.46-3.20)
Nominal heating power input (min - max)		kW	1.25 (0.20-1.50)	1.79 (0.20-2.01)	1.69 (0.20-1.86)	2.28 (0.48-3.12)
EER / COP			3.71/4.16	3.47/3.80	3.41/4.03	3.21/3.73
SEER / SCOP			6.6/4.2	6.1/4.0	6.1/4.0	5.8/4.0
Energy class (SEER/SCOP)			A++/A+	A++/A+	A++/A+	A+/A+
Noise level cooling (sound pressure)		dB(A)	49	52	52	53
Noise level heating (sound pressure)		dB(A)	51	53	53	56
Noise level (sound power)		dB(A)	65	65	65	65
Air flow (Cooling / Heating)		m^3/h	1620 / 1620	2160 / 2160	2160 / 2160	2700 / 2700
Static pressure (nominal conditions, maximum)		Pa	-	-	-	-
Dimensions (H x W x D)		mm	570x750x280	650x850x298	650x850x298	800x850x298
Weight		kg	40.0	50.0	50.0	55.0
Colour (Munsell Code)			Beige (5Y 7/2)	Beige (5Y 7/2)	Beige (5Y 7/2)	Beige (5Y 7/2)
Power supply			1Phase 220-240V 50/60Hz	220-240V/1ph/ 50/60Hz	220-240V/1ph/ 50/60Hz	220-240V/1ph/ 50/60Hz
Recommended fuse size		A	16	16	16	16
Starting current		A	5.8	11.0	11.0	10..5
Running current		A	4.50-4.10 / 5.70-5.30	7.00-6.40/ 8.20-7.50	7.14-6.54/ 7.71-7.10	9.73-8.92/ 10.50-9.60
Cable section		mm^2	4	4	4	4
Interconnection between indoor unit and outdoor unit		mm^2	2	1.6 or 2.0	1.6 or 2.0	1.6 or 2.0
Piping diameter (Liq / Gas)			1/4" x 2 / 3/8" x 2	1/4" x 2 / 3/8" x 2	1/4" x 3 / 3/8" x 3	1/4" x 3 / 3/8" x 3
Minimum piping length		m	5.0	5.0	5.0	5.0
Maximum piping length / height difference		m	35 / 20	35 / 20	45 / 20	60 / 20
Current quantity of refrigerant / Chargeless		kg	1.45	1.65	1.65	2.30
Chargeless / Additional refrigerant charge		m / g/m	35/-	35/-	35/20	30/20
Working range (cooling / heating)		°C	-10 ~ 43 / -15 ~ 21	-10 ~ 43 / -15 ~ 21	-10 ~ 43 / -15 ~ 21	-10 ~ 43 / -15 ~ 21
Refrigerant			R410A	R410A	R410A	R410A
Condenser Fan			Propeller Fan			
Compressor	Type		2 Cylinder Rotary	2 Cylinder Rotary	2 Cylinder Rotary	2 Cylinder Rotary
	Oil Type		HAF68D1/ α68HES-H	HAF68D1/ α68HES-H	HAF68D1 /α68HES-H	HAF68D1/ α68HES-H
	Oil Charge	ml	480	480	480	840
	Coil Resistance	Ω	1.268 at 25°C	1.063 at 25°C	1.063 at 25°C	1.063 at 25°C
			1.512 at 75°C	1.268 at 75°C	1.268 at 75°C	1.268 at 75°C
	Quantity		1	1	1	1

NOTE:

The nominal cooling and heating capacity is the combined capacity of the HITACHI standard split system, and are based on the ISO 5151.

Operation Conditions		***Cooling***	***Heating***
Indoor Air Inlet Temperature	***dB***	*27.0 °C*	*20.0 °C*
	WB	*19.0 °C*	
Outdoor Air Inlet Temperature	***dB***	*35.0 °C*	*7.0 °C*
	WB		*6.0 °C*
***Piping Length**: 5.0 meters; **Piping Lift**: 0 meter* ***dB**: Dry Bulb; **WB**: Wet Bulb*			

The Sound Pressure Level is based on the following conditions:

1.5 meter beneath the Unit

The above data was measured in an anechoic chamber. Please take into consideration reflected sound of your specific site

OUTDOOR		UNIT	RAM-70NP4A	RAM-90NP5A	RAM-130NP6A
Minimum / Maximum indoor units connectable			2 / 4	2 / 5	2/3 (units per ref. cycle)
Minimum / Maximum connected capacity			7.0kW	8.5Kw	12.6kW
Nominal Cooling capacity (min - max)		kW	7.0 (2.4-8.8)	8.5 (1.5-9.5)	12.6 (1.5-13.2)
Nominal Heating capacity (min - max)		kW	8.5 (2.8-9.5)	11.0 (1.5-11.5)	14.4 (1.5-14.4)
Nominal cooling power input (min - max)		kW	2.11 (0.46-3.20)	2.23 (0.20-3.85)	4.19 (0.2-4.4)
Nominal heating power input (min - max)		kW	2.11 (0.48-3.12)	2.46 (0.20-3.85)	3.8 (0.2-4.22)
EER / COP			3.32/4.03	3.81/4.47	3.01/3.79
SEER / SCOP			5.7/3.8	5.3/4.8	-
Energy class (SEER/SCOP)			A+/A	A/A++	A/A
Noise level cooling (sound pressure)		dB(A)	53	55	55
Noise level heating (sound pressure)		dB(A)	56	58	56
Noise level (sound power)		dB(A)	68	68	68
Air flow (Cooling / Heating)		m^3/h	2700 / 2700	3900 / 3900	4320 / 4320
Static pressure (nominal conditions, maximum)		Pa	-	-	-
Dimensions (H x W x D)		mm	800x850x298	800x950x370	1450x855x308
Weight		kg	55.0	71.0	113.0
Colour (Munsell Code)			Beige (5Y 7/2)	Beige (5Y 7/2)	Beige (5Y 7/2)
Power supply			220-240V/1ph/ 50/60Hz	220-240V/1ph/ 50/60Hz	220-240V/1ph/ 50/60Hz
Recommended fuse size		A	30	30	30
Starting current		A	9.7	16.0	20.0
Running current		A	9.70-8.90/9.70-8.90	10.20-9.40/11.30-10.40	19.20-17.60/17.40-16.00
Cable section		mm^2	4	4	4
Interconnection between indoor unit and outdoor unit		mm^2	1.6 or 2.0	1.6 or 2.0	1.6 or 2.0
Piping diameter (Liq / Gas)			(1/4" x 4) / (3/8" x 3 + 1/2" x 1)	1/4" x 5 / (3/8" x 3) + (1/2" x 2)	(1/4" x 6 / 3/8") x 6
Minimum piping length		m	5.0	5.0	5.0
Maximum piping length / height difference		m	60 / 20	75 / 20	45/45 / 20/20
Current quantity of refrigerant / Chargeless		kg	2.30	2.70	1.65
Chargeless / Additional refrigerant charge		m / g/m	30/20	30/15	35/20
Working range (cooling / heating)		°C	-10 ~ 43 / -15 ~ 21	-10 ~ 43 / -15 ~ 21	-10 ~ 43 / -15 ~ 21
Refrigerant			R410A	R410A	R410A
Condenser Fan			Propeller Fan		
Compressor	Type		2 Cylinder Rotary	2 Cylinder Rotary	2 Cylinder Rotary
	Oil Type		HAF68D1/ α68HES-H	HAF68D1/ α68HES-H	HAF68D1/ α68HES-H
	Oil Charge	ml	840	1000	960
	Coil Resistance	Ω	1.05 at 20°C	0.41 at 20°C	1.063 at 25°C
			1.268 at 75°C	0.50 at 75°C	1.268 at 75°C
	Quantity		1	1	2

NOTE:

The nominal cooling and heating capacity is the combined capacity of the HITACHI standard split system, and are based on the ISO 5151.

Operation Conditions		***Cooling***	***Heating***
Indoor Air Inlet Temperature	***dB***	*27.0 °C*	*20.0 °C*
	WB	*19.0 °C*	
Outdoor Air Inlet Temperature	***dB***	*35.0 °C*	*7.0 °C*
	WB		*6.0 °C*
***Piping Length**: 5.0 meters; **Piping Lift**: 0 meter* ***dB**: Dry Bulb; **WB**: Wet Bulb*			

2. The Sound Pressure Level is based on the following conditions:

- *1.5 meter beneath the Unit*

The above data was measured in an anechoic chamber. Please take into consideration reflected sound of your specific site

2.2. MONO SPLIT

2.2.1. WALL TYPE (RAK-18PSA/25PSA/35PSA)

INDOOR	Unit	RAK-18PSA	RAK-25PSA	RAK-35PSA
Nominal capacity adjustable		no	no	no
Nominal Cooling capacity (min - max)	kW	1.8 (0.5-2.8)	2.5 (0.5-3.4)	3.5 (0.5-4.1)
Cooling sensible capacity	kW	1.8	2.2	2.7
Nominal Heating capacity (min - max)	kW	2.3 (0.6-4.6)	3.2 (0.6-5.5)	4.0 (0.6-6.6)
Noise level cooling (sound pressure) (SL / L / M / H)	dB(A)	22/28/34/40	22/28/34/42	23/28/34/44
Noise level heating (sound pressure) (SL / L / M / H)	dB(A)	22/30/34/41	22/30/34/42	23/30/34/44
Noise level (sound power)	dB(A)	54	56	58
Air flow cooling mode (SL / L / M / H)	m^3/h	260/300/420/470	260/320/420/510	270/320/420/520
Air flow heating mode (SL / L / M / H)	m^3/h	260/300/420/540	260/370/520/600	270/410/520/610
Fan Motor	W	30	30	30
Drain pump pressure lift	cm	-	-	-
Static pressure (SL / L / M / H) (nominal conditions SP 00)	Pa	-	-	-
Dehumidification	l/h	1.2	1.4	1.6
Included drain pump		-	-	-
Max. height available for drain pump (RAD/RAI only)		-	-	-
Dimensions (H x W x D)	mm	295x798x258	295x798x258	295x798x258
Panel dimensions (H x W x D)	mm	-	-	-
Weight	kg	12	12	12
Colour (Munsell Code)		Pure White (N9.25)	Pure White (N9.25)	Pure White (N9.25)
Condensate Drain	mm	φ16	φ16	φ16
Panel weight	kg	-	-	-
Panel reference		-	-	-
Color of the panel (RAL)		-	-	-
Running current	A	2.81/3.37	4.63/4.54	2.97/3.82
Power supply		220-230V	220-230V	220-230V
Cable section	mm^2	3x1.50	3x1.50	3x1.50
Piping diameter (Liq / Gas)		1/4" - 1/2"	1/4" - 1/2"	1/4" - 1/2"
Drain diameter (ext)	mm	φ16	φ16	φ16
Remote control (standard/optional) *		RAR-5J1/-	RAR-5J1/-	RAR-5J1/-
Filter				
ACL Filter		Wasabi (optional)	Wasabi (optional)	Wasabi (optional)
Dimensions (H x W x D)	mm	48x243x5	48x243x5	48x243x5
Pre-filter (Standard / Optional)		Micro Mesh Stainless/-	Micro Mesh Stainless/-	Micro Mesh Stainless/-

*more information regarding remote control can be found in Chapter 9

NOTE:

1. *The nominal cooling and heating capacity is the combined capacity of the HITACHI standard split system, and are based on the ISO 5151.*

Operation Conditions		*Cooling*	*Heating*
Indoor Air Inlet Temperature	***dB***	*27.0 °C*	*20.0 °C*
	WB	*19.0 °C*	
Outdoor Air Inlet Temperature	***dB***	*35.0 °C*	*7.0 °C*
	WB		*6.0 °C*
***Piping Length**: 5.0 meters; **Piping Lift**: 0 meter* ***dB**: Dry Bulb; **WB**: Wet Bulb*			

2. *The Sound Pressure Level is based on the following conditions:*

- *0.8 meter beneath indoor height center*
- *1 meter from Discharge grille*

The above data was measured in an anechoic chamber. Please take into consideration reflected sound of your specific site

2.2.2. WALL TYPE (RAC-18WSA/25WSA/35WSA)

OUTDOOR		UNIT	RAC-18WSA	RAC-25WSA	RAC-35WSA
Minimum / Maximum indoor units connectable			-	-	-
Minimum / Maximum connected capacity			-	-	-
Nominal Cooling capacity (min - max)		kW	1.8 (0.5-2.8)	2.5 (0.5-3.4)	3.5 (0.5-4.1)
Nominal Heating capacity (min - max)		kW	2.3 (0.6-4.8)	3.2 (0.6-5.8)	4.0 (0.6-6.6)
Nominal cooling power input (min - max)		kW	0.30 (0.07-0.88)	0.47 (0.07-0.96)	0.81 (0.07-1.35)
Nominal heating power input (min - max)		kW	0.38 (0.07-1.62)	0.57 (0.07-2.25)	0.79 (0.065-2.45)
EER / COP			6.00/6.13	5.32/5.61	4.35/5.06
SEER / SCOP			7.4/4.6	8.5/4.7	8.5/4.7
Energy class (SEER/SCOP)			A++/A++	A+++/A++	A+++/A++
Noise level cooling (sound pressure)		dB(A)	46	48	49
Noise level heating (sound pressure)		dB(A)	46	48	49
Noise level (sound power)		dB(A)	60	62	63
Air flow (Cooling / Heating)		m^3/h	1860 / 1620	1860 / 1620	1920 / 1620
Static pressure (nominal conditions, maximum)		Pa	-	-	-
Dimensions (H x W x D)		mm	600x792x299	600x792x299	600x792x299
Weight		kg	40	40	40
Colour (Munsell Code)			T-Beige (ZYY95)	T-Beige (ZYY95)	T-Beige (ZYY95)
Power supply			230V / 1Ph / 50Hz	230V / 1Ph / 50Hz	230V / 1Ph / 50Hz
Recommended fuse size		A	25	25	25
Starting current		A	1.89/2.27	2.81/3.37	4.63/4.54
Running current		A	1.89/2.27	2.81/3.37	4.63/4.54
Cable section		mm^2	3x1.50	3x1.50	3x1.50
Interconnection between indoor unit and outdoor unit		mm^2	3x1.50	3x1.50	3x1.50
Piping diameter (Liq / Gas)			1/4" - 1/2"	1/4" - 1/2"	1/4 – 1/2
Minimum piping length		m	5	5	5
Maximum piping length / height difference		m	20 / 10	20 / 10	20 / 10
Current quantity of refrigerant / Chargeless		kg	1.35	1.35	1.35
Chargeless / Additional refrigerant charge		m / g/m	20/-	20/-	20/-
Working range (cooling / heating)		°C	-10~43/-20~21	-10~43/-20~21	-10~43/-20~21
Refrigerant			R410A	R410A	R410A
Condenser Fan			Propeller Fan		
Compressor	Type		SCROLL	SCROLL	SCROLL
	Oil Type		POE	POE	POE
	Oil Charge	ml	380	380	380
	Coil Resistance	Ω	1.21 at 20°C	1.21 at 20°C	1.21 at 20°C
			1.47 at 75°C	1.47 at 75°C	1.47 at 75°C
	Quantity		1	1	1

NOTE:

1. *The Sound Pressure Level is based on the following conditions:*
   - *1 meter from the unit front surface and 1 meter from floor level*
   - The above data was measured in an anechoic chamber. Please take into consideration reflected sound of your specific site

2.2.3. WALL TYPE (RAK-18PSAN/25PSAN/35PSAN)

INDOOR	Unit	RAK-18PSAN	RAK-25PSAN	RAK-35PSAN
Nominal capacity adjustable		no	no	No
Nominal Cooling capacity (min - max)	kW	1.8 (*-*)	2.5 (*-*)	3.5 (*-*)
Cooling sensible capacity	kW	1.7	2.2	2.6
Nominal Heating capacity (min - max)	kW	2.3 (*-*)	3.2 (*-*)	4.0 (*-*)
Noise level cooling (sound pressure) (SL / L / M / H)	dB(A)	22/28/34/40	22/28/34/42	23/28/34/44
Noise level heating (sound pressure) (SL / L / M / H)	dB(A)	22/30/34/41	22/30/34/42	23/30/34/44
Noise level (sound power)	dB(A)	54	56	58
Air flow cooling mode (SL / L / M / H)	m^3/h	TBA	TBA	TBA
Air flow heating mode (SL / L / M / H)	m^3/h	22/30/34/41	22/30/34/42	23/30/34/44
Fan Motor	W	30	30	30
Drain pump pressure lift	cm	-	-	-
Static pressure (SL / L / M / H) (nominal conditions SP 00)	Pa	-	-	-
Dehumidification	l/h	1.2	1.4	1.6
Included drain pump		-	-	-
Max. height available for drain pump (RAD/RAI only)		-	-	-
Dimensions (H x W x D)	mm	295x798x258	295x798x258	295x798x258
Panel dimensions (H x W x D)	mm	-	-	-
Weight	kg	12	12	12
Colour (Munsell Code)		Pure White (N9.25)	Pure White (N9.25)	Pure White (N9.25)
Condensate Drain	mm	-	-	-
Panel weight	kg	-	-	-
Panel reference		-	-	-
Color of the panel (RAL)		-	-	-
Running current	A	1.89/2.27	2.81/3.37	4.63/4.54
Power supply		220-230V	220-230V	220-230V
Cable section	mm^2	*	*	*
Piping diameter (Liq / Gas)		1/4" - 1/2"	1/4" - 1/2"	1/4" - 1/2"
Drain diameter (ext)	mm	φ16	φ16	φ16
Remote control (standard/optional) *		RAR-5J2/-	RAR-5J2/-	RAR-5J2/-
Filter				
ACL Filter		Wasabi (optional)	Wasabi (optional)	Wasabi (optional)
Dimensions (H x W x D)	mm	48x243x5	48x243x5	48x243x5
Pre-filter (Standard / Optional)		Micro Mesh Stainless/-	Micro Mesh Stainless/-	Micro Mesh Stainless/-

*more information regarding remote control can be found in Chapter 9

NOTE:

1. *The nominal cooling and heating capacity is the combined capacity of the HITACHI standard split system, and are based on the ISO 5151.*

Operation Conditions		*Cooling*	*Heating*
Indoor Air Inlet Temperature	***dB***	*27.0 °C*	*20.0 °C*
	WB	*19.0 °C*	
Outdoor Air Inlet Temperature	***dB***	*35.0 °C*	*7.0 °C*
	WB		*6.0 °C*
***Piping Length**: 5.0 meters; **Piping Lift**: 0 meter* ***dB**: Dry Bulb; **WB**: Wet Bulb*			

2. *The Sound Pressure Level is based on the following conditions:*

- *0.8 meter beneath indoor height center*
- *1 meter from Discharge grille*

The above data was measured in an anechoic chamber. Please take into consideration reflected sound of your specific site

2.2.4. WALL TYPE (RAC-18WSAN/25WSAN/35WSAN)

OUTDOOR		UNIT	RAC-18WSAN	RAC-25WSAN	RAC-35WSAN
Minimum / Maximum indoor units connectable			-	-	-
Minimum / Maximum connected capacity			no	no	No
Nominal Cooling capacity (min - max)		kW	1.8 (*-*)	2.5 (*-*)	3.5 (*-*)
Nominal Heating capacity (min - max)		kW	2.3 (*-*)	3.2 (*-*)	4.0 (*-*)
Nominal cooling power input (min - max)		kW	0.30 (*-*)	0.47 (*-*)	0.81 (*-*)
Nominal heating power input (min - max)		kW	0.38 (*-*)	0.57 (*-*)	0.79 (*-*)
EER / COP			6.00/6.13	5.32/5.61	4.35/5.06
SEER / SCOP			-	-	-
Energy class (SEER/SCOP)			-	-	-
Noise level cooling (sound pressure)		dB(A)	46	48	49
Noise level heating (sound pressure)		dB(A)	46	48	49
Noise level (sound power)		dB(A)	60	62	63
Air flow (Cooling / Heating)		m^3/h	1860 / 1620	1860 / 1620	1920 / 1620
Static pressure (nominal conditions, maximum)		Pa	-	-	-
Dimensions (H x W x D)		mm	600x792x299	600x792x299	600x792x299
Weight		kg	41	41	41
Colour (Munsell Code)			T-Beige (ZYY95)	T-Beige (ZYY95)	T-Beige (ZYY95)
Power supply			230V / 1Ph / 50Hz	230V / 1Ph / 50Hz	230V / 1Ph / 50Hz
Recommended fuse size		A	25	25	25
Starting current		A	TBC by June	TBC by June	TBC by June
Running current		A	1.89/2.27	2.81/3.37	4.63/4.54
Cable section		mm^2	3x1.50	3x1.50	3x1.50
Interconnection between indoor unit and outdoor unit		mm^2	3x1.50	3x1.50	3x1.50
Piping diameter (Liq / Gas)			1/4" - 1/2"	1/4" - 1/2"	1/4" - 1/2"
Minimum piping length		m	5	5	5
Maximum piping length / height difference		m	20 / 10	20 / 10	20 / 10
Current quantity of refrigerant / Chargeless		kg	1.4	1.4	1.4
Chargeless / Additional refrigerant charge		m / g/m	20/-	20/-	20/-
Working range (cooling / heating)		°C	-10~43/-20~21	-10~43/-20~21	-10~43/-20~21
Refrigerant			R410A	R410A	R410A
Condenser Fan			Propeller Fan		
Compressor	Type		SCROLL	SCROLL	SCROLL
	Oil Type		POE	POE	POE
	Oil Charge	ml	380	380	380
	Coil Resistance	Ω	1.21 at 20°C	1.21 at 20°C	1.21 at 20°C
			1.47 at 75°C	1.47 at 75°C	1.47 at 75°C
	Quantity		1	1	1

NOTE:

1. *The Sound Pressure Level is based on the following conditions:*
   - *1 meter from the unit front surface and 1 meter from floor level*
   - *The above data was measured in an anechoic chamber. Please take into consideration reflected sound of your specific site*

2.2.5. WALL TYPE (RAK-18PSPA/25PSPA/35PSPA)

INDOOR	Unit	RAK-18PSPA	RAK-25PSPA	RAK-35PSPA
Nominal capacity adjustable		no	no	no
Nominal Cooling capacity (min - max)	kW	1.8 (0.5 - 2.8)	2.5 (0.5 - 3.4)	3.5 (0.5 - 4.1)
Cooling sensible capacity	kW	1.8	2.2	2.7
Nominal Heating capacity (min - max)	kW	2.3(0.6 -4.8)	3.2(0.6 -5.8)	4.0(0.6 - 6.6)
Noise level cooling (sound pressure) (SL / L / M / H)	dB(A)	23/28/34/40	23/28/34/42	24/28/34/44
Noise level heating (sound pressure) (SL / L / M / H)	dB(A)	23/30/35/41	23/30/35/42	24/30/35/44
Noise level (sound power)	dB(A)	54	56	58
Air flow cooling mode (SL / L / M / H)	m^3/h	250/280/420/490	260/290/430/520	270/300/440/600
Air flow heating mode (SL / L / M / H)	m^3/h	280/340/500/580	300/370/510/620	320/450/520/640
Fan Motor	W	25	25	25
Drain pump pressure lift	cm	-	-	-
Static pressure (SL / L / M / H) (nominal conditions SP 00)	Pa	-	-	-
Dehumidification	l/h	1.2	1.4	1.6
Included drain pump		-	-	-
Max. height available for drain pump (RAD/RAI only)		-	-	-
Dimensions (H x W x D)	mm	280 x 780 x 218	280 x 780 x 218	280 x 780 x 218
Panel dimensions (H x W x D)	mm	-	-	-
Weight	kg	0	0	0
Colour (Munsell Code)		Pure White (ZYYK2)	Pure White (ZYYK2)	Pure White (ZYYK2)
Condensate Drain	mm	φ16	φ16	φ16
Panel weight	kg	-	-	-
Panel reference		-	-	-
Color of the panel (RAL)		-	-	-
Running current	A	-	-	-
Power supply		35 V DC from outdoor unit	35 V DC from outdoor unit	35 V DC from outdoor unit
Cable section	mm²	-	-	-
Piping diameter (Liq / Gas)		1/4" – 1/2"	1/4" - 1/2"	1/4" - 1/2"
Drain diameter (ext)	mm	φ16	φ16	φ16
Remote control (standard/optional) *		RAR-5E2/SPX-RCDB	RAR-5E2/SPX-RCDB	RAR-5E2/SPXRCDB
Filter				
ACL Filter		Wasabi (optional)	Wasabi (optional)	Wasabi (optional)
Dimensions (H x W x D)	mm	48x243x5	48x243x5	48x243x5
Pre-filter		Washable / Stainless	Washable / Stainless	Washable / Stainless

*more information regarding remote control can be found in Chapter 9

.

NOTE:

1. *The nominal cooling and heating capacity is the combined capacity of the HITACHI standard split system, and are based on the ISO 5151.*

Operation Conditions		*Cooling*	*Heating*
Indoor Air Inlet Temperature	***dB***	*27.0 °C*	*20.0 °C*
	WB	*19.0 °C*	
Outdoor Air Inlet Temperature	***dB***	*35.0 °C*	*7.0 °C*
	WB		*6.0 °C*
***Piping Length**: 5.0 meters; **Piping Lift**: 0 meter* ***dB**: Dry Bulb; **WB**: Wet Bulb*			

2. *The Sound Pressure Level is based on the following conditions:*

- *0.8 meter beneath indoor height center*
- *1 meter from Discharge grille*

The above data was measured in an anechoic chamber. Please take into consideration reflected sound of your specific site

2.2.6. WALL TYPE (RAC-18WSPA/25WSPA/35WSPA)

OUTDOOR		UNIT	RAC-18WSPA	RAC-25WSPA	RAC-35WSPA
Minimum / Maximum indoor units connectable			-	-	-
Minimum / Maximum connected capacity			no	no	no
Nominal Cooling capacity (min - max)		kW	1.8 (0.5 - 2.8)	2.5 (0.5 - 3.4)	3.5 (0.5 - 4.1)
Nominal Heating capacity (min - max)		kW	2.3(0.6 -4.8)	3.2(0.6 -5.8)	4.0(0.6 - 6.6)
Nominal cooling power input (min - max)		kW	0.300（0.070-0.880）	0.490（0.070-0.960）	0.845（0.070-1.350）
Nominal heating power input (min - max)		kW	0.375（0.065-1.620）	0.585（0.065-2.250）	0.830（0.065-2.450）
EER / COP			6.00/6.13	5.10/5.47	4.14/4.82
SEER / SCOP			7.2/4.6	7.7/4.7	7.7/4.7
Energy class (SEER/SCOP)			A++/A++	A++/A++	A++/A++
Noise level cooling (sound pressure)		dB(A)	46	48	49
Noise level heating (sound pressure)		dB(A)	46	48	49
Noise level (sound power)		dB(A)	60	62	63
Air flow (Cooling / Heating)		m^3/h	1860 / 1620	1860 / 1620	1920 / 1620
Static pressure (nominal conditions, maximum)		Pa	-	-	-
Dimensions (H x W x D)		mm	600x792x299	600x792x299	600x792x299
Weight		kg	41	41	41
Colour (Munsell Code)			T-Beige (ZYY95)	T-Beige (ZYY95)	T-Beige (ZYY95)
Power supply			230V / 1Ph / 50Hz	230V / 1Ph / 50Hz	230V / 1Ph / 50Hz
Recommended fuse size		A	25	25	25
Starting current		A	1.73/2.14	2.69/3.11	4.35/4.26
Running current		A	1.73/2.14	2.69/3.11	4.35/4.26
Cable section		mm^2	3x1.50	3x1.50	3x1.50
Interconnection between indoor unit and outdoor unit		mm^2	2x0.75	2x0.75	2x0.75
Piping diameter (Liq / Gas)			1/4” - 1/2”	1/4” - 1/2”	1/4” - 1/2”
Minimum piping length		m	5	5	5
Maximum piping length / height difference		m	20 / 10	20 / 10	20 / 10
Current quantity of refrigerant / Chargeless		kg	0	0	0
Chargeless / Additional refrigerant charge		m / g/m	20/-	20/-	20/-
Working range (cooling / heating)		°C	-10-43/-20-21	-10-43/-20-21	-10-43/-20-21
Refrigerant			R410A	R410A	R410A
Condenser Fan			Propeller fan		
Compressor	Type		SCROLL	SCROLL	SCROLL
	Oil Charge		380	380	380
	Oil Type	ml	POE	POE	POE
	Coil Resistance	Ω	1.21 at 20°C	1.21 at 20°C	1.21 at 20°C
	Quantity		1	1	1

NOTE:

1. *The Sound Pressure Level is based on the following conditions:*

- *1 meter from the unit front surface and 1 meter from floor level*

The above data was measured in an anechoic chamber. Please take into consideration reflected sound of your specific site

2.2.7. WALL TYPE (RAK-25PXA/35PXA/50PXA)

INDOOR	Unit	RAK-25PXA	RAK-35PXA	RAK-50PXA
Nominal capacity adjustable		-	-	-
Nominal Cooling capacity (min - max)	kW	2.5(0.9-3.1)	3.5(0.9-4.0)	5.0 (0.9-5.2)
Cooling sensible capacity	kW	2.1	2.6	3.4
Nominal Heating capacity (min - max)	kW	3.4(0.9-4.4)	4.2(0.9-5.0)	6.3 (0.9-7.9)
Noise level cooling (sound pressure) (SL / L / M / H)	dB(A)	20/26/32/40	22/29/35/42	25/31/39/47
Noise level heating (sound pressure) (SL / L / M / H)	dB(A)	20/27/33/40	22/30/35/42	25/31/39/48
Noise level (sound power)	dB(A)	54	56	60
Air flow cooling mode (SL / L / M / H)	m^3/h	210/270/370/480	230/300/400/520	288/408/552/690
Air flow heating mode (SL / L / M / H)	m^3/h	200/330/420/570	220/360/450/610	288/438/576/780
Fan Motor	W	25	25	25
Drain pump pressure lift	cm	-	-	-
Static pressure (SL / L / M / H) (nominal conditions SP 00)	Pa	-	-	-
Dehumidification	l/h	1.4	1.6	3.0
Included drain pump		-	-	-
Max. height available for drain pump (RAD/RAI only)		-	-	-
Dimensions (H x W x D)	mm	295×795×198	295×795×198	295x795x198
Panel dimensions (H x W x D)	mm	-	-	-
Weight	kg	10	10	10.0
Colour (Munsell Code)		White (ZYYD6)	White (ZYYD6)	White (ZYYD6)
Condensate Drain	mm	φ16	φ16	φ16
Panel weight	kg	-	-	-
Panel reference		-	-	-
Color of the panel (RAL)		-	-	-
Running current	A	2.97/3.82	4.21/4.62	6.83/7.66
Power supply		35 V DC from outdoor unit	35 V DC from outdoor unit	36 V DC from outdoor unit
Cable section	mm^2	0.75x2	0.75x2	2.0x3
Piping diameter (Liq / Gas)		1/4” - 3/8”	1/4” - 3/8”	1/4" / 1/2"
Drain diameter (ext)	mm	φ16	φ16	φ16
Remote control (standard/optional) *		RAR-5E3/SPX-RCDB	RAR-5E3/SPX-RCDB	RAR-5E3/SPX-RCDB
Filter				
ACL Filter		Wasabi	Wasabi	Wasabi
Dimensions (H x W x D)	mm	48x243x5	48x243x5	48x243x5
Pre-filter (Standard / Optional)		Nano Stainless/-	Nano Stainless/-	Nano Stainless/-

NOTE:

1. *The nominal cooling and heating capacity is the combined capacity of the HITACHI standard split system, and are based on the ISO 5151.*

Operation Conditions		*Cooling*	*Heating*
Indoor Air Inlet Temperature	***dB***	*27.0 °C*	*20.0 °C*
	WB	*19.0 °C*	
Outdoor Air Inlet Temperature	***dB***	*35.0 °C*	*7.0 °C*
	WB		*6.0 °C*
***Piping Length**: 5.0 meters; **Piping Lift**: 0 meter* ***dB**: Dry Bulb; **WB**: Wet Bulb*			

2. *The Sound Pressure Level is based on the following conditions:*

- *Half height of the unit*
- *1 meter from Discharge grille*

The above data was measured in an anechoic chamber. Please take into consideration reflected sound of your specific site

2.2.8. WALL TYPE (RAC-25WXA/35WXA/50WXA)

OUTDOOR		UNIT	RAC-25WXA	RAC-35WXA	RAC-50WXA
Minimum / Maximum indoor units connectable			-	-	-
Minimum / Maximum connected capacity			-	-	-
Nominal Cooling capacity (min - max)		kW	2.5(0.9-3.1)	3.5(0.9-4.0)	5.0 (0.9-5.2)
Nominal Heating capacity (min - max)		kW	3.4(0.9-4.4)	4.2(0.9-5.0)	6.3 (0.9-7.9)
Nominal cooling power input (min - max)		kW	0.58（0.25-1.29）	0.92（0.25-1.30）	1.555(0.155-2.200)
Nominal heating power input (min - max)		kW	0.79（0.25-1.25）	1.01（0.25-1.30）	1.745(0.155-2.200)
EER / COP			4.31/4.30	3.80/4.16	3.22/3.61
SEER / SCOP			5.8/4.3	5.9/4.3	6.0/4.2
Energy class (SEER/SCOP)			A+/A+	A+/A+	A+/A+
Noise level cooling (sound pressure)		dB(A)	46	47	50
Noise level heating (sound pressure)		dB(A)	47	49	52
Noise level (sound power)		dB(A)	60	61	65
Air flow (Cooling / Heating)		m^3/h	1860 / 1620	1920 / 1620	1950 /1750
Static pressure (nominal conditions, maximum)		Pa	no	no	No
Dimensions (H x W x D)		mm	548×750×288	548×750×288	600x792x299
Weight		kg	31	35	42
Colour (Munsell Code)			T-Beige (ZYY95)	T-Beige (ZYY95)	T-Beige (ZYY95)
Power supply			230V / 1Ph / 50Hz	230V / 1Ph / 50Hz	230V / 1Ph / 50Hz
Recommended fuse size		A	15	15	16
Starting current		A	2.97/3.82	4.21/4.62	8
Running current		A	2.97/3.82	4.21/4.62	6.83/7.66
Cable section		mm^2	3x1.50	3x1.50	3x2.0
Interconnection between indoor unit and outdoor unit		mm^2	2x0.75	2x0.75	2x2.0
Piping diameter (Liq / Gas)			1/4” - 3/8”	1/4” - 3/8”	1/4" / 1/2"
Minimum piping length		m	5	5	5
Maximum piping length / height difference		m	20 / 10	20 / 10	30 / 10
Current quantity of refrigerant / Chargeless		kg	0.87	1.05	1.35
Chargeless / Additional refrigerant charge		m / g/m	20/-	20/-	20/-
Working range (cooling / heating)		°C	-10℃– 43℃/-15℃–21℃	-10℃– 43℃/-15℃–21℃	-10 ~ 43 / -15 ~ 21
Refrigerant			R410A	R410A	R410A
Condenser Fan			Propeller Fan		
Compressor	Type		ROTARY	ROTARY	Scroll
	Oil Type		FV50S	FV50S	FV50S
	Oil Charge	ml	320	320	420
	Coil Resistance	Ω	0.858 at 20°C	0.858 at 20°C	0.74 at 20°C
			-	-	0.90 at 75°C
	Quantity		1	1	1

NOTE:

1. *The Sound Pressure Level is based on the following conditions:*

- *1 meter from the unit front surface and 1 meter from floor level*

The above data was measured in an anechoic chamber. Please take into consideration reflected sound of your specific site

2.2.9. WALL TYPE (RAK-18PPA/25PPA/35PPA)

INDOOR	Unit	RAK-18PPA	RAK-25PPA	RAK-35PPA
Nominal capacity adjustable		-	-	-
Nominal Cooling capacity (min - max)	kW	2.00 (0.90 - 2.50)	2.50 (0.90 - 3.10)	3.50 (0.90- 4.00)
Cooling sensible capacity	kW	1.9	2.1	3.2
Nominal Heating capacity (min - max)	kW	2.50 (0.90 - 3.20)	3.40 (0.90- 4.40)	4.20 (0.90- 5.00)
Noise level cooling (sound pressure) (SL / L / M / H)	dB(A)	21/27/33/37	22/24/33/40	25/26/36/43
Noise level heating (sound pressure) (SL / L / M / H)	dB(A)	19/28/34/38	20/21/34/41	26/27/36/44
Noise level (sound power)	dB(A)	51	54	57
Air flow cooling mode (SL / L / M / H)	m^3/h	312/350/400/440	333/370/430/510	333/400/485/600
Air flow heating mode (SL / L / M / H)	m^3/h	312/350/420/480	333/400/500/570	333/520/550/ 660
Fan Motor	W	25	25	25
Drain pump pressure lift	cm	-	-	-
Static pressure (SL / L / M / H) (nominal conditions SP 00)	Pa	-	-	-
Dehumidification	l/h	1.2	1.4	1.6
Included drain pump		no	no	no
Max. height available for drain pump (RAD/RAI only)		no	no	no
Dimensions (H x W x D)	mm	280x780x218	280x780x218	280x780x218
Panel dimensions (H x W x D)	mm	-	-	-
Weight	kg	7.5	7.5	7.5
Colour (Munsell Code)		White (N9.25)	White (N9.25)	White (N9.25)
Condensate Drain	mm	φ16	φ16	φ16
Panel weight	kg	-	-	-
Panel reference		-	-	-
Color of the panel (RAL)		-	-	-
Running current	A	2.65/2.84	3.58/4.25	5.00/5.03
Power supply		35 V DC from outdoor unit	35 V DC from outdoor unit	35 V DC from outdoor unit
Cable section	mm^2	0.75x2	0.75x2	0.75x2
Piping diameter (Liq / Gas)		1/4" - 3/8"	1/4" - 3/8"	1/4" - 3/8"
Drain diameter (ext)	mm	φ16	φ16	φ16
Remote control (standard/optional) *		RAR-5E2/SPX-RCDB	RAR-5E2/ SPX-RCDB	RAR-5E2/ SPX-RCDB
Filter				
ACL Filter		Wasabi	Wasabi	Wasabi
Dimensions (H x W x D)	mm	48x243x5	48x243x5	48x243x5
Pre-filter (Standard / Optional)		Washable/Stainless	Washable/Stainless	Washable/Stainless

NOTE:

1. *The nominal cooling and heating capacity is the combined capacity of the HITACHI standard split system, and are based on the ISO 5151.*

Operation Conditions		*Cooling*	*Heating*
Indoor Air Inlet Temperature	***dB***	*27.0 °C*	*20.0 °C*
	WB	*19.0 °C*	
Outdoor Air Inlet Temperature	***dB***	*35.0 °C*	*7.0 °C*
	WB		*6.0 °C*
***Piping Length**: 5.0 meters; **Piping Lift**: 0 meter* ***dB**: Dry Bulb; **WB**: Wet Bulb*			

2. *The Sound Pressure Level is based on the following conditions:*

- *Half height of the unit*
- *1 meter from Discharge grille*

The above data was measured in an anechoic chamber. Please take into consideration reflected sound of your specific site

2.2.10. WALL TYPE (RAC-18WPA/25WPA/35WPA)

OUTDOOR		UNIT	RAC-18WPA	RAC-25WPA	RAC-35WPA
Minimum / Maximum indoor units connectable			-	-	-
Minimum / Maximum connected capacity			-	-	-
Nominal Cooling capacity (min - max)		kW	2.00 (0.90 - 2.50)	2.50 (0.90 - 3.10)	3.50 (0.90- 4.00)
Nominal Heating capacity (min - max)		kW	2.50 (0.90 - 3.20)	3.40 (0.90- 4.40)	4.20 (0.90- 5.00)
Nominal cooling power input (min - max)		kW	0.55 (0.25 - 1.01)	0.70 (0.25 - 1.29)	1.090 (0.25 - 1.46)
Nominal heating power input (min - max)		kW	0.58 (0.25 - 0.97)	0.88 (0.25 - 1.25)	1.100(0.25 - 1.70)
EER / COP			3.64/4.31	3.57/3.86	3.21/3.82
SEER / SCOP			5.8/4.2	5.8/4.2	5.9/4.3
Energy class (SEER/SCOP)			A+/A+	A+/A+	A+/A+
Noise level cooling (sound pressure)		dB(A)	46	48	49
Noise level heating (sound pressure)		dB(A)	47	49	50
Noise level (sound power)		dB(A)	60	62	63
Air flow (Cooling / Heating)		m^3/h	1860 / 1620	1860 / 1620	1920 / 1620
Static pressure (nominal conditions, maximum)		Pa	-	-	-
Dimensions (H x W x D)		mm	505x700x258	505x700x258	548×750×288
Weight		kg	27.0	27.0	36.0
Colour (Munsell Code)			Beige (5Y 7/2)		
Power supply			230V / 1Ph / 50Hz	230V / 1Ph / 50Hz	230V / 1Ph / 50Hz
Recommended fuse size		A	15	15	15
Starting current		A	5.0	5.0	5.0
Running current		A	2.65/2.84	3.58/4.25	5.00/5.03
Cable section		mm^2	3x1.50	3x1.50	3x1.50
Interconnection between indoor unit and outdoor unit		mm^2	2x0.75	2x0.75	2x0.75
Piping diameter (Liq / Gas)			1/4" - 3/8"	1/4" - 3/8"	1/4" - 3/8"
Minimum piping length		m	5.0	5.0	5.0
Maximum piping length / height difference		m	20 / 10	20 / 10	20 / 10
Current quantity of refrigerant / Chargeless		kg	0.82	0.82	1.00
Chargeless / Additional refrigerant charge		m / g/m	20/-	20/-	20/-
Working range (cooling / heating)		°C	-10℃—43℃/ -15℃—21℃	-10℃—43℃/ -15℃—21℃	-10℃—43℃/ -15℃—21℃
Refrigerant			R410A	R410A	R410A
Condenser Fan			Propeller Fan		
Compressor	Type		ROTARY	ROTARY	ROTARY
	Oil Type		α68HES-H	α68HES-H	α68HES-H
	Oil Charge	ml	320±20	320±20	320±20
	Coil Resistance	Ω	0.75 at 25°C	0.75 at 25°C	0.75 at 25°C
	Quantity		1	1	1

NOTE:

1. *The Sound Pressure Level is based on the following conditions:*

   - *1 meter from the unit front surface and 1 meter from floor level*

   The above data was measured in an anechoic chamber. Please take into consideration reflected sound of your specific site

2.2.11. WALL TYPE (RAK-50PPA/60PPA/70PPA)

INDOOR	Unit	RAK-50PPA	RAK-60PPA	RAK-70PPA
Nominal capacity adjustable		-	-	-
Nominal Cooling capacity (min - max)	kW	5.0(0.9-5.2)	6.10 (0.9-6.5)	7.00 (1.5-8.00)
Cooling sensible capacity	kW	3.5	4.4	5.4
Nominal Heating capacity (min - max)	kW	6.00 (0.9-8.1)	6.80 (0.9-8.5)	8.00 (1.5-9.2)
Noise level cooling (sound pressure) (SL / L / M / H)	dB(A)	24/28/39/47	30/33/42/48	30/33/42/47
Noise level heating (sound pressure) (SL / L / M / H)	dB(A)	27/31/39/47	33/34/42/49	30/33/42/47
Noise level (sound power)	dB(A)	60	63	61
Air flow cooling mode (SL / L / M / H)	m^3/h	246/330/540/750	480/540/690/930	510/630/870/1020
Air flow heating mode (SL / L / M / H)	m^3/h	330/420/570/750	480/510/720/1050	510/630/870/1080
Fan Motor	W	30	30	30
Drain pump pressure lift	cm	-	-	-
Static pressure (SL / L / M / H) (nominal conditions SP 00)	Pa	-	-	-
Dehumidification	l/h	2.8	2.8	4.5
Included drain pump		-	-	-
Max. height available for drain pump (RAD/RAI only)		-	-	-
Dimensions (H x W x D)	mm	300X790X230	295x1030x207	333x1150x245
Panel dimensions (H x W x D)	mm	-	-	-
Weight	kg	10.0	12.0	15.0
Colour (Munsell Code)		Clear White (*ZLL159M)		
Condensate Drain	mm	φ16	φ16	φ16
Panel weight	kg	-	-	-
Panel reference		-	-	-
Color of the panel (RAL)		-	-	-
Running current	A	7.15~6.56/7.60~7.00	8.5~7.8/8.6~7.9	9.95~9.10 / 10.10~9.30
Power supply		35 V DC from outdoor unit	35V DC & 230V , 1Ph , 50Hz from outdoor unit	35V DC & 230V , 1Ph , 50Hz from outdoor unit
Cable section	mm^2	N/A	N/A	N/A
Piping diameter (Liq / Gas)		1/4" / 1/2"	1/4" / 1/2"	1/4" / 5/8"
Drain diameter (ext)	mm	φ16	φ16	φ16
Remote control (standard/optional) *		RAR-5E1/ SPX-RCDB	RAR-5E2/ SPX-RCDB	RAR-5E1/ SPX-RCDB
Filter				
ACL Filter		Wasabi	Wasabi	Wasabi
Dimensions (H x W x D)	mm	48x243x5	48x243x5	48x243x5
Pre-filter (Standard / Optional)		Washable / Stainless	Washable / Stainless	Washable / Stainless

*more information regarding remote control can be found in Chapter 9

NOTE:

1. *The nominal cooling and heating capacity is the combined capacity of the HITACHI standard split system, and are based on the ISO 5151.*

Operation Conditions		*Cooling*	*Heating*
Indoor Air Inlet Temperature	***dB***	*27.0 °C*	*20.0 °C*
	WB	*19.0 °C*	
Outdoor Air Inlet Temperature	***dB***	*35.0 °C*	*7.0 °C*
	WB		*6.0 °C*
***Piping Length**: 5.0 meters; **Piping Lift**: 0 meter* ***dB**: Dry Bulb; **WB**: Wet Bulb*			

2. *The Sound Pressure Level is based on the following conditions:*
   - *0.8 meter beneath indoor height center*
   - *1 meter from Discharge grille*

   The above data was measured in an anechoic chamber. Please take into consideration reflected sound of your specific site

2.2.12. WALL TYPE (RAC-50WPA/60WPA/70WPA)

OUTDOOR		UNIT	RAC-50WPA	RAC-60WPA	RAC-70WPA
Minimum / Maximum indoor units connectable			-	-	-
Minimum / Maximum connected capacity			-	-	-
Nominal Cooling capacity (min - max)		kW	5.0(0.9-5.2)	6.10 (0.9-6.5)	7.00 (1.5-8.00)
Nominal Heating capacity (min - max)		kW	6.00 (0.9-8.1)	6.80 (0.9-8.5)	8.00 (1.5-9.2)
Nominal cooling power input (min - max)		kW	1.56 (0.155-1.900)	1.85 (0.155-2.300)	2.17 (0.200-2.820)
Nominal heating power input (min - max)		kW	1.66(0.155-2.010)	1.88 (0.120-2.550)	2.2 (0.200-2.970)
EER / COP			3.21/3.61	3.30 /3.62	3.23/3.64
SEER / SCOP			6.1/4.3	6.0/4.0	6.8/4.4
Energy class (SEER/SCOP)			A+/A+	A+/A+	A+/A+
Noise level cooling (sound pressure)		dB(A)	50	50	52
Noise level heating (sound pressure)		dB(A)	52	53	54
Noise level (sound power)		dB(A)	65	66	67.0
Air flow (Cooling / Heating)		m^3/h	2160/2160	2160/2160	2820/2820
Static pressure (nominal conditions, maximum)		Pa	-	-	-
Dimensions (H x W x D)		mm	650x850x298	650x850x298	800x850x298
Weight		kg	45.0	45.0	55.0
Colour (Munsell Code)			Beige (5Y 7/2)		
Power supply			220-230V , 1Ph , 50Hz	220-230V , 1Ph , 50Hz	220-230V , 1Ph , 50Hz
Recommended fuse size		A	16	20	30
Starting current		A	10.0	8.5	10.0
Running current		A	7.15-6.56/7.60-7.00	8.50-7.80/8.60-7.90	9.95~9.10 / 10.10~9.30
Cable section		mm^2	Ø2.0	2.500	2.500
Interconnection between indoor unit and outdoor unit		mm^2	Ø1.6 OR Ø2.0	2x2.5 + 2x1.6 or 2.0	2x2.5 + 2x1.6 or 2.0
Piping diameter (Liq / Gas)			1/4" / 1/2"	1/4" / 1/2"	1/4" / 5/8"
Minimum piping length		m	3.0	3.0	3.0
Maximum piping length / height difference		m	20 / 10	30 / 20	30 / 20
Current quantity of refrigerant / Chargeless		kg	1.65	1.65	1.85
Chargeless / Additional refrigerant charge		m / g/m	8/10	30 / chargeless	30 / chargeless
Working range (cooling / heating)		°C	-10 ~ 43 / -15 ~ 21	-10 ~ 43 / -15 ~ 21	-10 ~ 43 / -15 ~ 21
Refrigerant			R410A	R410A	R410A
Condenser Fan			Propeller Fan		
Compressor	Type		2-Cylinder Rotary	2-Cylinder Rotary	2-Cylinder Rotary
	Oil Type		HAF68D1	HAF68D1	HAF68D1
	Oil Charge	ml	480	480	580
	Coil Resistance	Ω	1.767 at 20°C	1.298 at 20°C	1.298 at 20°C
			2.1649 at 75°C	1.767 at 75°C	1.767 at 75°C
	Quantity		1	1	1

NOTE:

1. *The Sound Pressure Level is based on the following conditions:*

   - *1 meter from the unit front surface and 1 meter from floor level*

   The above data was measured in an anechoic chamber. Please take into consideration reflected sound of your specific site

2.2.13. WALL TYPE (RAK-18PEA/25PEA/35PEA/50PEA)

INDOOR	Unit	RAK-18PEA	RAK-25PEA	RAK-35PEA	RAK-50PEA
Nominal capacity adjustable		-	-	-	-
Nominal Cooling capacity (min - max)	kW	2.00 (0.90 - 2.50)	2.50 (0.90 - 3.10)	3.50 (0.90- 4.00)	5.00 (1.90- 5.20)
Cooling sensible capacity	kW	1.9	2.1	3.2	3.4
Nominal Heating capacity (min - max)	kW	2.50 (0.90 - 3.20)	3.40 (0.90- 4.40)	4.20 (0.90- 5.00)	6.00 (2.2- 7.30)
Noise level cooling (sound pressure) (SL / L / M / H)	dB(A)	21/27/33/37	22/24/33/40	25/26/36/43	28/30/40/46
Noise level heating (sound pressure) (SL / L / M / H)	dB(A)	19/28/34/38	20/21/34/41	26/27/36/44	25/30/39/47
Noise level (sound power)	dB(A)	51	54	57	60
Air flow cooling mode (SL / L / M / H)	m^3/h	312/350/ 400/440	333/370/430/510	333/400/485/600	333/450/600/700
Air flow heating mode (SL / L / M / H)	m^3/h	312/350/420/480	333/400/500/570	333/520/550/660	433/510/650/770
Fan Motor	W	25	25	25	25
Drain pump pressure lift	cm	-	-	-	-
Static pressure (SL / L / M / H) (nominal conditions SP 00)	Pa	-	-	-	-
Dehumidification	l/h	1.2	1.4	1.6	2.0
Included drain pump		-	-	-	-
Max. height available for drain pump (RAD/RAI only)		-	-	-	-
Dimensions (H x W x D)	mm	280x780x218	280x780x218	280x780x218	280x780x218
Panel dimensions (H x W x D)	mm	-	-	-	-
Weight	kg	7.5	7.5	7.5	7.5
Colour (Munsell Code)		White			
Condensate Drain	mm	φ16	φ16	φ16	φ16
Panel weight	kg	-	-	-	-
Panel reference		-	-	-	-
Color of the panel (RAL)		-	-	-	-
Running current	A	2.97/3.00	3.58/4.25	5.00/5.03	6.85/7.29
Power supply		35 V DC from outdoor unit	35 V DC from outdoor unit	35 V DC from outdoor unit	35 V DC from outdoor unit
Cable section	mm^2	0.75x2	0.75x2	0.75x2	0.75x2
Piping diameter (Liq / Gas)		1/4" - 3/8"	1/4" - 3/8"	1/4" - 3/8"	1/4" - 1/2"
Drain diameter (ext)	mm	φ16	φ16	φ16	φ16
Remote control (standard/optional) *		RAR-5F1/ SPX-RCDB	RAR-5F1/ SPX-RCDB	RAR-5F1/ SPX-RCDB	RAR-5F1/ SPX-RCDB
Filter					
ACL Filter (optional)		Wasabi	Wasabi	Wasabi	Wasabi
Dimensions (H x W x D)	mm	48x243x5	48x243x5	48x243x5	48x243x5
Pre-filter (Standard / Optional)		Washable / Stainless	Washable / Stainless	Washable / Stainless	Washable / Stainless

more information regarding remote control can be found in Chapter 9

NOTE:

1. *The nominal cooling and heating capacity is the combined capacity of the HITACHI standard split system, and are based on the ISO 5151.*

Operation Conditions		*Cooling*	*Heating*
Indoor Air Inlet Temperature	***dB***	*27.0 °C*	*20.0 °C*
	WB	*19.0 °C*	
Outdoor Air Inlet Temperature	***dB***	*35.0 °C*	*7.0 °C*
	WB		*6.0 °C*
***Piping Length**: 5.0 meters; **Piping Lift**: 0 meter* ***dB**: Dry Bulb; **WB**: Wet Bulb*			

2. *The Sound Pressure Level is based on the following conditions:*

- *1.5 meter beneath the Unit*

The above data was measured in an anechoic chamber. Please take into consideration reflected sound of your specific site

2.2.14. WALL TYPE (RAC-18WEA/25WEA/35WEA/50WEA)

OUTDOOR		UNIT	RAC-18WEA	RAC-25WEA	RAC-35WEA	RAC-50WEA
Minimum / Maximum indoor units connectable			-	-	-	-
Minimum / Maximum connected capacity			-	-	-	-
Nominal Cooling capacity (min - max)		kW	2.00 (0.90 - 2.50)	2.50 (0.90 - 3.10)	3.50 (0.90- 4.00)	5.00 (1.90- 5.20)
Nominal Heating capacity (min - max)		kW	2.50 (0.90 - 3.20)	3.40 (0.90- 4.40)	4.20 (0.90- 5.00)	6.00 (2.2- 7.30)
Nominal cooling power input (min - max)		kW	0.58 (0.25 - 1.01)	0.70 (0.25 - 1.29)	1.090 (0.25 - 1.46)	1.560 (0.50 - 2.10)
Nominal heating power input (min - max)		kW	0.62 (0.25 - 0.97)	0.88 (0.25 - 1.25)	1.100(0.25 - 1.70)	1.660(0.50 - 2.75)
EER / COP			3.45/4.03	3.57/3.86	3.21/3.82	3.21/3.61
SEER / SCOP			5.8/3.8	5.8/3.8	5.9/3.8	5.9/3.8
Energy class (SEER/SCOP)			A+/A	A+/A	A+/A	A+/A
Noise level cooling (sound pressure)		dB(A)	46	48	49	51
Noise level heating (sound pressure)		dB(A)	47	49	50	51
Noise level (sound power)		dB(A)	60	62	63	65
Air flow (Cooling / Heating)		m^3/h	1860 / 1620	1860 / 1620	1920 / 1620	2160 / 2160
Static pressure (nominal conditions, maximum)		Pa	no	no	no	no
Dimensions (H x W x D)		mm	505x700x258	505x700x258	548×750×288	600x792x299
Weight		kg	27.0	27.0	36.0	40.0
Colour (Munsell Code)			Beige (5Y 7/2)			
Power supply			230V / 1Ph / 50Hz	230V / 1Ph / 50Hz	230V / 1Ph / 50Hz	230V / 1Ph / 50Hz
Recommended fuse size		A	15	15	15	25
Starting current		A	2.97/3.00	3.58/4.25	5.00/5.03	6.85/7.29
Running current		A	2.97/3.00	3.58/4.25	5.00/5.03	6.85/7.29
Cable section		mm^2	3x1.50	3x1.50	3x1.50	3x2.50
Interconnection between indoor unit and outdoor unit		mm^2	2x0.75	2x0.75	2x0.75	2x0.75
Piping diameter (Liq / Gas)			1/4" - 3/8"	1/4" - 3/8"	1/4" - 3/8"	1/4" - 1/2"
Minimum piping length		m	5.0	5.0	5.0	5.0
Maximum piping length / height difference		m	20 / 10	20 / 10	20 / 10	20 / 10
Current quantity of refrigerant / Chargeless		kg	0.82	0.82	1.00	1.25
Chargeless / Additional refrigerant charge		m / g/m	20/-	20/-	20/-	20/-
Working range (cooling / heating)		°C	-10~43/-15~21	-10~43/-15~21	-10~43/-15~21	-10~43/-15~21
Refrigerant			R410A	R410A	R410A	R410A
Condenser Fan			Propeller Fan			
Compressor	Type		ROTARY	ROTARY	ROTARY	ROTARY
	Oil Type		α68HES-H	α68HES-H	α68HES-H	HAF68DIU
	Oil Charge	ml	320±20	320±20	320±20	440±20
	Coil Resistance	Ω	0.74 at 25°C	0.74 at 25°C	0.74 at 25°C	0.74 at 25°C
			2.4 at 75°C	2.4 at 75°C	2.4 at 75°C	2.4 at 75°C
	Quantity		1	1	1	1

NOTE:

1. *The Sound Pressure Level is based on the following conditions:*

- *1 meter from the unit front surface and 1 meter from floor level*

The above data was measured in an anechoic chamber. Please take into consideration reflected sound of your specific site

2.2.15. FLOOR TYPE (RAF-25PXA/35PXA/50PXA)

INDOOR	Unit	RAF-25PXA	RAF-35PXA	RAF-50PXA
Nominal capacity adjustable		-	-	-
Nominal Cooling capacity (min - max)	kW	2.5(0.9-3.1)	3.5(0.9-4.0)	5.0 (0.9-5.2)
Cooling sensible capacity	kW	2.50	2.95	3.80
Nominal Heating capacity (min - max)	kW	3.4(0.9-4.4)	4.5(0.9-5.0)	6.5 (0.9-8.1)
Noise level cooling (sound pressure) (SL / L / M / H)	dB(A)	20/26/31/38	20/26/31/39	22/29/36/43
Noise level heating (sound pressure) (SL / L / M / H)	dB(A)	20/26/31/38	20/26/31/39	22/29/36/44
Noise level (sound power)	dB(A)	55	56	59
Air flow cooling mode (SL / L / M / H)	m^3/h	270/390/510/630	270/390/510/630	300/450/540/720
Air flow heating mode (SL / L / M / H)	m^3/h	300/420/540/660	300/420/540/660	330/480/570/750
Fan Motor	W	25	25	25
Drain pump pressure lift	cm	-	-	-
Static pressure (SL / L / M / H) (nominal conditions SP 00)	Pa	-	-	-
Dehumidification	l/h	1.4	1.9	2.8
Included drain pump		no	no	no
Max. height available for drain pump (RAD/RAI only)		no	no	no
Dimensions (H x W x D)	mm	590x750x215	590x750x215	590x750x215
Panel dimensions (H x W x D)	mm	-	-	-
Weight	kg	15.0	15.0	15.0
Colour (Munsell Code)		Pearl White		
Condensate Drain	mm	φ16	φ16	φ16
Panel weight	kg	-	-	-
Panel reference		-	-	-
Color of the panel (RAL)		-	-	-
Running current	A	2.66-2.55/3.63-3.47	4.68-4.48/5.60-5.36	7.16-6.85/8.17-7.82
Power supply		36 V DC from outdoor unit	37 V DC from outdoor unit	38 V DC from outdoor unit
Cable section	mm^2	1.250	1.250	1.250
Piping diameter (Liq / Gas)		1/4" / 3/8"	1/4" / 3/8"	1/4" / 1/2"
Drain diameter (ext)	mm	φ16	φ16	φ16
Remote control (standard/optional) *		RAR-5E4/ SPX-RCDB	RAR-5E4/ SPX-RCDB	RAR-5E4/ SPX-RCDB
Filter				
ACL Filter		Nano Titanium	Nano Titanium	Nano Titanium
Dimensions (H x W x D)	mm	48x243x8	48x243x8	48x243x8
Pre-filter (Standard / Optional)		Nano Stainless/-	Nano Stainless/-	Nano Stainless/-

more information regarding remote control can be found in Chapter 9

NOTE:

1. *The nominal cooling and heating capacity is the combined capacity of the HITACHI standard split system, and are based on the ISO 5151.*

Operation Conditions		*Cooling*	*Heating*
Indoor Air Inlet Temperature	***dB***	*27.0 °C*	*20.0 °C*
	WB	*19.0 °C*	
Outdoor Air Inlet Temperature	***dB***	*35.0 °C*	*7.0 °C*
	WB		*6.0 °C*
***Piping Length**: 5.0 meters; **Piping Lift**: 0 meter* ***dB**: Dry Bulb; **WB**: Wet Bulb*			

2. *The Sound Pressure Level is based on the following conditions:*

- *1.5 meter beneath the Unit*

The above data was measured in an anechoic chamber. Please take into consideration reflected sound of your specific site

2.2.16. FLOOR TYPE (RAC-25FXA/35FXA/50FXA)

OUTDOOR		UNIT	RAC-25FXA	RAC-35FXA	RAC-50FXA
Minimum / Maximum indoor units connectable			-	-	-
Minimum / Maximum connected capacity			-	-	-
Nominal Cooling capacity (min - max)		kW	2.5(0.9-3.1)	3.5(0.9-4.0)	5.0 (0.9-5.2)
Nominal Heating capacity (min - max)		kW	3.4(0.9-4.4)	4.5(0.9-5.0)	6.5 (0.9-8.1)
Nominal cooling power input (min - max)		kW	0.580(155-1,160)	1.020(0.155-1.380)	1.560(0.155-1.950)
Nominal heating power input (min - max)		kW	0.79(0.115-1.170)	1.220(0.115-1.350)	1.780(0.155-2.100)
EER / COP			4.31/4.30	3.43/3.69	3.21/3.65
SEER / SCOP			6.4/4.2	6.4/4.1	6.0/4.2
Energy class (SEER/SCOP)			A++/A+	A++/A+	A+/A+
Noise level cooling (sound pressure)		dB(A)	45	46	50
Noise level heating (sound pressure)		dB(A)	47	48	52
Noise level (sound power)		dB(A)	62	63	65
Air flow (Cooling / Heating)		m^3/h	1860 / 1620	1920 / 1620	1950 /1750
Static pressure (nominal conditions, maximum)		Pa	-	-	-
Dimensions (H x W x D)		mm	590x750x215	590x750x215	600x792x299
Weight		kg	35.0	35.0	42
Colour (Munsell Code)			T-Beige (ZYY95)		
Power supply			230V / 1Ph / 50Hz	230V / 1Ph / 50Hz	230V / 1Ph / 50Hz
Recommended fuse size		A	16	16	16
Starting current		A	-	-	-
Running current		A	2.66-2.55/3.63-3.47	4.68-4.48/5.60-5.36	7.16-6.85/8.17-7.82
Cable section		mm^2	-	-	-
Interconnection between indoor unit and outdoor unit		mm^2	1.6 or 2.0	1.6 or 2.0	1.6 or 2.0
Piping diameter (Liq / Gas)			1/4" / 3/8"	1/4" / 3/8"	1/4" / 1/2"
Minimum piping length		m	5.0	5.0	5
Maximum piping length / height difference		m	20 / 10	20 / 10	30 / 10
Current quantity of refrigerant / Chargeless		kg	0.87	0.87	1.45
Chargeless / Additional refrigerant charge		m / g/m	20/-	20/-	30/-
Working range (cooling / heating)		°C	-10 ~ 43 / -15 ~ 21	-10 ~ 43 / -15 ~ 21	-10 ~ 43 / -15 ~ 21
Refrigerant			R410A	R410A	R410A
Condenser Fan			Propeller Fan		
Compressor	Type		Scroll	Scroll	Scroll
	Oil Type		POE	POE	HAF68D1
	Oil Charge	ml	380	380	420
	Coil Resistance	Ω	1.069 at 20°C	1.069 at 20°C	1.069 at 20°C
			1.3 at 75°C	1.3 at 75°C	1.3 at 75°C
	Quantity		1	1	1

NOTE:

1. *The Sound Pressure Level is based on the following conditions:*

- *1 meter from the unit front surface and 1 meter from floor level*

  The above data was measured in an anechoic chamber. Please take into consideration reflected sound of your specific site

2.2.17. FLOOR TYPE (RAF-25RPA/35RPA/50RPA)

INDOOR	Unit	RAF-25RPA	RAF-35RPA	RAF-50RPA
Nominal capacity adjustable		-	-	-
Nominal Cooling capacity (min - max)	kW	2.50 (0.90 - 3.10)	3.50 (1.10 - 4.20)	5.00 (1.90 - 5.20)
Cooling sensible capacity	kW	2.3	2.9	3.8
Nominal Heating capacity (min - max)	kW	3.40 (0.90 - 4.40)	4.20 (1.10 - 5.20)	6.00 (2.20 - 7.30)
Noise level cooling (sound pressure) (SL / L / M / H)	dB(A)	23/26/32/40	25/29/35/42	25/30/37/46
Noise level heating (sound pressure) (SL / L / M / H)	dB(A)	23/27/33/40	26/30/35/42	25/30/37/47
Noise level (sound power)	dB(A)	54	56	60
Air flow cooling mode (SL / L / M / H)	m^3/h	378/462/540	400/485/600	430/530/650
Air flow heating mode (SL / L / M / H)	m^3/h	408/498/600	440/525/600	470/570/720
Fan Motor	W	25	25	25
Drain pump pressure lift	cm	-	-	-
Static pressure (SL / L / M / H) (nominal conditions SP 00)	Pa	-	-	-
Dehumidification	l/h	1.4	1.6	2.0
Included drain pump		-	-	-
Max. height available for drain pump (RAD/RAI only)		-	-	-
Dimensions (H x W x D)	mm	600x760x235	600x760x235	600x760x235
Panel dimensions (H x W x D)	mm	-	-	-
Weight	kg	14.0	14.0	14.0
Colour (Munsell Code)		Pure White (*ZYYF1)		
Condensate Drain	mm	-	-	-
Panel weight	kg	-	-	-
Panel reference		-	-	-
Color of the panel (RAL)		-	-	-
Running current	A	3.43/4.11	4.30/4.81	6.63/7.29
Power supply		35 V DC from outdoor unit	35 V DC from outdoor unit	35 V DC from outdoor unit
Cable section	mm^2	0.75x2	0.75x2	0.75x2
Piping diameter (Liq / Gas)		1/4" - 3/8"	1/4" - 3/8"	1/4" - 1/2"
Drain diameter (ext)	mm	φ16	φ16	φ16
Remote control (standard/optional) *		RAR-5E2/ SPX-RCDB	RAR-5E2/ SPX-RCDB	RAR-5E2/ SPX-RCDB
Filter				
ACL Filter		Nano Titanium	Nano Titanium	Nano Titanium
Dimensions (H x W x D)	mm	243x48x8	243x48x8	243x48x8
Pre-filter (Standard / Optional)		Stainless/-	Stainless/-	Stainless/-

NOTE:

1. *The nominal cooling and heating capacity is the combined capacity of the HITACHI standard split system, and are based on the ISO 5151.*

Operation Conditions		*Cooling*	*Heating*
Indoor Air Inlet Temperature	***dB***	*27.0 °C*	*20.0 °C*
	WB	*19.0 °C*	
Outdoor Air Inlet Temperature	***dB***	*35.0 °C*	*7.0 °C*
	WB		*6.0 °C*
***Piping Length**: 5.0 meters; **Piping Lift**: 0 meter* ***dB**: Dry Bulb; **WB**: Wet Bulb*			

2. *The Sound Pressure Level is based on the following conditions:*

- *1.5 meter beneath the Unit*

The above data was measured in an anechoic chamber. Please take into consideration reflected sound of your specific site

2.2.18. FLOOR TYPE (RAC-25FPA/35FPA/50FPA)

OUTDOOR		UNIT	RAC-25FPA	RAC-35FPA	RAC-50FPA
Minimum / Maximum indoor units connectable			-	-	-
Minimum / Maximum connected capacity			-	-	-
Nominal Cooling capacity (min - max)		kW	2.50 (0.90 - 3.10)	3.50 (1.10 - 4.20)	5.00 (1.90 - 5.20)
Nominal Heating capacity (min - max)		kW	3.40 (0.90 - 4.40)	4.20 (1.10 - 5.20)	6.00 (2.20 - 7.30)
Nominal cooling power input (min - max)		kW	0.67 (0.25 - 1.29)	0.94 (0.25 - 1.40)	1.51 (0.50 - 2.10)
Nominal heating power input (min - max)		kW	0.85 (0.25 - 1.25)	1.05 (0.25 - 1.80)	1.66 (0.50 - 2.70)
EER / COP			3.73/4.00	3.72 / 4.00	3.31 / 3.61
SEER / SCOP			5.8/4.3	6.0/4.3	5.9/4.0
Energy class (SEER/SCOP)			A+/A+	A+/A+	A+/A+
Noise level cooling (sound pressure)		dB(A)	47	48	51
Noise level heating (sound pressure)		dB(A)	49	49	52
Noise level (sound power)		dB(A)	61	62	65
Air flow (Cooling / Heating)		m^3/h	1860 / 1620	1920 / 1620	2160 / 2160
Static pressure (nominal conditions, maximum)		Pa	-	-	-
Dimensions (H x W x D)		mm	548x750x288	548x750x288	600x792x299
Weight		kg	31.0	35.0	40.0
Colour (Munsell Code)			T-Beige (ZYY95)		
Power supply			230V / 1Ph / 50Hz	230V / 1Ph / 50Hz	230V / 1Ph / 50Hz
Recommended fuse size		A	15	15	25
Starting current		A	3.43/4.11	4.30/4.81	6.63/7.29
Running current		A	3.43/4.11	4.30/4.81	6.63/7.29
Cable section		mm^2	3x1.50	3x1.50	3x2.50
Interconnection between indoor unit and outdoor unit		mm^2	2x0.75	2x0.75	2x0.75
Piping diameter (Liq / Gas)			1/4” - 3/8”	1/4” - 3/8”	1/4” - 1/2”
Minimum piping length		m	5.0	5.0	5.0
Maximum piping length / height difference		m	20 / 10	20 / 10	20 / 10
Current quantity of refrigerant / Chargeless		kg	0.87	1.05	1.25
Chargeless / Additional refrigerant charge		m / g/m	20/-	20/-	20/-
Working range (cooling / heating)		°C	-10~43/-15~21	-10~43/-15~21	-10~43/-15~21
Refrigerant			R410A	R410A	R410A
Condenser Fan			Propeller Fan		
Compressor	Type		ROTARY	ROTARY	ROTARY
	Oil Type		FV50S	FV50S	HAF68DIU
	Oil Charge	ml	320	320	440±20
	Coil Resistance	Ω	0.875 at 25°C	0.875 at 25°C	1.65 at 25°C
			1.043 at 75°C	1.043 at 75°C	
	Quantity		1	1	1

NOTE:

1. *The Sound Pressure Level is based on the following conditions:*

- *1 meter from the unit front surface and 1 meter from floor level*

The above data was measured in an anechoic chamber. Please take into consideration reflected sound of your specific site

2.2.19. DUCT TYPE (RAD-50PPA/60PPA/70PPA)

INDOOR	Unit	RAD-50PPA	RAD-60PPA	RAD-70PPA
Nominal capacity adjustable		-	-	-
Nominal Cooling capacity (min - max)	kW	5.0 (0.9-6.0)	6.0 (0.9-7.0)	7.1 (0.9-8.0)
Cooling sensible capacity	kW	4.0	4.5	5.1
Nominal Heating capacity (min - max)	kW	6.0 (0.9-7.0)	7.3 (0.9-8.0)	8.0 (0.9-9.0)
Noise level cooling (sound pressure) (SL / L / M / H)	dB(A)	28/30/32/34	28/30/32/34	28/30/32/35
Noise level heating (sound pressure) (SL / L / M / H)	dB(A)	29/31/33/35	29/31/33/35	29/31/33/36
Noise level (sound power)	dB(A)	60	60	61
Air flow cooling mode (SL / L / M / H)	m^3/h	618/660/780/900	618/660/780/900	618/660/780/960
Air flow heating mode (SL / L / M / H)	m^3/h	618/660/780/900	618/660/780/900	618/660/780/960
Fan Motor	W	56	56	56
Drain pump pressure lift	cm	-	-	-
Static pressure (SL / L / M / H) (nominal conditions SP 00)	Pa	-/30/50/80	-/30/50/80	-/30/50/80
Dehumidification	l/h	2.8	2.8	5.2
Included drain pump		yes	yes	yes
Max. height available for drain pump (RAD/RAI only)		500	500	500
Dimensions (H x W x D)	mm	270x900x720	270x900x720	270x900x720
Panel dimensions (H x W x D)	mm	-	-	-
Weight	kg	35.0	35.0	35.0
Colour (Munsell Code)		-	-	-
Condensate Drain	mm	φ16	φ16	φ16
Panel weight	kg	-	-	-
Panel reference		-	-	-
Color of the panel (RAL)		-	-	-
Running current	A	6.4~5.9/7.3~6.7	8.55~7.90/9.75~9.0	11.6~10.7 / 10.7~9.8
Power supply		35V DC & 230V , 1Ph , 50Hz from outdoor unit	35V DC & 230V , 1Ph , 50Hz from outdoor unit	35V DC & 230V , 1Ph , 50Hz from outdoor unit
Cable section	mm^2	N/A	N/A	N/A
Piping diameter (Liq / Gas)		1/4" / 1/2"	1/4" / 1/2"	1/4" / 5/8"
Drain diameter (ext)	mm	φ16	φ16	φ16
Remote control (optional only) *		SPX-RCDA/SPX-RCKA	SPX-RCDA/SPX-RCKA	SPX-RCDA/SPX-RCKA
Filter				
ACL Filter		-	-	-
Dimensions (H x W x D)	mm	-	-	-
Pre-filter (Standard / Optional)		Washable/-	Washable/-	Washable/-

more information regarding remote control can be found in Chapter 9

NOTE:

1. *The nominal cooling and heating capacity is the combined capacity of the HITACHI standard split system, and are based on the ISO 5151.*

Operation Conditions		*Cooling*	*Heating*
Indoor Air Inlet Temperature	***dB***	*27.0 °C*	*20.0 °C*
	WB	*19.0 °C*	
Outdoor Air Inlet Temperature	***dB***	*35.0 °C*	*7.0 °C*
	WB		*6.0 °C*
***Piping Length**: 5.0 meters; **Piping Lift**: 0 meter* ***dB**: Dry Bulb; **WB**: Wet Bulb*			

2. *The Sound Pressure Level is based on the following conditions:*

- *1.5 meter beneath the Unit*

The above data was measured in an anechoic chamber. Please take into consideration reflected sound of your specific site

2.2.20. DUCT TYPE (RAC-50DPA/60DPA/70DPA)

OUTDOOR		UNIT	RAC-50DPA	RAC-60DPA	RAC-70DPA
Minimum / Maximum indoor units connectable			-	-	-
Minimum / Maximum connected capacity			-	-	-
Nominal Cooling capacity (min - max)		kW	5.0 (0.9-6.0)	6.0 (0.9-7.0)	7.1 (0.9-8.0)
Nominal Heating capacity (min - max)		kW	6.0 (0.9-7.0)	7.3 (0.9-8.0)	8.0 (0.9-9.0)
Nominal cooling power input (min - max)		kW	1.4 (0.200-2.500)	1.87 (0.200-2.500)	2.53 (0.200-2.920)
Nominal heating power input (min - max)		kW	1.59 (0.200-2.200)	2.13 (0.200-2.600)	2.34 (0.200-3.100)
EER / COP			3.57/3.77	3.21/3.43	2.81/3.42
SEER / SCOP			5.4/3.8	5.1/3.8	5.1/3.8
Energy class (SEER/SCOP)			A/A	A/A	A/A
Noise level cooling (sound pressure)		dB(A)	47	48	53
Noise level heating (sound pressure)		dB(A)	50	51	55
Noise level (sound power)		dB(A)	65	65	67
Air flow (Cooling / Heating)		m^3/h	-/-	-/-	-/-
Static pressure (nominal conditions, maximum)		Pa	-	-	-
Dimensions (H x W x D)		mm	800x850x298	800x850x298	800x850x298
Weight		kg	51.5	55.0	55.0
Colour (Munsell Code)			Beige (5Y 7/2)		
Power supply			220-230V , 1Ph , 50Hz	220-230V , 1Ph , 50Hz	220-240V , 1Ph , 50Hz
Recommended fuse size		A	30	30	30
Starting current		A	10.0	10.0	10.0
Running current		A	6.40-5.90/7.30-6.70	8.55-7.90/9.75-9.00	11.60-10.70/10.70-9.80
Cable section		mm^2	2.000	2.000	2.000
Interconnection between indoor unit and outdoor unit		mm^2	2x2.5 + 2x1.6 or 2.0	2x2.5 + 2x1.6 or 2.0	2x2.5 + 2x1.6 or 2.0
Piping diameter (Liq / Gas)			1/4" / 1/2"	1/4" / 1/2"	1/4" / 5/8"
Minimum piping length		m	5.0	5.0	5.0
Maximum piping length / height difference		m	30 / 20	30 / 20	30 / 20
Current quantity of refrigerant / Chargeless		kg	1.80	1.80	1.80
Chargeless / Additional refrigerant charge		m / g/m	30/-	30/-	30/-
Working range (cooling / heating)		°C	-10 ~ 43 / -15 ~ 21	-10 ~ 43 / -15 ~ 21	-10 ~ 43 / -15 ~ 21
Refrigerant			R410A	R410A	R410A
Condenser Fan			Propeller Fan		
Compressor	Type		2 Cylinder Rotary	2 Cylinder Rotary	2 Cylinder Rotary
	Oil Type		HAF68D1	HAF68D1	HAF68D1
	Oil Charge	ml	480	480	580
	Coil Resistance	ˈΩ	1.05 at 20°C	1.05 at 20°C	1.05 at 20°C
			1.268 at 75°C	1.268 at 75°C	1.268 at 75°C
	Quantity		1	1	1

NOTE:

1. *The Sound Pressure Level is based on the following conditions:*
   - *1.5 meter from the unit front surface and 1.5 meter from floor level*

   The above data was measured in an anechoic chamber. Please take into consideration reflected sound of your specific site

3 -DIMENSIONAL DATA

CONTENTS

3 DIMENSIONAL DATA 3-1

3.1. MONOZONE / MULTIZONE Indoor Units 3-2

3.1.1. WALL TYPE: RAK-18QXA/25QXA/35QXA/50QXA 3-2
3.1.2. WALL TYPE: RAK-18QPA/25QPA/35QPA/50QPA 3-3
3.1.3. FLOOR TYPE: RAF-25QXA/35QXA/50QXA 3-4
3.1.4. FLOOR TYPE: RAF-25RPA/35RPA/50RPA 3-5
3.1.5. CEILING CASSETTE TYPE: RAI-25RPA/35RPA/50RPA/ECPP 3-6
3.1.6. DUCT TYPE: RAD-18RPA/25RPA/35RPA/50RPA 3-7

3.2. MONOZONE / MULTIZONE Outdoor Units 3-8

3.2.1. MONOZONE: RAC-25NPA/35NPA 3-8
3.2.2. MONOZONE: RAC-50NPA 3-9
3.2.3. 2 ROOMS MULTIZONE: RAM-36NP2A 3-10
3.2.4. 2 ROOMS MULTIZONE: RAM-53NP2A 3-11
3.2.5. 3 ROOMS MULTIZONE: RAM-53NP3A 3-12
3.2.6. 3 ROOMS MULTIZONE: RAM-68NP3A 3-13
3.2.7. 4 ROOMS MULTIZONE: RAM-70NP4A 3-14
3.2.8. 5 ROOMS MULTIZONE: RAM-90NP5A 3-15
3.2.9. 6 ROOMS MULTIZONE: RAM-130NP6A 3-16

3.3. MONO SPLIT 3-17

3.3.1. WALL TYPE: RAK-18PSA/25PSA/35PSA/18PSAN/25PSAN/35PSAN 3-17
3.3.2. WALL TYPE: RAC-18WSA/25WSA/35WSA/18WSAN/25WSAN/35WSAN 3-18
3.3.3. WALL TYPE: RAK-18PSPA/25PSPA/35PSPA 3-19
3.3.4. WALL TYPE: RAC-18WSPA/25WSPA/35WSPA 3-20
3.3.5. WALL TYPE: RAK-25PXA/35PXA/50PXA 3-21
3.3.6. WALL TYPE: RAC-25WXA/35WXA 3-22
3.3.7. WALL TYPE: RAC-50WXA 3-23
3.3.8. WALL TYPE: RAK-18PPA/25PPA/35PPA 3-24
3.3.9. WALL TYPE: RAC-18WPA/25WPA 3-25
3.3.10. WALL TYPE: RAC-35WPA 3-26
3.3.11. WALL TYPE: RAK-50PPA 3-27
3.3.12. WALL TYPE: RAC-50WPA 3-28
3.3.13. WALL TYPE: RAK-60PPA 3-29
3.3.14. WALL TYPE: RAC-60WPA 3-30
3.3.15. WALL TYPE: RAK-70PPA 3-31
3.3.16. WALL TYPE: RAC-70WPA 3-32
3.3.17. WALL TYPE: RAK-18PEA/25PEA/35PEA/50PEA 3-33
3.3.18. WALL TYPE: RAC-18WEA/25WEA 3-34
3.3.19. WALL TYPE: RAC-35WEA 3-35
3.3.20. WALL TYPE: RAC-50WEA 3-36
3.3.21. FLOOR TYPE: RAF-25PXA/35PXA/50PXA 3-37
3.3.22. FLOOR TYPE: RAC-25FXA/35FXA 3-38
3.3.23. FLOOR TYPE: RAC-50FXA 3-39
3.3.24. FLOOR TYPE: RAF-25RPA/35RPA/50RPA 3-40
3.3.25. FLOOR TYPE: RAC-25FPA/35FPA 3-41
3.3.26. FLOOR TYPE: RAC-50FPA 3-42
3.3.27. DUCT TYPE: RAD-50PPA/60PPA/70PPA 3-43
3.3.28. DUCT TYPE: RAC-50DPA/60DPA/70DPA 3-44

3.1. MONOZONE / MULTIZONE INDOOR UNITS

3.1.1. WALL TYPE: RAK-18QXA/25QXA/35QXA/50QXA

Unit: mm

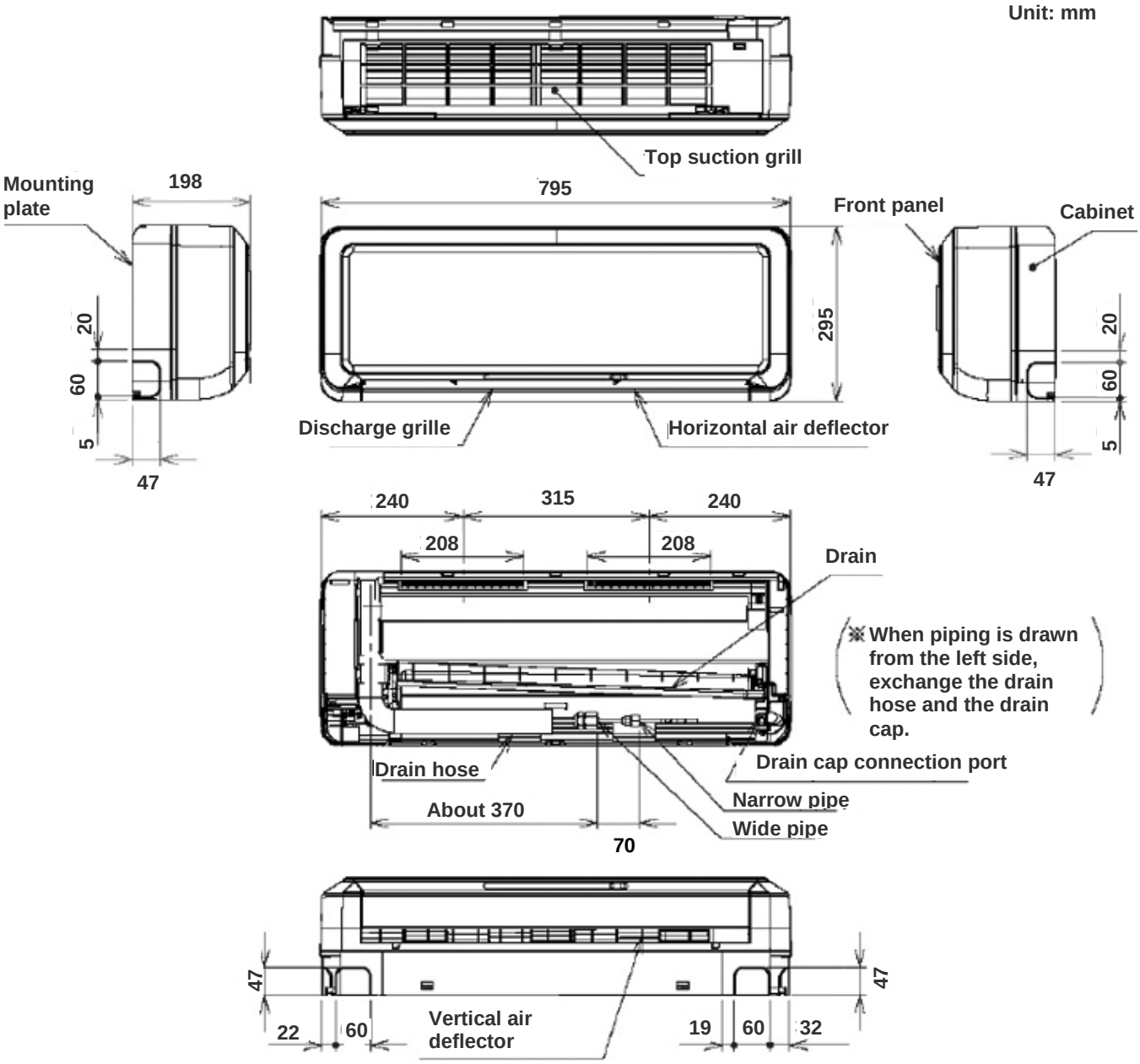

3.1.2. WALL TYPE: RAK-18QPA/25QPA/35QPA/50QPA

Unit: mm

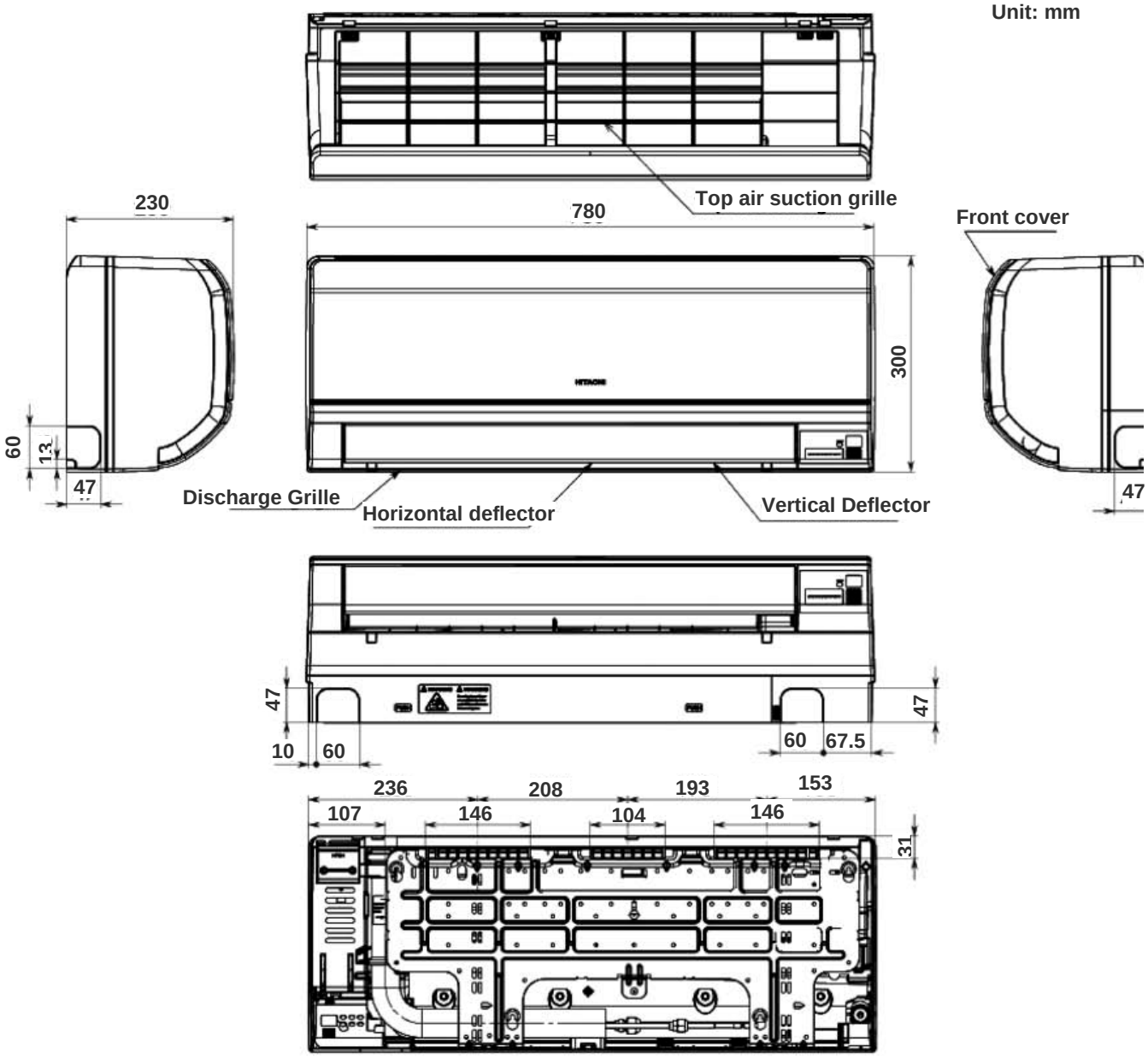

3.1.3. FLOOR TYPE: RAF-25QXA/35QXA/50QXA

Unit: mm

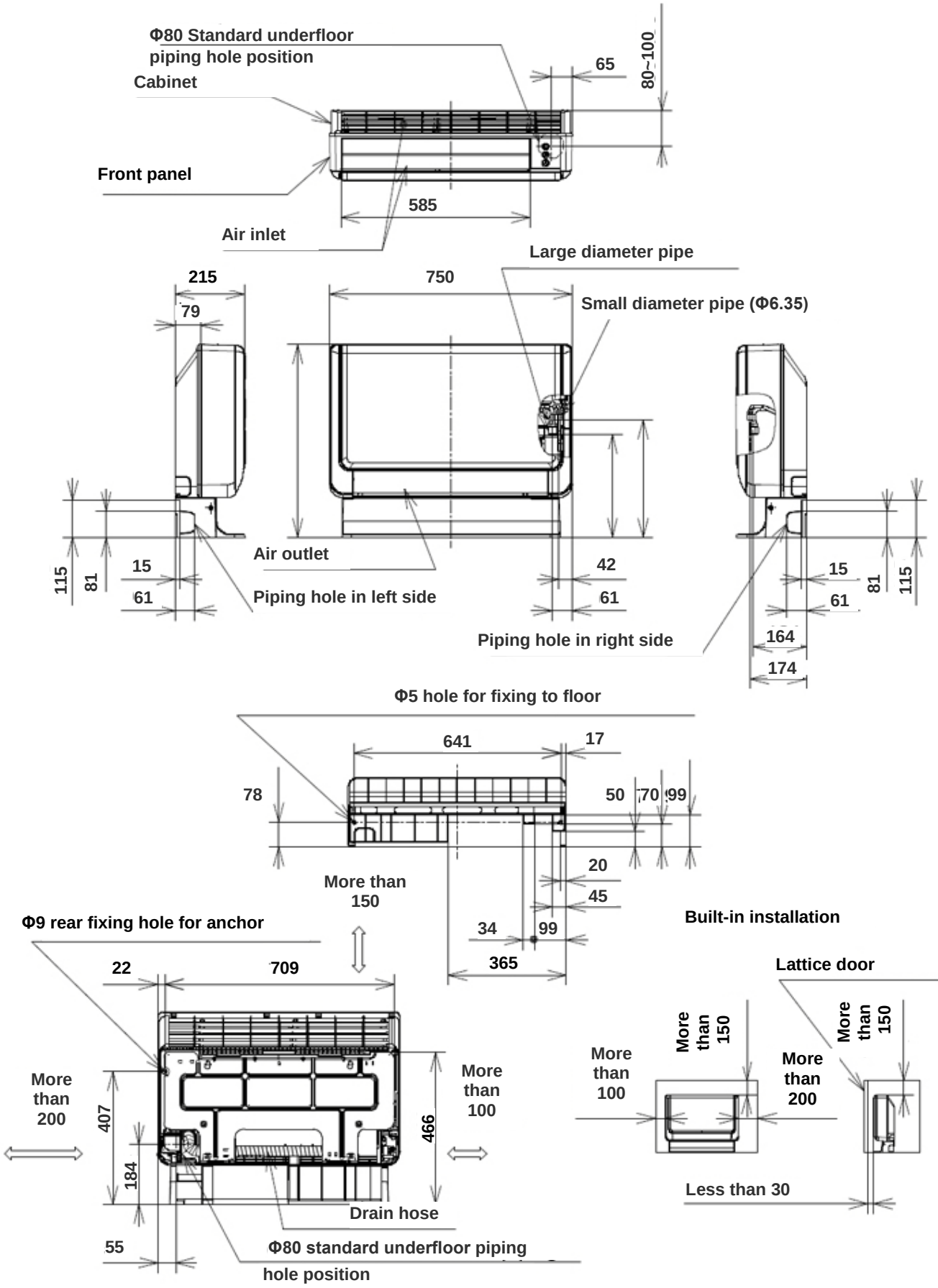

3.1.4. FLOOR TYPE: RAF-25RPA/35RPA/50RPA

Unit: mm

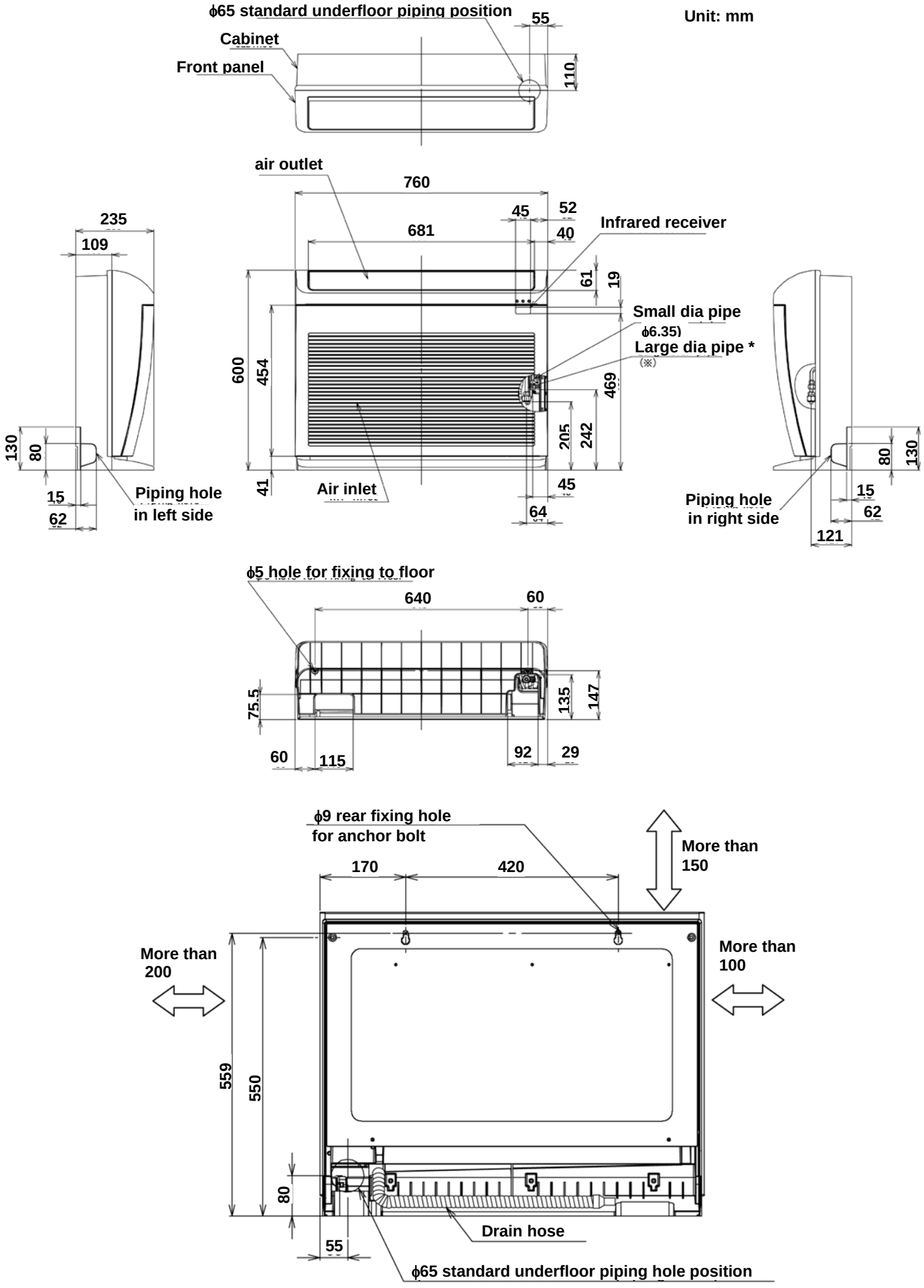

3.1.5. CEILING CASSETTE TYPE: RAI-25RPA/35RPA/50RPA/ECPP

Unit: mm

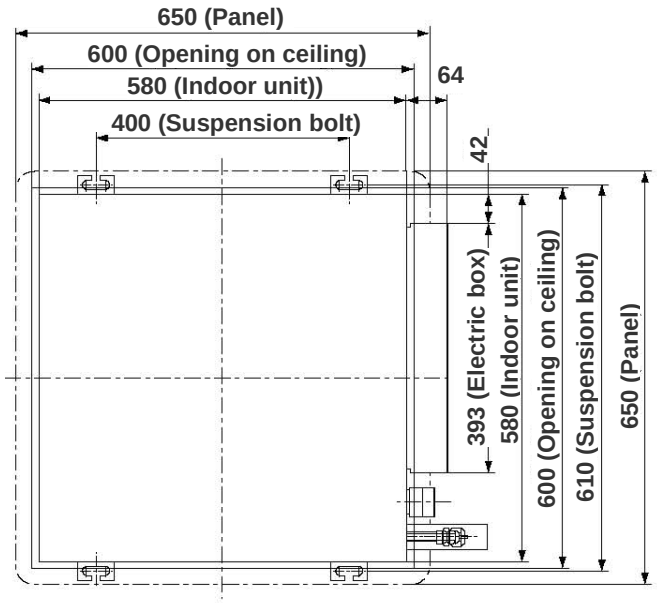

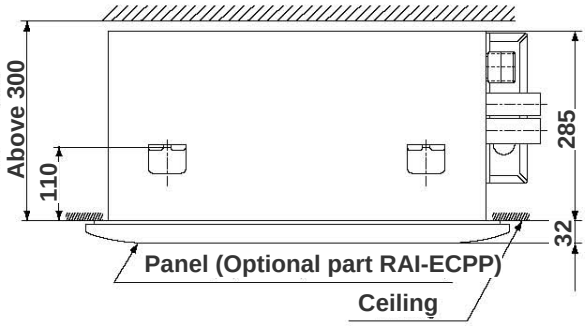

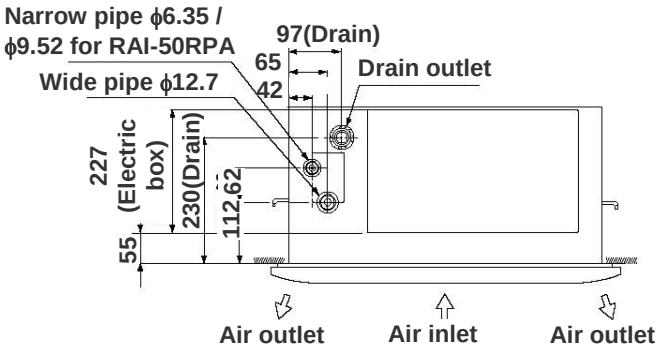

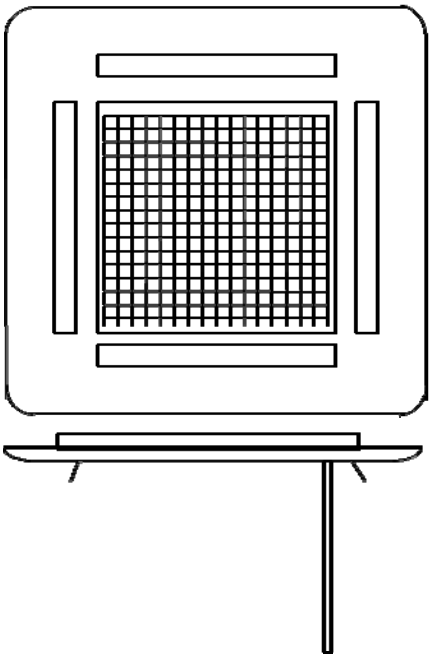

3.1.6. DUCT TYPE: RAD-18RPA/25RPA/35RPA/50RPA

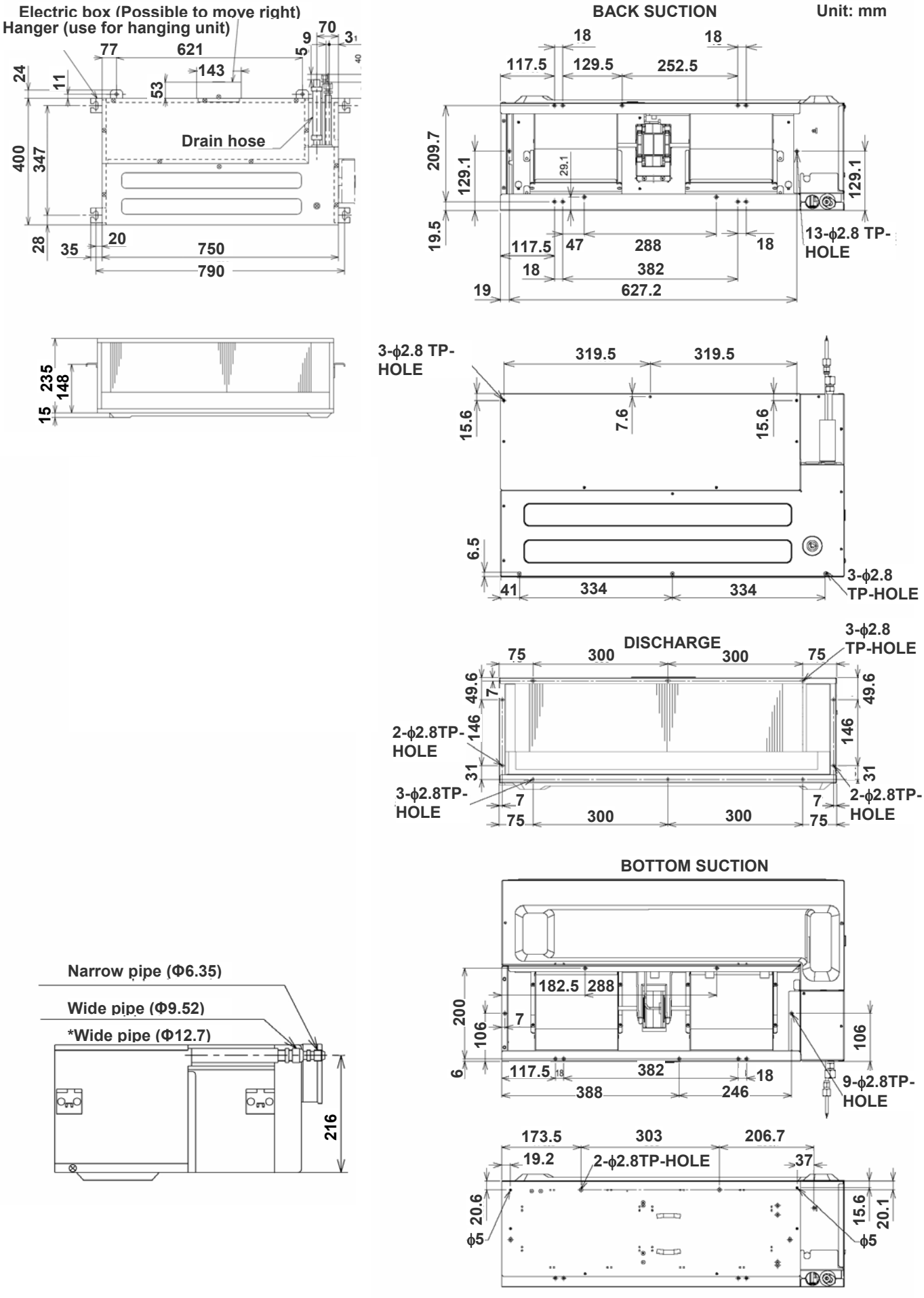

3.2. MONOZONE / MULTIZONE OUTDOOR UNITS

3.2.1. MONOZONE: RAC-25NPA/35NPA

Unit: mm

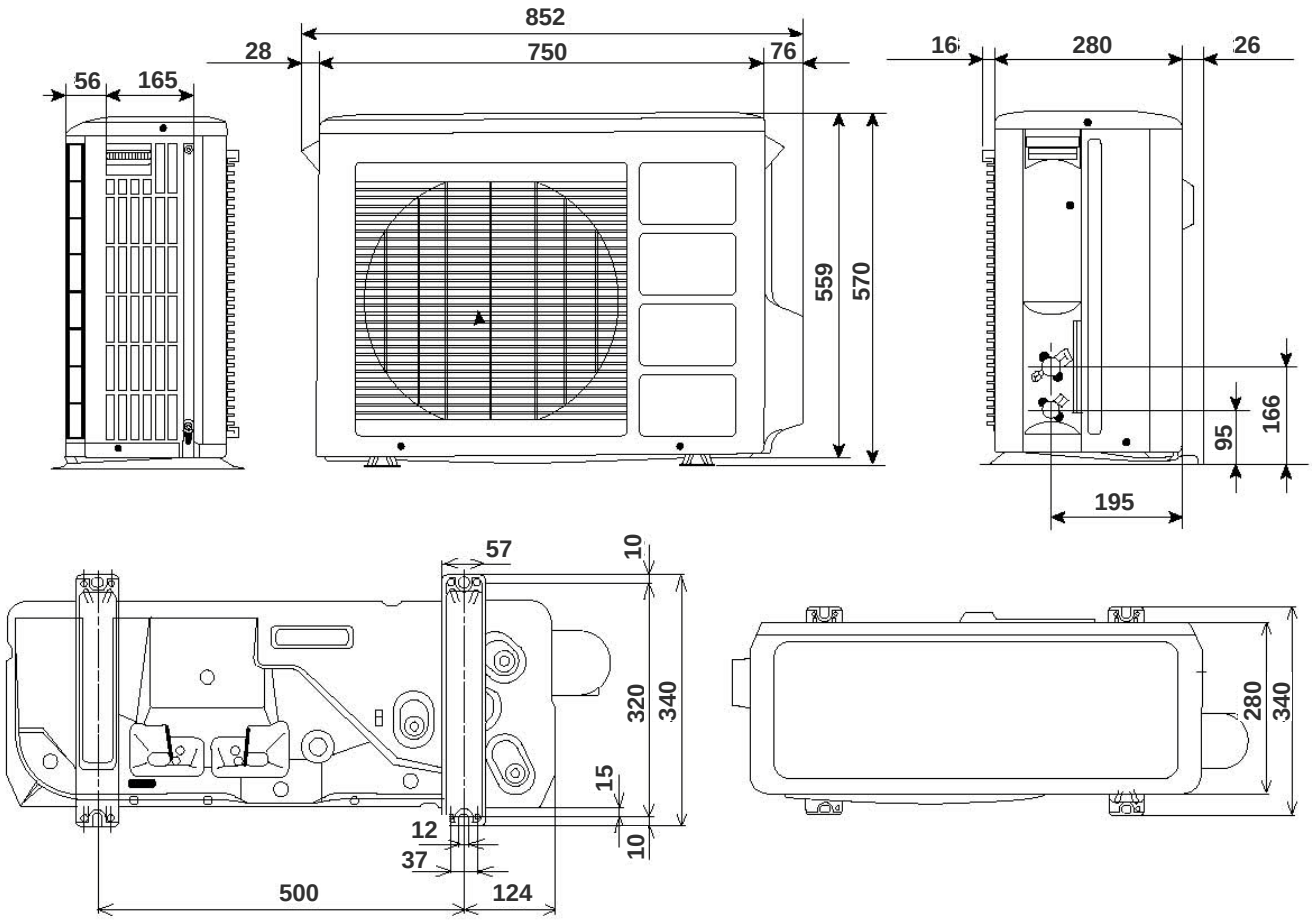

3.2.2. MONOZONE: RAC-50NPA

Unit: mm

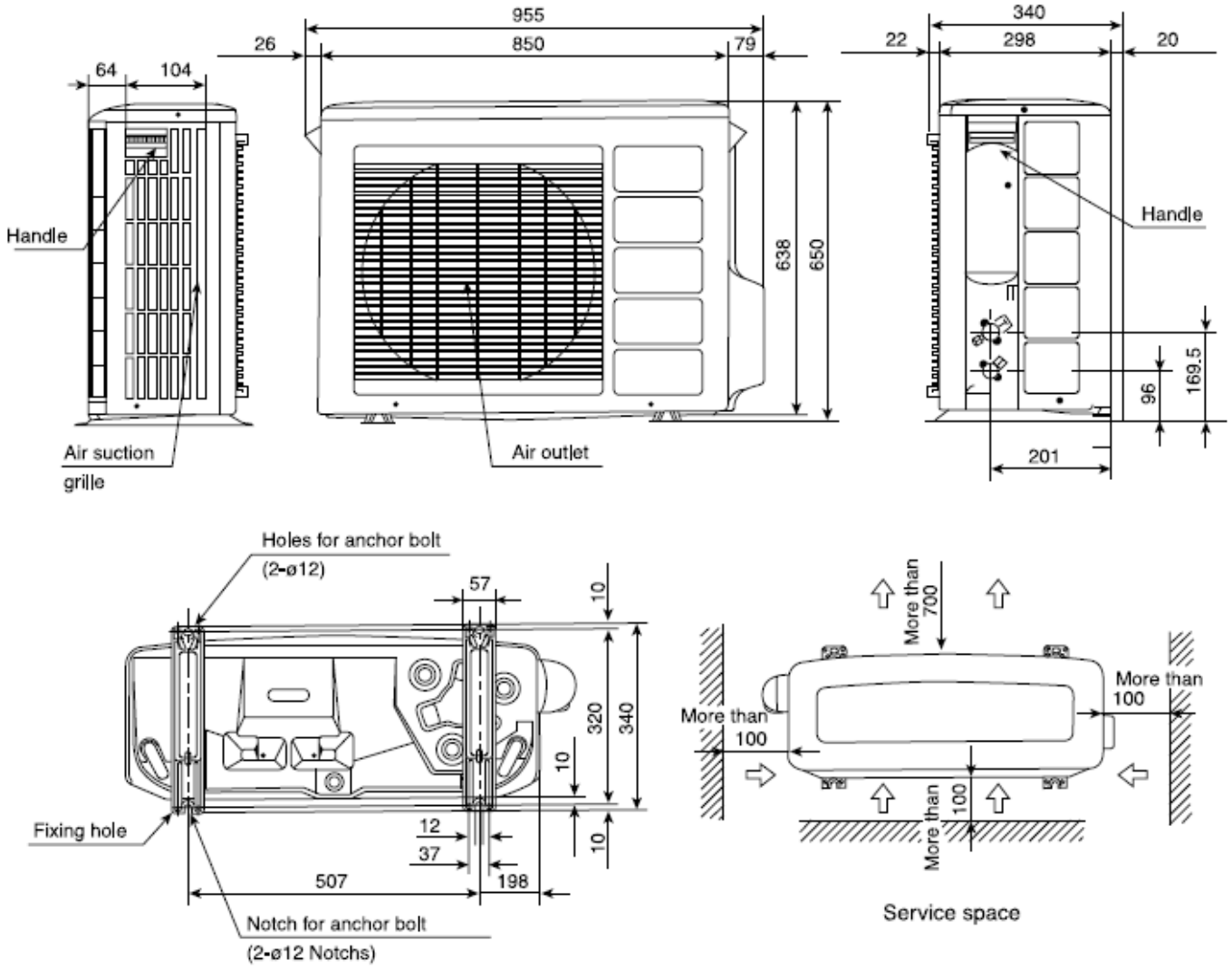

3.2.3. 2 ROOMS MULTIZONE: RAM-36NP2A

Unit: mm

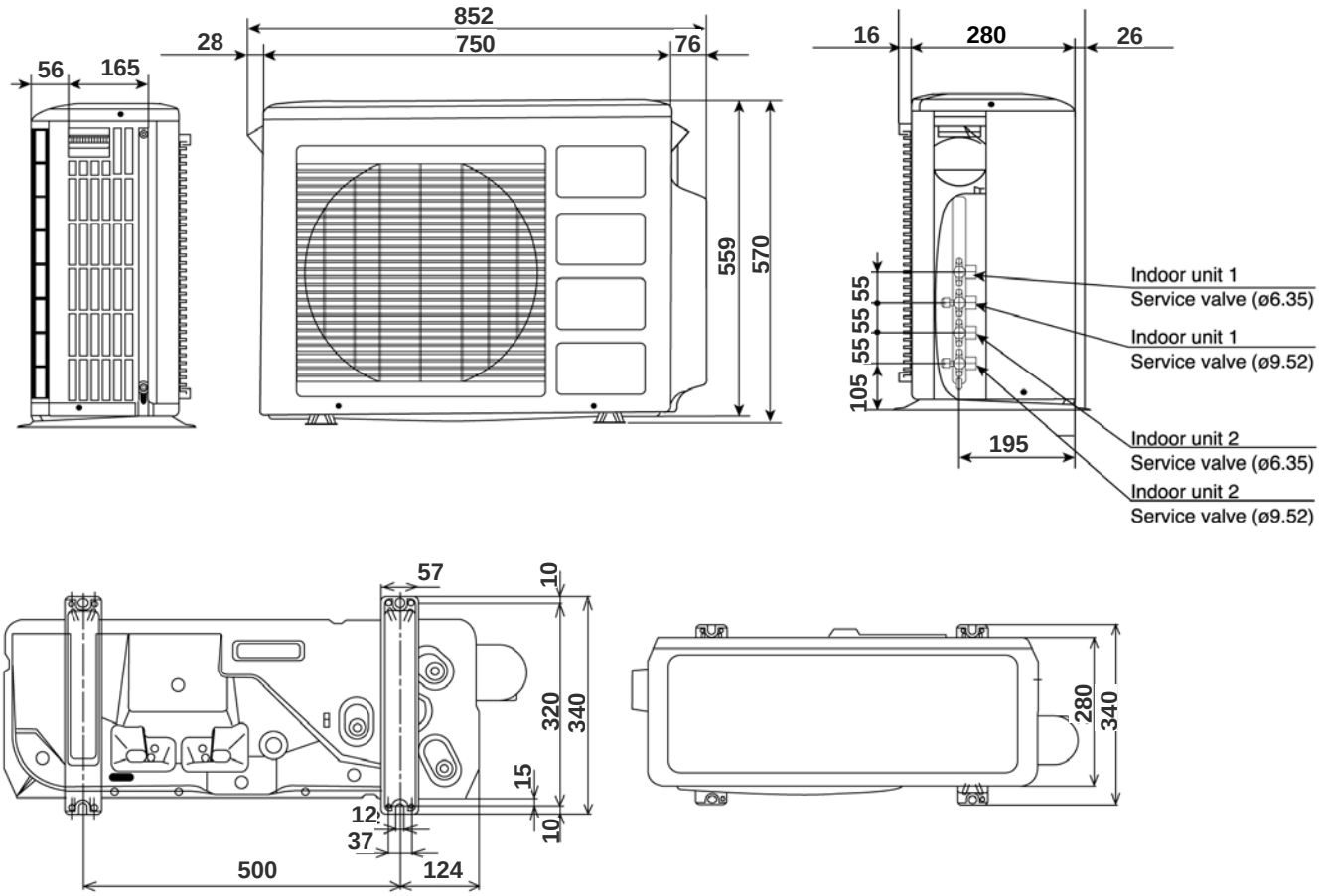

3.2.4. 2 ROOMS MULTIZONE: RAM-53NP2A

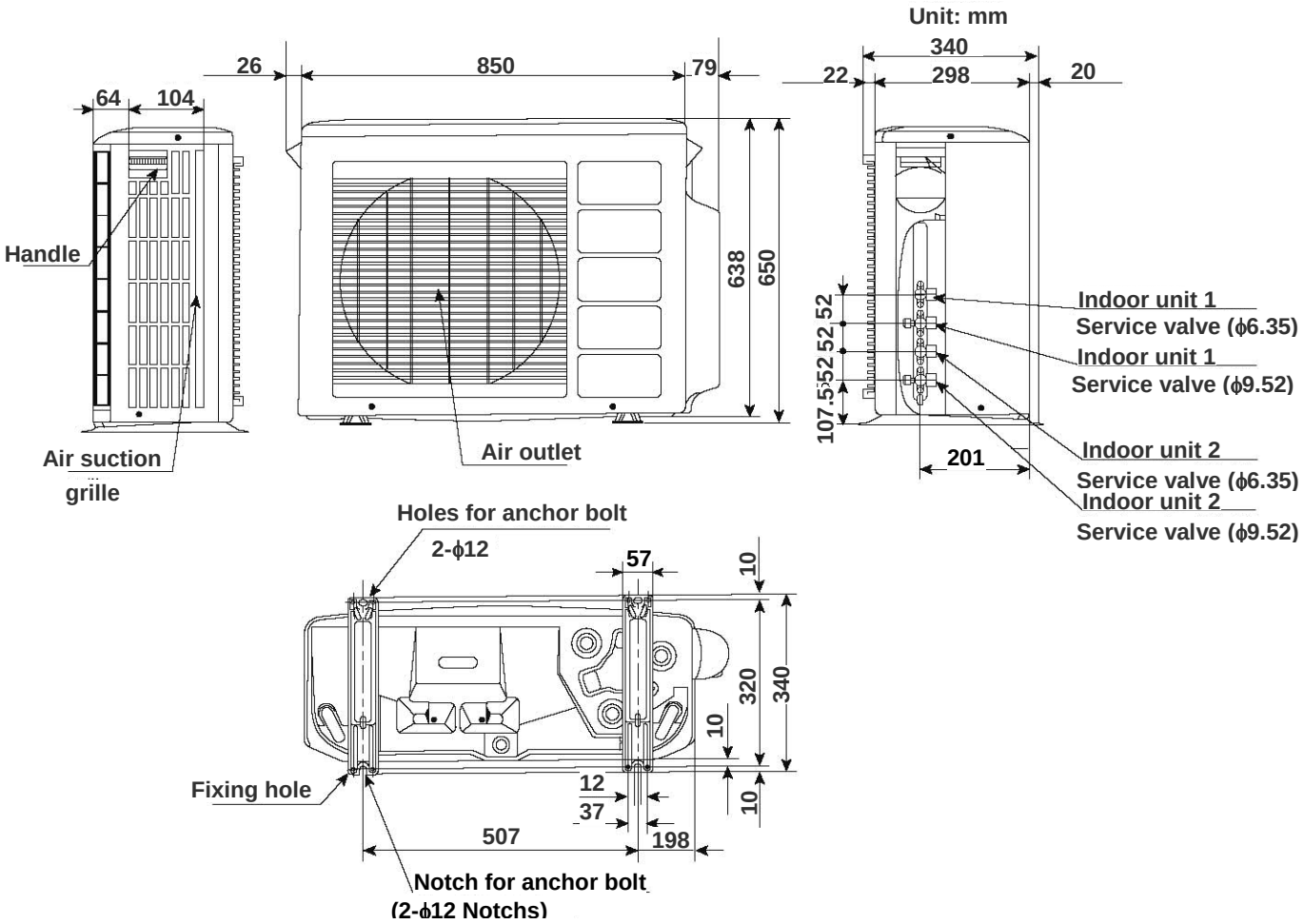

3.2.5. 3 ROOMS MULTIZONE: RAM-53NP3A

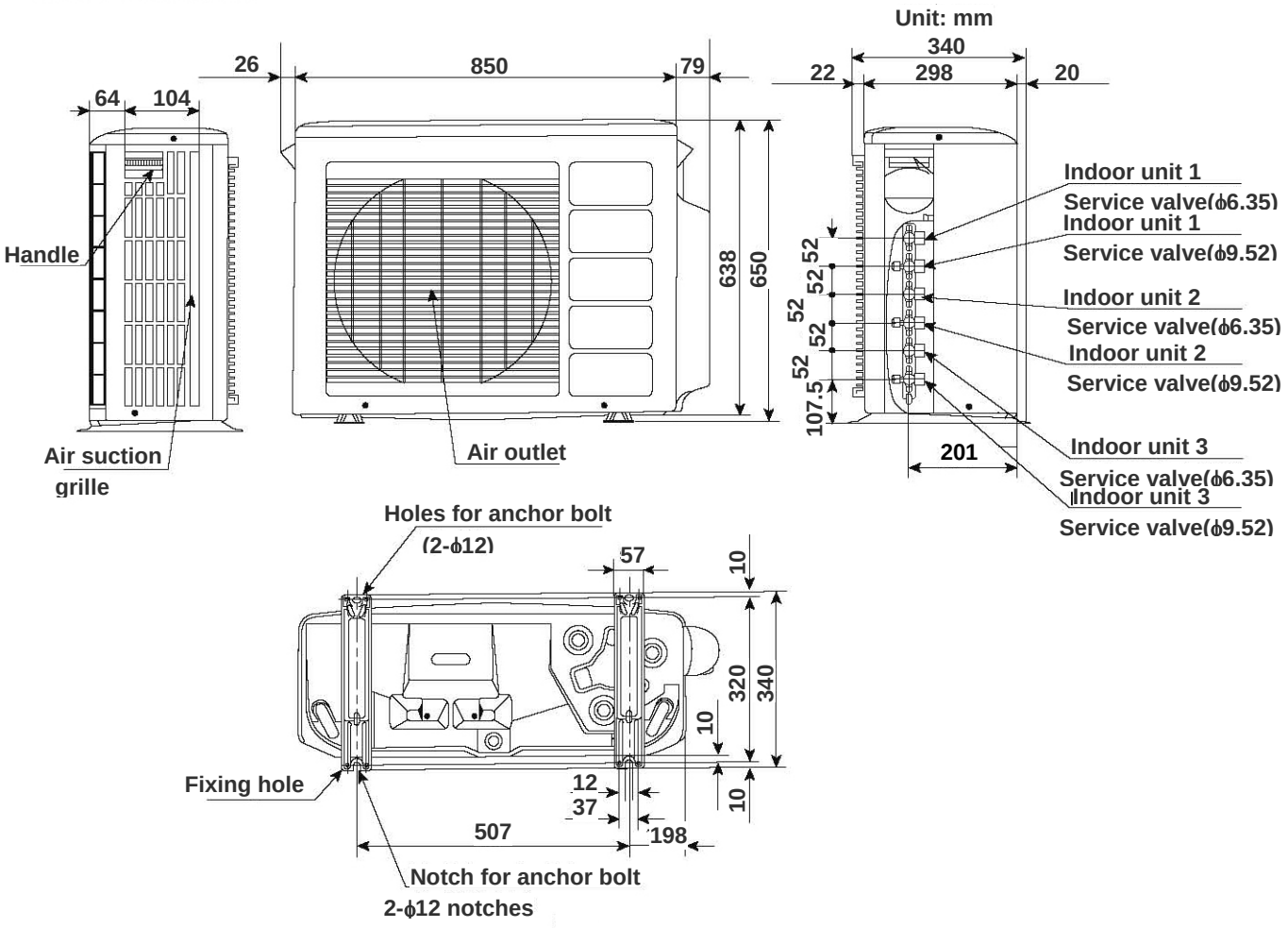

3.2.6. 3 ROOMS MULTIZONE: RAM-68NP3A

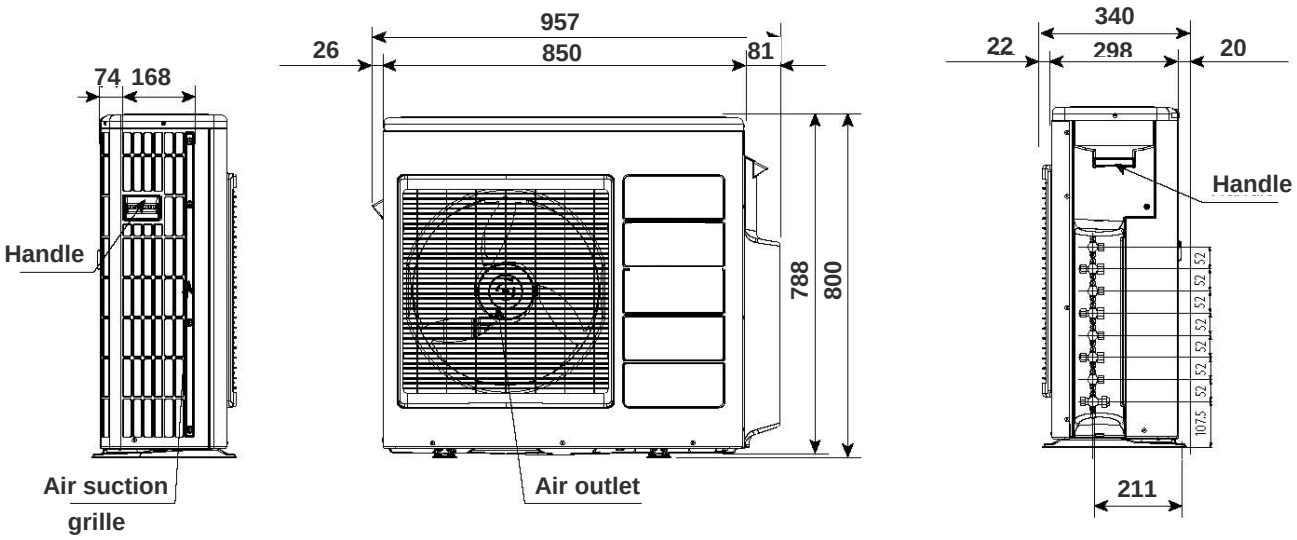

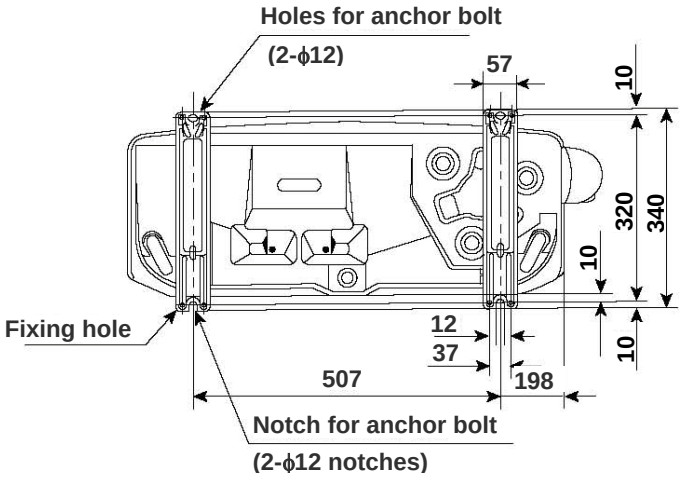

3.2.7. 4 ROOMS MULTIZONE: RAM-70NP4A

Unit: mm

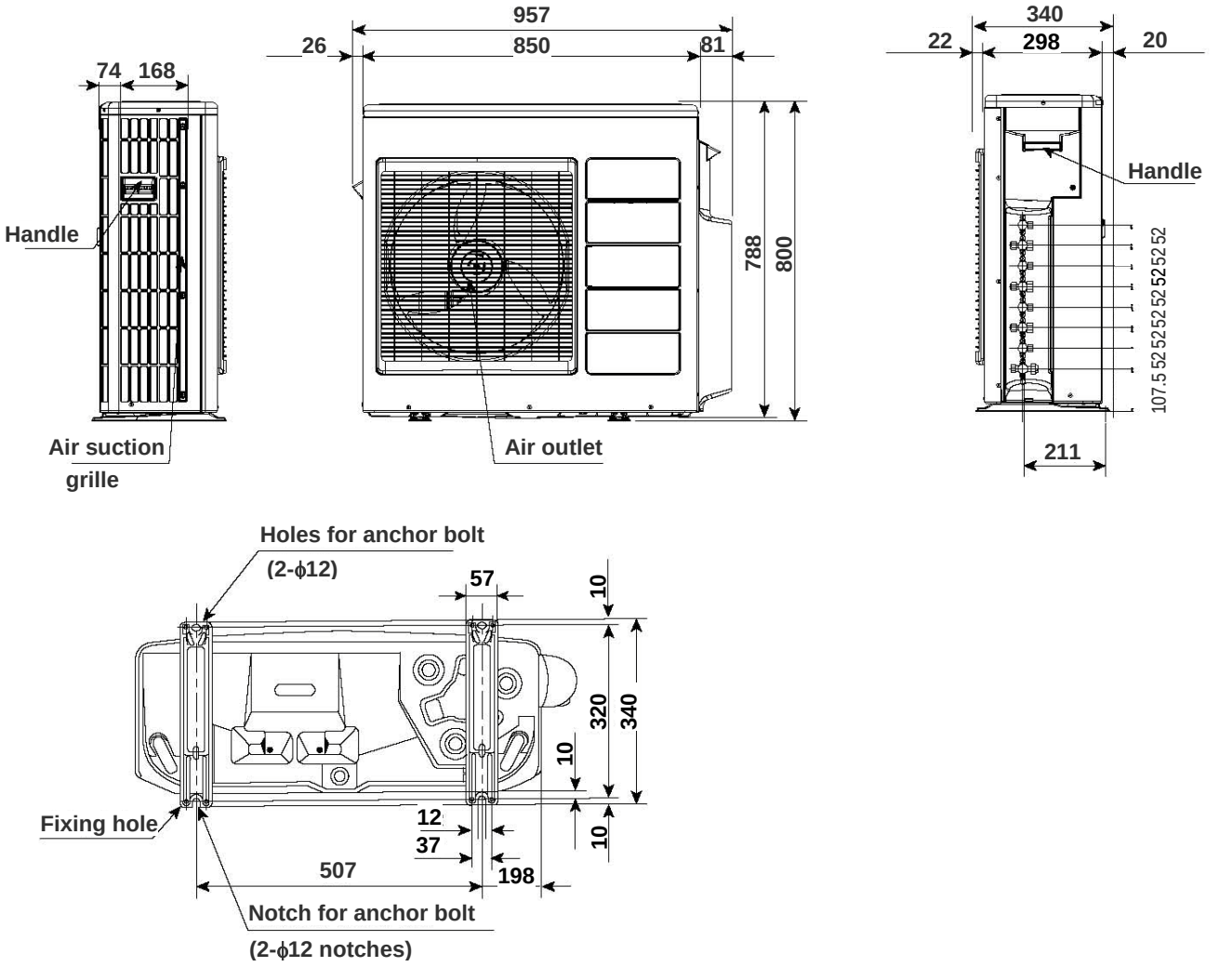

3.2.8. 5 ROOMS MULTIZONE: RAM-90NP5A

Unit: mm

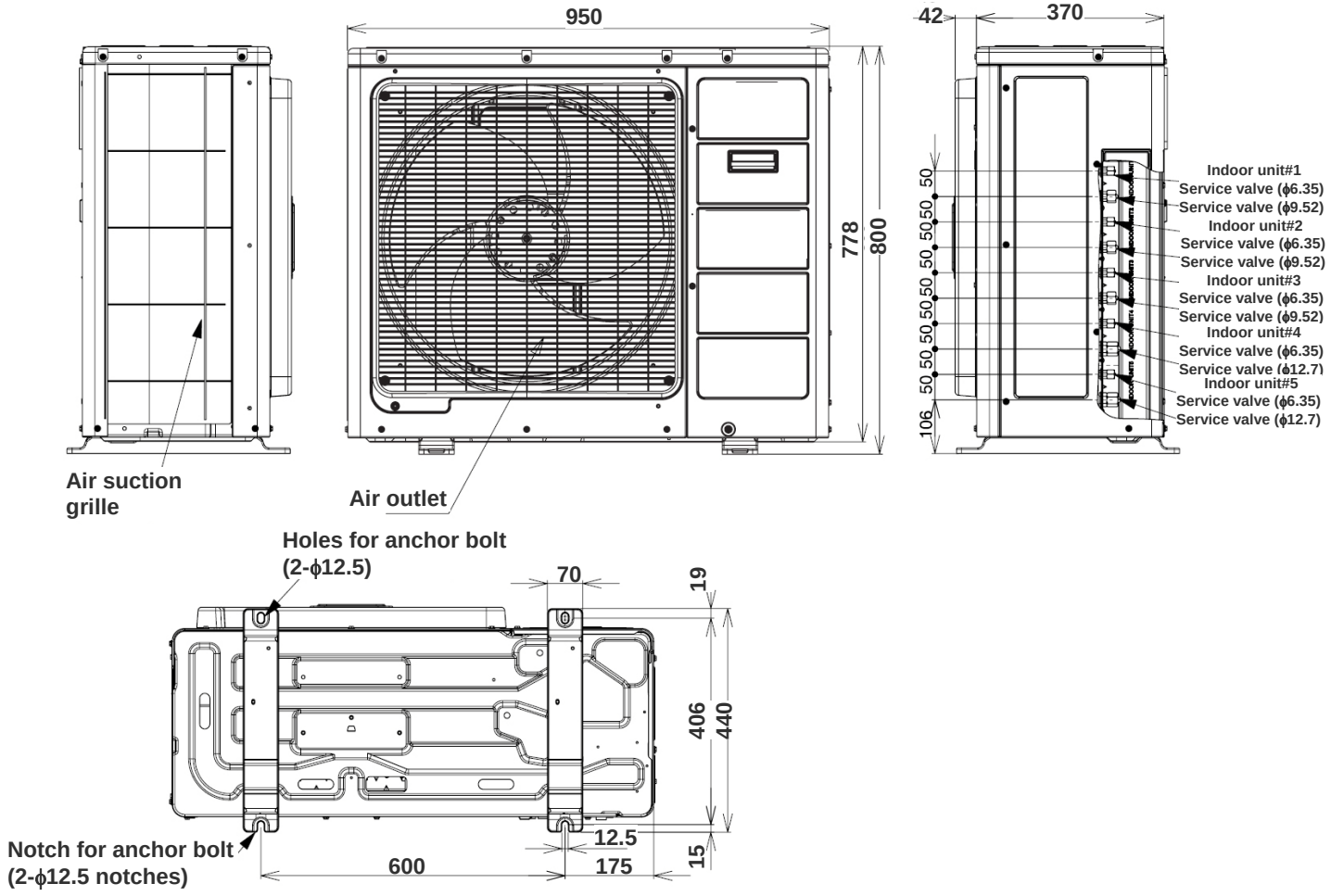

3.2.9. 6 ROOMS MULTIZONE: RAM-130NP6A

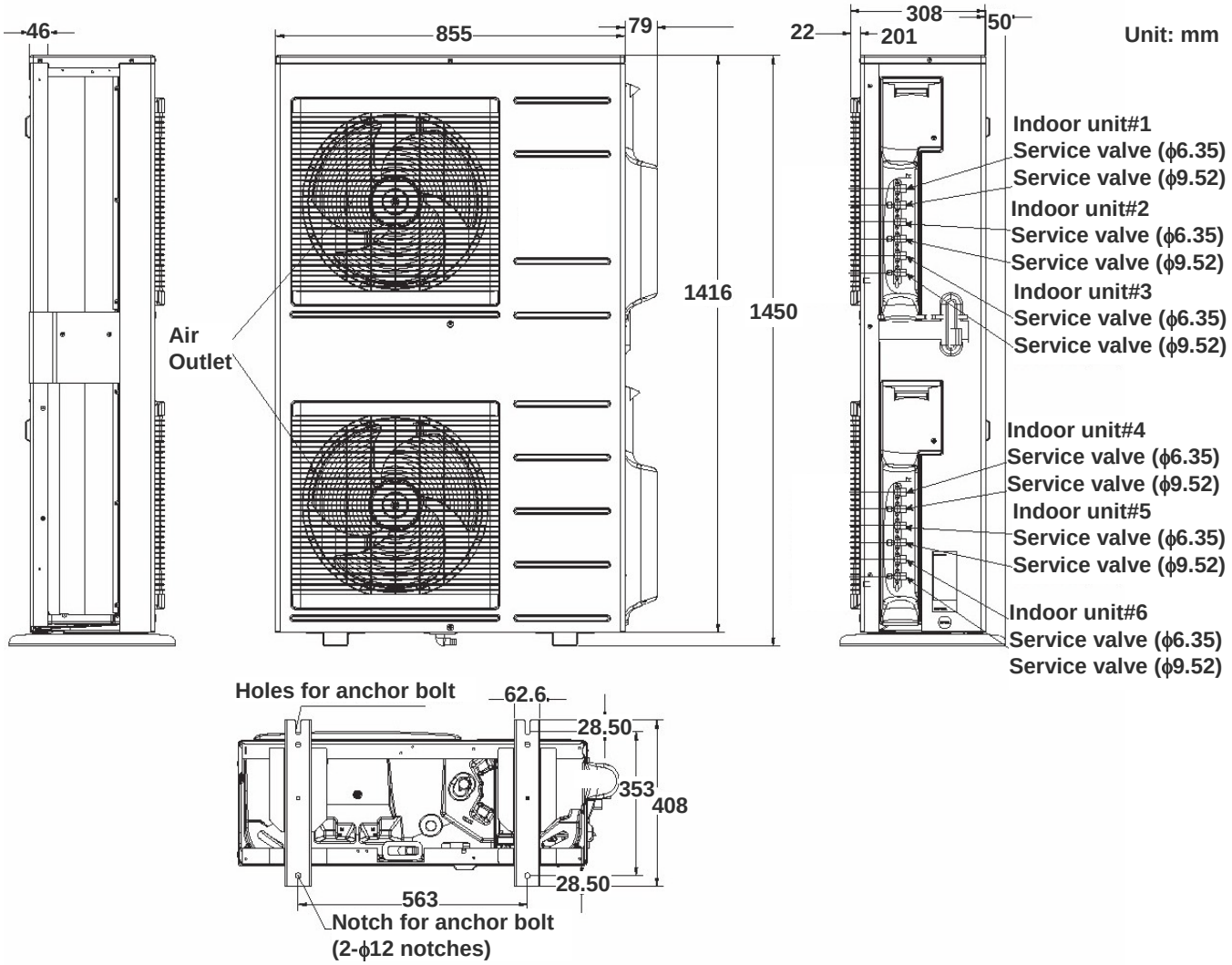

3.3. MONO SPLIT

3.3.1. WALL TYPE: RAK-18PSA/25PSA/35PSA/18PSAN/25PSAN/35PSAN

Unit: mm

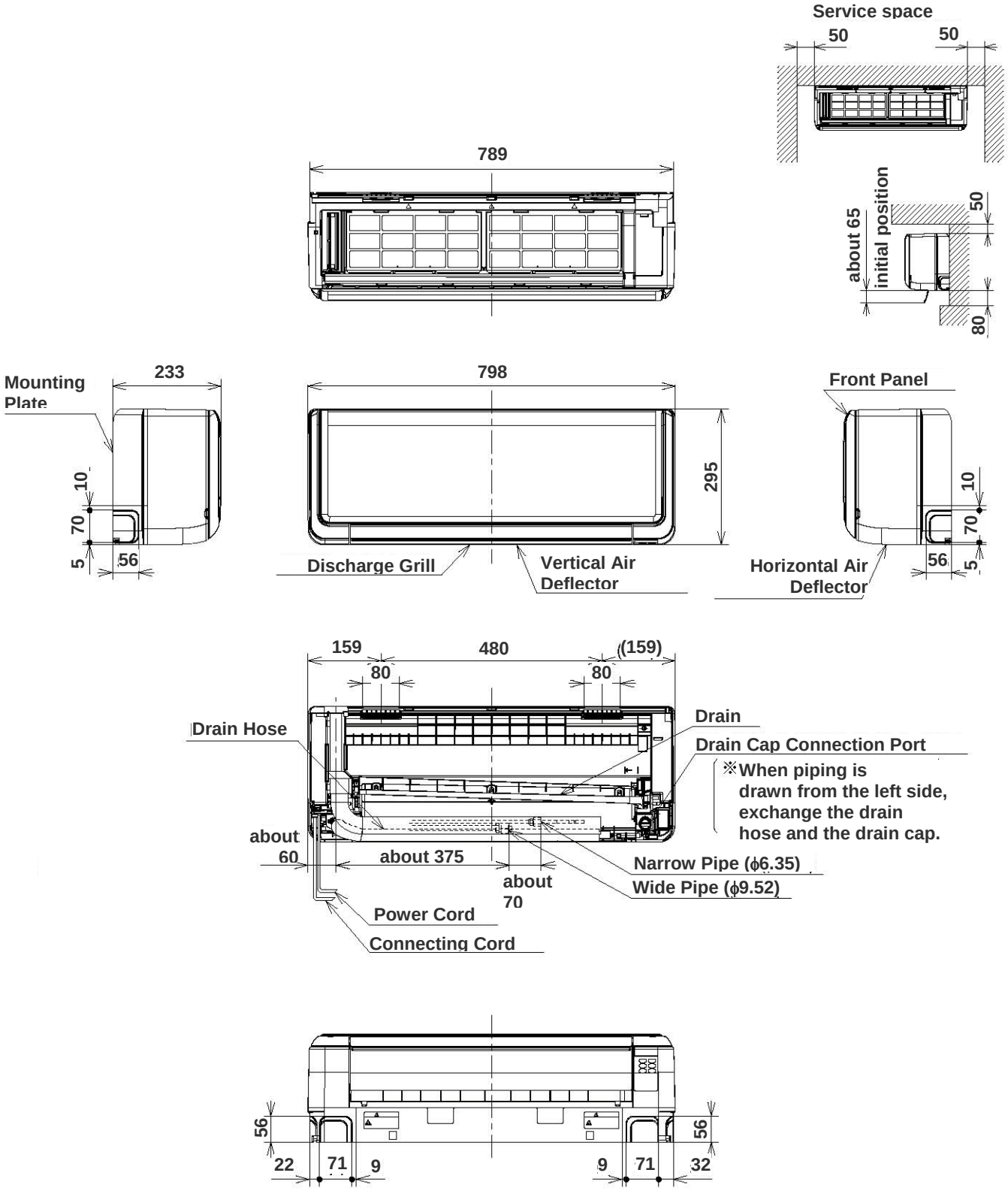

3.3.2. WALL TYPE: RAC-18WSA/25WSA/35WSA/18WSAN/25WSAN/35WSAN

Unit: mm

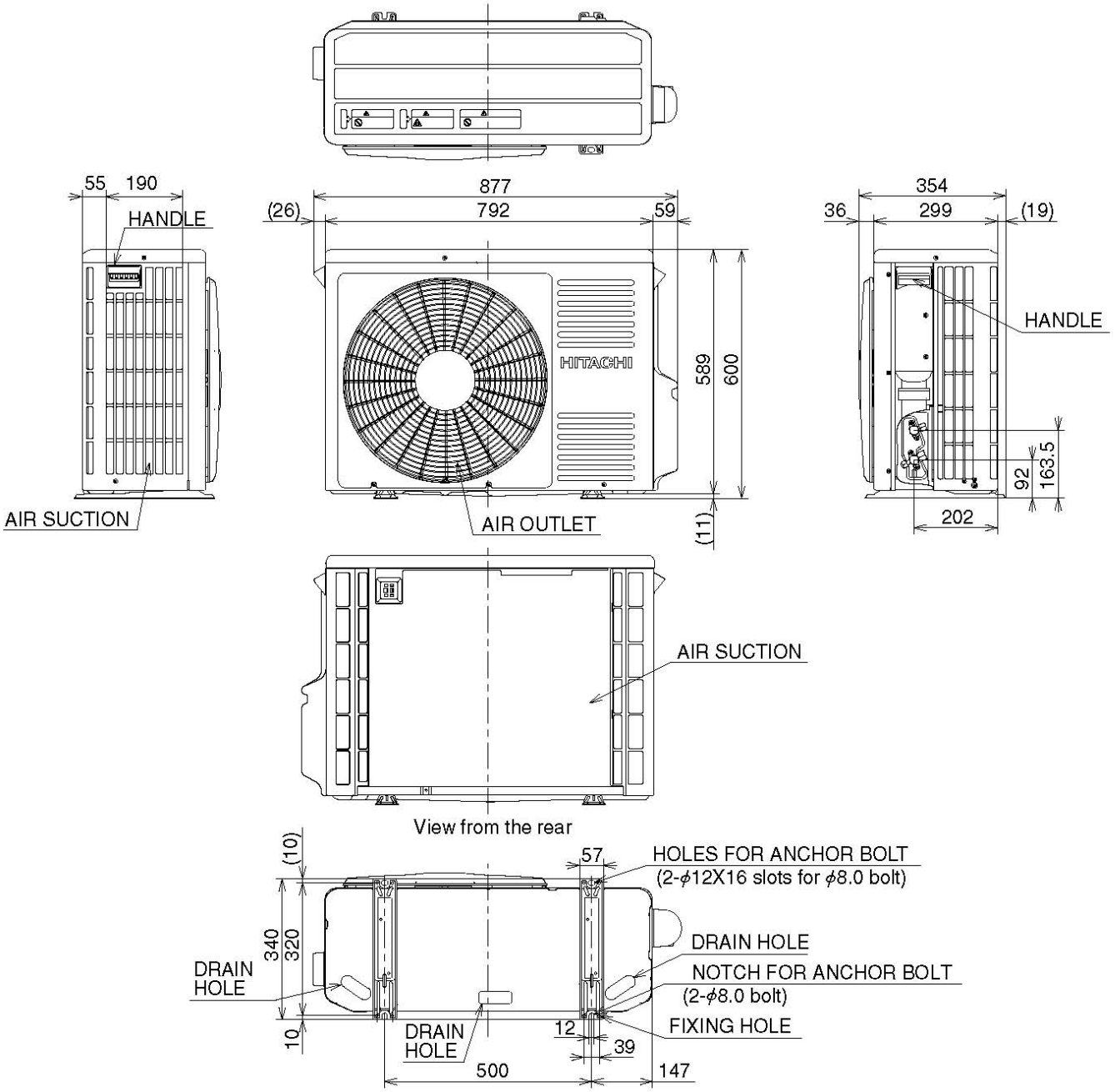

3.3.3. WALL TYPE: RAK-18PSPA/25PSPA/35PSPA

Unit: mm

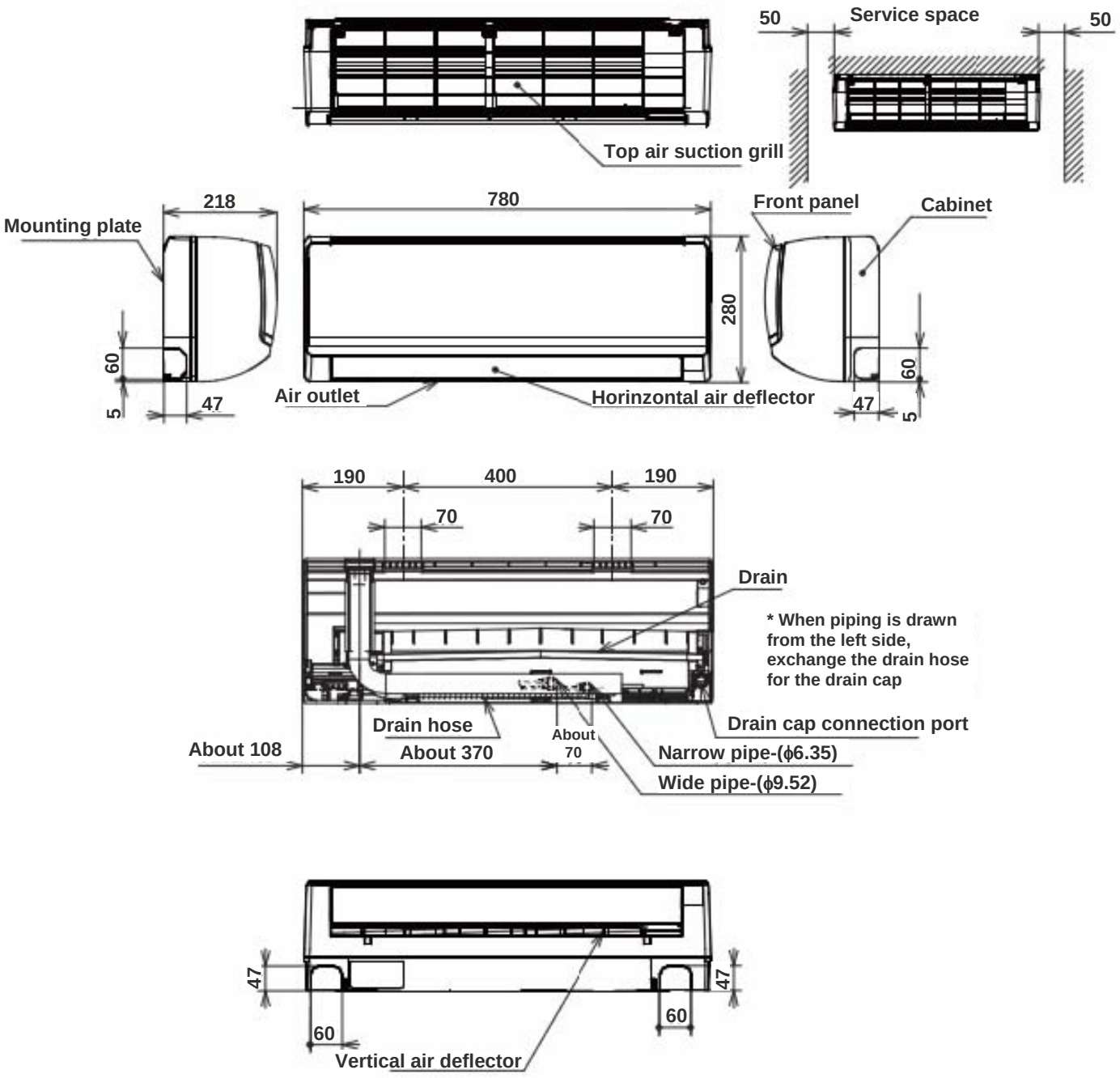

3.3.4. WALL TYPE: RAC-18WSPA/25WSPA/35WSPA

Unit : mm

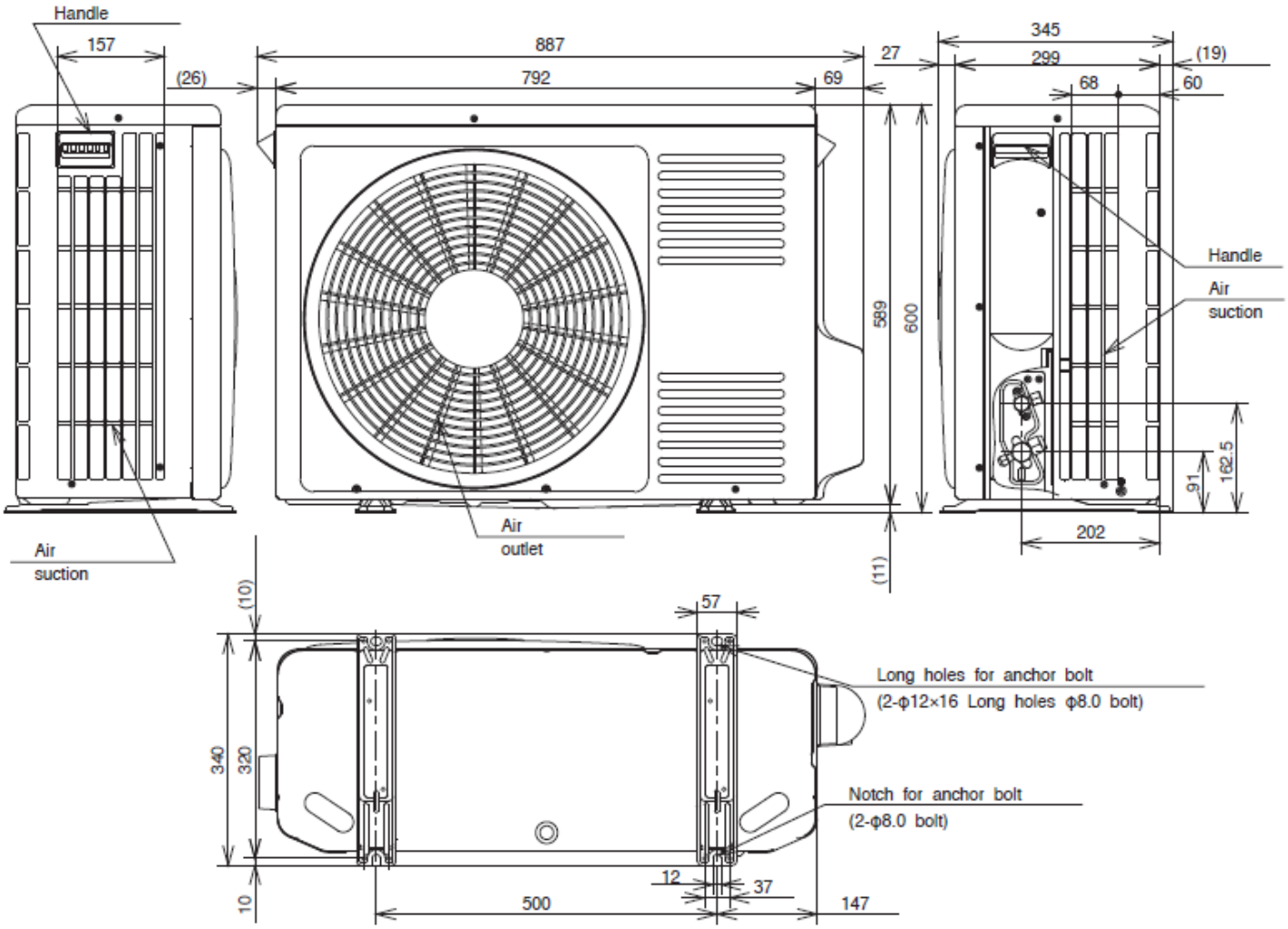

3.3.5. WALL TYPE: RAK-25PXA/35PXA/50PXA

Unit: mm

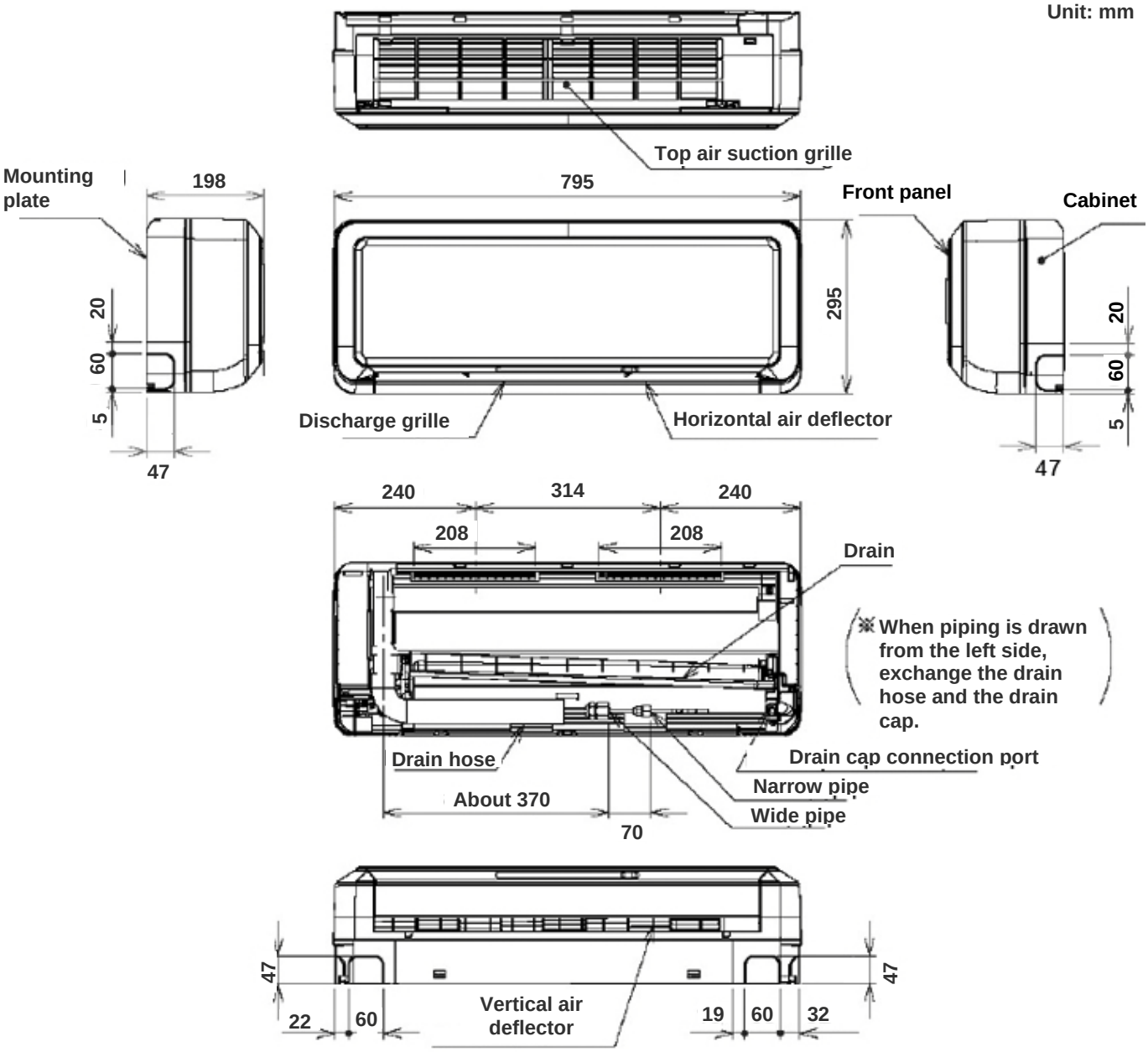

3.3.6. WALL TYPE: RAC-25WXA/35WXA

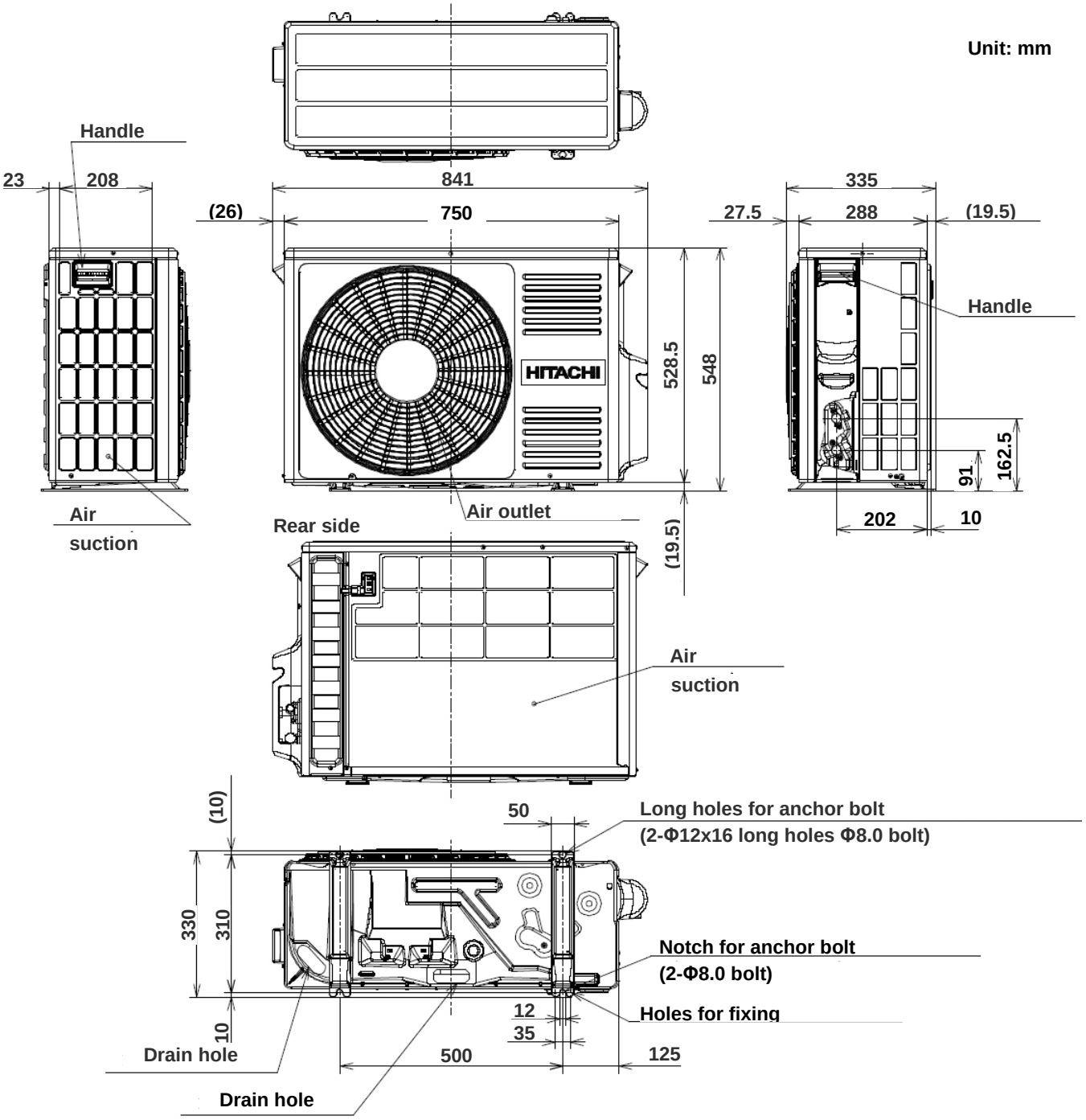

3.3.7. WALL TYPE: RAC-50WXA

Unit: mm

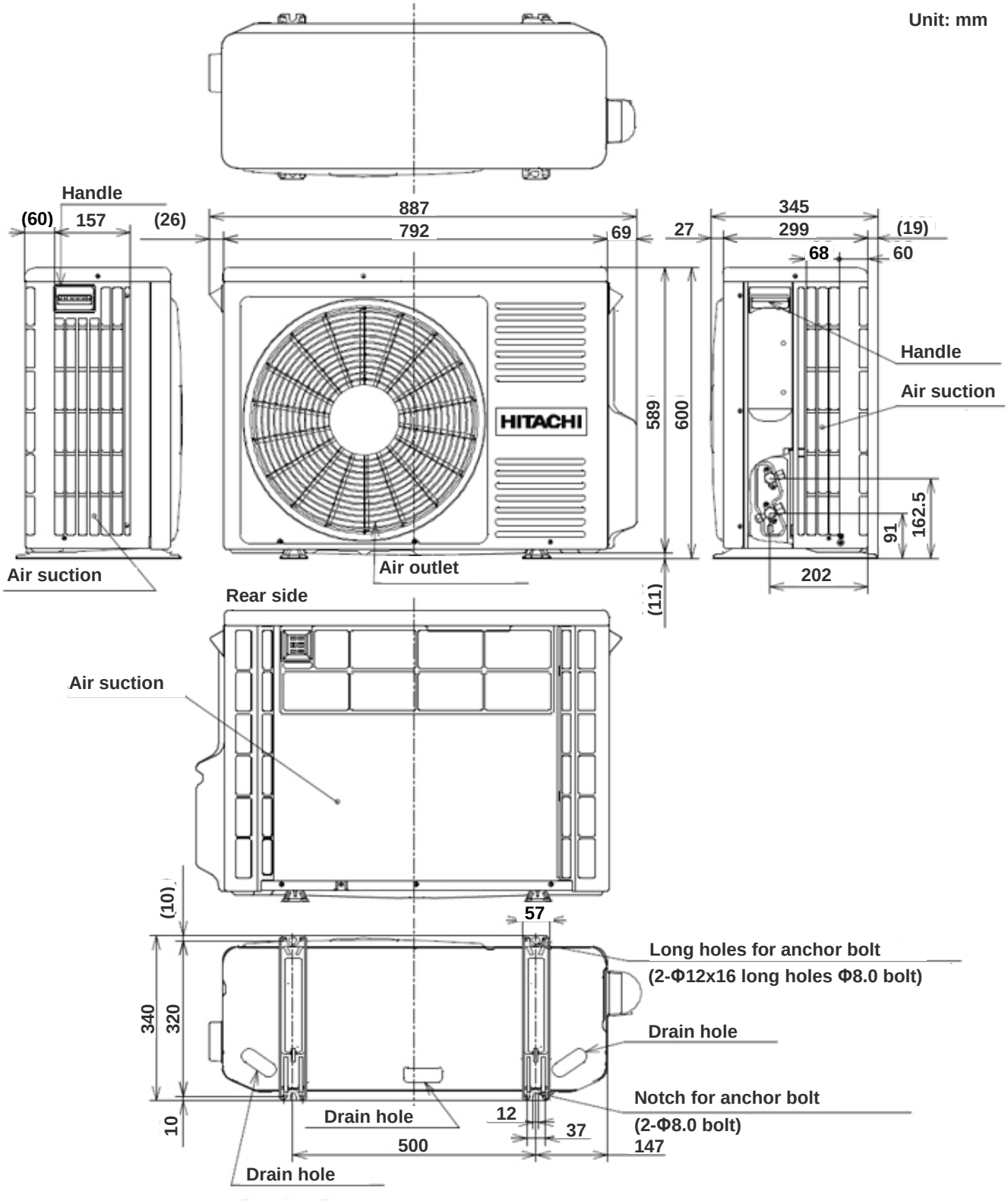

3.3.8. WALL TYPE: RAK-18PPA/25PPA/35PPA

Unit : mm

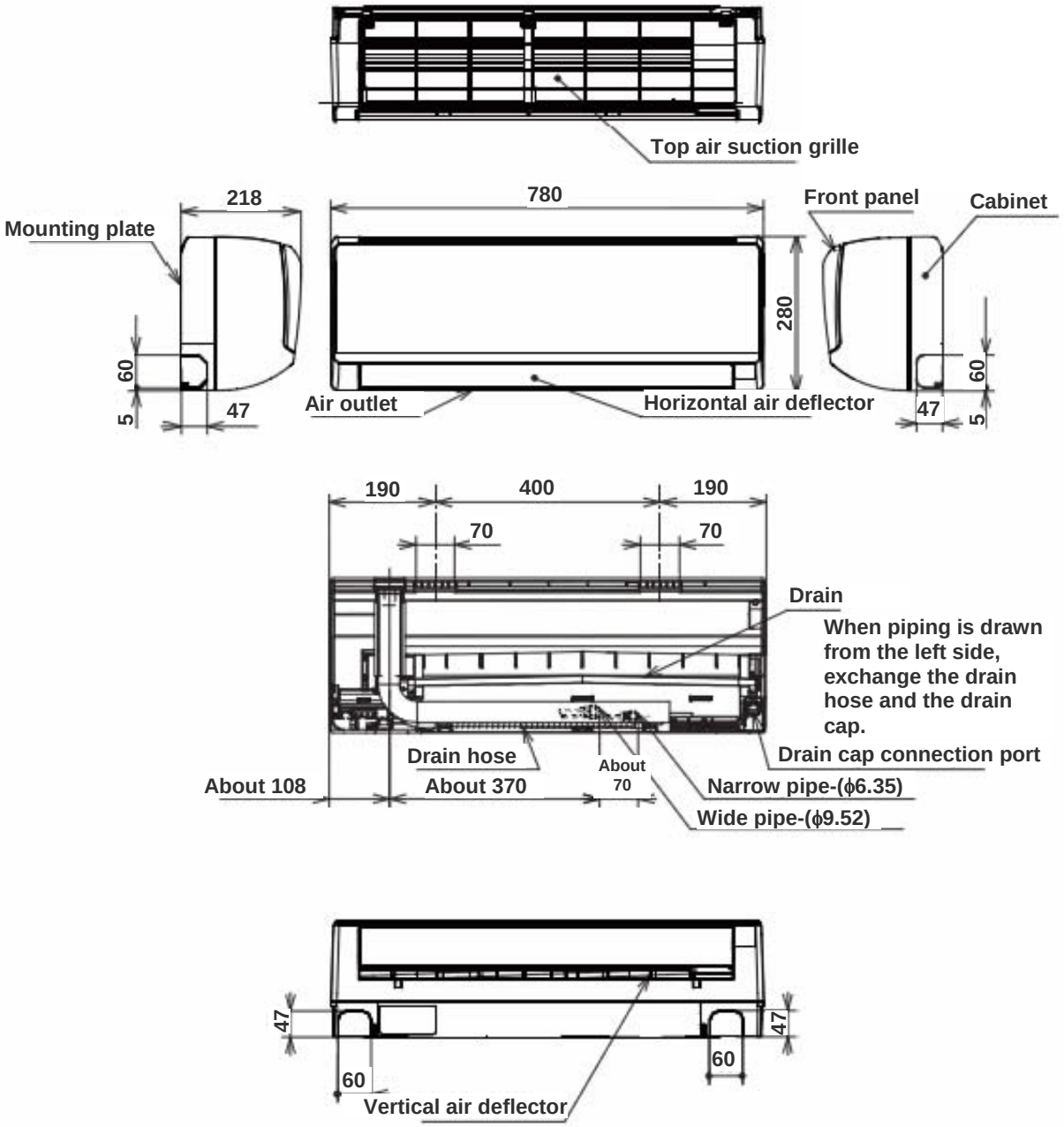

3.3.9. WALL TYPE: RAC-18WPA/25WPA

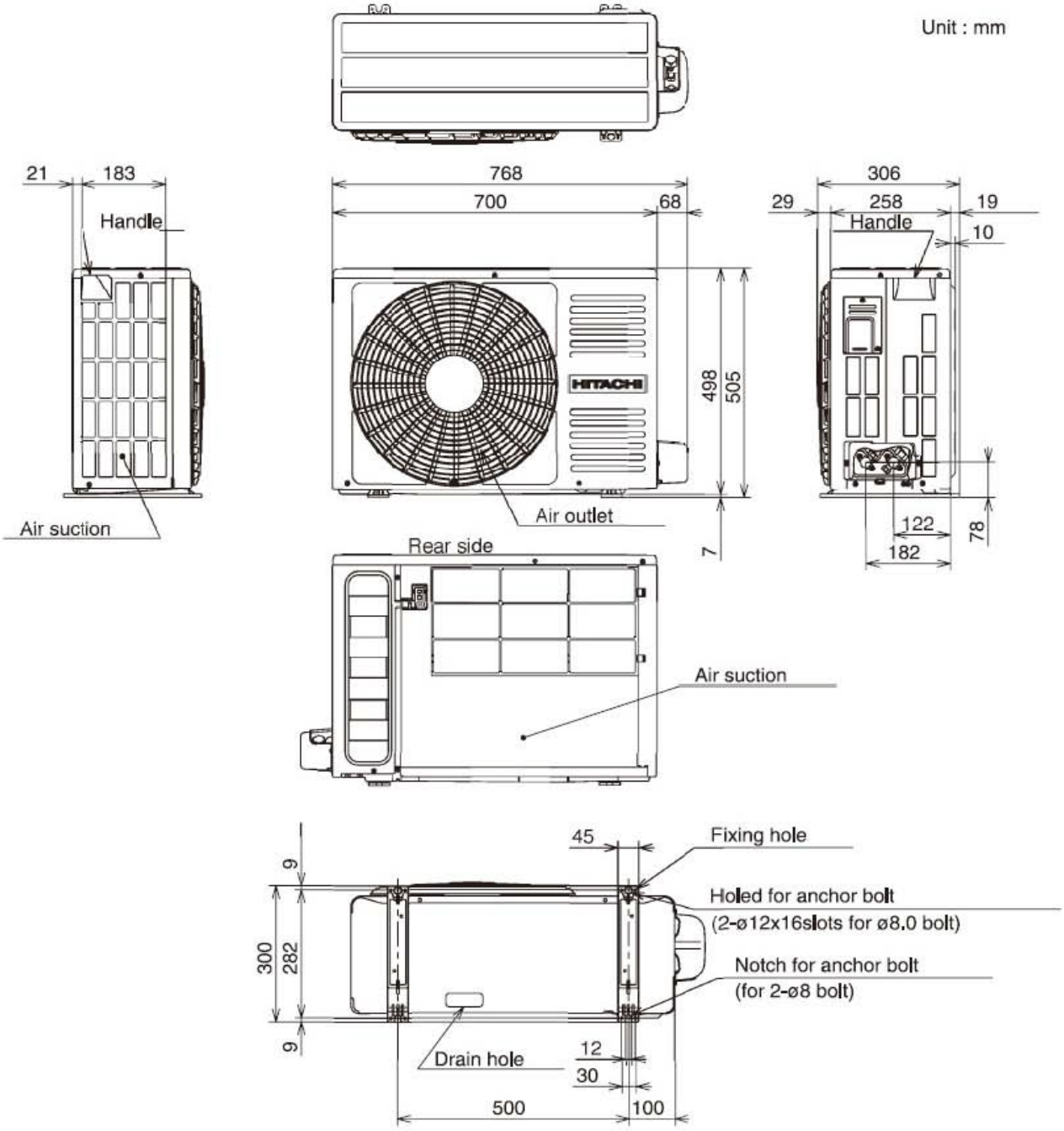

3.3.10. WALL TYPE: RAC-35WPA

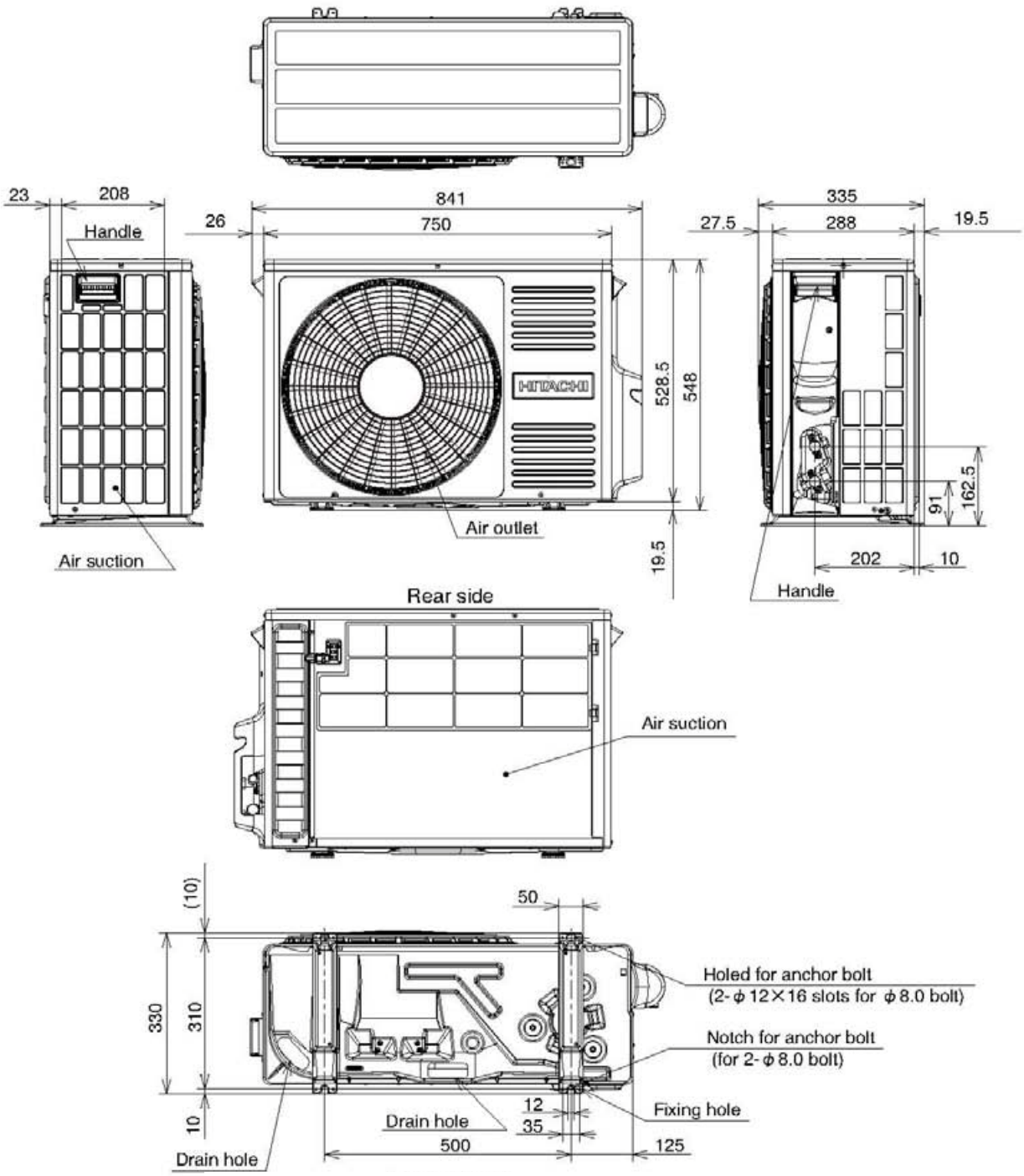

3.3.11. WALL TYPE: RAK-50PPA

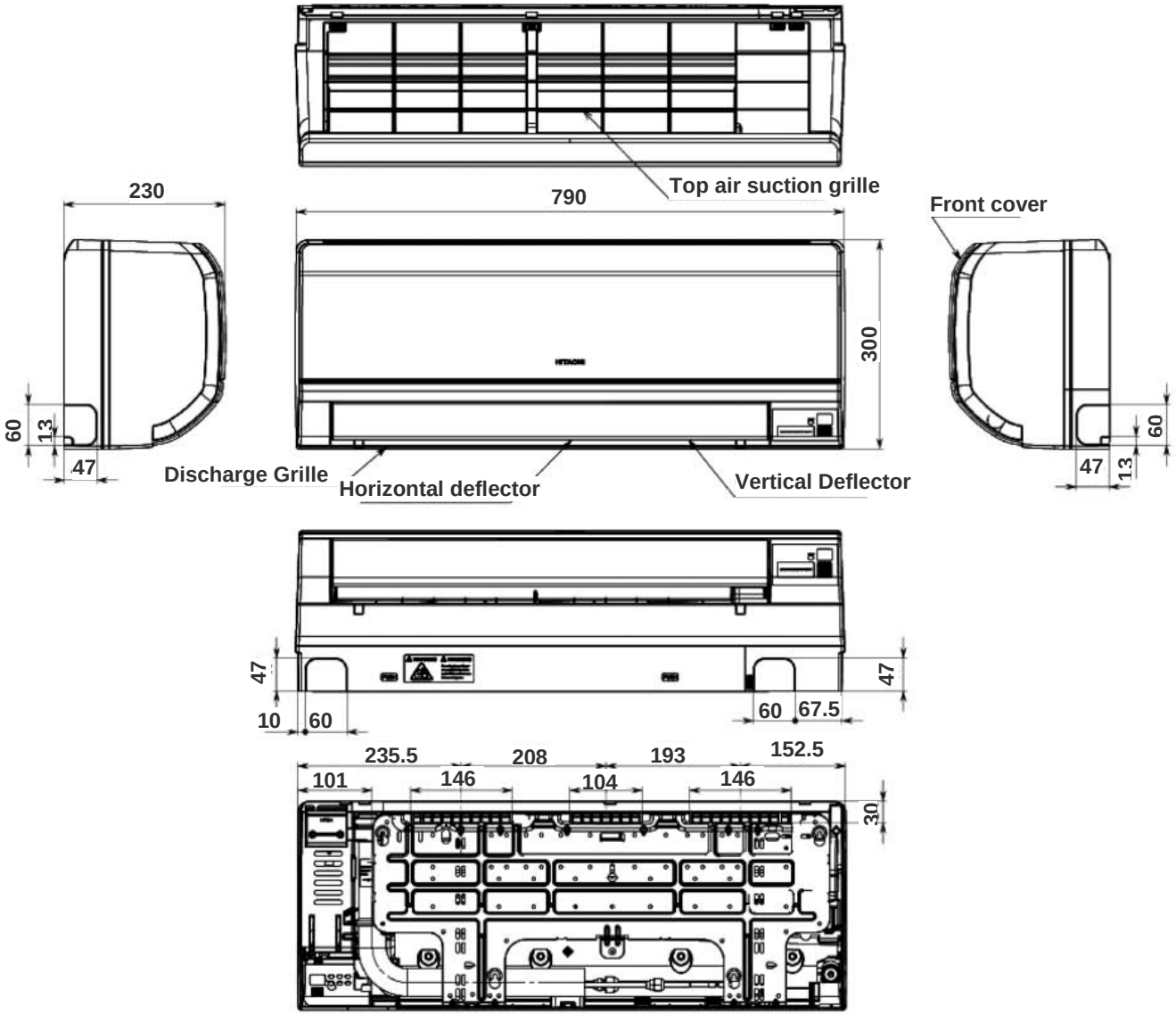

3.3.12. WALL TYPE: RAC-50WPA

Unit: mm

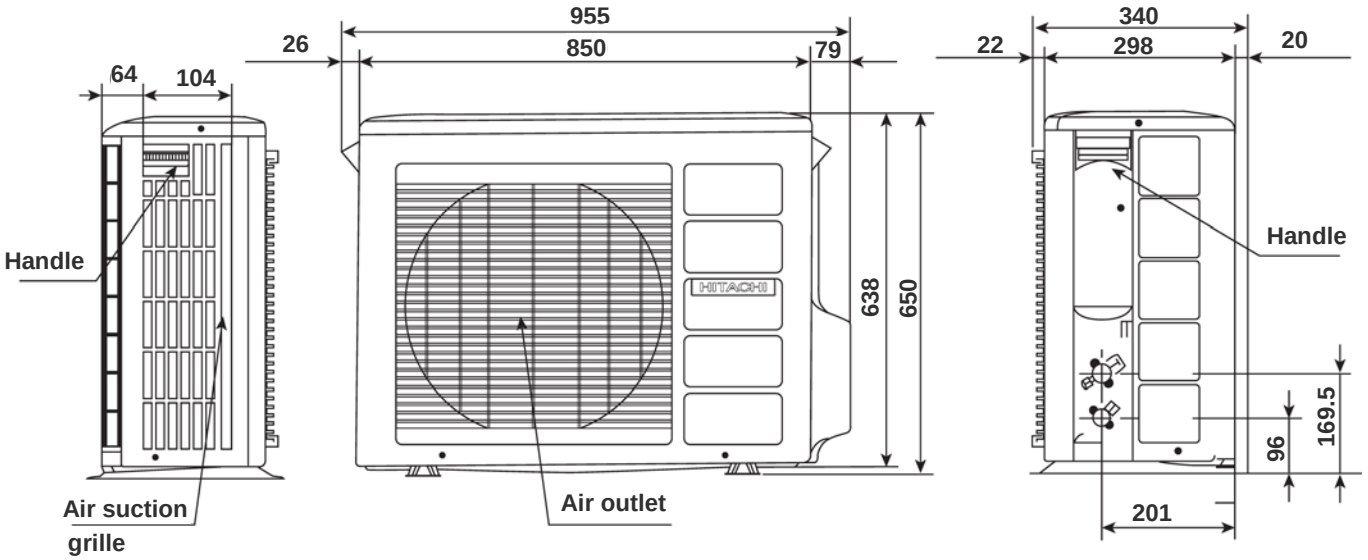

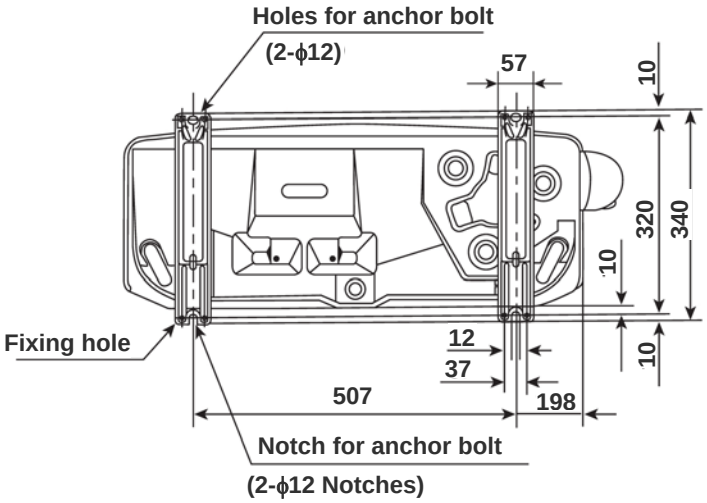

3.3.13. WALL TYPE : RAK-60PPA

Unit: mm

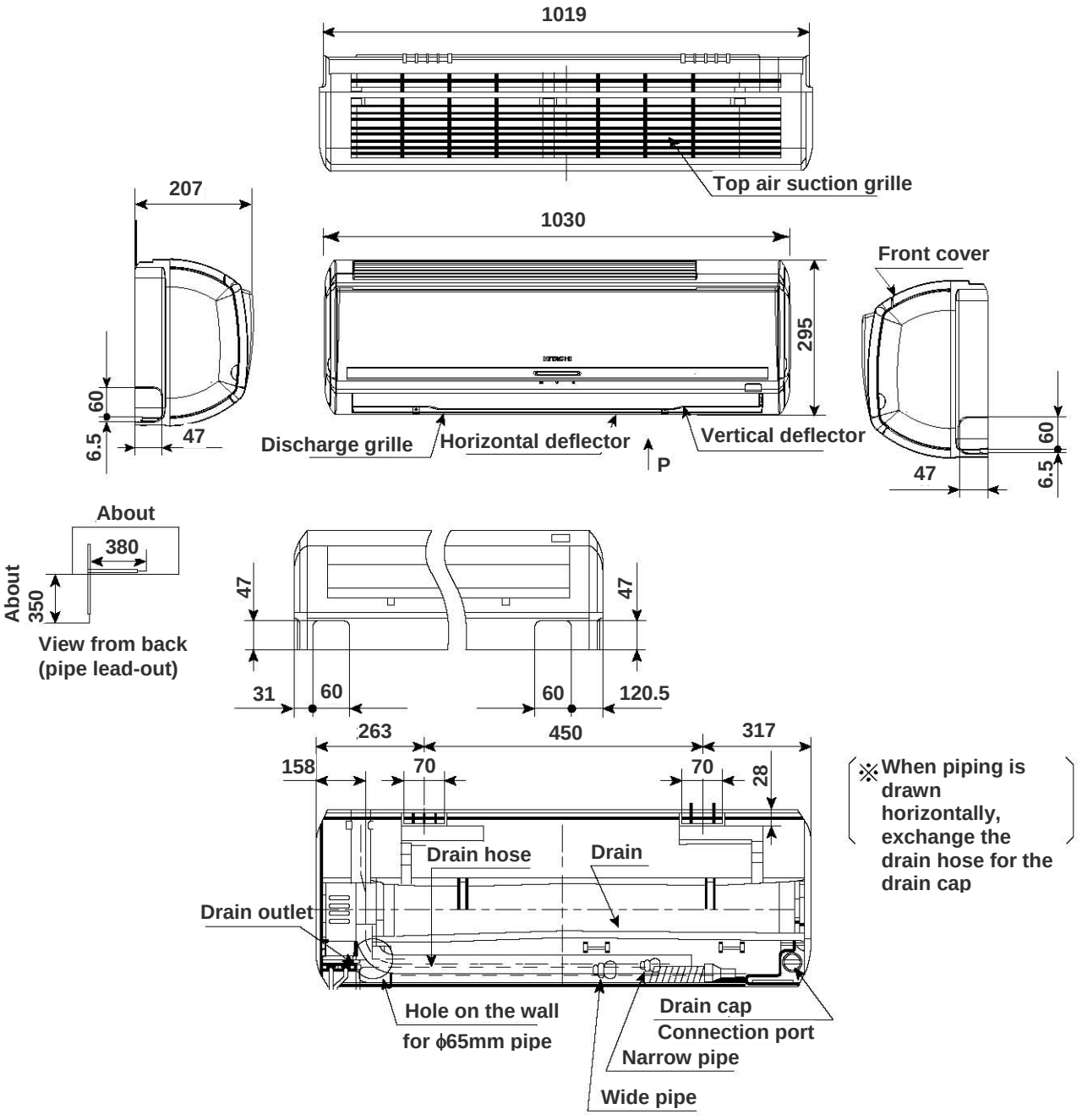

3.3.14. WALL TYPE: RAC-60WPA

Unit: mm

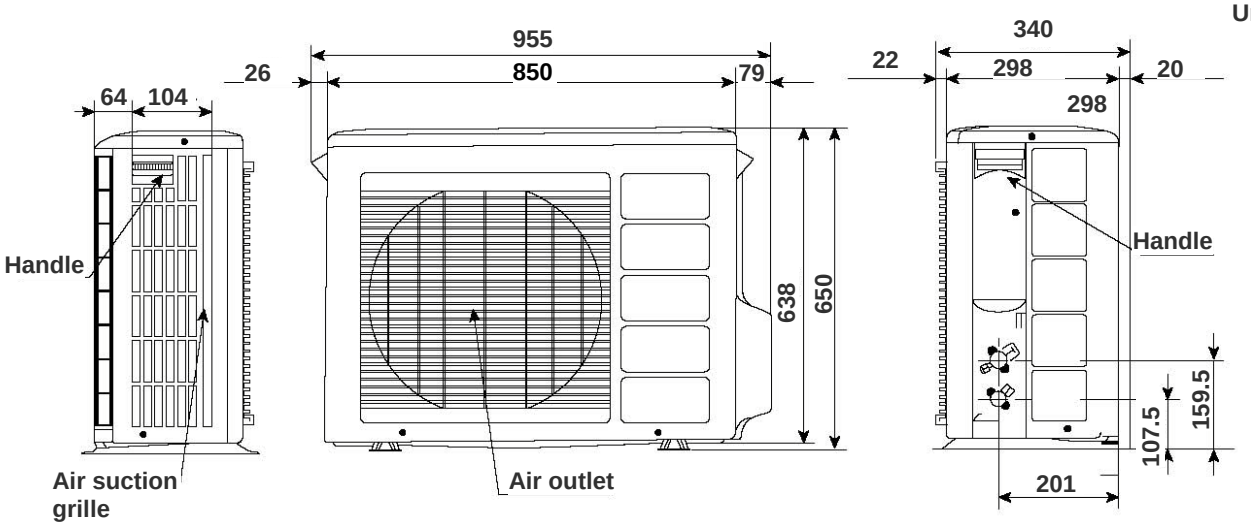

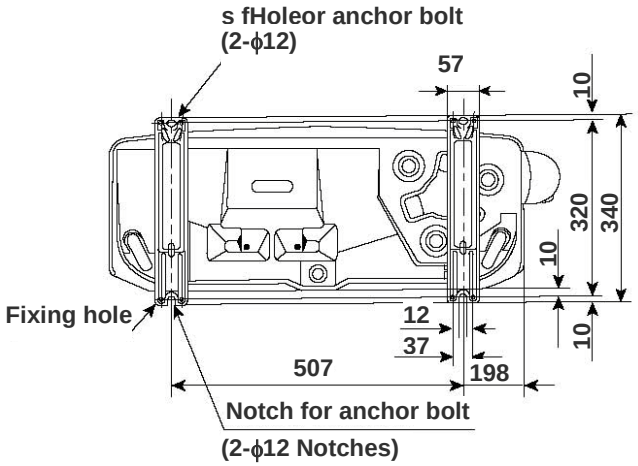

3.3.15. WALL TYPE: RAK-70PPA

Unit: mm

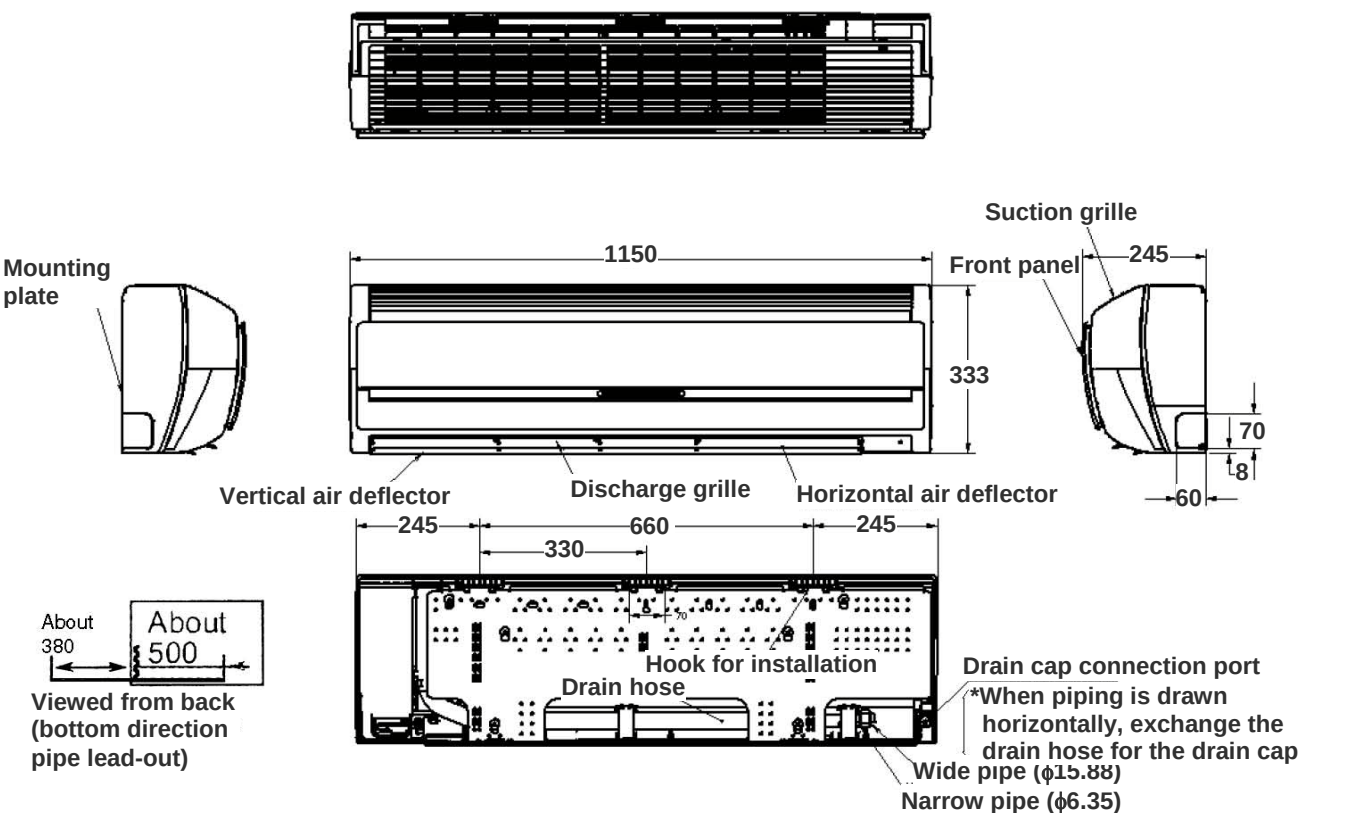

Notes:

1. Service space (free space needed for servicing is 200mm on the right, 100mm on the left and 50mm on the top.
2. The wide and narrow pipes must be thermally insulated

3.3.16. WALL TYPE: RAC-70WPA

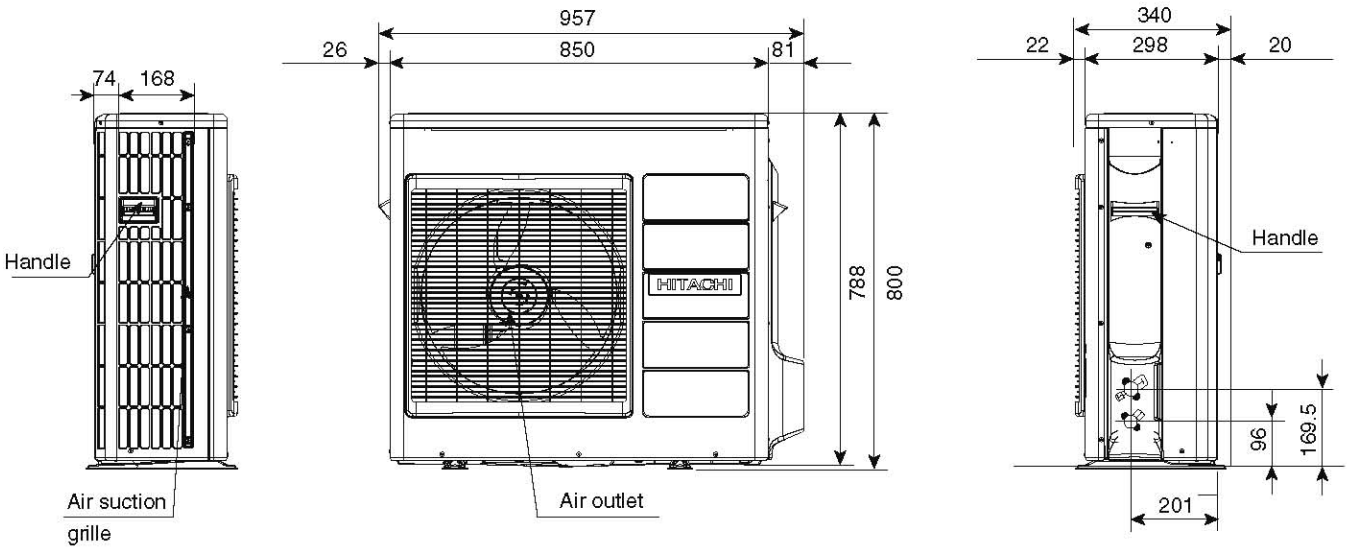

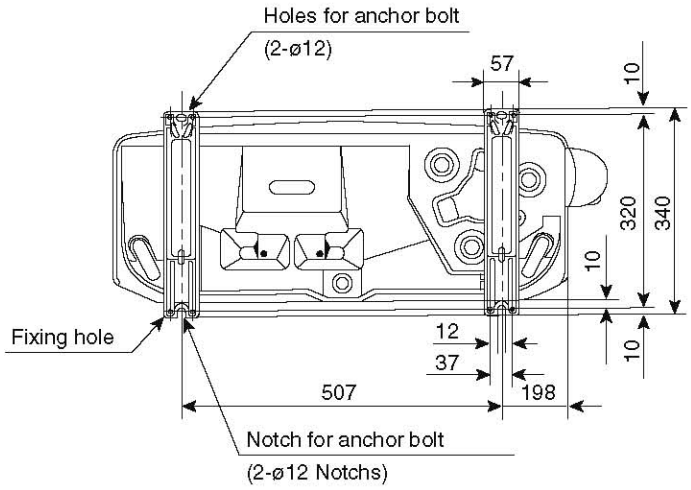

3.3.17. WALL TYPE: RAK-18PEA/25PEA/35PEA/50PEA

Unit : mm

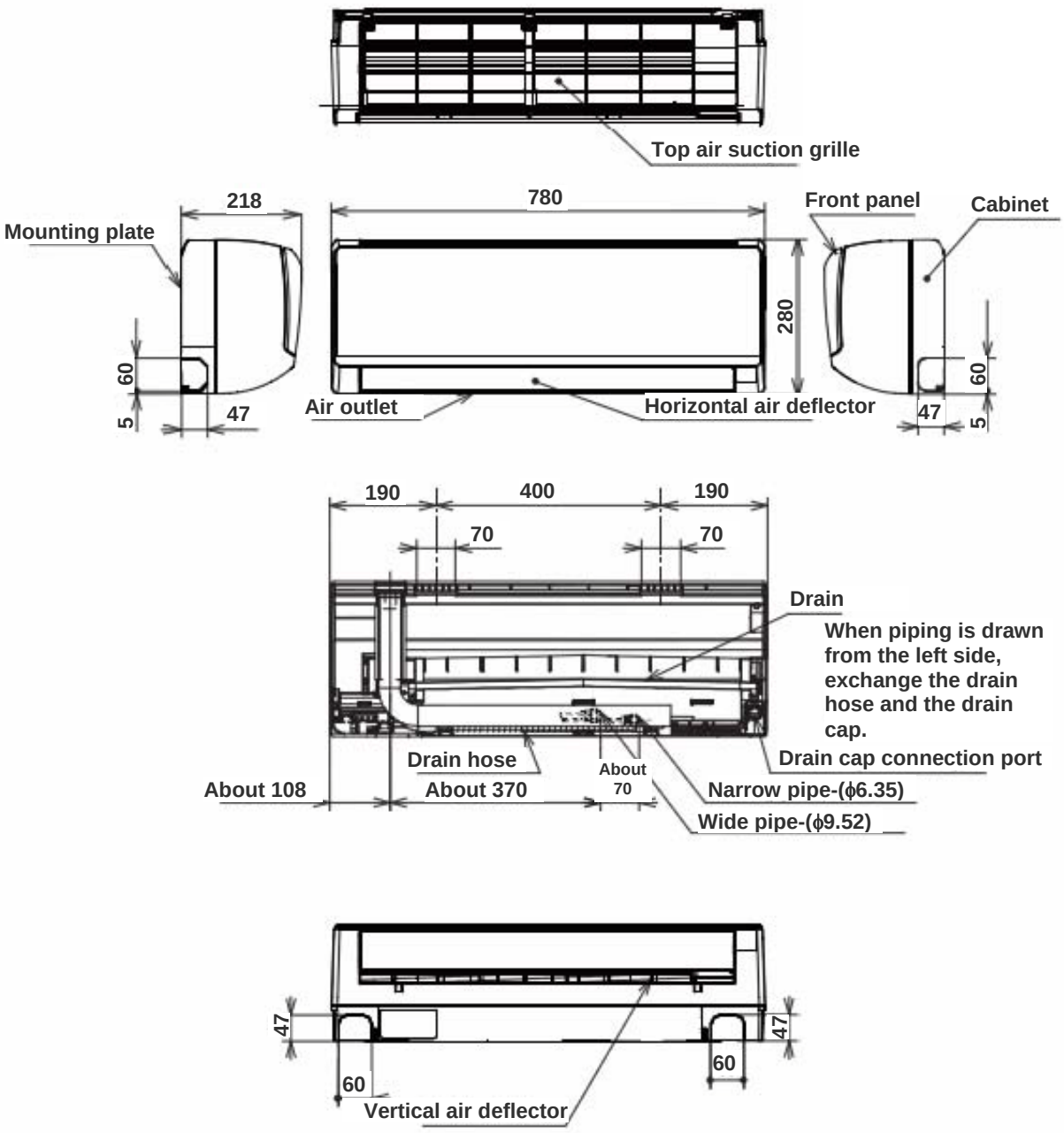

3.3.18. WALL TYPE: RAC-18WEA/25WEA

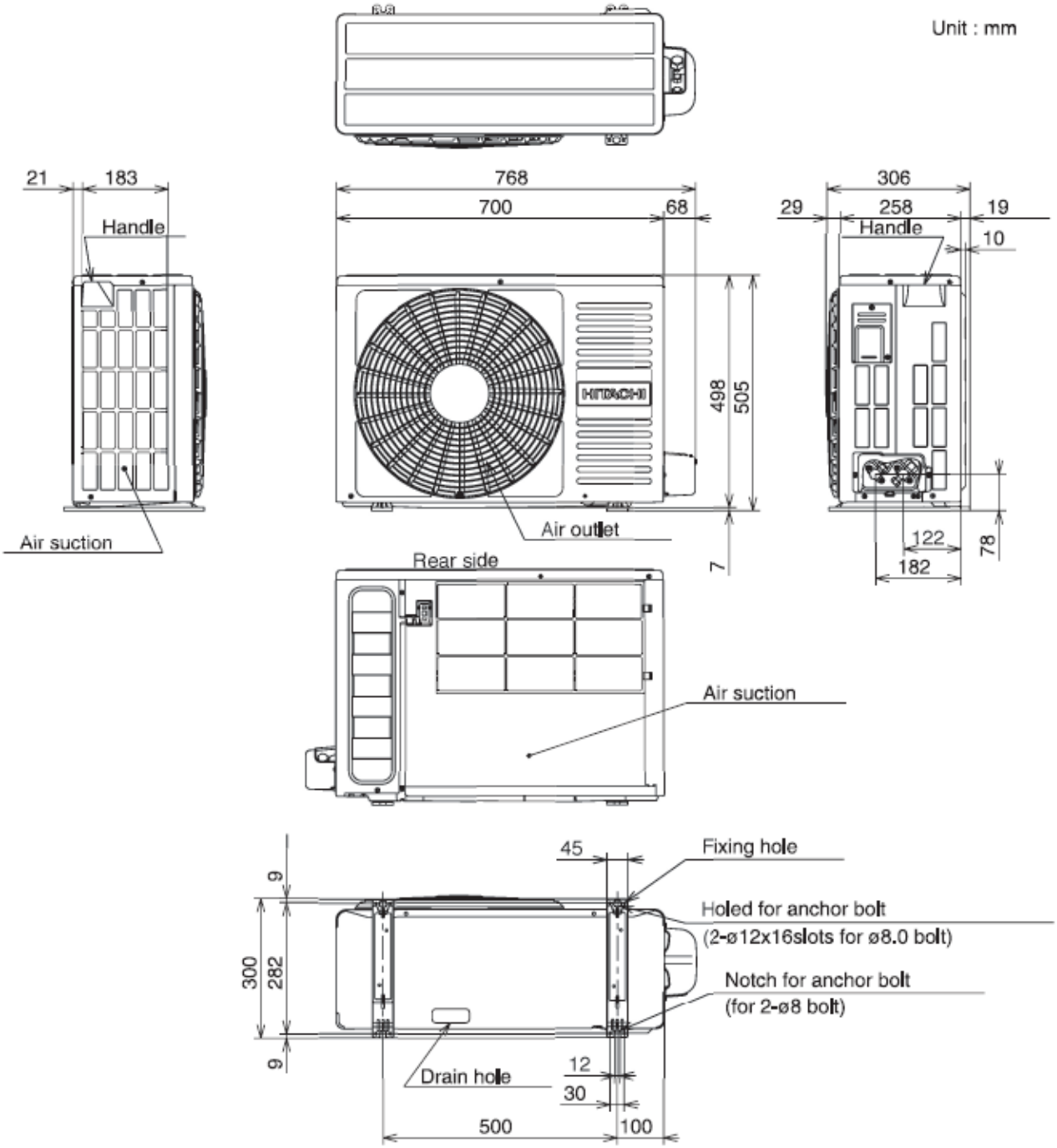

3.3.19. WALL TYPE: RAC-35WEA

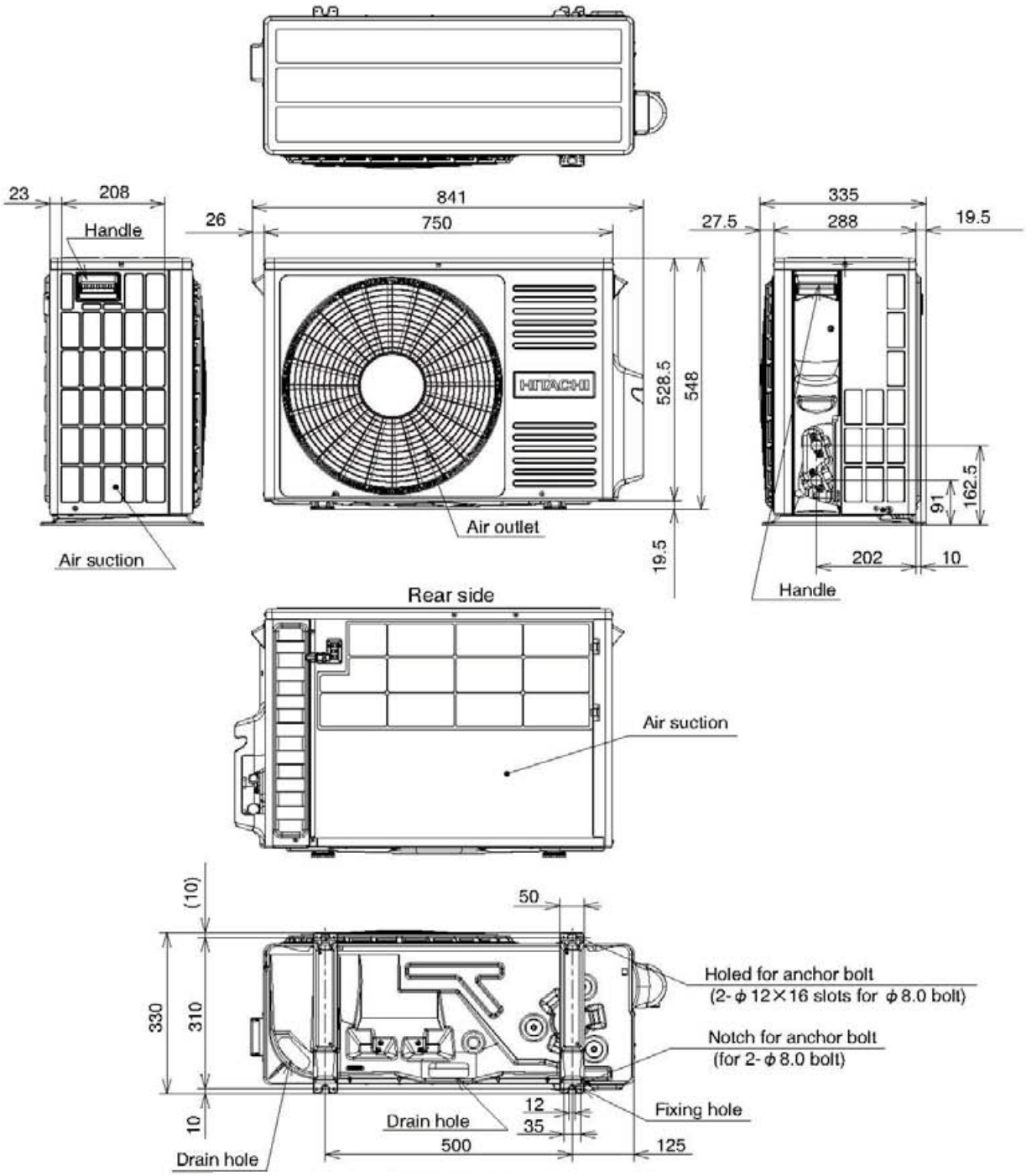

3.3.20. WALL TYPE: RAC-50WEA

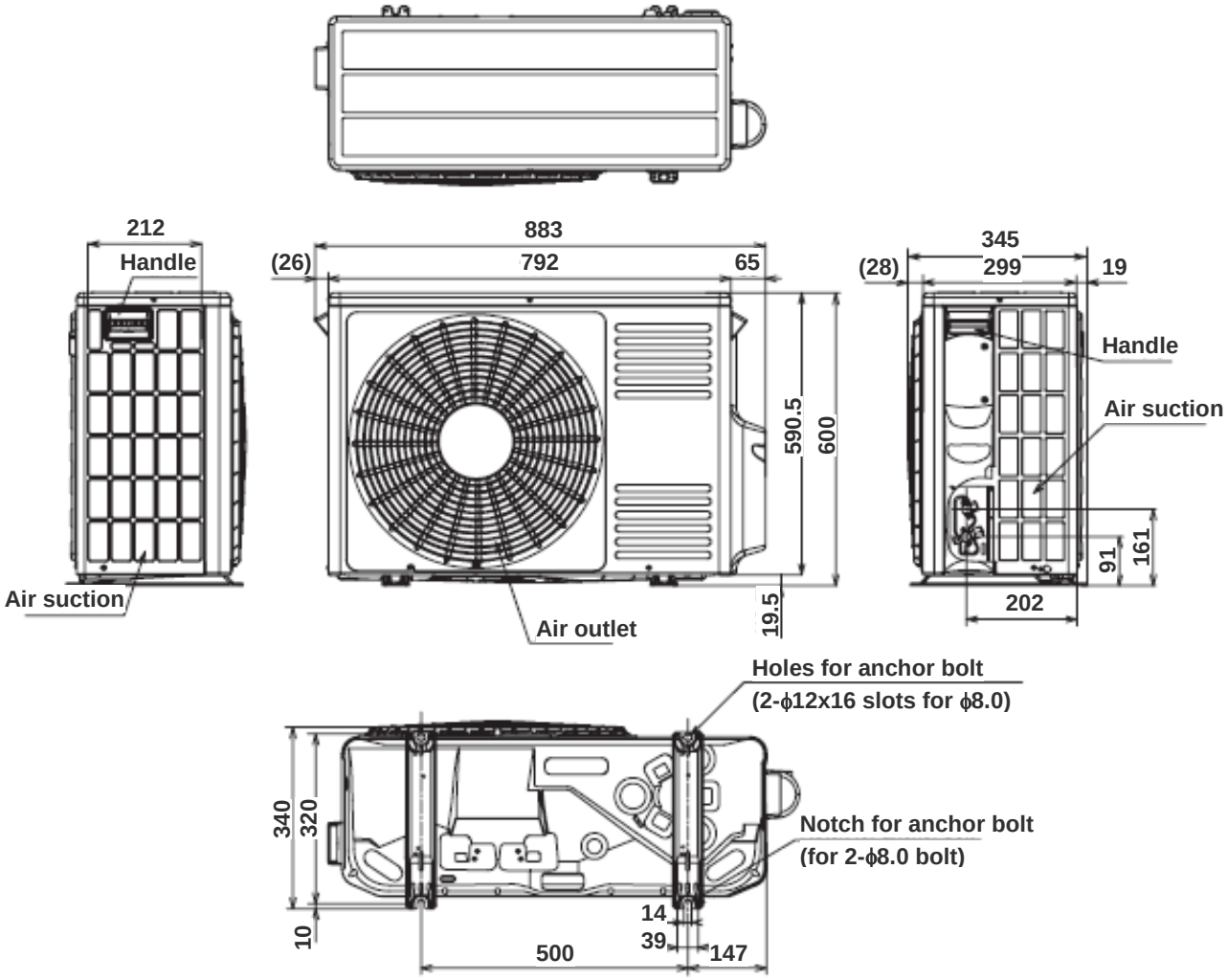

3.3.21. FLOOR TYPE: RAF-25PXA/35PXA/50PXA

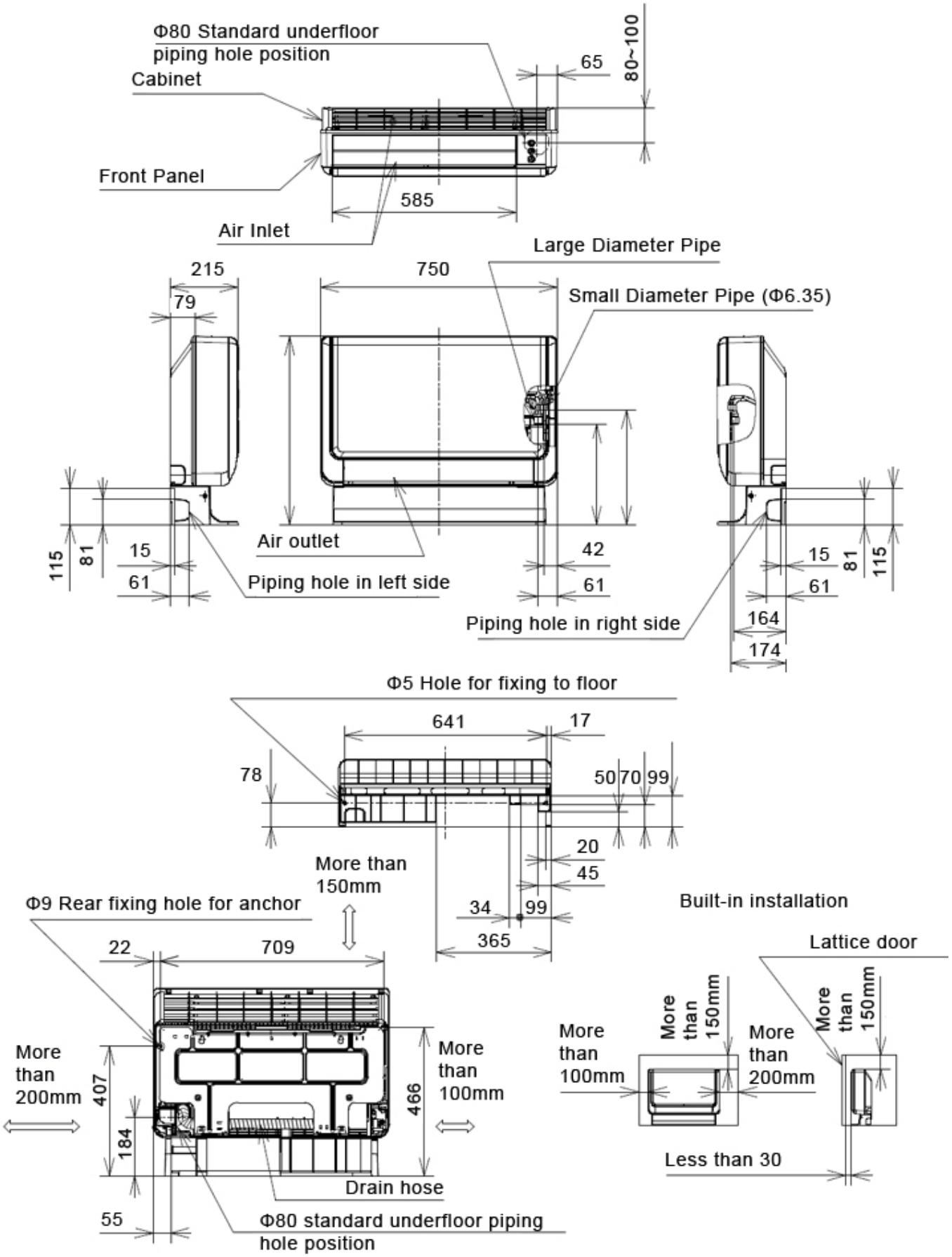

3.3.22. FLOOR TYPE: RAC-25FXA/35FXA

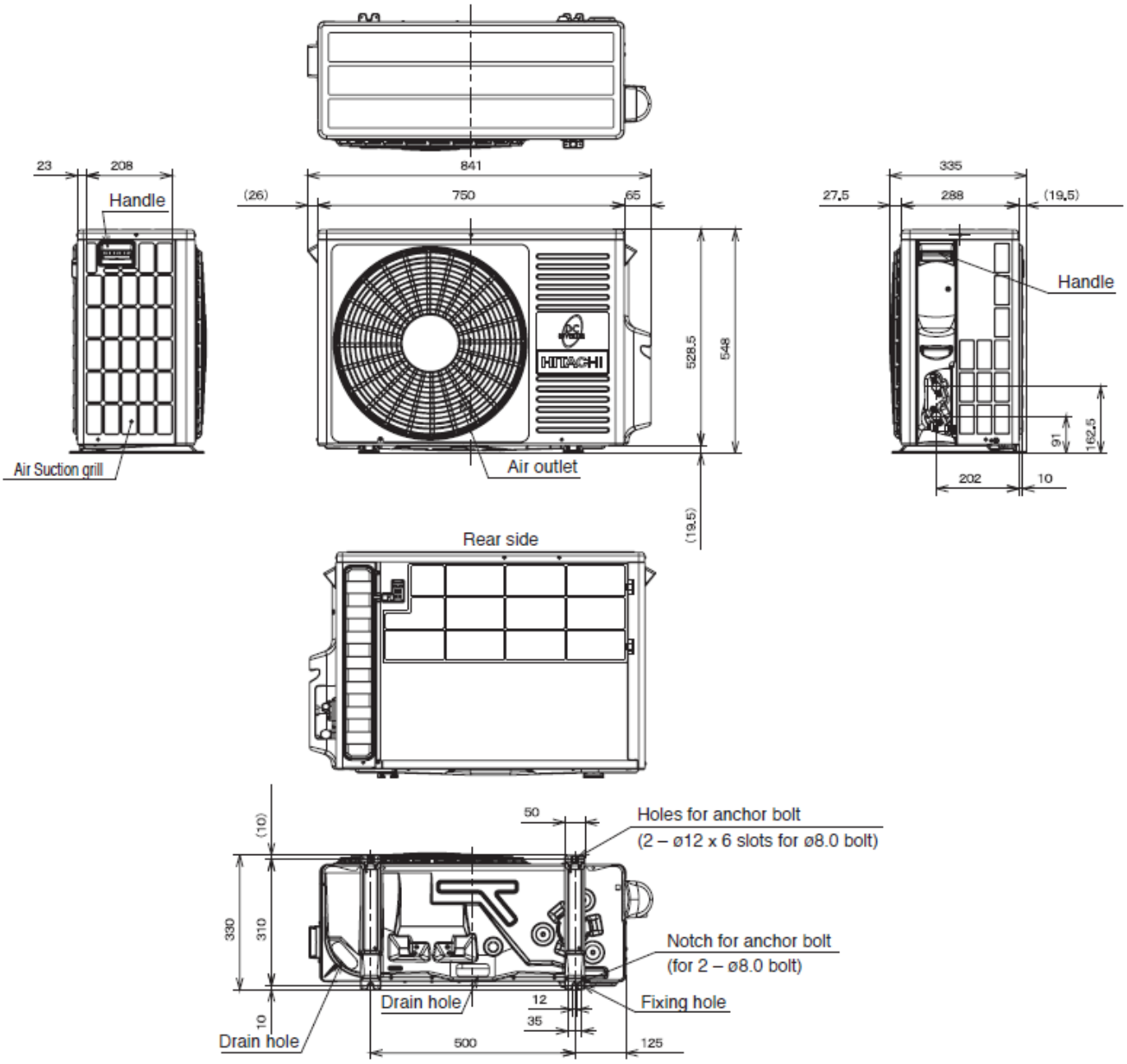

3.3.23. FLOOR TYPE: RAC-50FXA

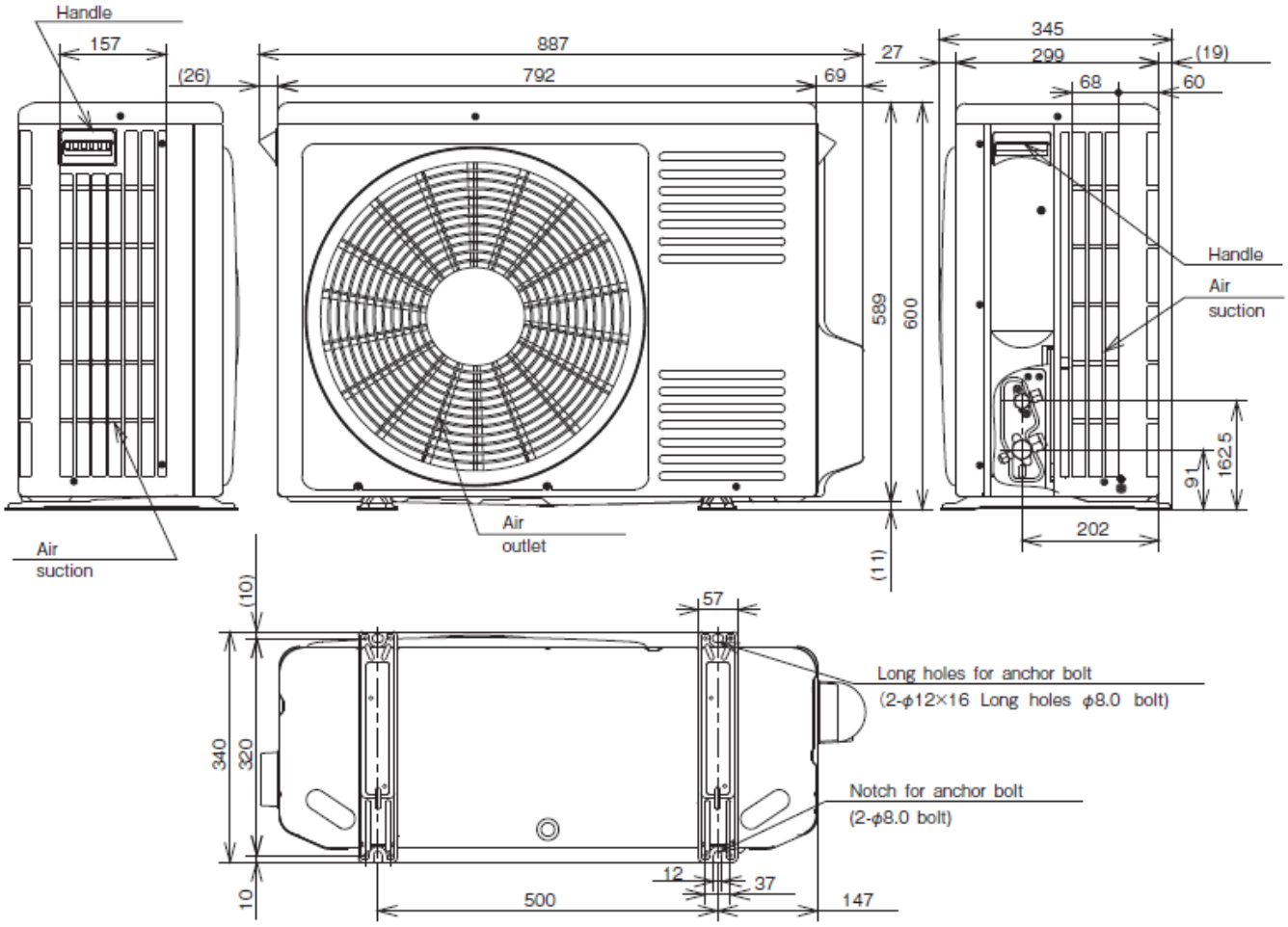

3.3.24. FLOOR TYPE: RAF-25RPA/35RPA/50RPA

Unit: mm

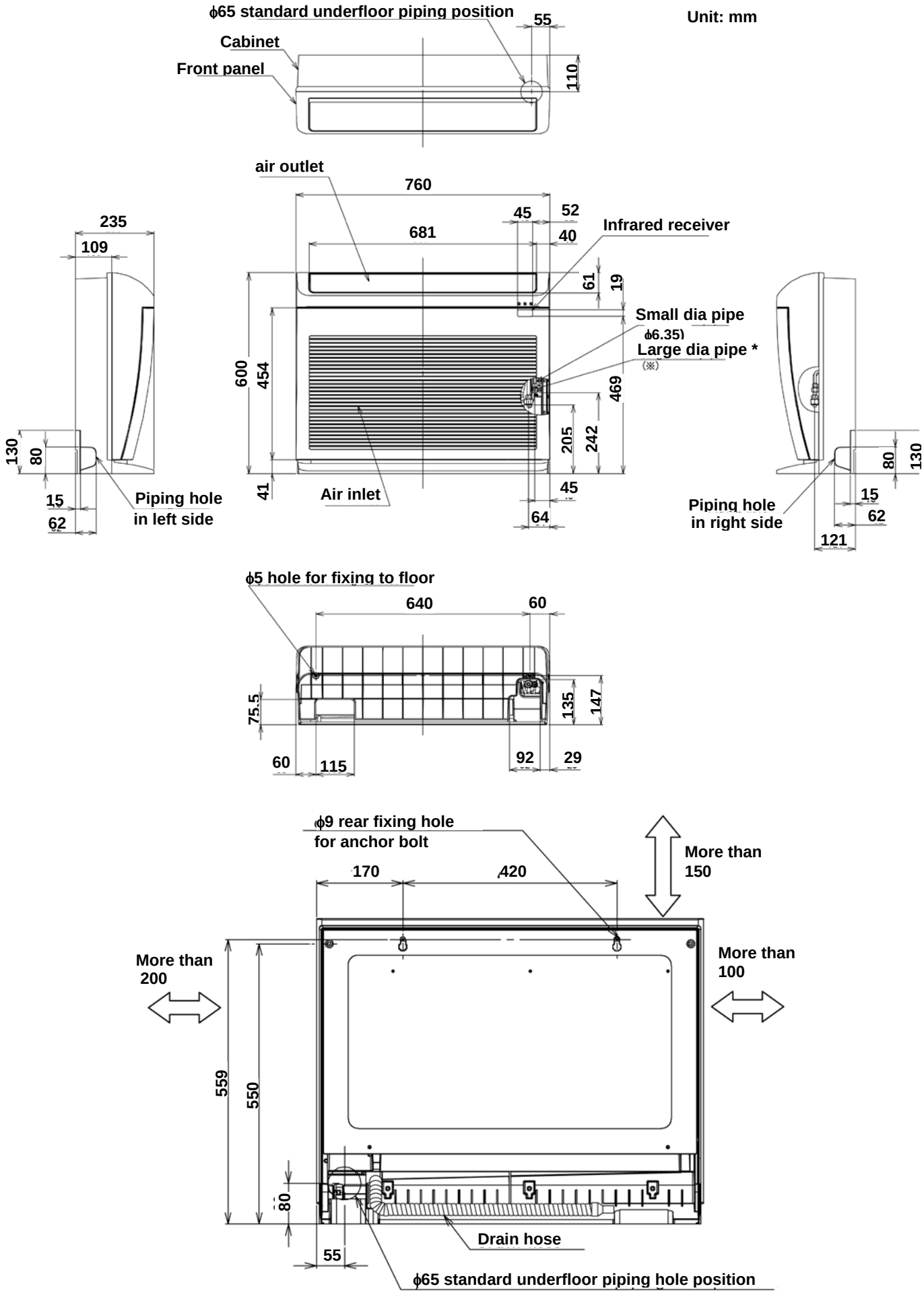

3.3.25. FLOOR TYPE: RAC-25FPA/35FPA

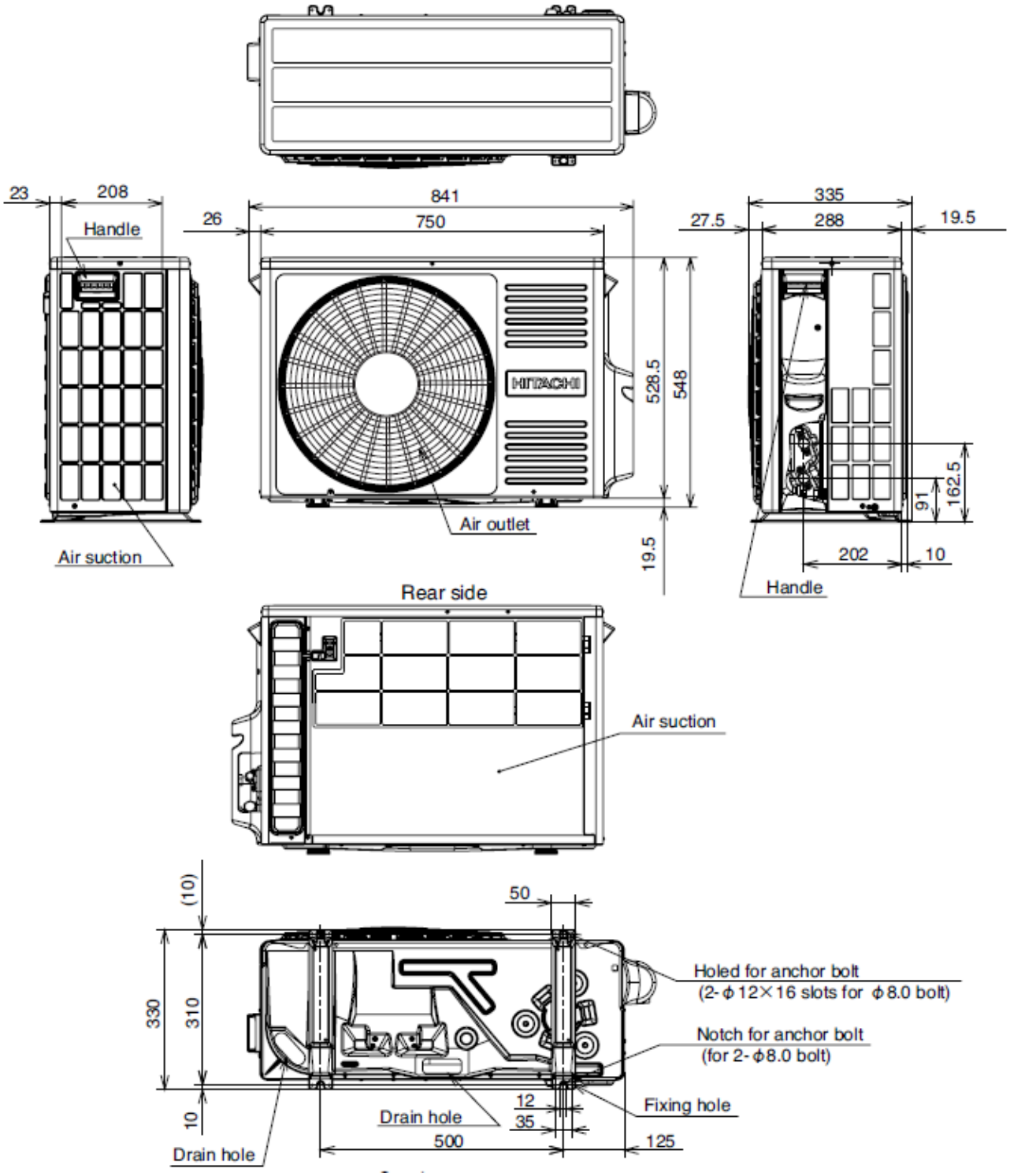

3.3.26. FLOOR TYPE: RAC-50FPA

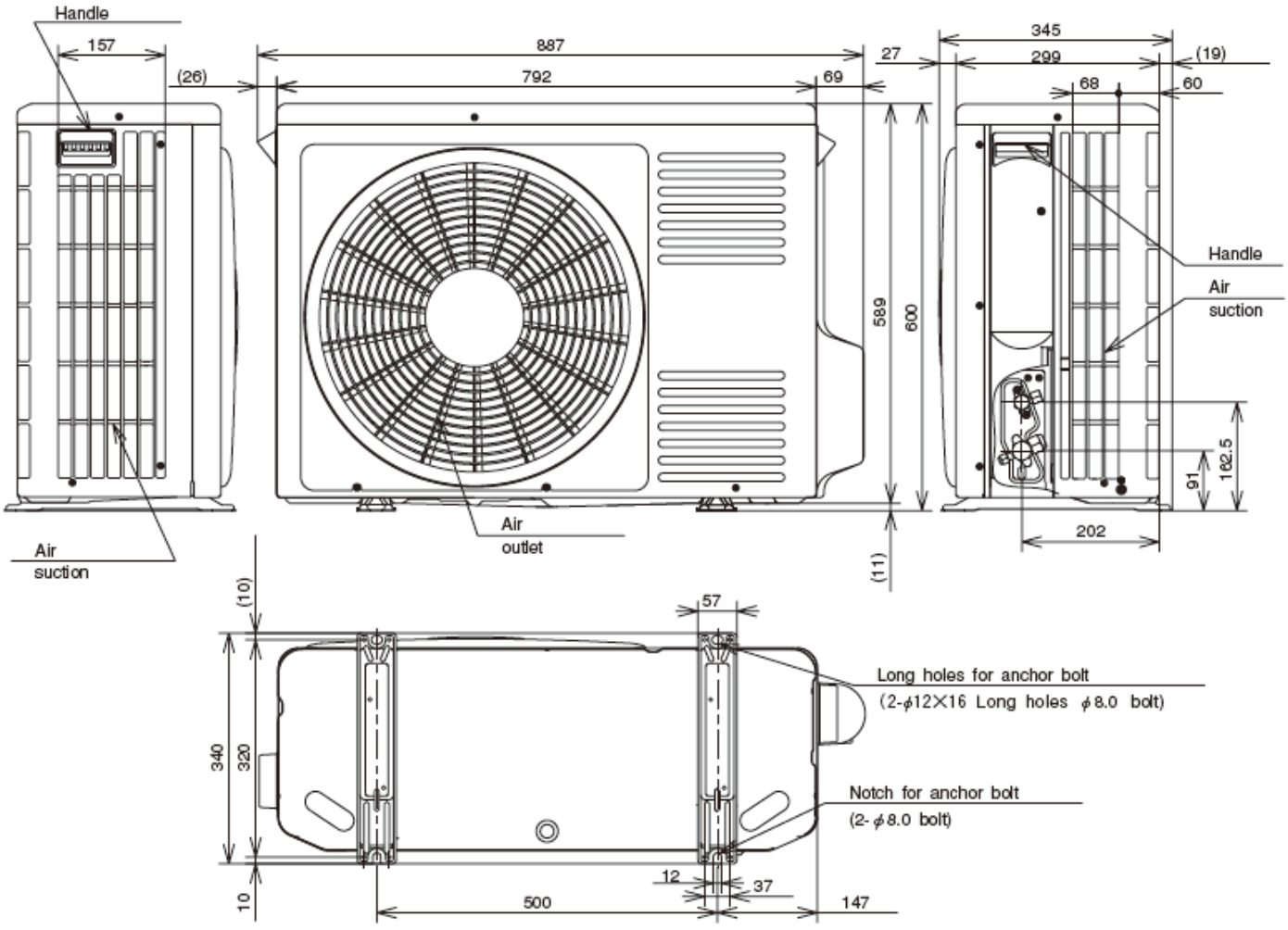

3.3.27. DUCT TYPE: RAD-50PPA/60PPA/70PPA

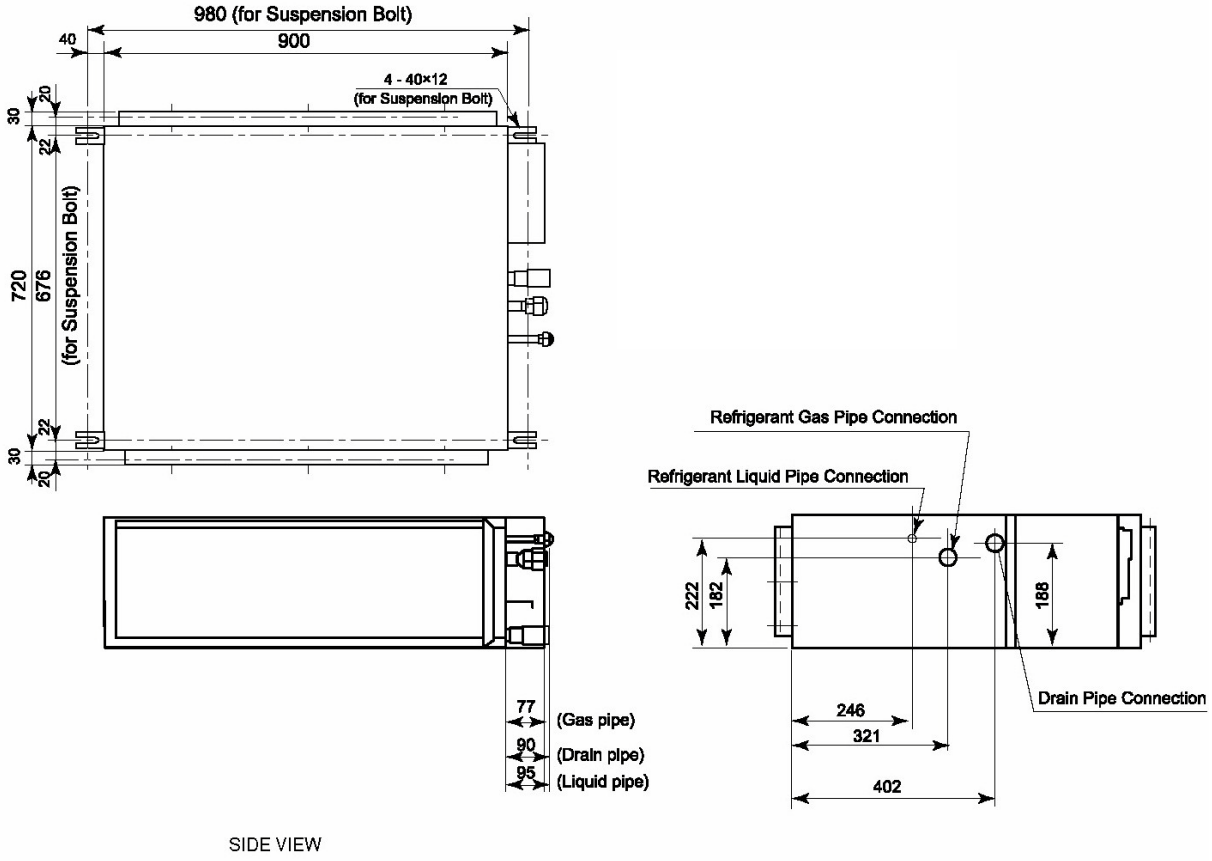

SIDE VIEW

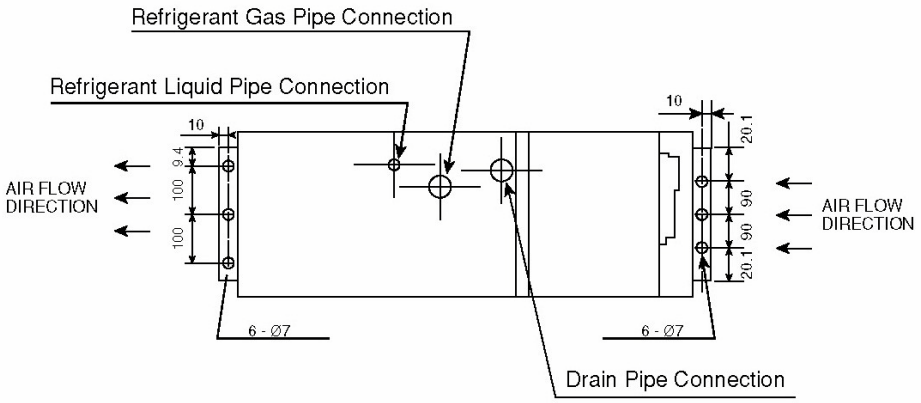

TOP VIEW

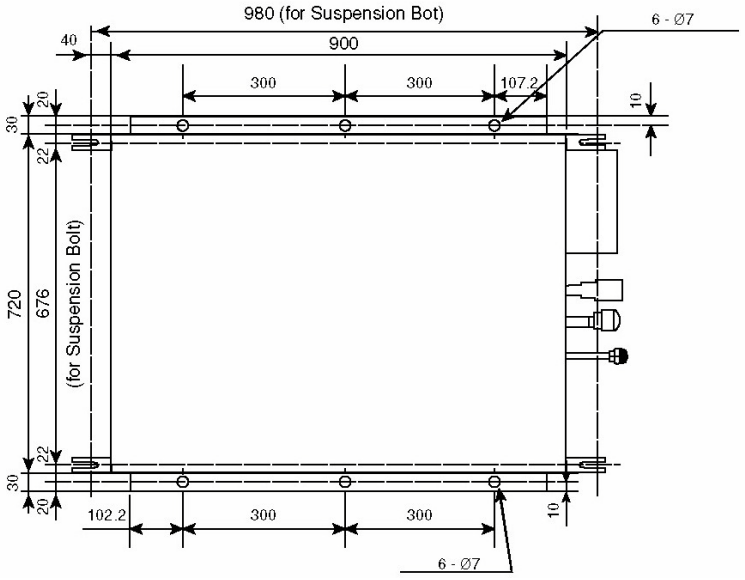

3.3.28. DUCT TYPE: RAC-50DPA/60DPA/70DPA

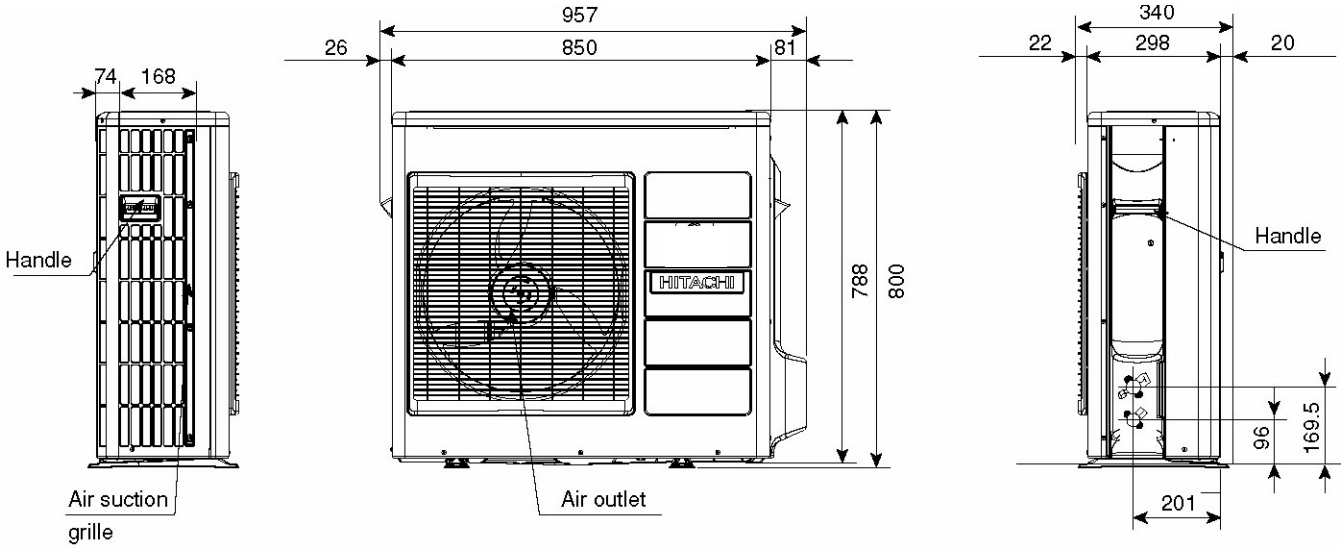

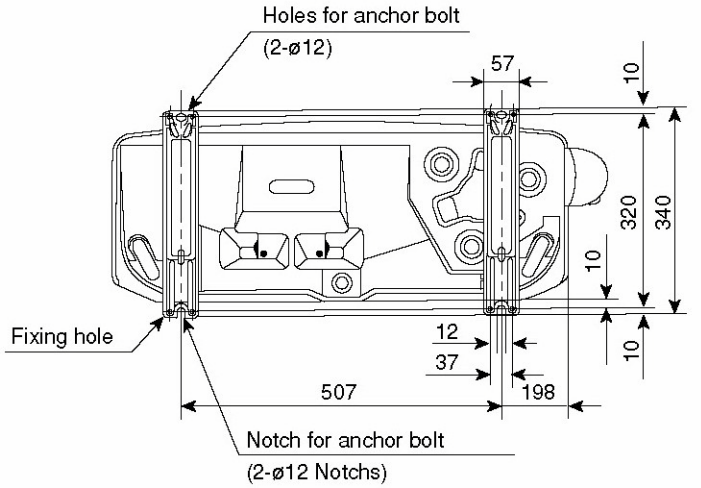

4 CAPACITIES AND SELECTION DATA

CONTENTS

4 CAPACITIES AND SELECTION DATA 4-1

4.1. SYSTEM SELECTION PROCEDURE 4-3

4.1.1. Selection Unit Features 4-3
4.1.2. Selection Guide 4-3
4.1.3. MONOZONE / MULTIZONE COMBINATION TABLE 4-4

4.2. CAPACITY CHARACTERISTIC CURVES FOR MONOZONE/MULTIZONE 4-9

4.2.1. RAI-25RPA/RAC-25NPA 4-9
4.2.2. RAI-35RPA/RAC-35NPA 4-10
4.2.3. RAI-50RPA/RAC-50NPA 4-10
4.2.4. RAD-25RPA/RAC-25NPA 4-11
4.2.5. RAD-35RPA/RAC-35NPA 4-12
4.2.6. RAD-50RPA/RAC-50NPA 4-12
4.2.7. RAM-36NP2A 4-13
4.2.8. RAM-53NP2A 4-17
4.2.9. RAM-53NP3A 4-23
4.2.10. RAM-68NP3A 4-30
4.2.11. RAM-70NP4A 4-37
4.2.12. RAM-90NP5A 4-65
4.2.13. RAM-130NP6A 4-138

4.3. Capacity Characteristic Curves For MONO - SPLIT 4-273

4.3.1. RAK-25PXA/RAC-25WXA 4-273
4.3.2. RAK-35PXA/RAC-35WXA 4-273
4.3.3. RAK-50PXA/RAC-50WXA 4-274
4.3.4. RAF-25RPA/RAC-25FPA 4-275
4.3.5. RAF-35RPA/RAC-35FPA 4-275
4.3.6. RAF-50RPA/RAC-50FPA 4-276
4.3.7. RAK-18PSA/RAC-18WSA 4-276
4.3.8. RAK-25PSA/RAC-25WSA 4-277
4.3.9. RAK-35PSA/RAC-35WSA 4-277
4.3.10. RAK-18PPA/RAC-18WPA 4-278
4.3.11. RAK-25PPA/RAC-25WPA 4-278
4.3.12. RAK-35PPA/RAC-35WPA 4-279
4.3.13. RAK-50PPA/RAC-50WPA 4-279
4.3.14. RAK-60PPA/RAC-60WPA 4-280
4.3.15. RAK-70PPA/RAC-70WPA 4-280
4.3.16. RAD-50PPA/RAC-50DPA 4-281
4.3.17. RAD-60PPA/RAC-60DPA 4-281
4.3.18. RAD-70PPA/RAC-70DPA 4-282
4.3.19. RAK-18PEA/RAC-18WEA 4-282
4.3.20. RAK-25PEA/RAC-25WEA 4-283
4.3.21. RAK-35PEA/RAC-35WEA 4-283
4.3.22. RAK-50PEA/RAC-50WEA 4-284
4.3.23. RAK-18PSAN/RAC-18WSAN 4-284
4.3.24. RAK-25PSAN/RAC-25WSAN 4-285
4.3.25. RAK-35PSAN/RAC-35WSAN 4-285
4.3.26. RAK-18PSPA/RAC-18WSPA 4-285
4.3.27. RAK-25PSPA/RAC-25WSPA 4-286
4.3.28. RAK-35PSPA/RAC-35WSPA 4-287
4.3.29. RAF-25PXA/RAC-25FXA 4-287
4.3.30. RAF-35PXA/RAC-35FXA 4-288
4.3.31. RAF-50PXA/RAC-50FXA 4-288

4.4. Correction Factors According to Piping Length 4-289

4.5. Correction Factors According to Defrosting Operation 4-295

4.6. Combination Table For MONOZONE Outdoor 4-296

4.6.1. RAC-25/35/50/65NPA 4-296

Combination Table For MULTIZONE Outdoor 4-297

4.6.2. RAM-35NP2A 4-297
4.6.3. RAM-53NP2A 4-299
4.6.4. RAM-53NP3A 4-301
4.6.5. RAM-68NP3A 4-304
4.6.6. RAM-70NP4A 4-307

4.6.7. RAM-90NP5A 4-312
4.6.8. RAM-130NP6A 4-324
4.7. Sound Data 4-344
4.7.1. RAC-25NPA 4-344
4.7.2. RAC-35NPA 4-344
4.7.3. RAC-50NPA 4-345
4.7.4. RAC-18WSA 4-346
4.7.5. RAC-25WSA 4-347
4.7.6. RAC-35WSA 4-348
4.7.7. RAC-25WXA 4-349
4.7.8. RAC-35WXA 4-350
4.7.9. RAC-50WXA 4-351
4.7.10. RAC-25FXA 4-352
4.7.11. RAC-35FXA 4-353
4.7.12. RAC-50FXA 4-354
4.7.13. RAC-25FPA 4-355
4.7.14. RAC-35FPA 4-356
4.7.15. RAC-50FPA 4-357
4.7.16. RAC-18WPA 4-358
4.7.17. RAC-25WPA 4-359
4.7.18. RAC-35WPA 4-360
4.7.19. RAC-50WPA 4-361
4.7.20. RAC-60WPA 4-362
4.7.21. RAC-70WPA 4-363
4.7.22. RAC-50DPA 4-364
4.7.23. RAC-60DPA 4-365
4.7.24. RAC-70DPA 4-366
4.7.25. RAM-35NP2A 4-367
4.7.26. RAM-53NP2A / RAM-53NP3A 4-368
4.7.27. RAM-68NP3A 4-368
4.7.28. RAM-70NP4A 4-369
4.7.29. RAM-90NP5A 4-369
4.7.30. RAM-130NP6A 4-370

4.1. SYSTEM SELECTION PROCEDURE

The following system procedure is giving a sample regarding unit selection system, indicating how to use all parameters showed in this chapter.

4.1.1. SELECTION UNIT FEATURES

Considering the building distribution, the possible indoor unit position and the available air flow distribution, select the unit features that are giving the best efficiency and comfort to each room.
Decide the Outdoor Unit position getting easy service maintenance and easy refrigerant pipe installation.

Therefore, the maximum indoor unit capacity combined with outdoor unit should be carefully considered for correct indoor unit distribution at each building

4.1.2. SELECTION GUIDE

The following guide giving the method for indoor and outdoor unit selection.

* **Step 1: Determine the system requirements**

Calculate the cooling capacity and heating capacity of each indoor unit according to the following conditions:

Total Load for each room

		Room			
Item		**1**	**2**	**3**	**1+2+3**
Estimated Cooling Load	kW	2.75	4.24	5.35	12.34
Estimated Heating Load	kW	2.90	4.60	6.00	13.50

*Example

Temperature Condition

Cooling	Heating
Outdoor Air Inlet • Dry Bulb: 35.0ºC	Outdoor Air Inlet • Dry Bulb: 7ºC • Wet Bulb: 0ºC
Indoor Air Inlet • Dry Bulb: 27,0ºC • Wet Bulb: 19.5ºC	Indoor Air Inlet • Dry Bulb: 20ºC

*Example

* **Step 2**: **Select Unit Capacity Performance**

The unit kW is selected following the Cooling capacity and Heating capacity showed in the combination table.

* **Step 3**: **Read Selected Capacity Performance**

The unit performance should be calculated considering the following correction factors:
1. Cooling and Heating piping length
2. Outdoor unit performance capacity
3. Indoor unit performance capacity for each room cooling load

Kindly refer to the unit selection combination table for correct capacity performance.

4.1.3. MONOZONE / MULTIZONE COMBINATION TABLE

Type								Dual	Dual	Triple	Triple	Quad	Pentad	Hexad
Model Name								RAM-36NP2A	RAM-53NP2A	RAM-53NP3A	RAM-68NP3A	RAM-70NP4A	RAM-90NP5A	RAM-130NP6A
Product Image														
Combination							Total							
ONE UNIT	1.2						1.2							
	1.8						1.8							
	2.5						2.5							
	3.5						3.5							
	5.0						5.0							
	6.0						6.0							
TWO UNITS	1.2	1.2					2.4	★	★			★	★	
	1.2	1.8					3.0	★	★			★	★	
	1.2	2.5					3.7	★	★			★	★	
	1.2	3.5					4.7	★	★			★	★	
	1.2	5.0					6.2		★			★	★	
	1.8	1.8					3.6	★	★	★	★	★	★	
	1.8	2.5					4.3	★	★	★	★	★	★	
	1.8	3.5					5.3	★	★	★	★	★	★	
	1.8	5.0					6.8		★	★	★	★	★	
	1.8	6.0					7.8					★	★	
	2.5	2.5					5.0	★	★	★	★	★	★	
	2.5	3.5					6.0	★	★	★	★	★	★	
	2.5	5.0					7.5		★	★	★	★	★	
	2.5	6.0					8.5					★	★	
	3.5	3.5					7.0		★	★	★	★	★	
	3.5	5.0					8.5		★	★	★	★	★	
	3.5	6.0					9.5					★	★	
	5.0	5.0					10.0					★	★	
	5.0	6.0					11.0					★	★	
	6.0	6.0					12.0						★	
THREE UNITS	1.2	1.2	1.2				3.6			★	★	★	★	
	1.2	1.2	1.8				4.2			★	★	★	★	
	1.2	1.2	2.5				4.9			★	★	★	★	
	1.2	1.2	3.5				5.9			★	★	★	★	
	1.2	1.2	5.0				7.4			★	★	★	★	
	1.2	1.8	1.8				4.8			★	★	★	★	
	1.2	1.8	2.5				5.5			★	★	★	★	
	1.2	1.8	3.5				6.5			★	★	★	★	

Type								Dual	Dual	Triple	Triple	Quad	Pentad	Hexad
Model Name								RAM-36NP2A	RAM-53NP2A	RAM-53NP3A	RAM-68NP3A	RAM-70NP4A	RAM-90NP5A	RAM-130NP6A
Product Image														
Combination							Total							
THREE UNITS	1.2	1.8	5.0				8.0			★	★	★	★	
	1.2	2.5	2.5				6.2			★	★	★	★	
	1.2	2.5	3.5				7.2			★	★	★	★	
	1.2	3.5	3.5				8.2			★	★	★	★	
	1.8	1.8	1.8				5.4			★	★	★	★	
	1.8	1.8	2.5				6.1			★	★	★	★	
	1.8	1.8	3.5				7.1			★	★	★	★	
	1.8	1.8	5.0				8.6			★	★	★	★	
	1.8	1.8	6.0				9.6				★	★	★	
	1.8	2.5	2.5				6.8			★	★	★	★	
	1.8	2.5	3.5				7.8			★	★	★	★	
	1.8	2.5	5.0				9.3				★	★	★	
	1.8	2.5	6.0				10.3					★	★	
	1.8	3.5	3.5				8.8			★	★	★	★	
	1.8	3.5	5.0				10.3					★	★	
	1.8	3.5	6.0				11.3						★	
	1.8	5.0	5.0				11.8						★	
	1.8	5.0	6.0				12.8						★	
	1.8	6.0	6.0				13.8						★	
	2.5	2.5	2.5				7.5			★	★	★	★	
	2.5	2.5	3.5				8.5			★	★	★	★	
	2.5	2.5	5.0				10.0					★	★	
	2.5	2.5	6.0				11.0					★	★	
	2.5	3.5	3.5				9.5				★	★	★	
	2.5	3.5	5.0				11.0					★	★	
	2.5	3.5	6.0				12.0						★	
	2.5	5.0	5.0				12.5						★	
	2.5	5.0	6.0				13.5						★	
	2.5	6.0	6.0				14.5						★	
	3.5	3.5	3.5				10.5					★	★	
	3.5	3.5	5.0				12.0						★	
	3.5	3.5	6.0				13.0						★	
	3.5	5.0	5.0				13.5						★	
	3.5	5.0	6.0				14.5						★	
	3.5	6.0	6.0				15.5						★	
	5.0	5.0	5.0				15.0						★	

Type								Dual	Dual	Triple	Triple	Quad	Pentad	Hexad
Model Name								RAM-36NP2A	RAM-53NP2A	RAM-53NP3A	RAM-68NP3A	RAM-70NP4A	RAM-90NP5A	RAM-130NP6A
Product Image														
Combination							Total							
FOUR UNITS	1.8	1.8	1.8	1.8			7.2					★	★	★
	1.8	1.8	1.8	2.5			7.9					★	★	★
	1.8	1.8	1.8	3.5			8.9					★	★	★
	1.8	1.8	1.8	5.0			10.4					★	★	★
	1.8	1.8	1.8	6.0			11.4						★	
	1.8	1.8	2.5	2.5			8.6					★	★	★
	1.8	1.8	2.5	3.5			9.6					★	★	★
	1.8	1.8	2.5	5.0			11.1						★	★
	1.8	1.8	2.5	6.0			12.1						★	
	1.8	1.8	3.5	3.5			10.6					★	★	★
	1.8	1.8	3.5	6.0			13.1						★	
	1.8	1.8	5.0	5.0			13.6						★	★
	1.8	1.8	5.0	6.0			14.6						★	
	1.8	2.5	2.5	2.5			9.3					★	★	★
	1.8	2.5	2.5	3.5			10.3					★	★	★
	1.8	2.5	2.5	5.0			11.8						★	★
	1.8	2.5	2.5	6.0			12.8						★	
	1.8	2.5	3.5	3.5			11.3							★
	1.8	2.5	3.5	5.0			12.8						★	★
	1.8	2.5	3.5	6.0			13.8						★	
	1.8	2.5	5.0	5.0			14.3						★	★
	1.8	2.5	5.0	6.0			15.3						★	
	1.8	3.5	3.5	5.0			13.8						★	★
	1.8	3.5	3.5	6.0			14.8						★	
	1.8	3.5	5.0	5.0			15.3						★	★
	2.5	2.5	2.5	2.5			10.0					★	★	★
	2.5	2.5	2.5	3.5			11.0					★	★	★
	2.5	2.5	2.5	5.0			12.5						★	★
	2.5	2.5	2.5	6.0			13.5						★	
	2.5	2.5	3.5	3.5			12.0						★	★
	2.5	2.5	3.5	5.0			13.5						★	★
	2.5	2.5	3.5	6.0			14.5						★	
	2.5	2.5	5.0	5.0			15.0						★	★
	2.5	3.5	3.5	3.5			13.0						★	★
	2.5	3.5	3.5	5.0			14.5						★	★
	2.5	3.5	3.5	6.0			15.5						★	
	3.5	3.5	3.5	3.5			14.0						★	★
	3.5	3.5	3.5	5.0			15.5						★	★
	3.5	3.5	5.0	5.0			17.0							★

Type								Dual	Dual	Triple	Triple	Quad	Pentad	Hexad
Model Name								RAM-36NP2A	RAM-53NP2A	RAM-53NP3A	RAM-68NP3A	RAM-70NP4A	RAM-90NP5A	RAM-130NP6A
Product Image														
Combination							Total							
FIVE UNITS	1.8	1.8	1.8	1.8	1.8		9.0						★	★
	1.8	1.8	1.8	1.8	2.5		9.7						★	★
	1.8	1.8	1.8	1.8	3.5		10.7						★	★
	1.8	1.8	1.8	1.8	5.0		12.2						★	★
	1.8	1.8	1.8	1.8	6.0		13.2						★	
	1.8	1.8	1.8	2.5	2.5		10.4						★	★
	1.8	1.8	1.8	2.5	3.5		11.4						★	★
	1.8	1.8	1.8	2.5	5.0		12.9						★	★
	1.8	1.8	1.8	2.5	6.0		13.9						★	
	1.8	1.8	1.8	3.5	3.5		12.4						★	★
	1.8	1.8	1.8	3.5	5.0		13.9						★	★
	1.8	1.8	1.8	3.5	6.0		14.9						★	
	1.8	1.8	1.8	5.0	5.0		15.4						★	★
	1.8	1.8	2.5	2.5	2.5		11.1						★	★
	1.8	1.8	2.5	2.5	3.5		12.1						★	★
	1.8	1.8	2.5	2.5	5.0		13.6						★	★
	1.8	1.8	2.5	2.5	6.0		14.6						★	
	1.8	1.8	2.5	3.5	3.5		13.1						★	★
	1.8	1.8	2.5	3.5	5.0		14.6						★	★
	1.8	1.8	3.5	3.5	3.5		14.1						★	★
	1.8	2.5	2.5	2.5	2.5		11.8						★	★
	1.8	2.5	2.5	2.5	3.5		12.8						★	★
	1.8	2.5	2.5	2.5	5.0		14.3						★	★
	1.8	2.5	2.5	2.5	6.0		15.3						★	
	1.8	2.5	2.5	3.5	3.5		13.8						★	★
	1.8	2.5	2.5	3.5	5.0		15.3						★	★
	1.8	2.5	3.5	3.5	3.5		14.8						★	★
	1.8	3.5	3.5	3.5	3.5		15.8							★
	2.5	2.5	2.5	2.5	2.5		12.5						★	★
	2.5	2.5	2.5	2.5	3.5		13.5						★	★
	2.5	2.5	2.5	2.5	5.0		15.0						★	★
	2.5	2.5	2.5	3.5	3.5		14.5						★	★
	2.5	2.5	2.5	3.5	5.0		16.0							★
	2.5	2.5	3.5	3.5	3.5		15.5						★	★
	2.5	2.5	3.5	3.5	5.0		17.0							★

Type								Dual	Dual	Triple	Triple	Quad	Pentad	Hexad
Model Name								RAM-36NP2A	RAM-53NP2A	RAM-53NP3A	RAM-68NP3A	RAM-70NP4A	RAM-90NP5A	RAM-130NP6A
Product Image														
Combination							Total							
SIX UNITS	1.8	1.8	1.8	1.8	1.8	1.8	10.8							★
	1.8	1.8	1.8	1.8	1.8	2.5	11.5							★
	1.8	1.8	1.8	1.8	1.8	3.5	12.5							★
	1.8	1.8	1.8	1.8	1.8	5.0	14.0							★
	1.8	1.8	1.8	1.8	2.5	2.5	12.2							★
	1.8	1.8	1.8	1.8	2.5	3.5	13.2							★
	1.8	1.8	1.8	1.8	2.5	5.0	14.7							★
	1.8	1.8	1.8	1.8	3.5	3.5	14.2							★
	1.8	1.8	1.8	1.8	3.5	5.0	15.7							★
	1.8	1.8	1.8	1.8	5.0	5.0	17.2							★
	1.8	1.8	1.8	2.5	2.5	2.5	12.9							★
	1.8	1.8	1.8	2.5	2.5	3.5	13.9							★
	1.8	1.8	1.8	2.5	2.5	5.0	15.4							★
	1.8	1.8	1.8	2.5	3.5	3.5	14.9							★
	1.8	1.8	1.8	2.5	3.5	5.0	16.4							★
	1.8	1.8	1.8	3.5	3.5	3.5	15.9							★
	1.8	1.8	1.8	3.5	3.5	5.0	17.4							★
	1.8	1.8	2.5	2.5	2.5	2.5	13.6							★
	1.8	1.8	2.5	2.5	2.5	3.5	14.6							★
	1.8	1.8	2.5	2.5	2.5	5.0	16.1							★
	1.8	1.8	2.5	2.5	3.5	3.5	15.6							★
	1.8	1.8	2.5	2.5	3.5	5.0	17.1							★
	1.8	1.8	2.5	3.5	3.5	3.5	16.6							★
	1.8	1.8	3.5	3.5	3.5	3.5	17.6							★
	1.8	2.5	2.5	2.5	2.5	2.5	14.3							★
	1.8	2.5	2.5	2.5	2.5	3.5	15.3							★
	1.8	2.5	2.5	2.5	3.5	3.5	16.3							★
	1.8	2.5	2.5	3.5	3.5	3.5	17.3							★
	2.5	2.5	2.5	2.5	2.5	2.5	15.0							★
	2.5	2.5	2.5	2.5	2.5	3.5	16.0							★
	2.5	2.5	2.5	2.5	3.5	3.5	17.0							★
MAX TOTAL COMBINATION CAPACITY								**6.0**	**8.5**	**8.8**	**8.8**	**11.0**	**15.5**	**17.6**

***At least 2 indoor should be connected at least for RAM-35/52/53/65/71/90QH5**
***At least 4 indoor should be connected for RAM-130QH5**

4.2. CAPACITY CHARACTERISTIC CURVES FOR MONOZONE/MULTIZONE

The following charts show the characteristics of outdoor unit capacity, which corresponds with the operating ambient temperature of outdoor unit.

Conditions:

①Pipe length / height difference : 7.5m / 0m
②Indoor fan speed at High mode
③Compressor at rated inverter frequency
④Capacity loss due to white frost and defrost operation is not included.

4.2.1. RAI-25RPA/RAC-25NPA

COOLING [50Hz, 230V]

INDOOR		OUTDOOR TEMPERATURE (°CDB)																				
EWB	EDB	-10			21			27			32			35			40			43		
°C	°C	TC	SHC	PI	TC	SHC	PI	TC	SHC	PI	TC	SHC	PI	TC	SHC	PI	TC	SHC	PI	TC	SHC	PI
12.0	18	2649	1991	528	2200	1947	460	2036	1797	542	2050	1820	639	1975	1740	667	1850	1640	716	1775	1560	744
14.0	20	2649	1991	528	2364	1947	460	2200	1816	548	2200	1820	646	2125	1760	674	1975	1640	723	1900	1580	758
16.0	22	2649	2119	536	2528	1947	466	2340	1816	555	2350	1820	653	2275	1760	688	2125	1640	737	2050	1580	765
18.0	25	2840	2272	545	2691	2116	472	2481	1966	561	2500	1980	660	2400	1900	688	2250	1780	744	2150	1700	771
19.0	27	2936	2349	553	2785	2228	478	2574	2060	567	2600	2080	667	2500	2000	695	2350	1880	744	2250	1800	771
22.0	30	3255	2323	553	3089	2209	478	2855	2041	567	2875	2060	674	2775	1980	702	2500	1920	771	2325	1880	813
24.0	32	3479	2323	561	3300	2209	484	3043	2041	574	3075	2060	674	2950	1980	709	2600	1960	792	2375	1940	841

HEATING [50Hz, 230V]

INDOOR		OUTDOOR TEMPERATURE (°CDB)																				
	EDB	-15			-10			-7			-5			0			7			10			15		
	°C	TC	SHC	PI	TC	SHC	PI	TC	SHC	PI	TC	SHC	PI	TC	SHC	PI	TC	SHC	PI	TC	SHC	PI	TC	SHC	PI
	16	1260	0	696	1995	0	714	2275	0	745	2461	0	765	2996	0	856	3539	0	868	3861	0	891	4456	0	935
	18	1243	0	705	1978	0	724	2253	0	761	2436	0	785	2965	0	878	3521	0	912	3847	0	931	4438	0	979
	20	1225	0	714	1960	0	733	2233	0	773	2415	0	799	2940	0	893	3500	0	940	3763	0	973	4410	0	1025
	22	1208	0	724	1943	0	743	2205	0	789	2380	0	820	2909	0	915	3479	0	978	3805	0	1009	4389	0	1067
	24	1190	0	733	1925	0	752	2185	0	804	2359	0	839	2884	0	936	3458	0	1015	3784	0	1047	4326	0	1110

EWB : Evaporator Wet Bulb temperature (°C)
EDB : Evaporator Dry Bulb temperature (°C)
(°CDB) : Outdoor Unit Inlet Air Dry Temperature (°C)

TC : Total Capacity (W)
SHC : Sensible Heating Capacity (W)
PI : Power Input

4.2.2. RAI-35RPA/RAC-35NPA

COOLING [50Hz, 230V]

INDOOR		OUTDOOR TEMPERATURE (°CDB)																				
EWB	EDB	-10			21			27			32			35			40			43		
°C	°C	TC	SHC	PI	TC	SHC	PI	TC	SHC	PI	TC	SHC	PI	TC	SHC	PI	TC	SHC	PI	TC	SHC	PI
12.0	18	2455	1912	553	2595	2379	613	2402	2196	723	2870	2639	1012	2765	2523	1056	2590	2378	1133	2485	2262	1177
14.0	20	2455	1912	553	2788	2379	613	2595	2219	731	3080	2639	1023	2975	2552	1067	2765	2378	1144	2660	2291	1199
16.0	22	2455	2034	562	2981	2379	621	2761	2219	740	3290	2639	1034	3185	2552	1089	2975	2378	1166	2870	2291	1210
18.0	25	2632	2181	571	3175	2585	629	2926	2402	748	3500	2871	1045	3360	2755	1089	3150	2581	1177	3010	2465	1221
19.0	27	2721	2255	579	3285	2722	637	3037	2516	757	3640	3016	1056	3500	2900	1100	3290	2726	1177	3150	2610	1221
22.0	30	3017	2230	579	3644	2699	637	3368	2493	757	4025	2987	1067	3885	2871	1111	3500	2784	1221	3255	2726	1287
24.0	32	3224	2230	588	3892	2699	645	3589	2493	765	4305	2987	1067	4130	2871	1122	3640	2842	1254	3325	2813	1331

HEATING [50Hz, 230V]

INDOOR		OUTDOOR TEMPERATURE (°CDB)																				
	EDB	-15			-10			-7			-5			0			7			10			15		
	°C	TC	SHC	PI	TC	SHC	PI	TC	SHC	PI	TC	SHC	PI	TC	SHC	PI	TC	SHC	PI	TC	SHC	PI	TC	SHC	PI
	16	1728	0	977	2736	0	1003	3119	0	1046	3374	0	1074	4109	0	1203	4853	0	1218	5294	0	1251	6110	0	1313
	18	1704	0	990	2712	0	1016	3089	0	1068	3341	0	1102	4066	0	1233	4829	0	1280	5275	0	1307	6086	0	1375
	20	1680	0	1003	2688	0	1030	3062	0	1085	3312	0	1122	4032	0	1254	4800	0	1320	5160	0	1366	6048	0	1439
	22	1656	0	1016	2664	0	1043	3024	0	1108	3264	0	1151	3989	0	1284	4771	0	1373	5218	0	1416	6019	0	1498
	24	1632	0	1030	2640	0	1056	2997	0	1130	3235	0	1179	3955	0	1315	4742	0	1426	5189	0	1470	5933	0	1559

4.2.3. RAI-50RPA/RAC-50NPA

COOLING [50Hz, 230V]

INDOOR		OUTDOOR TEMPERATURE (°CDB)																				
EWB	EDB	-10			21			27			32			35			40			43		
°C	°C	TC	SHC	PI	TC	SHC	PI	TC	SHC	PI	TC	SHC	PI	TC	SHC	PI	TC	SHC	PI	TC	SHC	PI
12.0	18	2371	1671	677	2979	2472	892	2758	2282	1051	4100	3413	1831	3950	3263	1910	3700	3075	2050	3550	2925	2129
14.0	20	2371	1671	677	3201	2472	892	2979	2306	1063	4400	3413	1851	4250	3300	1930	3950	3075	2070	3800	2963	2169
16.0	22	2371	1779	687	3423	2472	903	3170	2306	1076	4700	3413	1871	4550	3300	1970	4250	3075	2109	4100	2963	2189
18.0	25	2543	1907	698	3645	2686	915	3360	2496	1088	5000	3713	1891	4800	3563	1970	4500	3338	2129	4300	3188	2209
19.0	27	2629	1971	709	3772	2829	927	3487	2615	1100	5200	3900	1910	5000	3750	1990	4700	3525	2129	4500	3375	2209
22.0	30	2914	1950	709	4184	2805	927	3867	2591	1100	5750	3863	1930	5550	3713	2010	5000	3600	2209	4650	3525	2328
24.0	32	3114	1950	719	4469	2805	939	4121	2591	1113	6150	3863	1930	5900	3713	2030	5200	3675	2269	4750	3638	2408

EWB : Evaporator Wet Bulb temperature (°C)
EDB : Evaporator Dry Bulb temperature (°C)
(°CDB) : Outdoor Unit Inlet Air Dry Temperature (°C)

TC : Total Capacity (W)
SHC : Sensible Heating Capacity (W)
PI : Power Input

HEATING [50Hz, 230V]

INDOOR	OUTDOOR TEMPERATURE (°CDB)																							
EDB	-15			-10			-7			-5			0			7			10			15		
°C	TC	SHC	PI	TC	SHC	PI	TC	SHC	PI	TC	SHC	PI	TC	SHC	PI	TC	SHC	PI	TC	SHC	PI	TC	SHC	PI
16	2340	0	1598	3705	0	1642	4224	0	1712	4570	0	1758	5564	0	1968	6572	0	1994	7170	0	2048	8275	0	2149
18	2308	0	1620	3673	0	1663	4184	0	1748	4524	0	1804	5506	0	2017	6539	0	2095	7144	0	2138	8242	0	2251
20	2275	0	1642	3640	0	1685	4147	0	1776	4485	0	1836	5460	0	2052	6500	0	2160	6988	0	2236	8190	0	2354
22	2243	0	1663	3608	0	1706	4095	0	1813	4420	0	1884	5402	0	2102	6461	0	2246	7066	0	2318	8151	0	2452
24	2210	0	1685	3575	0	1728	4059	0	1849	4381	0	1929	5356	0	2151	6422	0	2333	7027	0	2406	8034	0	2551

4.2.4. RAD-25RPA/RAC-25NPA

COOLING [50Hz, 230V]

INDOOR		OUTDOOR TEMPERATURE (°CDB)																					
EWB	EDB	-10			21			27			32			35			40			43			
°C	°C	TC	SHC	PI	TC	SHC	PI	TC	SHC	PI	TC	SHC	PI	TC	SHC	PI	TC	SHC	PI	TC	SHC	PI	
12.0	18	2541	1910	507	2110	1868	441	1953	1724	520	2050	1820	639	1975	1740	667	1850	1640	716	1775	1560	744	
14.0	20	2541	1910	507	2267	1868	441	2110	1742	526	2200	1820	646	2125	1760	674	1975	1640	723	1900	1580	758	
16.0	22	2541	2033	514	2424	1868	447	2245	1742	532	2350	1820	653	2275	1760	688	2125	1640	737	2050	1580	765	
18.0	25	2724	2180	522	2582	2029	453	2380	1886	538	2500	1980	660	2400	1900	688	2250	1780	744	2150	1700	771	
19.0	27	2816	2253	530	2671	2137	459	2469	1976	544	2600	2080	667	2500	2000	695	2350	1880	744	2250	1800	771	
22.0	30	3122	2229	530	2963	2119	459	2739	1958	544	2875	2060	674	2775	1980	702	2500	1920	771	2325	1880	813	
24.0	32	3337	2229	538	3165	2119	464	2918	1958	550	3075	2060	674	2950	1980	709	2600	1960	792	2375	1940	841	

HEATING [50Hz, 230V]

INDOOR	OUTDOOR TEMPERATURE (°CDB)																							
EDB	-15			-10			-7			-5			0			7			10			15		
°C	TC	SHC	PI	TC	SHC	PI	TC	SHC	PI	TC	SHC	PI	TC	SHC	PI	TC	SHC	PI	TC	SHC	PI	TC	SHC	PI
16	1260	0	718	1995	0	737	2275	0	769	2461	0	790	2996	0	884	3539	0	895	3861	0	920	4456	0	965
18	1243	0	728	1978	0	747	2253	0	785	2436	0	810	2965	0	906	3521	0	941	3847	0	960	4438	0	1011
20	1225	0	737	1960	0	757	2233	0	798	2415	0	825	2940	0	922	3500	0	970	3763	0	1004	4410	0	1057
22	1208	0	747	1943	0	766	2205	0	814	2380	0	846	2909	0	944	3479	0	1009	3805	0	1041	4389	0	1101
24	1190	0	757	1925	0	776	2185	0	830	2359	0	866	2884	0	966	3458	0	1048	3784	0	1081	4326	0	1146

EWB : Evaporator Wet Bulb temperature (°C)
EDB : Evaporator Dry Bulb temperature (°C)
(°CDB) : Outdoor Unit Inlet Air Dry Temperature (°C)

TC : Total Capacity (W)
SHC : Sensible Heating Capacity (W)
PI : Power Input

4.2.5. RAD-35RPA/RAC-35NPA

COOLING [50Hz, 230V]

INDOOR		OUTDOOR TEMPERATURE (°CDB)																				
EWB	EDB	-10			21			27			32			35			40			43		
°C	°C	TC	SHC	PI	TC	SHC	PI	TC	SHC	PI	TC	SHC	PI	TC	SHC	PI	TC	SHC	PI	TC	SHC	PI
12.0	18	2179	1453	554	2879	2260	767	2664	2086	904	2870	2260	1141	2765	2160	1190	2590	2036	1277	2485	1937	1327
14.0	20	2179	1453	554	3093	2260	767	2879	2107	914	3080	2260	1153	2975	2185	1203	2765	2036	1290	2660	1962	1352
16.0	22	2179	1546	562	3308	2260	777	3063	2107	925	3290	2260	1166	3185	2185	1228	2975	2036	1314	2870	1962	1364
18.0	25	2336	1657	571	3522	2455	787	3246	2281	936	3500	2458	1178	3360	2359	1228	3150	2210	1327	3010	2111	1376
19.0	27	2415	1713	579	3644	2585	797	3369	2390	946	3640	2582	1190	3500	2483	1240	3290	2334	1327	3150	2235	1376
22.0	30	2678	1695	579	4043	2564	797	3736	2368	946	4025	2557	1203	3885	2458	1252	3500	2384	1376	3255	2334	1451
24.0	32	2861	1695	588	4318	2564	807	3981	2368	957	4305	2557	1203	4130	2458	1265	3640	2433	1414	3325	2409	1500

HEATING [50Hz, 230V]

INDOOR		OUTDOOR TEMPERATURE (°CDB)																							
	EDB	-15			-10			-7			-5			0			7			10			15		
	°C	TC	SHC	PI	TC	SHC	PI	TC	SHC	PI	TC	SHC	PI	TC	SHC	PI	TC	SHC	PI	TC	SHC	PI	TC	SHC	PI
	16	1728	0	1258	2736	0	1292	3119	0	1347	3374	0	1384	4109	0	1549	4853	0	1569	5294	0	1612	6110	0	1692
	18	1704	0	1275	2712	0	1309	3089	0	1376	3341	0	1420	4066	0	1588	4829	0	1649	5275	0	1683	6086	0	1771
	20	1680	0	1292	2688	0	1326	3062	0	1397	3312	0	1445	4032	0	1615	4800	0	1700	5160	0	1760	6048	0	1853
	22	1656	0	1309	2664	0	1343	3024	0	1426	3264	0	1482	3989	0	1654	4771	0	1768	5218	0	1824	6019	0	1930
	24	1632	0	1326	2640	0	1360	2997	0	1455	3235	0	1518	3955	0	1693	4742	0	1836	5189	0	1894	5933	0	2008

4.2.6. RAD-50RPA/RAC-50NPA

COOLING [50Hz, 230V]

INDOOR		OUTDOOR TEMPERATURE (°CDB)																				
EWB	EDB	-10			21			27			32			35			40			43		
°C	°C	TC	SHC	PI	TC	SHC	PI	TC	SHC	PI	TC	SHC	PI	TC	SHC	PI	TC	SHC	PI	TC	SHC	PI
12.0	18	2415	1702	693	2991	2482	900	2768	2291	1060	4100	3413	1840	3950	3263	1920	3700	3075	2060	3550	2925	2140
14.0	20	2415	1702	693	3214	2482	900	2991	2315	1073	4400	3413	1860	4250	3300	1940	3950	3075	2080	3800	2963	2180
16.0	22	2415	1811	703	3436	2482	911	3182	2315	1085	4700	3413	1880	4550	3300	1980	4250	3075	2120	4100	2963	2200
18.0	25	2589	1942	714	3659	2697	923	3373	2506	1098	5000	3713	1900	4800	3563	1980	4500	3338	2140	4300	3188	2220
19.0	27	2676	2007	725	3786	2840	935	3500	2625	1110	5200	3900	1920	5000	3750	2000	4700	3525	2140	4500	3375	2220
22.0	30	2967	1985	725	4200	2816	935	3882	2601	1110	5750	3863	1940	5550	3713	2020	5000	3600	2220	4650	3525	2340
24.0	32	3171	1985	736	4486	2816	947	4136	2601	1123	6150	3863	1940	5900	3713	2040	5200	3675	2280	4750	3638	2420

HEATING [50Hz, 230V]

INDOOR		OUTDOOR TEMPERATURE (°CDB)																							
	EDB	-15			-10			-7			-5			0			7			10			15		
	°C	TC	SHC	PI	TC	SHC	PI	TC	SHC	PI	TC	SHC	PI	TC	SHC	PI	TC	SHC	PI	TC	SHC	PI	TC	SHC	PI
	16	2160	0	1702	3420	0	1748	3899	0	1822	4218	0	1872	5136	0	2095	6066	0	2123	6618	0	2180	7638	0	2289
	18	2130	0	1725	3390	0	1771	3862	0	1861	4176	0	1921	5082	0	2148	6036	0	2231	6594	0	2277	7608	0	2397
	20	2100	0	1748	3360	0	1794	3828	0	1891	4140	0	1955	5040	0	2185	6000	0	2300	6450	0	2381	7560	0	2507
	22	2070	0	1771	3330	0	1817	3780	0	1930	4080	0	2006	4986	0	2238	5964	0	2392	6522	0	2468	7524	0	2611
	24	2040	0	1794	3300	0	1840	3746	0	1968	4044	0	2054	4944	0	2291	5928	0	2484	6486	0	2562	7416	0	2716

EWB : Evaporator Wet Bulb temperature (°C)
EDB : Evaporator Dry Bulb temperature (°C)
(°CDB) : Outdoor Unit Inlet Air Dry Temperature (°C)

TC : Total Capacity (W)
SHC : Sensible Heating Capacity (W)
PI : Power Input

4.2.7. RAM-36NP2A

COOLING [50Hz, 230V]

	INDOOR		OUTDOOR TEMPERATURE (°CDB)																				
	EWB	EDB	-10			21			27			32			35			40			43		
	°C	°C	TC	SHC	PI	TC	SHC	PI	TC	SHC	PI	TC	SHC	PI	TC	SHC	PI	TC	SHC	PI	TC	SHC	PI
RAM-36NP2A	12.0	18	2269	1451	438	3196	2406	648	2958	2221	763	2952	2230	892	2844	2132	931	2664	2009	999	2556	1911	1038
	14.0	20	2269	1451	438	3434	2406	648	3196	2244	772	3168	2230	902	3060	2156	941	2844	2009	1009	2736	1936	1057
	16.0	22	2269	1544	445	3672	2406	656	3400	2244	781	3384	2230	912	3276	2156	960	3060	2009	1028	2952	1936	1067
	18.0	25	2433	1656	452	3910	2615	665	3604	2430	790	3600	2426	922	3456	2328	960	3240	2181	1038	3096	2083	1077
	19.0	27	2515	1711	459	4046	2754	673	3740	2545	799	3744	2548	931	3600	2450	970	3384	2303	1038	3240	2205	1077
	22.0	30	2788	1693	459	4488	2730	673	4148	2522	799	4140	2524	941	3996	2426	980	3600	2352	1077	3348	2303	1135
	24.0	32	2979	1693	466	4794	2730	682	4420	2522	808	4428	2524	941	4248	2426	989	3744	2401	1106	3420	2377	1174
1.2	12.0	18	756	484	167	1065	802	247	986	740	291	984	743	340	948	711	355	888	670	381	852	637	396
	14.0	20	756	484	167	1145	802	247	1065	748	295	1056	743	344	1020	719	359	948	670	385	912	645	403
	16.0	22	756	515	170	1224	802	250	1133	748	298	1128	743	348	1092	719	366	1020	670	392	984	645	407
	18.0	25	811	552	172	1303	872	253	1201	810	301	1200	809	352	1152	776	366	1080	727	396	1032	694	411
	19.0	27	838	570	175	1349	918	257	1247	848	305	1248	849	355	1200	817	370	1128	768	396	1080	735	411
	22.0	30	929	564	175	1496	910	257	1383	841	305	1380	841	359	1332	809	374	1200	784	411	1116	768	433
	24.0	32	993	564	178	1598	910	260	1473	841	308	1476	841	359	1416	809	377	1248	800	422	1140	792	448
1.8	12.0	18	1134	725	253	1598	1203	374	1479	1111	763	1476	1115	515	1422	1066	538	1332	1005	577	1278	956	599
	14.0	20	1134	725	253	1717	1203	374	1598	1122	772	1584	1115	521	1530	1078	543	1422	1005	582	1368	968	610
	16.0	22	1134	772	257	1836	1203	379	1700	1122	781	1692	1115	526	1638	1078	554	1530	1005	594	1476	968	616
	18.0	25	1216	828	261	1955	1307	384	1802	1215	790	1800	1213	532	1728	1164	554	1620	1090	599	1548	1041	622
	19.0	27	1257	856	265	2023	1377	389	1870	1273	799	1872	1274	538	1800	1225	560	1692	1152	599	1620	1103	622
	22.0	30	1394	846	265	2244	1365	389	2074	1261	799	2070	1262	543	1998	1213	566	1800	1176	622	1674	1152	655
	24.0	32	1490	846	269	2397	1365	393	2210	1261	808	2214	1262	543	2124	1213	571	1872	1201	638	1710	1188	678
3.5	12.0	18	1575	1008	352	2219	1671	521	2054	1543	614	2050	1548	718	1975	1480	749	1850	1395	803	1775	1327	835
	14.0	20	1575	1008	352	2385	1671	521	2219	1559	621	2200	1548	725	2125	1497	757	1975	1395	811	1900	1344	850
	16.0	22	1575	1072	358	2550	1671	528	2361	1559	628	2350	1548	733	2275	1497	772	2125	1395	827	2050	1344	858
	18.0	25	1689	1150	364	2715	1816	534	2503	1687	635	2500	1684	741	2400	1616	772	2250	1514	835	2150	1446	866
	19.0	27	1746	1188	369	2810	1912	541	2597	1768	643	2600	1769	749	2500	1701	780	2350	1599	835	2250	1531	866
	22.0	30	1936	1176	369	3117	1896	541	2881	1751	643	2875	1752	757	2775	1684	788	2500	1633	866	2325	1599	913
	24.0	32	2069	1176	375	3329	1896	548	3069	1751	650	3075	1752	757	2950	1684	796	2600	1667	889	2375	1650	944
2.5	12.0	18	2206	1411	493	3107	2340	728	2876	2160	858	2870	2168	1003	2765	2072	1046	2590	1953	1123	2485	1858	1166
	14.0	20	2206	1411	493	3339	2340	728	3107	2182	868	3080	2168	1014	2975	2096	1057	2765	1953	1134	2660	1882	1188
	16.0	22	2206	1501	500	3570	2340	737	3306	2182	878	3290	2168	1025	3185	2096	1079	2975	1953	1155	2870	1882	1199
	18.0	25	2365	1610	508	3801	2542	747	3504	2362	888	3500	2358	1036	3360	2263	1079	3150	2120	1166	3010	2025	1210
	19.0	27	2445	1664	516	3934	2677	756	3636	2475	898	3640	2477	1046	3500	2382	1090	3290	2239	1166	3150	2144	1210
	22.0	30	2711	1646	516	4363	2655	756	4033	2452	898	4025	2453	1057	3885	2358	1101	3500	2287	1210	3255	2239	1275
	24.0	32	2897	1646	523	4661	2655	766	4297	2452	908	4305	2453	1057	4130	2358	1112	3640	2334	1243	3325	2310	1319
3.5	12.0	18	2269	1451	438	3196	2406	648	2958	2221	763	2952	2230	892	2844	2132	931	2664	2009	999	2556	1911	1038
	14.0	20	2269	1451	438	3434	2406	648	3196	2244	772	3168	2230	902	3060	2156	941	2844	2009	1009	2736	1936	1057
	16.0	22	2269	1544	445	3672	2406	656	3400	2244	781	3384	2230	912	3276	2156	960	3060	2009	1028	2952	1936	1067
	18.0	25	2433	1656	452	3910	2615	665	3604	2430	790	3600	2426	922	3456	2328	960	3240	2181	1038	3096	2083	1077
	19.0	27	2515	1711	459	4046	2754	673	3740	2545	799	3744	2548	931	3600	2450	970	3384	2303	1038	3240	2205	1077
	22.0	30	2788	1693	459	4488	2730	673	4148	2522	799	4140	2524	941	3996	2426	980	3600	2352	1077	3348	2303	1135
	24.0	32	2979	1693	466	4794	2730	682	4420	2522	808	4428	2524	941	4248	2426	989	3744	2401	1106	3420	2377	1174

	INDOOR		OUTDOOR TEMPERATURE (°CDB)																				
	EWB	EDB	-10			21			27			32			35			40			43		
	°C	°C	TC	SHC	PI	TC	SHC	PI	TC	SHC	PI	TC	SHC	PI	TC	SHC	PI	TC	SHC	PI	TC	SHC	PI
1.2+1.2	12.0	18	2269	1451	438	2131	1604	434	1972	1481	763	1968	1486	598	1896	1421	624	1776	1339	670	1704	1274	696
	14.0	20	2269	1451	438	2289	1604	434	2131	1496	772	2112	1486	605	2040	1437	631	1896	1339	676	1824	1290	709
	16.0	22	2269	1544	445	2448	1604	440	2267	1496	781	2256	1486	611	2184	1437	644	2040	1339	689	1968	1290	715
	18.0	25	2433	1656	452	2607	1743	445	2403	1620	790	2400	1617	618	2304	1552	644	2160	1454	696	2064	1388	722
	19.0	27	2515	1711	459	2697	1836	451	2493	1697	799	2496	1699	624	2400	1633	650	2256	1535	696	2160	1470	722
	22.0	30	2788	1693	459	2992	1820	451	2765	1681	799	2760	1682	631	2664	1617	657	2400	1568	722	2232	1535	761
	24.0	32	2979	1693	466	3196	1820	457	2947	1681	808	2952	1682	631	2832	1617	663	2496	1601	741	2280	1584	787
1.2+1.8	12.0	18	2269	1451	438	2663	2005	541	2465	1851	763	2952	2230	892	2370	1776	778	2220	1674	834	2130	1593	867
	14.0	20	2269	1451	438	2862	2005	541	2663	1870	772	3168	2230	902	2550	1797	786	2370	1674	842	2280	1613	883
	16.0	22	2269	1544	445	3060	2005	548	2833	1870	781	3384	2230	912	2730	1797	802	2550	1674	859	2460	1613	891
	18.0	25	2433	1656	452	3258	2179	555	3003	2025	790	3600	2426	922	2880	1940	802	2700	1817	867	2580	1735	899
	19.0	27	2515	1711	459	3372	2295	562	3117	2121	799	3744	2548	931	3000	2042	810	2820	1919	867	2700	1838	899
	22.0	30	2788	1693	459	3740	2275	562	3457	2102	799	4140	2524	941	3330	2021	818	3000	1960	899	2790	1919	948
	24.0	32	2979	1693	466	3995	2275	569	3683	2102	808	4428	2524	941	3540	2021	826	3120	2001	923	2850	1980	980
1.2+2.5	12.0	18	2269	1451	438	3196	2406	646	2958	2221	763	2952	2230	892	2844	2132	929	2664	2009	997	2556	1911	1036
	14.0	20	2269	1451	438	3434	2406	646	3196	2244	772	3168	2230	902	3060	2156	939	2844	2009	1007	2736	1936	1055
	16.0	22	2269	1544	445	3672	2406	655	3400	2244	781	3384	2230	912	3276	2156	958	3060	2009	1026	2952	1936	1065
	18.0	25	2433	1656	452	3910	2615	663	3604	2430	790	3600	2426	922	3456	2328	958	3240	2181	1036	3096	2083	1074
	19.0	27	2515	1711	459	4046	2754	672	3740	2545	799	3744	2548	931	3600	2450	968	3384	2303	1036	3240	2205	1074
	22.0	30	2788	1693	459	4488	2730	672	4148	2522	799	4140	2524	941	3996	2426	978	3600	2352	1074	3348	2303	1133
	24.0	32	2979	1693	466	4794	2730	680	4420	2522	808	4428	2524	941	4248	2426	987	3744	2401	1104	3420	2377	1171
1.2+3.5	12.0	18	2269	1451	438	3196	2406	646	2958	2221	763	2952	2230	892	2844	2132	929	2664	2009	997	2556	1911	1036
	14.0	20	2269	1451	438	3434	2406	646	3196	2244	772	3168	2230	902	3060	2156	939	2844	2009	1007	2736	1936	1055
	16.0	22	2269	1544	445	3672	2406	655	3400	2244	781	3384	2230	912	3276	2156	958	3060	2009	1026	2952	1936	1065
	18.0	25	2433	1656	452	3910	2615	663	3604	2430	790	3600	2426	922	3456	2328	958	3240	2181	1036	3096	2083	1074
	19.0	27	2515	1711	459	4046	2754	672	3740	2545	799	3744	2548	931	3600	2450	968	3384	2303	1036	3240	2205	1074
	22.0	30	2788	1693	459	4488	2730	672	4148	2522	799	4140	2524	941	3996	2426	978	3600	2352	1074	3348	2303	1133
	24.0	32	2979	1693	466	4794	2730	680	4420	2522	808	4428	2524	941	4248	2426	987	3744	2401	1104	3420	2377	1171
1.8+1.8	12.0	18	2269	1451	438	3196	2406	648	2958	2221	763	2952	2230	892	2844	2132	931	2664	2009	999	2556	1911	1038
	14.0	20	2269	1451	438	3434	2406	648	3196	2244	772	3168	2230	902	3060	2156	941	2844	2009	1009	2736	1936	1057
	16.0	22	2269	1544	445	3672	2406	656	3400	2244	781	3384	2230	912	3276	2156	960	3060	2009	1028	2952	1936	1067
	18.0	25	2433	1656	452	3910	2615	665	3604	2430	790	3600	2426	922	3456	2328	960	3240	2181	1038	3096	2083	1077
	19.0	27	2515	1711	459	4046	2754	673	3740	2545	799	3744	2548	931	3600	2450	970	3384	2303	1038	3240	2205	1077
	22.0	30	2788	1693	459	4488	2730	673	4148	2522	799	4140	2524	941	3996	2426	980	3600	2352	1077	3348	2303	1135
	24.0	32	2979	1693	466	4794	2730	682	4420	2522	808	4428	2524	941	4248	2426	989	3744	2401	1106	3420	2377	1174

EWB : Evaporator Wet Bulb temperature (°C)

EDB : Evaporator Dry Bulb temperature (°C)

(°CDB) : Outdoor Unit Inlet Air Dry Temperature (°C)

TC : Total Capacity (W)

SHC : Sensible Heating Capacity (W)

PI : Power Input

HEATING [50Hz, 230V]

	INDOOR	OUTDOOR TEMPERATURE (°CDW)																									
	EDB	-15			-10			-7			-5			0			7			10			15				
	°C	TC	SHC	PI	TC	SHC	PI	TC	SHC	PI	TC	SHC	PI	TC	SHC	PI	TC	SHC	PI	TC	SHC	PI	TC	SHC	PI	
RAM-36NP2A	16	1872	0	925	2964	0	950	3379	0	991	3656	0	1018	4451	0	1139	5257	0	1154	5736	0	1185	6620	0	1244		
	18	1846	0	938	2938	0	963	3347	0	1011	3619	0	1044	4404	0	1168	5231	0	1213	5715	0	1238	6594	0	1303		
	20	1820	0	950	2912	0	975	3318	0	1028	3588	0	1063	4368	0	1188	5200	0	1250	5590	0	1294	6552	0	1363		
	22	1794	0	963	2886	0	988	3276	0	1049	3536	0	1090	4321	0	1216	5169	0	1300	5652	0	1341	6521	0	1419		
	24	1768	0	975	2860	0	1000	3247	0	1070	3505	0	1116	4285	0	1245	5138	0	1350	5621	0	1393	6427	0	1476		
1.2	16	648	0	366	1026	0	376	1170	0	392	1265	0	403	1541	0	451	1820	0	457	1985	0	469	2291	0	493		
	18	639	0	371	1017	0	381	1158	0	400	1253	0	413	1525	0	462	1811	0	480	1978	0	490	2282	0	516		
	20	630	0	376	1008	0	386	1148	0	407	1242	0	421	1512	0	470	1800	0	495	1935	0	512	2268	0	540		
	22	621	0	381	999	0	391	1134	0	415	1224	0	432	1496	0	482	1789	0	515	1957	0	531	2257	0	562		
	24	612	0	386	990	0	396	1124	0	424	1213	0	442	1483	0	493	1778	0	535	1946	0	551	2225	0	585		
1.8	16	900	0	511	1425	0	524	1625	0	547	1758	0	562	2140	0	629	1820	0	457	2758	0	654	3183	0	687		
	18	888	0	518	1413	0	531	1609	0	558	1740	0	576	2118	0	644	1811	0	480	2748	0	683	3170	0	719		
	20	875	0	524	1400	0	538	1595	0	567	1725	0	587	2100	0	656	2500	0	690	2688	0	714	3150	0	752		
	22	863	0	531	1388	0	545	1575	0	579	1700	0	602	2078	0	671	1789	0	515	2718	0	740	3135	0	783		
	24	850	0	538	1375	0	552	1561	0	591	1685	0	616	2060	0	687	1778	0	535	2703	0	769	3090	0	815		
2.5	16	1224	0	644	1938	0	661	2209	0	689	2390	0	708	2910	0	793	1820	0	457	3750	0	825	4328	0	866		
	18	1207	0	653	1921	0	670	2188	0	704	2366	0	726	2880	0	813	1811	0	480	3737	0	861	4311	0	907		
	20	1190	0	661	1904	0	679	2169	0	715	2346	0	740	2856	0	827	3400	0	870	3655	0	900	4284	0	948		
	22	1173	0	670	1887	0	687	2142	0	730	2312	0	759	2825	0	847	1789	0	515	3696	0	934	4264	0	987		
	24	1156	0	679	1870	0	696	2123	0	745	2292	0	777	2802	0	867	1778	0	535	3675	0	969	4202	0	1027		
3.5	16	1224	0	644	1938	0	661	2209	0	689	2390	0	708	2910	0	793	1820	0	457	3750	0	825	4328	0	866		
	18	1207	0	653	1921	0	670	2188	0	704	2366	0	726	2880	0	813	1811	0	480	3737	0	861	4311	0	907		
	20	1190	0	661	1904	0	679	2169	0	715	2346	0	740	2856	0	827	4800	0	1080	3655	0	900	4284	0	948		
	22	1173	0	670	1887	0	687	2142	0	730	2312	0	759	2825	0	847	1789	0	515	3696	0	934	4264	0	987		
	24	1156	0	679	1870	0	696	2123	0	745	2292	0	777	2802	0	867	1778	0	535	3675	0	969	4202	0	1027		
1.2+1.2	16	1224	0	644	1938	0	661	2209	0	689	2390	0	708	2910	0	793	1820	0	457	3750	0	825	4328	0	866		
	18	1207	0	653	1921	0	670	2188	0	704	2366	0	726	2880	0	813	1811	0	480	3737	0	861	4311	0	907		
	20	1190	0	661	1904	0	679	2169	0	715	2346	0	740	2856	0	827	3600	0	850	3655	0	900	4284	0	948		
	22	1173	0	670	1887	0	687	2142	0	730	2312	0	759	2825	0	847	1789	0	515	3696	0	934	4264	0	987		
	24	1156	0	679	1870	0	696	2123	0	745	2292	0	777	2802	0	867	1778	0	535	3675	0	969	4202	0	1027		
1.2+1.8	16	1224	0	644	1938	0	661	2209	0	689	2390	0	708	2910	0	793	1820	0	457	3750	0	825	4328	0	866		
	18	1207	0	653	1921	0	670	2188	0	704	2366	0	726	2880	0	813	1811	0	480	3737	0	861	4311	0	907		
	20	1190	0	661	1904	0	679	2169	0	715	2346	0	740	2856	0	827	4300	0	1020	3655	0	900	4284	0	948		
	22	1173	0	670	1887	0	687	2142	0	730	2312	0	759	2825	0	847	1789	0	515	3696	0	934	4264	0	987		
	24	1156	0	679	1870	0	696	2123	0	745	2292	0	777	2802	0	867	1778	0	535	3675	0	969	4202	0	1027		
1.2+2.5	16	1224	0	644	1938	0	661	2209	0	689	2390	0	708	2910	0	793	1820	0	457	3750	0	825	4328	0	866		
	18	1207	0	653	1921	0	670	2188	0	704	2366	0	726	2880	0	813	1811	0	480	3737	0	861	4311	0	907		
	20	1190	0	661	1904	0	679	2169	0	715	2346	0	740	2856	0	827	5200	0	1250	3655	0	900	4284	0	948		
	22	1173	0	670	1887	0	687	2142	0	730	2312	0	759	2825	0	847	1789	0	515	3696	0	934	4264	0	987		
	24	1156	0	679	1870	0	696	2123	0	745	2292	0	777	2802	0	867	1778	0	535	3675	0	969	4202	0	1027		
1.2+3.5	16	1872	0	925	2964	0	950	3379	0	991	3656	0	1018	4451	0	1139	1820	0	457	5736	0	1185	6620	0	1244		
	18	1846	0	938	2938	0	963	3347	0	1011	3619	0	1044	4404	0	1168	1811	0	480	5715	0	1238	6594	0	1303		
	20	1820	0	950	2912	0	975	3318	0	1028	3588	0	1063	4368	0	1188	5200	0	1250	5590	0	1294	6552	0	1363		
	22	1794	0	963	2886	0	988	3276	0	1049	3536	0	1090	4321	0	1216	1789	0	515	5652	0	1341	6521	0	1419		
	24	1768	0	975	2860	0	1000	3247	0	1070	3505	0	1116	4285	0	1245	1778	0	535	5621	0	1393	6427	0	1476		

	INDOOR	OUTDOOR TEMPERATURE (°CDW)																							
	EDB	-15			-10			-7			-5			0			7			10			15		
	°C	TC	SHC	PI	TC	SHC	PI	TC	SHC	PI	TC	SHC	PI	TC	SHC	PI	TC	SHC	PI	TC	SHC	PI	TC	SHC	PI
1.8+1.8	16	1800	0	888	2850	0	912	3249	0	951	3515	0	977	4280	0	1093	1820	0	457	5515	0	1138	6365	0	1194
	18	1775	0	900	2825	0	924	3218	0	971	3480	0	1002	4235	0	1121	1811	0	480	5495	0	1188	6340	0	1250
	20	1750	0	912	2800	0	936	3190	0	986	3450	0	1020	4200	0	1140	5000	0	1200	5375	0	1242	6300	0	1308
	22	1725	0	924	2775	0	948	3150	0	1007	3400	0	1046	4155	0	1168	1789	0	515	5435	0	1288	6270	0	1362
	24	1700	0	936	2750	0	960	3122	0	1027	3370	0	1072	4120	0	1195	1778	0	535	5405	0	1337	6180	0	1417
1.8+2.5	16	1872	0	925	2964	0	950	3379	0	991	3656	0	1018	4451	0	1139	1820	0	457	5736	0	1185	6620	0	1244
	18	1846	0	938	2938	0	963	3347	0	1011	3619	0	1044	4404	0	1168	1811	0	480	5715	0	1238	6594	0	1303
	20	1820	0	950	2912	0	975	3318	0	1028	3588	0	1063	4368	0	1188	5200	0	1250	5590	0	1294	6552	0	1363
	22	1794	0	963	2886	0	988	3276	0	1049	3536	0	1090	4321	0	1216	1789	0	515	5652	0	1341	6521	0	1419
	24	1768	0	975	2860	0	1000	3247	0	1070	3505	0	1116	4285	0	1245	1778	0	535	5621	0	1393	6427	0	1476
2.5+2.5	16	1872	0	925	2964	0	950	3379	0	991	3656	0	1018	4451	0	1139	1820	0	457	5736	0	1185	6620	0	1244
	18	1846	0	938	2938	0	963	3347	0	1011	3619	0	1044	4404	0	1168	1811	0	480	5715	0	1238	6594	0	1303
	20	1820	0	950	2912	0	975	3318	0	1028	3588	0	1063	4368	0	1188	5200	0	1250	5590	0	1294	6552	0	1363
	22	1794	0	963	2886	0	988	3276	0	1049	3536	0	1090	4321	0	1216	1789	0	515	5652	0	1341	6521	0	1419
	24	1768	0	975	2860	0	1000	3247	0	1070	3505	0	1116	4285	0	1245	1778	0	535	5621	0	1393	6427	0	1476
1.8+3.5	16	1872	0	925	2964	0	950	3379	0	991	3656	0	1018	4451	0	1139	1820	0	457	5736	0	1185	6620	0	1244
	18	1846	0	938	2938	0	963	3347	0	1011	3619	0	1044	4404	0	1168	1811	0	480	5715	0	1238	6594	0	1303
	20	1820	0	950	2912	0	975	3318	0	1028	3588	0	1063	4368	0	1188	5200	0	1250	5590	0	1294	6552	0	1363
	22	1794	0	963	2886	0	988	3276	0	1049	3536	0	1090	4321	0	1216	1789	0	515	5652	0	1341	6521	0	1419
	24	1768	0	975	2860	0	1000	3247	0	1070	3505	0	1116	4285	0	1245	1778	0	535	5621	0	1393	6427	0	1476
2.5+3.5	16	1872	0	925	2964	0	950	3379	0	991	3656	0	1018	4451	0	1139	1820	0	457	5736	0	1185	6620	0	1244
	18	1846	0	938	2938	0	963	3347	0	1011	3619	0	1044	4404	0	1168	1811	0	480	5715	0	1238	6594	0	1303
	20	1820	0	950	2912	0	975	3318	0	1028	3588	0	1063	4368	0	1188	5200	0	1250	5590	0	1294	6552	0	1363
	22	1794	0	963	2886	0	988	3276	0	1049	3536	0	1090	4321	0	1216	1789	0	515	5652	0	1341	6521	0	1419
	24	1768	0	975	2860	0	1000	3247	0	1070	3505	0	1116	4285	0	1245	1778	0	535	5621	0	1393	6427	0	1476

EWB : Evaporator Wet Bulb temperature (°C)
EDB : Evaporator Dry Bulb temperature (°C)
(°CDB) : Outdoor Unit Inlet Air Dry Temperature (°C)

TC : Total Capacity (W)
SHC : Sensible Heating Capacity (W)
PI : Power Input

4.2.8. RAM-53NP2A

COOLING [50Hz, 230V]

	INDOOR		OUTDOOR TEMPERATURE (°CDB)																				
	EWB	EDB	-10			21			27			32			35			40			43		
	°C	°C	TC	SHC	PI	TC	SHC	PI	TC	SHC	PI	TC	SHC	PI	TC	SHC	PI	TC	SHC	PI	TC	SHC	PI
RAM-53NP2A	12.0	18	2838	1786	587	4607	3414	999	4264	3151	1177	4346	3231	1406	4187	3089	1467	3922	2911	1574	3763	2769	1635
	14.0	20	2838	1786	587	4950	3414	999	4607	3184	1191	4664	3231	1421	4505	3124	1482	4187	2911	1589	4028	2805	1666
	16.0	22	2838	1901	596	5293	3414	1012	4901	3184	1205	4982	3231	1436	4823	3124	1513	4505	2911	1620	4346	2805	1681
	18.0	25	3043	2038	605	5636	3710	1025	5195	3447	1219	5300	3515	1452	5088	3373	1513	4770	3160	1635	4558	3018	1696
	19.0	27	3146	2107	614	5832	3907	1038	5391	3611	1232	5512	3692	1467	5300	3550	1528	4982	3337	1635	4770	3195	1696
	22.0	30	3488	2084	614	6469	3874	1038	5979	3578	1232	6095	3657	1482	5883	3515	1543	5300	3408	1696	4929	3337	1788
	24.0	32	3727	2084	623	6911	3874	1051	6371	3578	1246	6519	3657	1482	6254	3515	1559	5512	3479	1742	5035	3444	1849
1.2	12.0	18	643	441	142	1043	842	242	965	778	285	984	797	340	948	762	355	888	718	381	852	683	396
	14.0	20	643	441	142	1121	842	242	1043	786	288	1056	797	344	1020	771	359	948	718	385	912	692	403
	16.0	22	643	469	144	1198	842	245	1110	786	292	1128	797	348	1092	771	366	1020	718	392	984	692	407
	18.0	25	689	503	147	1276	915	248	1176	851	295	1200	867	352	1152	832	366	1080	780	396	1032	745	411
	19.0	27	712	520	149	1321	964	251	1221	891	298	1248	911	355	1200	876	370	1128	823	396	1080	788	411
	22.0	30	790	514	149	1465	956	251	1354	883	298	1380	902	359	1332	867	374	1200	841	411	1116	823	433
	24.0	32	844	514	151	1565	956	255	1443	883	302	1476	902	359	1416	867	377	1248	858	422	1140	850	448
1.8	12.0	18	964	661	190	1565	1264	324	1448	1166	381	1476	1196	455	1422	1143	475	1332	1077	510	1278	1025	530
	14.0	20	964	661	190	1681	1264	324	1565	1179	386	1584	1196	460	1530	1156	480	1422	1077	515	1368	1038	540
	16.0	22	964	704	193	1798	1264	328	1665	1179	390	1692	1196	465	1638	1156	490	1530	1077	525	1476	1038	545
	18.0	25	1034	754	196	1914	1373	332	1764	1276	395	1800	1301	470	1728	1248	490	1620	1169	530	1548	1117	549
	19.0	27	1068	780	199	1981	1446	336	1831	1337	399	1872	1367	475	1800	1314	495	1692	1235	530	1620	1183	549
	22.0	30	1185	771	199	2197	1434	336	2031	1324	399	2070	1353	480	1998	1301	500	1800	1261	549	1674	1235	579
	24.0	32	1266	771	202	2347	1434	341	2164	1324	404	2214	1353	480	2124	1301	505	1872	1288	564	1710	1275	599
2.5	12.0	18	1339	918	269	2173	1755	458	2011	1620	539	2050	1661	644	1975	1588	672	1850	1497	721	1775	1424	749
	14.0	20	1339	918	269	2335	1755	458	2173	1637	546	2200	1661	651	2125	1606	679	1975	1497	728	1900	1442	763
	16.0	22	1339	977	273	2497	1755	464	2312	1637	552	2350	1661	658	2275	1606	693	2125	1497	742	2050	1442	770
	18.0	25	1435	1048	277	2659	1907	470	2451	1772	558	2500	1807	665	2400	1734	693	2250	1624	749	2150	1551	777
	19.0	27	1484	1083	281	2751	2008	476	2543	1856	565	2600	1898	672	2500	1825	700	2350	1716	749	2250	1643	777
	22.0	30	1645	1071	281	3052	1991	476	2820	1840	565	2875	1880	679	2775	1807	707	2500	1752	777	2325	1716	819
	24.0	32	1758	1071	286	3260	1991	482	3005	1840	571	3075	1880	679	2950	1807	714	2600	1789	798	2375	1770	847
3.5	12.0	18	1874	1286	396	3042	2457	673	2816	2268	793	2870	2325	948	2765	2223	989	2590	2095	1061	2485	1993	1102
	14.0	20	1874	1286	396	3269	2457	673	3042	2292	803	3080	2325	958	2975	2248	999	2765	2095	1071	2660	2018	1123
	16.0	22	1874	1368	402	3495	2457	682	3237	2292	812	3290	2325	968	3185	2248	1020	2975	2095	1092	2870	2018	1133
	18.0	25	2010	1467	408	3722	2670	691	3431	2481	821	3500	2529	979	3360	2427	1020	3150	2274	1102	3010	2172	1143
	19.0	27	2077	1517	414	3852	2812	700	3560	2599	831	3640	2657	989	3500	2555	1030	3290	2402	1102	3150	2300	1143
	22.0	30	2303	1500	414	4272	2788	700	3949	2575	831	4025	2632	999	3885	2529	1040	3500	2453	1143	3255	2402	1205
	24.0	32	2461	1500	420	4564	2788	709	4208	2575	840	4305	2632	999	4130	2529	1051	3640	2504	1174	3325	2478	1246
5	12.0	18	2677	1837	580	4346	3510	987	4023	3240	1163	4100	3322	1389	3950	3176	1450	3700	2993	1555	3550	2847	1616
	14.0	20	2677	1837	580	4670	3510	987	4346	3274	1177	4400	3322	1404	4250	3212	1465	3950	2993	1570	3800	2884	1646
	16.0	22	2677	1955	589	4994	3510	1000	4624	3274	1191	4700	3322	1419	4550	3212	1495	4250	2993	1601	4100	2884	1661
	18.0	25	2871	2096	598	5317	3814	1013	4901	3544	1204	5000	3614	1435	4800	3468	1495	4500	3249	1616	4300	3103	1676
	19.0	27	2968	2166	607	5502	4017	1026	5086	3713	1218	5200	3796	1450	5000	3650	1510	4700	3431	1616	4500	3285	1676
	22.0	30	3290	2143	607	6103	3983	1026	5641	3679	1218	5750	3760	1465	5550	3614	1525	5000	3504	1676	4650	3431	1767
	24.0	32	3516	2143	616	6519	3983	1039	6011	3679	1232	6150	3760	1465	5900	3614	1540	5200	3577	1721	4750	3541	1827

	INDOOR		OUTDOOR TEMPERATURE (°CDB)																				
	EWB	EDB	-10			21			27			32			35			40			43		
	°C	°C	TC	SHC	PI	TC	SHC	PI	TC	SHC	PI	TC	SHC	PI	TC	SHC	PI	TC	SHC	PI	TC	SHC	PI
1.2+1.2	12.0	18	1285	882	265	2086	1685	451	1931	1555	532	1968	1594	635	1896	1524	662	1776	1437	711	1704	1367	738
	14.0	20	1285	882	265	2242	1685	451	2086	1572	538	2112	1594	642	2040	1542	669	1896	1437	718	1824	1384	752
	16.0	22	1285	938	269	2397	1685	457	2219	1572	544	2256	1594	649	2184	1542	683	2040	1437	731	1968	1384	759
	18.0	25	1378	1006	273	2552	1831	463	2353	1701	550	2400	1734	656	2304	1664	683	2160	1559	738	2064	1489	766
	19.0	27	1425	1040	277	2641	1928	469	2441	1782	557	2496	1822	662	2400	1752	690	2256	1647	738	2160	1577	766
	22.0	30	1579	1029	277	2930	1912	469	2708	1766	557	2760	1805	669	2664	1734	697	2400	1682	766	2232	1647	807
	24.0	32	1688	1029	282	3129	1912	475	2885	1766	563	2952	1805	669	2832	1734	704	2496	1717	787	2280	1699	835
1.2+1.8	12.0	18	1606	1102	353	2608	2106	601	2414	1944	709	2460	1993	846	2370	1905	883	2220	1796	948	2130	1708	984
	14.0	20	1606	1102	353	2802	2106	601	2608	1964	717	2640	1993	856	2550	1927	892	2370	1796	957	2280	1730	1003
	16.0	22	1606	1173	359	2996	2106	609	2774	1964	725	2820	1993	865	2730	1927	911	2550	1796	975	2460	1730	1012
	18.0	25	1723	1257	364	3190	2288	617	2941	2126	734	3000	2168	874	2880	2081	911	2700	1949	984	2580	1862	1021
	19.0	27	1781	1300	370	3301	2410	625	3052	2228	742	3120	2278	883	3000	2190	920	2820	2059	984	2700	1971	1021
	22.0	30	1974	1286	370	3662	2390	625	3385	2207	742	3450	2256	892	3330	2168	929	3000	2102	1021	2790	2059	1076
	24.0	32	2110	1286	375	3912	2390	633	3606	2207	750	3690	2256	892	3540	2168	938	3120	2146	1049	2850	2124	1113
1.2+2.5	12.0	18	1981	1359	396	3216	2598	673	2977	2398	793	3034	2458	948	2923	2350	989	2738	2215	1061	2627	2107	1102
	14.0	20	1981	1359	396	3456	2598	673	3216	2423	803	3256	2458	958	3145	2377	999	2923	2215	1071	2812	2134	1123
	16.0	22	1981	1446	402	3695	2598	682	3422	2423	812	3478	2458	968	3367	2377	1020	3145	2215	1092	3034	2134	1133
	18.0	25	2125	1551	408	3935	2822	691	3627	2623	821	3700	2674	979	3552	2566	1020	3330	2404	1102	3182	2296	1143
	19.0	27	2196	1603	414	4072	2972	700	3764	2747	831	3848	2809	989	3700	2701	1030	3478	2539	1102	3330	2431	1143
	22.0	30	2435	1586	414	4516	2947	700	4174	2722	831	4255	2782	999	4107	2674	1040	3700	2593	1143	3441	2539	1205
	24.0	32	2602	1586	420	4824	2947	709	4448	2722	840	4551	2782	999	4366	2674	1051	3848	2647	1174	3515	2620	1246
1.2+3.5	12.0	18	2517	1727	534	4085	3300	909	3781	3046	1071	3854	3122	1279	3713	2985	1334	3478	2813	1432	3337	2676	1487
	14.0	20	2517	1727	534	4390	3300	909	4085	3078	1083	4136	3122	1293	3995	3019	1348	3713	2813	1446	3572	2710	1515
	16.0	22	2517	1837	542	4694	3300	920	4346	3078	1096	4418	3122	1307	4277	3019	1376	3995	2813	1473	3854	2710	1529
	18.0	25	2699	1970	550	4998	3585	932	4607	3331	1109	4700	3397	1321	4512	3259	1376	4230	3054	1487	4042	2916	1543
	19.0	27	2790	2036	559	5172	3776	944	4781	3490	1121	4888	3568	1334	4700	3431	1390	4418	3225	1487	4230	3088	1543
	22.0	30	3093	2014	559	5737	3744	944	5302	3458	1121	5405	3534	1348	5217	3397	1404	4700	3294	1543	4371	3225	1626
	24.0	32	3305	2014	567	6128	3744	956	5650	3458	1134	5781	3534	1348	5546	3397	1418	4888	3362	1585	4465	3328	1682
1.2+5.0	12.0	18	2838	1947	587	4607	3721	999	4264	3435	1177	4346	3521	1406	4187	3366	1467	3922	3173	1574	3763	3018	1635
	14.0	20	2838	1947	587	4950	3721	999	4607	3470	1191	4664	3521	1421	4505	3405	1482	4187	3173	1589	4028	3057	1666
	16.0	22	2838	2072	596	5293	3721	1012	4901	3470	1205	4982	3521	1436	4823	3405	1513	4505	3173	1620	4346	3057	1681
	18.0	25	3043	2222	605	5636	4043	1025	5195	3757	1219	5300	3830	1452	5088	3676	1513	4770	3443	1635	4558	3289	1696
	19.0	27	3146	2296	614	5832	4258	1038	5391	3936	1232	5512	4024	1467	5300	3869	1528	4982	3637	1635	4770	3482	1696
	22.0	30	3488	2271	614	6469	4222	1038	5979	3900	1232	6095	3985	1482	5883	3830	1543	5300	3714	1696	4929	3637	1788
	24.0	32	3727	2271	623	6911	4222	1051	6371	3900	1246	6519	3985	1482	6254	3830	1559	5512	3792	1742	5035	3753	1849
1.8+1.8	12.0	18	1928	1322	390	3129	2527	663	2896	2333	782	2952	2391	934	2844	2286	974	2664	2155	1045	2556	2050	1086
	14.0	20	1928	1322	390	3362	2527	663	3129	2357	791	3168	2391	944	3060	2313	985	2844	2155	1056	2736	2076	1106
	16.0	22	1928	1407	396	3595	2527	672	3329	2357	800	3384	2391	954	3276	2313	1005	3060	2155	1076	2952	2076	1117
	18.0	25	2067	1509	402	3828	2746	681	3529	2552	809	3600	2602	964	3456	2497	1005	3240	2339	1086	3096	2234	1127
	19.0	27	2137	1560	408	3962	2892	690	3662	2673	819	3744	2733	974	3600	2628	1015	3384	2470	1086	3240	2365	1127
	22.0	30	2369	1543	408	4394	2868	690	4061	2649	819	4140	2707	985	3996	2602	1025	3600	2523	1127	3348	2470	1188
	24.0	32	2532	1543	414	4694	2868	698	4328	2649	828	4428	2707	985	4248	2602	1035	3744	2575	1157	3420	2549	1228
1.8+2.5	12.0	18	2303	1580	448	3738	3019	763	3459	2787	899	3526	2856	1074	3397	2731	1120	3182	2574	1202	3053	2448	1249
	14.0	20	2303	1580	448	4016	3019	763	3738	2816	910	3784	2856	1085	3655	2762	1132	3397	2574	1214	3268	2480	1272
	16.0	22	2303	1681	455	4294	3019	773	3976	2816	920	4042	2856	1097	3913	2762	1155	3655	2574	1237	3526	2480	1284
	18.0	25	2469	1802	462	4573	3280	783	4215	3048	931	4300	3108	1109	4128	2982	1155	3870	2794	1249	3698	2668	1295
	19.0	27	2552	1863	469	4732	3454	793	4374	3193	941	4472	3265	1120	4300	3139	1167	4042	2951	1249	3870	2825	1295
	22.0	30	2830	1843	469	5249	3425	793	4851	3164	941	4945	3233	1132	4773	3108	1179	4300	3013	1295	3999	2951	1365
	24.0	32	3024	1843	476	5607	3425	803	5169	3164	952	5289	3233	1132	5074	3108	1190	4472	3076	1330	4085	3045	1412

	INDOOR		OUTDOOR TEMPERATURE (°CDB)																				
	EWB	EDB	-10			21			27			32			35			40			43		
	°C	°C	TC	SHC	PI	TC	SHC	PI	TC	SHC	PI	TC	SHC	PI	TC	SHC	PI	TC	SHC	PI	TC	SHC	PI
1.8+3.5	12.0	18	2677	1988	565	4346	3799	962	4023	3507	1134	4100	3595	1354	3950	3437	1413	3700	3239	1516	3550	3081	1575
	14.0	20	2677	1988	565	4670	3799	962	4346	3543	1147	4400	3595	1369	4250	3476	1428	3950	3239	1531	3800	3121	1604
	16.0	22	2677	2115	574	4994	3799	975	4624	3543	1161	4700	3595	1384	4550	3476	1457	4250	3239	1560	4100	3121	1619
	18.0	25	2871	2268	583	5317	4128	987	4901	3835	1174	5000	3911	1398	4800	3753	1457	4500	3516	1575	4300	3358	1634
	19.0	27	2968	2345	592	5502	4347	1000	5086	4018	1187	5200	4108	1413	5000	3950	1472	4700	3713	1575	4500	3555	1634
	22.0	30	3290	2319	592	6103	4310	1000	5641	3981	1187	5750	4069	1428	5550	3911	1487	5000	3792	1634	4650	3713	1722
	24.0	32	3516	2319	601	6519	4310	1013	6011	3981	1201	6150	4069	1428	5900	3911	1501	5200	3871	1678	4750	3832	1781
1.8+5.8	12.0	18	2785	1910	576	4520	3651	980	4183	3370	1155	4264	3454	1380	4108	3303	1440	3848	3113	1545	3692	2961	1605
	14.0	20	2785	1910	576	4857	3651	980	4520	3405	1169	4576	3454	1395	4420	3340	1455	4108	3113	1560	3952	2999	1635
	16.0	22	2785	2033	585	5193	3651	993	4809	3405	1183	4888	3454	1410	4732	3340	1485	4420	3113	1590	4264	2999	1650
	18.0	25	2986	2180	594	5530	3967	1006	5097	3686	1196	5200	3758	1425	4992	3606	1485	4680	3378	1605	4472	3227	1665
	19.0	27	3086	2253	603	5722	4177	1019	5289	3861	1210	5408	3948	1440	5200	3796	1500	4888	3568	1605	4680	3416	1665
	22.0	30	3422	2229	603	6347	4142	1019	5866	3826	1210	5980	3910	1455	5772	3758	1515	5200	3644	1665	4836	3568	1755
	24.0	32	3657	2229	612	6780	4142	1032	6251	3826	1223	6396	3910	1455	6136	3758	1530	5408	3720	1710	4940	3682	1815
2.5+2.5	12.0	18	2677	1837	565	4346	3510	962	4023	3240	1134	4100	3322	1354	3950	3176	1413	3700	2993	1516	3550	2847	1575
	14.0	20	2677	1837	565	4670	3510	962	4346	3274	1147	4400	3322	1369	4250	3212	1428	3950	2993	1531	3800	2884	1604
	16.0	22	2677	1955	574	4994	3510	975	4624	3274	1161	4700	3322	1384	4550	3212	1457	4250	2993	1560	4100	2884	1619
	18.0	25	2871	2096	583	5317	3814	987	4901	3544	1174	5000	3614	1398	4800	3468	1457	4500	3249	1575	4300	3103	1634
	19.0	27	2968	2166	592	5502	4017	1000	5086	3713	1187	5200	3796	1413	5000	3650	1472	4700	3431	1575	4500	3285	1634
	22.0	30	3290	2143	592	6103	3983	1000	5641	3679	1187	5750	3760	1428	5550	3614	1487	5000	3504	1634	4650	3431	1722
	24.0	32	3516	2143	601	6519	3983	1013	6011	3679	1201	6150	3760	1428	5900	3614	1501	5200	3577	1678	4750	3541	1781
2.5+3.5	12.0	18	2785	1988	576	4520	3799	980	4183	3507	1155	4264	3595	1380	4108	3437	1440	3848	3239	1545	3692	3081	1605
	14.0	20	2785	1988	576	4857	3799	980	4520	3543	1169	4576	3595	1395	4420	3476	1455	4108	3239	1560	3952	3121	1635
	16.0	22	2785	2115	585	5193	3799	993	4809	3543	1183	4888	3595	1410	4732	3476	1485	4420	3239	1590	4264	3121	1650
	18.0	25	2986	2268	594	5530	4128	1006	5097	3835	1196	5200	3911	1425	4992	3753	1485	4680	3516	1605	4472	3358	1665
	19.0	27	3086	2345	603	5722	4347	1019	5289	4018	1210	5408	4108	1440	5200	3950	1500	4888	3713	1605	4680	3555	1665
	22.0	30	3422	2319	603	6347	4310	1019	5866	3981	1210	5980	4069	1455	5772	3911	1515	5200	3792	1665	4836	3713	1755
	24.0	32	3657	2319	612	6780	4310	1032	6251	3981	1223	6396	4069	1455	6136	3911	1530	5408	3871	1710	4940	3832	1815
3.5+3.5	12.0	18	2785	1988	576	4520	3799	980	4183	3507	1155	4264	3595	1380	4108	3437	1440	3848	3239	1545	3692	3081	1605
	14.0	20	2785	1988	576	4857	3799	980	4520	3543	1169	4576	3595	1395	4420	3476	1455	4108	3239	1560	3952	3121	1635
	16.0	22	2785	2115	585	5193	3799	993	4809	3543	1183	4888	3595	1410	4732	3476	1485	4420	3239	1590	4264	3121	1650
	18.0	25	2986	2268	594	5530	4128	1006	5097	3835	1196	5200	3911	1425	4992	3753	1485	4680	3516	1605	4472	3358	1665
	19.0	27	3086	2345	603	5722	4347	1019	5289	4018	1210	5408	4108	1440	5200	3950	1500	4888	3713	1605	4680	3555	1665
	22.0	30	3422	2319	603	6347	4310	1019	5866	3981	1210	5980	4069	1455	5772	3911	1515	5200	3792	1665	4836	3713	1755
	24.0	32	3657	2319	612	6780	4310	1032	6251	3981	1223	6396	4069	1455	6136	3911	1530	5408	3871	1710	4940	3832	1815
2.5+5.0	12.0	18	2785	1988	576	4520	3799	980	4183	3507	1155	4264	3595	1380	4108	3437	1440	3848	3239	1545	3692	3081	1605
	14.0	20	2785	1988	576	4857	3799	980	4520	3543	1169	4576	3595	1395	4420	3476	1455	4108	3239	1560	3952	3121	1635
	16.0	22	2785	2115	585	5193	3799	993	4809	3543	1183	4888	3595	1410	4732	3476	1485	4420	3239	1590	4264	3121	1650
	18.0	25	2986	2268	594	5530	4128	1006	5097	3835	1196	5200	3911	1425	4992	3753	1485	4680	3516	1605	4472	3358	1665
	19.0	27	3086	2345	603	5722	4347	1019	5289	4018	1210	5408	4108	1440	5200	3950	1500	4888	3713	1605	4680	3555	1665
	22.0	30	3422	2319	603	6347	4310	1019	5866	3981	1210	5980	4069	1455	5772	3911	1515	5200	3792	1665	4836	3713	1755
	24.0	32	3657	2319	612	6780	4310	1032	6251	3981	1223	6396	4069	1455	6136	3911	1530	5408	3871	1710	4940	3832	1815

HEATING [50Hz, 230V]

	INDOOR	OUTDOOR TEMPERATURE (°CDB)																							
	EDB	-15			-10			-7			-5			0			7			10			15		
	°C	TC	SHC	PI	TC	SHC	PI	TC	SHC	PI	TC	SHC	PI	TC	SHC	PI	TC	SHC	PI	TC	SHC	PI	TC	SHC	PI
RAM-53NP2A	16	2448	0	1325	3876	0	1360	4419	0	1418	4780	0	1457	5821	0	1631	6875	0	1652	7500	0	1697	8656	0	1781
	18	2414	0	1343	3842	0	1378	4376	0	1448	4733	0	1495	5760	0	1672	6841	0	1736	7473	0	1772	8622	0	1865
	20	2380	0	1360	3808	0	1396	4338	0	1471	4692	0	1522	5712	0	1701	6800	0	1790	7310	0	1853	8568	0	1951
	22	2346	0	1378	3774	0	1414	4284	0	1502	4624	0	1561	5651	0	1742	6759	0	1862	7392	0	1921	8527	0	2032
	24	2312	0	1396	3740	0	1432	4246	0	1532	4583	0	1598	5603	0	1783	6718	0	1933	7351	0	1994	8405	0	2114
1.2	16	900	0	511	1425	0	524	1625	0	547	1758	0	562	2140	0	629	2528	0	637	2758	0	654	3183	0	687
	18	888	0	518	1413	0	531	1609	0	558	1740	0	576	2118	0	644	2515	0	669	2748	0	683	3170	0	719
	20	875	0	524	1400	0	538	1595	0	567	1725	0	587	2100	0	656	1800	0	495	2688	0	714	3150	0	752
	22	863	0	531	1388	0	545	1575	0	579	1700	0	602	2078	0	671	2485	0	718	2718	0	740	3135	0	783
	24	850	0	538	1375	0	552	1561	0	591	1685	0	616	2060	0	687	2470	0	745	2703	0	769	3090	0	815
1.8	16	900	0	511	1425	0	524	1625	0	547	1758	0	562	2140	0	629	2528	0	637	2758	0	654	3183	0	687
	18	888	0	518	1413	0	531	1609	0	558	1740	0	576	2118	0	644	2515	0	669	2748	0	683	3170	0	719
	20	875	0	524	1400	0	538	1595	0	567	1725	0	587	2100	0	656	2500	0	690	2688	0	714	3150	0	752
	22	863	0	531	1388	0	545	1575	0	579	1700	0	602	2078	0	671	2485	0	718	2718	0	740	3135	0	783
	24	850	0	538	1375	0	552	1561	0	591	1685	0	616	2060	0	687	2470	0	745	2703	0	769	3090	0	815
2.5	16	1404	0	784	2223	0	806	2534	0	840	2742	0	863	3338	0	966	3943	0	978	4302	0	1005	4965	0	1055
	18	1385	0	795	2204	0	816	2510	0	858	2714	0	885	3303	0	990	3923	0	1028	4286	0	1049	4945	0	1105
	20	1365	0	806	2184	0	827	2488	0	871	2691	0	901	3276	0	1007	3900	0	1060	4193	0	1097	4914	0	1155
	22	1346	0	816	2165	0	837	2457	0	890	2652	0	924	3241	0	1031	3877	0	1102	4239	0	1137	4891	0	1203
	24	1326	0	827	2145	0	848	2435	0	907	2629	0	947	3214	0	1056	3853	0	1145	4216	0	1181	4820	0	1252
3.5	16	1728	0	977	2736	0	1003	3119	0	1046	3374	0	1074	4109	0	1203	4853	0	1218	5294	0	1251	6110	0	1313
	18	1704	0	990	2712	0	1016	3089	0	1068	3341	0	1102	4066	0	1233	4829	0	1280	5275	0	1307	6086	0	1375
	20	1680	0	1003	2688	0	1030	3062	0	1085	3312	0	1122	4032	0	1254	4800	0	1320	5160	0	1366	6048	0	1439
	22	1656	0	1016	2664	0	1043	3024	0	1108	3264	0	1151	3989	0	1284	4771	0	1373	5218	0	1416	6019	0	1498
	24	1632	0	1030	2640	0	1056	2997	0	1130	3235	0	1179	3955	0	1315	4742	0	1426	5189	0	1470	5933	0	1559
5	16	2340	0	1332	3705	0	1368	4224	0	1426	4570	0	1465	5564	0	1640	6572	0	1661	7170	0	1706	8275	0	1791
	18	2308	0	1350	3673	0	1386	4183	0	1456	4524	0	1503	5506	0	1681	6539	0	1746	7144	0	1782	8242	0	1876
	20	2275	0	1368	3640	0	1404	4147	0	1480	4485	0	1530	5460	0	1710	6500	0	1800	6988	0	1863	8190	0	1962
	22	2243	0	1386	3608	0	1422	4095	0	1511	4420	0	1570	5402	0	1751	6461	0	1872	7066	0	1931	8151	0	2043
	24	2210	0	1404	3575	0	1440	4059	0	1540	4381	0	1607	5356	0	1793	6422	0	1944	7027	0	2005	8034	0	2126
1.2+1.2	16	2376	0	1228	3762	0	1262	4289	0	1315	4640	0	1351	5650	0	1512	6673	0	1532	7280	0	1574	8402	0	1652
	18	2343	0	1245	3729	0	1278	4248	0	1343	4594	0	1386	5590	0	1550	6640	0	1610	7253	0	1643	8369	0	1730
	20	2310	0	1262	3696	0	1295	4211	0	1365	4554	0	1411	5544	0	1577	3600	0	950	7095	0	1718	8316	0	1809
	22	2277	0	1278	3663	0	1311	4158	0	1393	4488	0	1448	5485	0	1615	6560	0	1726	7174	0	1781	8276	0	1884
	24	2244	0	1295	3630	0	1328	4121	0	1421	4448	0	1482	5438	0	1653	6521	0	1793	7135	0	1849	8158	0	1960
1.2+1.8	16	2376	0	1228	3762	0	1262	4289	0	1315	4640	0	1351	5650	0	1512	6673	0	1532	7280	0	1574	8402	0	1652
	18	2343	0	1245	3729	0	1278	4248	0	1343	4594	0	1386	5590	0	1550	6640	0	1610	7253	0	1643	8369	0	1730
	20	2310	0	1262	3696	0	1295	4211	0	1365	4554	0	1411	5544	0	1577	4300	0	1100	7095	0	1718	8316	0	1809
	22	2277	0	1278	3663	0	1311	4158	0	1393	4488	0	1448	5485	0	1615	6560	0	1726	7174	0	1781	8276	0	1884
	24	2244	0	1295	3630	0	1328	4121	0	1421	4448	0	1482	5438	0	1653	6521	0	1793	7135	0	1849	8158	0	1960

EWB : Evaporator Wet Bulb temperature (°C)
EDB : Evaporator Dry Bulb temperature (°C)
(°CDB) : Outdoor Unit Inlet Air Dry Temperature (°C)

TC : Total Capacity (W)
SHC : Sensible Heating Capacity (W)
PI : Power Input

	INDOOR	OUTDOOR TEMPERATURE (°CDB)																							
	EDB	-15			-10			-7			-5			0			7			10			15		
	°C	TC	SHC	PI	TC	SHC	PI	TC	SHC	PI	TC	SHC	PI	TC	SHC	PI	TC	SHC	PI	TC	SHC	PI	TC	SHC	PI
1.2+2.5	16	2376	0	1228	3762	0	1262	4289	0	1315	4640	0	1351	5650	0	1512	6673	0	1532	7280	0	1574	8402	0	1652
	18	2343	0	1245	3729	0	1278	4248	0	1343	4594	0	1386	5590	0	1550	6640	0	1610	7253	0	1643	8369	0	1730
	20	2310	0	1262	3696	0	1295	4211	0	1365	4554	0	1411	5544	0	1577	5700	0	1450	7095	0	1718	8316	0	1809
	22	2277	0	1278	3663	0	1311	4158	0	1393	4488	0	1448	5485	0	1615	6560	0	1726	7174	0	1781	8276	0	1884
	24	2244	0	1295	3630	0	1328	4121	0	1421	4448	0	1482	5438	0	1653	6521	0	1793	7135	0	1849	8158	0	1960
1.2+3.5	16	2376	0	1228	3762	0	1262	4289	0	1315	4640	0	1351	5650	0	1512	6673	0	1532	7280	0	1574	8402	0	1652
	18	2343	0	1245	3729	0	1278	4248	0	1343	4594	0	1386	5590	0	1550	6640	0	1610	7253	0	1643	8369	0	1730
	20	2310	0	1262	3696	0	1295	4211	0	1365	4554	0	1411	5544	0	1577	6600	0	1660	7095	0	1718	8316	0	1809
	22	2277	0	1278	3663	0	1311	4158	0	1393	4488	0	1448	5485	0	1615	6560	0	1726	7174	0	1781	8276	0	1884
	24	2244	0	1295	3630	0	1328	4121	0	1421	4448	0	1482	5438	0	1653	6521	0	1793	7135	0	1849	8158	0	1960
1.2+5.0	16	2376	0	1228	3762	0	1262	4289	0	1315	4640	0	1351	5650	0	1512	6673	0	1532	7280	0	1574	8402	0	1652
	18	2343	0	1245	3729	0	1278	4248	0	1343	4594	0	1386	5590	0	1550	6640	0	1610	7253	0	1643	8369	0	1730
	20	2310	0	1262	3696	0	1295	4211	0	1365	4554	0	1411	5544	0	1577	6800	0	1790	7095	0	1718	8316	0	1809
	22	2277	0	1278	3663	0	1311	4158	0	1393	4488	0	1448	5485	0	1615	6560	0	1726	7174	0	1781	8276	0	1884
	24	2244	0	1295	3630	0	1328	4121	0	1421	4448	0	1482	5438	0	1653	6521	0	1793	7135	0	1849	8158	0	1960
1.8+1.8	16	2376	0	1228	3762	0	1262	4289	0	1315	4640	0	1351	5650	0	1512	6673	0	1532	7280	0	1574	8402	0	1652
	18	2343	0	1245	3729	0	1278	4248	0	1343	4594	0	1386	5590	0	1550	6640	0	1610	7253	0	1643	8369	0	1730
	20	2310	0	1262	3696	0	1295	4211	0	1365	4554	0	1411	5544	0	1577	5000	0	1290	7095	0	1718	8316	0	1809
	22	2277	0	1278	3663	0	1311	4158	0	1393	4488	0	1448	5485	0	1615	6560	0	1726	7174	0	1781	8276	0	1884
	24	2244	0	1295	3630	0	1328	4121	0	1421	4448	0	1482	5438	0	1653	6521	0	1793	7135	0	1849	8158	0	1960
1.8+2.5	16	2304	0	1258	3648	0	1292	4159	0	1347	4499	0	1384	5478	0	1549	6470	0	1569	7059	0	1612	8147	0	1692
	18	2272	0	1275	3616	0	1309	4119	0	1375	4454	0	1420	5421	0	1588	6438	0	1649	7034	0	1683	8115	0	1771
	20	2240	0	1292	3584	0	1326	4083	0	1397	4416	0	1445	5376	0	1615	6400	0	1700	6880	0	1760	8064	0	1853
	22	2208	0	1309	3552	0	1343	4032	0	1427	4352	0	1482	5318	0	1654	6362	0	1768	6957	0	1824	8026	0	1930
	24	2176	0	1326	3520	0	1360	3996	0	1455	4314	0	1518	5274	0	1693	6323	0	1836	6918	0	1894	7910	0	2008
1.8+3.5	16	2448	0	1369	3876	0	1360	4419	0	1448	4780	0	1506	5821	0	1685	6875	0	1708	7500	0	1754	8656	0	1841
	18	2414	0	1388	3842	0	1378	4376	0	1478	4733	0	1545	5760	0	1728	6841	0	1795	7473	0	1832	8622	0	1928
	20	2380	0	1406	3808	0	1396	4338	0	1502	4692	0	1573	5712	0	1758	6800	0	1850	7310	0	1915	8568	0	2017
	22	2346	0	1425	3774	0	1414	4284	0	1534	4624	0	1613	5651	0	1800	6759	0	1924	7392	0	1985	8527	0	2100
	24	2312	0	1443	3740	0	1432	4246	0	1564	4583	0	1652	5603	0	1843	6718	0	1998	7351	0	2061	8405	0	2185
1.8+5.0	16	2448	0	1347	3876	0	1383	4419	0	1442	4780	0	1481	5821	0	1658	6875	0	1680	7500	0	1725	8656	0	1811
	18	2414	0	1365	3842	0	1401	4376	0	1472	4733	0	1520	5760	0	1700	6841	0	1765	7473	0	1802	8622	0	1896
	20	2380	0	1383	3808	0	1420	4338	0	1496	4692	0	1547	5712	0	1729	6800	0	1820	7310	0	1884	8568	0	1984
	22	2346	0	1401	3774	0	1438	4284	0	1527	4624	0	1587	5651	0	1771	6759	0	1893	7392	0	1953	8527	0	2066
	24	2312	0	1420	3740	0	1456	4246	0	1558	4583	0	1625	5603	0	1813	6718	0	1966	7351	0	2027	8405	0	2149
2.5+2.5	16	2448	0	1395	3876	0	1433	4419	0	1494	4780	0	1534	5821	0	1717	6875	0	1740	7500	0	1787	8656	0	1876
	18	2414	0	1414	3842	0	1451	4376	0	1525	4733	0	1574	5760	0	1761	6841	0	1828	7473	0	1866	8622	0	1964
	20	2380	0	1433	3808	0	1470	4338	0	1549	4692	0	1602	5712	0	1791	6800	0	1885	7310	0	1951	8568	0	2055
	22	2346	0	1451	3774	0	1489	4284	0	1582	4624	0	1644	5651	0	1834	6759	0	1960	7392	0	2023	8527	0	2139
	24	2312	0	1470	3740	0	1508	4246	0	1613	4583	0	1683	5603	0	1877	6718	0	2036	7351	0	2100	8405	0	2226

EWB : Evaporator Wet Bulb temperature (°C)

EDB : Evaporator Dry Bulb temperature (°C)

(°CDB) : Outdoor Unit Inlet Air Dry Temperature (°C)

TC : Total Capacity (W)

SHC : Sensible Heating Capacity (W)

PI : Power Input

	INDOOR	OUTDOOR TEMPERATURE (°CDB)																							
	EDB	-15			-10			-7			-5			0			7			10			15		
	°C	TC	SHC	PI	TC	SHC	PI	TC	SHC	PI	TC	SHC	PI	TC	SHC	PI	TC	SHC	PI	TC	SHC	PI	TC	SHC	PI
2.5+3.5	16	2448	0	1347	3876	0	1383	4419	0	1442	4780	0	1481	5821	0	1658	6875	0	1680	7500	0	1725	8656	0	1811
	18	2414	0	1365	3842	0	1401	4376	0	1472	4733	0	1520	5760	0	1700	6841	0	1765	7473	0	1802	8622	0	1896
	20	2380	0	1383	3808	0	1420	4338	0	1496	4692	0	1547	5712	0	1729	6800	0	1820	7310	0	1884	8568	0	1984
	22	2346	0	1401	3774	0	1438	4284	0	1527	4624	0	1587	5651	0	1771	6759	0	1893	7392	0	1953	8527	0	2066
	24	2312	0	1420	3740	0	1456	4246	0	1558	4583	0	1625	5603	0	1813	6718	0	1966	7351	0	2027	8405	0	2149
3.5+3.5	16	2448	0	1325	3876	0	1360	4419	0	1418	4780	0	1457	5821	0	1631	6875	0	1652	7500	0	1697	8656	0	1781
	18	2414	0	1343	3842	0	1378	4376	0	1448	4733	0	1495	5760	0	1672	6841	0	1736	7473	0	1772	8622	0	1865
	20	2380	0	1360	3808	0	1396	4338	0	1471	4692	0	1522	5712	0	1701	6800	0	1790	7310	0	1853	8568	0	1951
	22	2346	0	1378	3774	0	1414	4284	0	1502	4624	0	1561	5651	0	1742	6759	0	1862	7392	0	1921	8527	0	2032
	24	2312	0	1396	3740	0	1432	4246	0	1532	4583	0	1598	5603	0	1783	6718	0	1933	7351	0	1994	8405	0	2114
2.5+5.0	16	2448	0	1325	3876	0	1360	4419	0	1418	4780	0	1457	5821	0	1631	6875	0	1652	7500	0	1697	8656	0	1781
	18	2414	0	1343	3842	0	1378	4376	0	1448	4733	0	1495	5760	0	1672	6841	0	1736	7473	0	1772	8622	0	1865
	20	2380	0	1360	3808	0	1396	4338	0	1471	4692	0	1522	5712	0	1701	6800	0	1790	7310	0	1853	8568	0	1951
	22	2346	0	1378	3774	0	1414	4284	0	1502	4624	0	1561	5651	0	1742	6759	0	1862	7392	0	1921	8527	0	2032
	24	2312	0	1396	3740	0	1432	4246	0	1532	4583	0	1598	5603	0	1783	6718	0	1933	7351	0	1994	8405	0	2114
2.5+5.0	16	2448	0	1325	3876	0	1360	4419	0	1418	4780	0	1457	5821	0	1631	6875	0	1652	7500	0	1697	8656	0	1781
	18	2414	0	1343	3842	0	1378	4376	0	1448	4733	0	1495	5760	0	1672	6841	0	1736	7473	0	1772	8622	0	1865
	20	2380	0	1360	3808	0	1396	4338	0	1471	4692	0	1522	5712	0	1701	6800	0	1790	7310	0	1853	8568	0	1951
	22	2346	0	1378	3774	0	1414	4284	0	1502	4624	0	1561	5651	0	1742	6759	0	1862	7392	0	1921	8527	0	2032
	24	2312	0	1396	3740	0	1432	4246	0	1532	4583	0	1598	5603	0	1783	6718	0	1933	7351	0	1994	8405	0	2114

EWB : Evaporator Wet Bulb temperature (°C)
EDB : Evaporator Dry Bulb temperature (°C)
(°CDB) : Outdoor Unit Inlet Air Dry Temperature (°C)

TC : Total Capacity (W)
SHC : Sensible Heating Capacity (W)
PI : Power Input

4.2.9. RAM-53NP3A

COOLING [50Hz, 230V]

	INDOOR		OUTDOOR TEMPERATURE (°CDB)																				
	EWB	EDB	-10			21			27			32			35			40			43		
	°C	°C	TC	SHC	PI	TC	SHC	PI	TC	SHC	PI	TC	SHC	PI	TC	SHC	PI	TC	SHC	PI	TC	SHC	PI
RAM-53NP3A	12.0	18	3444	2209	724	4524	3417	998	4187	3154	1176	4264	3231	1403	4108	3089	1464	3848	2911	1571	3692	2769	1632
	14.0	20	3444	2209	724	4861	3417	998	4524	3187	1190	4576	3231	1418	4420	3124	1479	4108	2911	1586	3952	2805	1662
	16.0	22	3444	2351	736	5198	3417	1011	4813	3187	1203	4888	3231	1434	4732	3124	1510	4420	2911	1617	4264	2805	1678
	18.0	25	3693	2521	747	5535	3713	1024	5102	3450	1217	5200	3515	1449	4992	3373	1510	4680	3160	1632	4472	3018	1693
	19.0	27	3817	2606	758	5727	3910	1037	5294	3614	1231	5408	3692	1464	5200	3550	1525	4888	3337	1632	4680	3195	1693
	22.0	30	4232	2578	758	6353	3877	1037	5872	3581	1231	5980	3657	1479	5772	3515	1540	5200	3408	1693	4836	3337	1784
	24.0	32	4522	2578	769	6786	3877	1050	6257	3581	1245	6396	3657	1479	6136	3515	1556	5408	3479	1739	4940	3444	1845
1.8	12.0	18	1192	818	235	1566	1265	324	1449	1168	382	1476	1196	455	1422	1143	475	1332	1077	510	1278	1025	530
	14.0	20	1192	818	235	1683	1265	324	1566	1180	386	1584	1196	460	1530	1156	480	1422	1077	515	1368	1038	540
	16.0	22	1192	870	239	1799	1265	328	1666	1180	391	1692	1196	465	1638	1156	490	1530	1077	525	1476	1038	545
	18.0	25	1278	933	242	1916	1374	332	1766	1277	395	1800	1301	470	1728	1248	490	1620	1169	530	1548	1117	549
	19.0	27	1321	965	246	1982	1447	337	1833	1338	400	1872	1367	475	1800	1314	495	1692	1235	530	1620	1183	549
	22.0	30	1465	954	246	2199	1435	337	2032	1326	400	2070	1353	480	1998	1301	500	1800	1261	549	1674	1235	579
	24.0	32	1565	954	250	2349	1435	341	2166	1326	404	2214	1353	480	2124	1301	505	1872	1288	564	1710	1275	599
2.5	12.0	18	1656	1136	332	2175	1757	458	2013	1622	540	2050	1661	644	1975	1588	672	1850	1497	721	1775	1424	749
	14.0	20	1656	1136	332	2337	1757	458	2175	1638	546	2200	1661	651	2125	1606	679	1975	1497	728	1900	1442	763
	16.0	22	1656	1209	338	2499	1757	464	2314	1638	552	2350	1661	658	2275	1606	693	2125	1497	742	2050	1442	770
	18.0	25	1775	1296	343	2661	1909	470	2453	1774	559	2500	1807	665	2400	1734	693	2250	1624	749	2150	1551	777
	19.0	27	1835	1340	348	2753	2010	476	2545	1858	565	2600	1898	672	2500	1825	700	2350	1716	749	2250	1643	777
	22.0	30	2035	1325	348	3054	1993	476	2823	1841	565	2875	1880	679	2775	1807	707	2500	1752	777	2325	1716	819
	24.0	32	2174	1325	353	3263	1993	482	3008	1841	571	3075	1880	679	2950	1807	714	2600	1789	798	2375	1770	847
3.5	12.0	18	2318	1590	489	3045	2459	674	2818	2270	794	2870	2325	948	2765	2223	989	2590	2095	1061	2485	1993	1102
	14.0	20	2318	1590	489	3272	2459	674	3045	2294	803	3080	2325	958	2975	2248	999	2765	2095	1071	2660	2018	1123
	16.0	22	2318	1692	497	3499	2459	683	3239	2294	813	3290	2325	968	3185	2248	1020	2975	2095	1092	2870	2018	1133
	18.0	25	2485	1814	504	3725	2672	692	3434	2483	822	3500	2529	979	3360	2427	1020	3150	2274	1102	3010	2172	1143
	19.0	27	2569	1875	512	3855	2814	700	3563	2601	831	3640	2657	989	3500	2555	1030	3290	2402	1102	3150	2300	1143
	22.0	30	2848	1855	512	4276	2790	700	3952	2578	831	4025	2632	999	3885	2529	1040	3500	2453	1143	3255	2402	1205
	24.0	32	3044	1855	520	4568	2790	709	4211	2578	841	4305	2632	999	4130	2529	1051	3640	2504	1174	3325	2478	1246
5.0	12.0	18	3311	2272	717	4350	3513	988	4026	3243	1164	4100	3322	1389	3950	3176	1450	3700	2993	1555	3550	2847	1616
	14.0	20	3311	2272	717	4674	3513	988	4350	3277	1178	4400	3322	1404	4250	3212	1465	3950	2993	1570	3800	2884	1646
	16.0	22	3311	2417	728	4998	3513	1001	4628	3277	1192	4700	3322	1419	4550	3212	1495	4250	2993	1601	4100	2884	1661
	18.0	25	3551	2592	739	5322	3817	1014	4905	3547	1205	5000	3614	1435	4800	3468	1495	4500	3249	1616	4300	3103	1676
	19.0	27	3670	2679	751	5507	4020	1027	5090	3716	1219	5200	3796	1450	5000	3650	1510	4700	3431	1616	4500	3285	1676
	22.0	30	4069	2650	751	6109	3986	1027	5646	3682	1219	5750	3760	1465	5550	3614	1525	5000	3504	1676	4650	3431	1767
	24.0	32	4348	2650	762	6525	3986	1040	6016	3682	1233	6150	3760	1465	5900	3614	1540	5200	3577	1721	4750	3541	1827
1.8+1.8	12.0	18	2384	1636	482	3132	2530	664	2899	2335	783	2952	2391	934	2844	2286	974	2664	2155	1045	2556	2050	1086
	14.0	20	2384	1636	482	3365	2530	664	3132	2359	792	3168	2391	944	3060	2313	985	2844	2155	1056	2736	2076	1106
	16.0	22	2384	1740	490	3598	2530	673	3332	2359	801	3384	2391	954	3276	2313	1005	3060	2155	1076	2952	2076	1117
	18.0	25	2556	1866	497	3832	2748	681	3532	2554	810	3600	2602	964	3456	2497	1005	3240	2339	1086	3096	2234	1127
	19.0	27	2643	1929	505	3965	2894	690	3665	2676	819	3744	2733	974	3600	2628	1015	3384	2470	1086	3240	2365	1127
	22.0	30	2930	1908	505	4398	2870	690	4065	2651	819	4140	2707	985	3996	2602	1025	3600	2523	1127	3348	2470	1188
	24.0	32	3131	1908	512	4698	2870	699	4331	2651	829	4428	2707	985	4248	2602	1035	3744	2575	1157	3420	2549	1228

	INDOOR		OUTDOOR TEMPERATURE (°CDB)																				
	EWB	EDB	-10			21			27			32			35			40			43		
	°C	°C	TC	SHC	PI	TC	SHC	PI	TC	SHC	PI	TC	SHC	PI	TC	SHC	PI	TC	SHC	PI	TC	SHC	PI
1.8+2.5	12.0	18	2781	1908	554	3654	2951	763	3382	2724	900	3444	2790	1074	3318	2667	1120	3108	2514	1202	2982	2391	1249
	14.0	20	2781	1908	554	3926	2951	763	3654	2753	910	3696	2790	1085	3570	2698	1132	3318	2514	1214	3192	2422	1272
	16.0	22	2781	2030	563	4198	2951	773	3887	2753	921	3948	2790	1097	3822	2698	1155	3570	2514	1237	3444	2422	1284
	18.0	25	2982	2177	572	4470	3207	784	4120	2980	931	4200	3035	1109	4032	2913	1155	3780	2729	1249	3612	2606	1295
	19.0	27	3083	2251	580	4626	3377	794	4276	3121	942	4368	3189	1120	4200	3066	1167	3948	2882	1249	3780	2759	1295
	22.0	30	3418	2226	580	5131	3348	794	4742	3093	942	4830	3158	1132	4662	3035	1179	4200	2943	1295	3906	2882	1365
	24.0	32	3653	2226	589	5481	3348	804	5053	3093	953	5166	3158	1132	4956	3035	1190	4368	3005	1330	3990	2974	1412
1.8+3.5	12.0	18	3311	2272	699	4350	3513	963	4026	3243	1135	4100	3322	1354	3950	3176	1413	3700	2993	1516	3550	2847	1575
	14.0	20	3311	2272	699	4674	3513	963	4350	3277	1148	4400	3322	1369	4250	3212	1428	3950	2993	1531	3800	2884	1604
	16.0	22	3311	2417	710	4998	3513	976	4628	3277	1162	4700	3322	1384	4550	3212	1457	4250	2993	1560	4100	2884	1619
	18.0	25	3551	2592	721	5322	3817	988	4905	3547	1175	5000	3614	1398	4800	3468	1457	4500	3249	1575	4300	3103	1634
	19.0	27	3670	2679	732	5507	4020	1001	5090	3716	1188	5200	3796	1413	5000	3650	1472	4700	3431	1575	4500	3285	1634
	22.0	30	4069	2650	732	6109	3986	1001	5646	3682	1188	5750	3760	1428	5550	3614	1487	5000	3504	1634	4650	3431	1722
	24.0	32	4348	2650	743	6525	3986	1014	6016	3682	1202	6150	3760	1428	5900	3614	1501	5200	3577	1678	4750	3541	1781
1.8+5.0	12.0	18	3444	2362	712	4524	3654	981	4187	3373	1156	4264	3454	1380	4108	3303	1440	3848	3113	1545	3692	2961	1605
	14.0	20	3444	2362	712	4861	3654	981	4524	3408	1170	4576	3454	1395	4420	3340	1455	4108	3113	1560	3952	2999	1635
	16.0	22	3444	2514	723	5198	3654	994	4813	3408	1184	4888	3454	1410	4732	3340	1485	4420	3113	1590	4264	2999	1650
	18.0	25	3693	2696	735	5535	3970	1007	5102	3689	1197	5200	3758	1425	4992	3606	1485	4680	3378	1605	4472	3227	1665
	19.0	27	3817	2786	746	5727	4181	1020	5294	3865	1211	5408	3948	1440	5200	3796	1500	4888	3568	1605	4680	3416	1665
	22.0	30	4232	2756	746	6353	4146	1020	5872	3830	1211	5980	3910	1455	5772	3758	1515	5200	3644	1665	4836	3568	1755
	24.0	32	4522	2756	757	6786	4146	1033	6257	3830	1224	6396	3910	1455	6136	3758	1530	5408	3720	1710	4940	3682	1815
2.5+2.5	12.0	18	3311	2272	699	4350	3513	963	4026	3243	1135	4100	3322	1354	3950	3176	1413	3700	2993	1516	3550	2847	1575
	14.0	20	3311	2272	699	4674	3513	963	4350	3277	1148	4400	3322	1369	4250	3212	1428	3950	2993	1531	3800	2884	1604
	16.0	22	3311	2417	710	4998	3513	976	4628	3277	1162	4700	3322	1384	4550	3212	1457	4250	2993	1560	4100	2884	1619
	18.0	25	3551	2592	721	5322	3817	988	4905	3547	1175	5000	3614	1398	4800	3468	1457	4500	3249	1575	4300	3103	1634
	19.0	27	3670	2679	732	5507	4020	1001	5090	3716	1188	5200	3796	1413	5000	3650	1472	4700	3431	1575	4500	3285	1634
	22.0	30	4069	2650	732	6109	3986	1001	5646	3682	1188	5750	3760	1428	5550	3614	1487	5000	3504	1634	4650	3431	1722
	24.0	32	4348	2650	743	6525	3986	1014	6016	3682	1202	6150	3760	1428	5900	3614	1501	5200	3577	1678	4750	3541	1781
2.5+3.5	12.0	18	3444	2362	712	4524	3654	981	4187	3373	1156	4264	3454	1380	4108	3303	1440	3848	3113	1545	3692	2961	1605
	14.0	20	3444	2362	712	4861	3654	981	4524	3408	1170	4576	3454	1395	4420	3340	1455	4108	3113	1560	3952	2999	1635
	16.0	22	3444	2514	723	5198	3654	994	4813	3408	1184	4888	3454	1410	4732	3340	1485	4420	3113	1590	4264	2999	1650
	18.0	25	3693	2696	735	5535	3970	1007	5102	3689	1197	5200	3758	1425	4992	3606	1485	4680	3378	1605	4472	3227	1665
	19.0	27	3817	2786	746	5727	4181	1020	5294	3865	1211	5408	3948	1440	5200	3796	1500	4888	3568	1605	4680	3416	1665
	22.0	30	4232	2756	746	6353	4146	1020	5872	3830	1211	5980	3910	1455	5772	3758	1515	5200	3644	1665	4836	3568	1755
	24.0	32	4522	2756	757	6786	4146	1033	6257	3830	1224	6396	3910	1455	6136	3758	1530	5408	3720	1710	4940	3682	1815
3.5+3.5	12.0	18	3444	2362	712	4524	3654	981	4187	3373	1156	4264	3454	1380	4108	3303	1440	3848	3113	1545	3692	2961	1605
	14.0	20	3444	2362	712	4861	3654	981	4524	3408	1170	4576	3454	1395	4420	3340	1455	4108	3113	1560	3952	2999	1635
	16.0	22	3444	2514	723	5198	3654	994	4813	3408	1184	4888	3454	1410	4732	3340	1485	4420	3113	1590	4264	2999	1650
	18.0	25	3693	2696	735	5535	3970	1007	5102	3689	1197	5200	3758	1425	4992	3606	1485	4680	3378	1605	4472	3227	1665
	19.0	27	3817	2786	746	5727	4181	1020	5294	3865	1211	5408	3948	1440	5200	3796	1500	4888	3568	1605	4680	3416	1665
	22.0	30	4232	2756	746	6353	4146	1020	5872	3830	1211	5980	3910	1455	5772	3758	1515	5200	3644	1665	4836	3568	1755
	24.0	32	4522	2756	757	6786	4146	1033	6257	3830	1224	6396	3910	1455	6136	3758	1530	5408	3720	1710	4940	3682	1815

	INDOOR		OUTDOOR TEMPERATURE (°CDB)																				
	EWB	EDB	-10			21			27			32			35			40			43		
	°C	°C	TC	SHC	PI	TC	SHC	PI	TC	SHC	PI	TC	SHC	PI	TC	SHC	PI	TC	SHC	PI	TC	SHC	PI
2.5+5.0	12.0	18	3444	2362	712	4524	3654	981	4187	3373	1156	4264	3454	1380	4108	3303	1440	3848	3113	1545	3692	2961	1605
	14.0	20	3444	2362	712	4861	3654	981	4524	3408	1170	4576	3454	1395	4420	3340	1455	4108	3113	1560	3952	2999	1635
	16.0	22	3444	2514	723	5198	3654	994	4813	3408	1184	4888	3454	1410	4732	3340	1485	4420	3113	1590	4264	2999	1650
	18.0	25	3693	2696	735	5535	3970	1007	5102	3689	1197	5200	3758	1425	4992	3606	1485	4680	3378	1605	4472	3227	1665
	19.0	27	3817	2786	746	5727	4181	1020	5294	3865	1211	5408	3948	1440	5200	3796	1500	4888	3568	1605	4680	3416	1665
	22.0	30	4232	2756	746	6353	4146	1020	5872	3830	1211	5980	3910	1455	5772	3758	1515	5200	3644	1665	4836	3568	1755
	24.0	32	4522	2756	757	6786	4146	1033	6257	3830	1224	6396	3910	1455	6136	3758	1530	5408	3720	1710	4940	3682	1815
3.5+5.0	12.0	18	3444	2362	712	4524	3654	981	4187	3373	1156	4264	3454	1380	4108	3303	1440	3848	3113	1545	3692	2961	1605
	14.0	20	3444	2362	712	4861	3654	981	4524	3408	1170	4576	3454	1395	4420	3340	1455	4108	3113	1560	3952	2999	1635
	16.0	22	3444	2514	723	5198	3654	994	4813	3408	1184	4888	3454	1410	4732	3340	1485	4420	3113	1590	4264	2999	1650
	18.0	25	3693	2696	735	5535	3970	1007	5102	3689	1197	5200	3758	1425	4992	3606	1485	4680	3378	1605	4472	3227	1665
	19.0	27	3817	2786	746	5727	4181	1020	5294	3865	1211	5408	3948	1440	5200	3796	1500	4888	3568	1605	4680	3416	1665
	22.0	30	4232	2756	746	6353	4146	1020	5872	3830	1211	5980	3910	1455	5772	3758	1515	5200	3644	1665	4836	3568	1755
	24.0	32	4522	2756	757	6786	4146	1033	6257	3830	1224	6396	3910	1455	6136	3758	1530	5408	3720	1710	4940	3682	1815
1.8+1.8+1.8	12.0	18	3444	2362	724	4524	3654	998	4187	3373	1176	4264	3454	1403	4108	3303	1464	3848	3113	1571	3692	2961	1632
	14.0	20	3444	2362	724	4861	3654	998	4524	3408	1190	4576	3454	1418	4420	3340	1479	4108	3113	1586	3952	2999	1662
	16.0	22	3444	2514	736	5198	3654	1011	4813	3408	1203	4888	3454	1434	4732	3340	1510	4420	3113	1617	4264	2999	1678
	18.0	25	3693	2696	747	5535	3970	1024	5102	3689	1217	5200	3758	1449	4992	3606	1510	4680	3378	1632	4472	3227	1693
	19.0	27	3817	2786	758	5727	4181	1037	5294	3865	1231	5408	3948	1464	5200	3796	1525	4888	3568	1632	4680	3416	1693
	22.0	30	4232	2756	758	6353	4146	1037	5872	3830	1231	5980	3910	1479	5772	3758	1540	5200	3644	1693	4836	3568	1784
	24.0	32	4522	2756	769	6786	4146	1050	6257	3830	1245	6396	3910	1479	6136	3758	1556	5408	3720	1739	4940	3682	1845
1.8+1.8+2.5	12.0	18	3444	2201	724	4524	3404	998	4187	3142	1176	4264	3218	1403	4108	3076	1464	3848	2900	1571	3692	2758	1632
	14.0	20	3444	2201	724	4861	3404	998	4524	3175	1190	4576	3218	1418	4420	3112	1479	4108	2900	1586	3952	2793	1662
	16.0	22	3444	2342	736	5198	3404	1011	4813	3175	1203	4888	3218	1434	4732	3112	1510	4420	2900	1617	4264	2793	1678
	18.0	25	3693	2511	747	5535	3698	1024	5102	3436	1217	5200	3501	1449	4992	3359	1510	4680	3147	1632	4472	3006	1693
	19.0	27	3817	2596	758	5727	3894	1037	5294	3600	1231	5408	3677	1464	5200	3536	1525	4888	3324	1632	4680	3182	1693
	22.0	30	4232	2567	758	6353	3862	1037	5872	3567	1231	5980	3642	1479	5772	3501	1540	5200	3395	1693	4836	3324	1784
	24.0	32	4522	2567	769	6786	3862	1050	6257	3567	1245	6396	3642	1479	6136	3501	1556	5408	3465	1739	4940	3430	1845
1.8+1.8+3.5	12.0	18	3444	2201	724	4524	3404	998	4187	3142	1176	4264	3218	1403	4108	3076	1464	3848	2900	1571	3692	2758	1632
	14.0	20	3444	2201	724	4861	3404	998	4524	3175	1190	4576	3218	1418	4420	3112	1479	4108	2900	1586	3952	2793	1662
	16.0	22	3444	2342	736	5198	3404	1011	4813	3175	1203	4888	3218	1434	4732	3112	1510	4420	2900	1617	4264	2793	1678
	18.0	25	3693	2511	747	5535	3698	1024	5102	3436	1217	5200	3501	1449	4992	3359	1510	4680	3147	1632	4472	3006	1693
	19.0	27	3817	2596	758	5727	3894	1037	5294	3600	1231	5408	3677	1464	5200	3536	1525	4888	3324	1632	4680	3182	1693
	22.0	30	4232	2567	758	6353	3862	1037	5872	3567	1231	5980	3642	1479	5772	3501	1540	5200	3395	1693	4836	3324	1784
	24.0	32	4522	2567	769	6786	3862	1050	6257	3567	1245	6396	3642	1479	6136	3501	1556	5408	3465	1739	4940	3430	1845
1.8+1.8+5.0	12.0	18	3444	2201	724	4524	3404	998	4187	3142	1176	4264	3218	1403	4108	3076	1464	3848	2900	1571	3692	2758	1632
	14.0	20	3444	2201	724	4861	3404	998	4524	3175	1190	4576	3218	1418	4420	3112	1479	4108	2900	1586	3952	2793	1662
	16.0	22	3444	2342	736	5198	3404	1011	4813	3175	1203	4888	3218	1434	4732	3112	1510	4420	2900	1617	4264	2793	1678
	18.0	25	3693	2511	747	5535	3698	1024	5102	3436	1217	5200	3501	1449	4992	3359	1510	4680	3147	1632	4472	3006	1693
	19.0	27	3817	2596	758	5727	3894	1037	5294	3600	1231	5408	3677	1464	5200	3536	1525	4888	3324	1632	4680	3182	1693
	22.0	30	4232	2567	758	6353	3862	1037	5872	3567	1231	5980	3642	1479	5772	3501	1540	5200	3395	1693	4836	3324	1784
	24.0	32	4522	2567	769	6786	3862	1050	6257	3567	1245	6396	3642	1479	6136	3501	1556	5408	3465	1739	4940	3430	1845

	INDOOR		OUTDOOR TEMPERATURE (°CDB)																				
	EWB	EDB	-10			21			27			32			35			40			43		
	°C	°C	TC	SHC	PI	TC	SHC	PI	TC	SHC	PI	TC	SHC	PI	TC	SHC	PI	TC	SHC	PI	TC	SHC	PI
1.8+2.5+2.5	12.0	18	3444	2201	724	4524	3404	998	4187	3142	1176	4264	3218	1403	4108	3076	1464	3848	2900	1571	3692	2758	1632
	14.0	20	3444	2201	724	4861	3404	998	4524	3175	1190	4576	3218	1418	4420	3112	1479	4108	2900	1586	3952	2793	1662
	16.0	22	3444	2342	736	5198	3404	1011	4813	3175	1203	4888	3218	1434	4732	3112	1510	4420	2900	1617	4264	2793	1678
	18.0	25	3693	2511	747	5535	3698	1024	5102	3436	1217	5200	3501	1449	4992	3359	1510	4680	3147	1632	4472	3006	1693
	19.0	27	3817	2596	758	5727	3894	1037	5294	3600	1231	5408	3677	1464	5200	3536	1525	4888	3324	1632	4680	3182	1693
	22.0	30	4232	2567	758	6353	3862	1037	5872	3567	1231	5980	3642	1479	5772	3501	1540	5200	3395	1693	4836	3324	1784
	24.0	32	4522	2567	769	6786	3862	1050	6257	3567	1245	6396	3642	1479	6136	3501	1556	5408	3465	1739	4940	3430	1845
1.8+2.5+3.5	12.0	18	3444	2201	724	4524	3404	998	4187	3142	1176	4264	3218	1403	4108	3076	1464	3848	2900	1571	3692	2758	1632
	14.0	20	3444	2201	724	4861	3404	998	4524	3175	1190	4576	3218	1418	4420	3112	1479	4108	2900	1586	3952	2793	1662
	16.0	22	3444	2342	736	5198	3404	1011	4813	3175	1203	4888	3218	1434	4732	3112	1510	4420	2900	1617	4264	2793	1678
	18.0	25	3693	2511	747	5535	3698	1024	5102	3436	1217	5200	3501	1449	4992	3359	1510	4680	3147	1632	4472	3006	1693
	19.0	27	3817	2596	758	5727	3894	1037	5294	3600	1231	5408	3677	1464	5200	3536	1525	4888	3324	1632	4680	3182	1693
	22.0	30	4232	2567	758	6353	3862	1037	5872	3567	1231	5980	3642	1479	5772	3501	1540	5200	3395	1693	4836	3324	1784
	24.0	32	4522	2567	769	6786	3862	1050	6257	3567	1245	6396	3642	1479	6136	3501	1556	5408	3465	1739	4940	3430	1845
1.8+3.5+3.5	12.0	18	3444	2201	724	4524	3404	998	4187	3142	1176	4264	3218	1403	4108	3076	1464	3848	2900	1571	3692	2758	1632
	14.0	20	3444	2201	724	4861	3404	998	4524	3175	1190	4576	3218	1418	4420	3112	1479	4108	2900	1586	3952	2793	1662
	16.0	22	3444	2342	736	5198	3404	1011	4813	3175	1203	4888	3218	1434	4732	3112	1510	4420	2900	1617	4264	2793	1678
	18.0	25	3693	2511	747	5535	3698	1024	5102	3436	1217	5200	3501	1449	4992	3359	1510	4680	3147	1632	4472	3006	1693
	19.0	27	3817	2596	758	5727	3894	1037	5294	3600	1231	5408	3677	1464	5200	3536	1525	4888	3324	1632	4680	3182	1693
	22.0	30	4232	2567	758	6353	3862	1037	5872	3567	1231	5980	3642	1479	5772	3501	1540	5200	3395	1693	4836	3324	1784
	24.0	32	4522	2567	769	6786	3862	1050	6257	3567	1245	6396	3642	1479	6136	3501	1556	5408	3465	1739	4940	3430	1845
2.5+2.5+2.5	12.0	18	3444	2201	724	4524	3404	998	4187	3142	1176	4264	3218	1403	4108	3076	1464	3848	2900	1571	3692	2758	1632
	14.0	20	3444	2201	724	4861	3404	998	4524	3175	1190	4576	3218	1418	4420	3112	1479	4108	2900	1586	3952	2793	1662
	16.0	22	3444	2342	736	5198	3404	1011	4813	3175	1203	4888	3218	1434	4732	3112	1510	4420	2900	1617	4264	2793	1678
	18.0	25	3693	2511	747	5535	3698	1024	5102	3436	1217	5200	3501	1449	4992	3359	1510	4680	3147	1632	4472	3006	1693
	19.0	27	3817	2596	758	5727	3894	1037	5294	3600	1231	5408	3677	1464	5200	3536	1525	4888	3324	1632	4680	3182	1693
	22.0	30	4232	2567	758	6353	3862	1037	5872	3567	1231	5980	3642	1479	5772	3501	1540	5200	3395	1693	4836	3324	1784
	24.0	32	4522	2567	769	6786	3862	1050	6257	3567	1245	6396	3642	1479	6136	3501	1556	5408	3465	1739	4940	3430	1845
2.5+2.5+3.5	12.0	18	3444	2201	724	4524	3404	998	4187	3142	1176	4264	3218	1403	4108	3076	1464	3848	2900	1571	3692	2758	1632
	14.0	20	3444	2201	724	4861	3404	998	4524	3175	1190	4576	3218	1418	4420	3112	1479	4108	2900	1586	3952	2793	1662
	16.0	22	3444	2342	736	5198	3404	1011	4813	3175	1203	4888	3218	1434	4732	3112	1510	4420	2900	1617	4264	2793	1678
	18.0	25	3693	2511	747	5535	3698	1024	5102	3436	1217	5200	3501	1449	4992	3359	1510	4680	3147	1632	4472	3006	1693
	19.0	27	3817	2596	758	5727	3894	1037	5294	3600	1231	5408	3677	1464	5200	3536	1525	4888	3324	1632	4680	3182	1693
	22.0	30	4232	2567	758	6353	3862	1037	5872	3567	1231	5980	3642	1479	5772	3501	1540	5200	3395	1693	4836	3324	1784
	24.0	32	4522	2567	769	6786	3862	1050	6257	3567	1245	6396	3642	1479	6136	3501	1556	5408	3465	1739	4940	3430	1845

EWB : Evaporator Wet Bulb temperature (°C)
EDB : Evaporator Dry Bulb temperature (°C)
(°CDB) : Outdoor Unit Inlet Air Dry Temperature (°C)

TC : Total Capacity (W)
SHC : Sensible Heating Capacity (W)
PI : Power Input

HEATING [50Hz, 230V]

	INDOOR	OUTDOOR TEMPERATURE (°CDB)																							
	EDB	-15			-10			-7			-5			0			7			10			15		
	°C	TC	SHC	PI	TC	SHC	PI	TC	SHC	PI	TC	SHC	PI	TC	SHC	PI	TC	SHC	PI	TC	SHC	PI	TC	SHC	PI
RAM-53NP3A	16	2448	0	1248	3876	0	1282	4419	0	1337	4780	0	1373	5821	0	1537	6875	0	1557	7500	0	1599	8656	0	1679
	18	2414	0	1265	3842	0	1299	4376	0	1365	4733	0	1409	5760	0	1576	6841	0	1636	7473	0	1670	8622	0	1758
	20	2380	0	1282	3808	0	1316	4338	0	1387	4692	0	1434	5712	0	1603	6800	0	1687	7310	0	1746	8568	0	1839
	22	2346	0	1299	3774	0	1333	4284	0	1416	4624	0	1471	5651	0	1641	6759	0	1754	7392	0	1810	8527	0	1915
	24	2312	0	1316	3740	0	1350	4246	0	1444	4583	0	1506	5603	0	1680	6718	0	1822	7351	0	1879	8405	0	1992
1.8	16	900	0	511	1425	0	524	1625	0	547	1758	0	562	2140	0	629	2528	0	637	2758	0	654	3183	0	687
	18	888	0	518	1413	0	531	1609	0	558	1740	0	576	2118	0	644	2515	0	669	2748	0	683	3170	0	719
	20	875	0	524	1400	0	538	1595	0	567	1725	0	587	2100	0	656	2500	0	690	2688	0	714	3150	0	752
	22	863	0	531	1388	0	545	1575	0	579	1700	0	602	2078	0	671	2485	0	718	2718	0	740	3135	0	783
	24	850	0	538	1375	0	552	1561	0	591	1685	0	616	2060	0	687	2470	0	745	2703	0	769	3090	0	815
2.5	16	1404	0	784	2223	0	806	2534	0	840	2742	0	863	3338	0	966	3943	0	978	4302	0	1005	4965	0	1055
	18	1385	0	795	2204	0	816	2510	0	858	2714	0	885	3303	0	990	3923	0	1028	4286	0	1049	4945	0	1105
	20	1365	0	806	2184	0	827	2488	0	871	2691	0	901	3276	0	1007	3900	0	1060	4193	0	1097	4914	0	1155
	22	1346	0	816	2165	0	837	2457	0	890	2652	0	924	3241	0	1031	3877	0	1102	4239	0	1137	4891	0	1203
	24	1326	0	827	2145	0	848	2435	0	907	2629	0	947	3214	0	1056	3853	0	1145	4216	0	1181	4820	0	1252
3.5	16	1728	0	977	2736	0	1003	3119	0	1046	3374	0	1074	4109	0	1203	4853	0	1218	5294	0	1251	6110	0	1313
	18	1704	0	990	2712	0	1016	3089	0	1068	3341	0	1102	4066	0	1233	4829	0	1280	5275	0	1307	6086	0	1375
	20	1680	0	1003	2688	0	1030	3062	0	1085	3312	0	1122	4032	0	1254	4800	0	1320	5160	0	1366	6048	0	1439
	22	1656	0	1016	2664	0	1043	3024	0	1108	3264	0	1151	3989	0	1284	4771	0	1373	5218	0	1416	6019	0	1498
	24	1632	0	1030	2640	0	1056	2997	0	1130	3235	0	1179	3955	0	1315	4742	0	1426	5189	0	1470	5933	0	1559
5	16	2340	0	1332	3705	0	1368	4224	0	1426	4570	0	1465	5564	0	1640	6572	0	1661	7170	0	1706	8275	0	1791
	18	2308	0	1350	3673	0	1386	4183	0	1456	4524	0	1503	5506	0	1681	6539	0	1746	7144	0	1782	8242	0	1876
	20	2275	0	1368	3640	0	1404	4147	0	1480	4485	0	1530	5460	0	1710	6500	0	1800	6988	0	1863	8190	0	1962
	22	2243	0	1386	3608	0	1422	4095	0	1511	4420	0	1570	5402	0	1751	6461	0	1872	7066	0	1931	8151	0	2043
	24	2210	0	1404	3575	0	1440	4059	0	1540	4381	0	1607	5356	0	1793	6422	0	1944	7027	0	2005	8034	0	2126
1.8+1.8	16	1800	0	955	2850	0	980	3249	0	1022	3515	0	1050	4280	0	1175	5055	0	1191	5515	0	1223	6365	0	1284
	18	1775	0	968	2825	0	993	3218	0	1044	3480	0	1077	4235	0	1205	5030	0	1251	5495	0	1277	6340	0	1344
	20	1750	0	980	2800	0	1006	3190	0	1060	3450	0	1097	4200	0	1226	5000	0	1290	5375	0	1335	6300	0	1406
	22	1725	0	993	2775	0	1019	3150	0	1083	3400	0	1125	4155	0	1255	4970	0	1342	5435	0	1384	6270	0	1464
	24	1700	0	1006	2750	0	1032	3122	0	1104	3370	0	1152	4120	0	1285	4940	0	1393	5405	0	1437	6180	0	1523
1.8+2.5	16	2304	0	1258	3648	0	1292	4159	0	1347	4499	0	1384	5478	0	1549	6470	0	1569	7059	0	1612	8147	0	1692
	18	2272	0	1275	3616	0	1309	4119	0	1375	4454	0	1420	5421	0	1588	6438	0	1649	7034	0	1683	8115	0	1771
	20	2240	0	1292	3584	0	1326	4083	0	1397	4416	0	1445	5376	0	1615	6400	0	1700	6880	0	1760	8064	0	1853
	22	2208	0	1309	3552	0	1343	4032	0	1427	4352	0	1482	5318	0	1654	6362	0	1768	6957	0	1824	8026	0	1930
	24	2176	0	1326	3520	0	1360	3996	0	1455	4314	0	1518	5274	0	1693	6323	0	1836	6918	0	1894	7910	0	2008
1.8+3.5	16	2448	0	1369	3876	0	1406	4419	0	1466	4780	0	1506	5821	0	1685	6875	0	1708	7500	0	1754	8656	0	1841
	18	2414	0	1388	3842	0	1425	4376	0	1497	4733	0	1545	5760	0	1728	6841	0	1795	7473	0	1832	8622	0	1928
	20	2380	0	1406	3808	0	1443	4338	0	1521	4692	0	1573	5712	0	1758	6800	0	1850	7310	0	1915	8568	0	2017
	22	2346	0	1425	3774	0	1462	4284	0	1553	4624	0	1613	5651	0	1800	6759	0	1924	7392	0	1985	8527	0	2100
	24	2312	0	1443	3740	0	1480	4246	0	1583	4583	0	1652	5603	0	1843	6718	0	1998	7351	0	2061	8405	0	2185

EWB : Evaporator Wet Bulb temperature (°C)

EDB : Evaporator Dry Bulb temperature (°C)

(°CDB) : Outdoor Unit Inlet Air Dry Temperature (°C)

TC : Total Capacity (W)

SHC : Sensible Heating Capacity (W)

PI : Power Input

	INDOOR	OUTDOOR TEMPERATURE (°CDW)																							
	EDB	-15			-10			-7			-5			0			7			10			15		
	°C	TC	SHC	PI	TC	SHC	PI	TC	SHC	PI	TC	SHC	PI	TC	SHC	PI	TC	SHC	PI	TC	SHC	PI	TC	SHC	PI
1.8+5.0	16	2448	0	1347	3876	0	1383	4419	0	1442	4780	0	1481	5821	0	1658	6875	0	1680	7500	0	1725	8656	0	1811
	18	2414	0	1365	3842	0	1401	4376	0	1472	4733	0	1520	5760	0	1700	6841	0	1765	7473	0	1802	8622	0	1896
	20	2380	0	1383	3808	0	1420	4338	0	1496	4692	0	1547	5712	0	1729	6800	0	1820	7310	0	1884	8568	0	1984
	22	2346	0	1401	3774	0	1438	4284	0	1527	4624	0	1587	5651	0	1771	6759	0	1893	7392	0	1953	8527	0	2066
	24	2312	0	1420	3740	0	1456	4246	0	1558	4583	0	1625	5603	0	1813	6718	0	1966	7351	0	2027	8405	0	2149
2.5+2.5	16	2448	0	1395	3876	0	1433	4419	0	1494	4780	0	1534	5821	0	1717	6875	0	1740	7500	0	1787	8656	0	1876
	18	2414	0	1414	3842	0	1451	4376	0	1525	4733	0	1574	5760	0	1761	6841	0	1828	7473	0	1866	8622	0	1964
	20	2380	0	1433	3808	0	1470	4338	0	1549	4692	0	1602	5712	0	1791	6800	0	1885	7310	0	1951	8568	0	2055
	22	2346	0	1451	3774	0	1489	4284	0	1582	4624	0	1644	5651	0	1834	6759	0	1960	7392	0	2023	8527	0	2139
	24	2312	0	1470	3740	0	1508	4246	0	1613	4583	0	1683	5603	0	1877	6718	0	2036	7351	0	2100	8405	0	2226
2.5+3.5	16	2448	0	1347	3876	0	1383	4419	0	1442	4780	0	1481	5821	0	1658	6875	0	1680	7500	0	1725	8656	0	1811
	18	2414	0	1365	3842	0	1401	4376	0	1472	4733	0	1520	5760	0	1700	6841	0	1765	7473	0	1802	8622	0	1896
	20	2380	0	1383	3808	0	1420	4338	0	1496	4692	0	1547	5712	0	1729	6800	0	1820	7310	0	1884	8568	0	1984
	22	2346	0	1401	3774	0	1438	4284	0	1527	4624	0	1587	5651	0	1771	6759	0	1893	7392	0	1953	8527	0	2066
	24	2312	0	1420	3740	0	1456	4246	0	1558	4583	0	1625	5603	0	1813	6718	0	1966	7351	0	2027	8405	0	2149
3.5+3.5	16	2448	0	1325	3876	0	1360	4419	0	1418	4780	0	1457	5821	0	1631	6875	0	1652	7500	0	1697	8656	0	1781
	18	2414	0	1343	3842	0	1378	4376	0	1448	4733	0	1495	5760	0	1672	6841	0	1736	7473	0	1772	8622	0	1865
	20	2380	0	1360	3808	0	1396	4338	0	1471	4692	0	1522	5712	0	1701	6800	0	1790	7310	0	1853	8568	0	1951
	22	2346	0	1378	3774	0	1414	4284	0	1502	4624	0	1561	5651	0	1742	6759	0	1862	7392	0	1921	8527	0	2032
	24	2312	0	1396	3740	0	1432	4246	0	1532	4583	0	1598	5603	0	1783	6718	0	1933	7351	0	1994	8405	0	2114
2.5+5.0	16	2448	0	1325	3876	0	1360	4419	0	1418	4780	0	1457	5821	0	1631	6875	0	1652	7500	0	1697	8656	0	1781
	18	2414	0	1343	3842	0	1378	4376	0	1448	4733	0	1495	5760	0	1672	6841	0	1736	7473	0	1772	8622	0	1865
	20	2380	0	1360	3808	0	1396	4338	0	1471	4692	0	1522	5712	0	1701	6800	0	1790	7310	0	1853	8568	0	1951
	22	2346	0	1378	3774	0	1414	4284	0	1502	4624	0	1561	5651	0	1742	6759	0	1862	7392	0	1921	8527	0	2032
	24	2312	0	1396	3740	0	1432	4246	0	1532	4583	0	1598	5603	0	1783	6718	0	1933	7351	0	1994	8405	0	2114
3.5+5.0	16	2448	0	1325	3876	0	1360	4419	0	1418	4780	0	1457	5821	0	1631	6875	0	1652	7500	0	1697	8656	0	1781
	18	2414	0	1343	3842	0	1378	4376	0	1448	4733	0	1495	5760	0	1672	6841	0	1736	7473	0	1772	8622	0	1865
	20	2380	0	1360	3808	0	1396	4338	0	1471	4692	0	1522	5712	0	1701	6800	0	1790	7310	0	1853	8568	0	1951
	22	2346	0	1378	3774	0	1414	4284	0	1502	4624	0	1561	5651	0	1742	6759	0	1862	7392	0	1921	8527	0	2032
	24	2312	0	1396	3740	0	1432	4246	0	1532	4583	0	1598	5603	0	1783	6718	0	1933	7351	0	1994	8405	0	2114
1.8+1.8+1.8	16	2448	0	1248	3876	0	1282	4419	0	1337	4780	0	1373	5821	0	1537	6875	0	1557	7500	0	1599	8656	0	1679
	18	2414	0	1265	3842	0	1299	4376	0	1365	4733	0	1409	5760	0	1576	6841	0	1636	7473	0	1670	8622	0	1758
	20	2380	0	1282	3808	0	1316	4338	0	1387	4692	0	1434	5712	0	1603	6800	0	1687	7310	0	1746	8568	0	1839
	22	2346	0	1299	3774	0	1333	4284	0	1416	4624	0	1471	5651	0	1641	6759	0	1754	7392	0	1810	8527	0	1915
	24	2312	0	1316	3740	0	1350	4246	0	1444	4583	0	1506	5603	0	1680	6718	0	1822	7351	0	1879	8405	0	1992
1.8+1.8+2.5	16	2448	0	1248	3876	0	1282	4419	0	1337	4780	0	1373	5821	0	1537	6875	0	1557	7500	0	1599	8656	0	1679
	18	2414	0	1265	3842	0	1299	4376	0	1365	4733	0	1409	5760	0	1576	6841	0	1636	7473	0	1670	8622	0	1758
	20	2380	0	1282	3808	0	1316	4338	0	1387	4692	0	1434	5712	0	1603	6800	0	1687	7310	0	1746	8568	0	1839
	22	2346	0	1299	3774	0	1333	4284	0	1416	4624	0	1471	5651	0	1641	6759	0	1754	7392	0	1810	8527	0	1915
	24	2312	0	1316	3740	0	1350	4246	0	1444	4583	0	1506	5603	0	1680	6718	0	1822	7351	0	1879	8405	0	1992

EWB : Evaporator Wet Bulb temperature (°C)

EDB : Evaporator Dry Bulb temperature (°C)

(°CDB) : Outdoor Unit Inlet Air Dry Temperature (°C)

TC : Total Capacity (W)

SHC : Sensible Heating Capacity (W)

PI : Power Input

	INDOOR	OUTDOOR TEMPERATURE (°CDB)																							
	EDB	-15			-10			-7			-5			0			7			10			15		
	°C	TC	SHC	PI	TC	SHC	PI	TC	SHC	PI	TC	SHC	PI	TC	SHC	PI	TC	SHC	PI	TC	SHC	PI	TC	SHC	PI
1.8+1.8+3.5	16	2448	0	1248	3876	0	1282	4419	0	1337	4780	0	1373	5821	0	1537	6875	0	1557	7500	0	1599	8656	0	1679
	18	2414	0	1265	3842	0	1299	4376	0	1365	4733	0	1409	5760	0	1576	6841	0	1636	7473	0	1670	8622	0	1758
	20	2380	0	1282	3808	0	1316	4338	0	1387	4692	0	1434	5712	0	1603	6800	0	1687	7310	0	1746	8568	0	1839
	22	2346	0	1299	3774	0	1333	4284	0	1416	4624	0	1471	5651	0	1641	6759	0	1754	7392	0	1810	8527	0	1915
	24	2312	0	1316	3740	0	1350	4246	0	1444	4583	0	1506	5603	0	1680	6718	0	1822	7351	0	1879	8405	0	1992
1.8+1.8+5.0	16	2448	0	1248	3876	0	1282	4419	0	1337	4780	0	1373	5821	0	1537	6875	0	1557	7500	0	1599	8656	0	1679
	18	2414	0	1265	3842	0	1299	4376	0	1365	4733	0	1409	5760	0	1576	6841	0	1636	7473	0	1670	8622	0	1758
	20	2380	0	1282	3808	0	1316	4338	0	1387	4692	0	1434	5712	0	1603	6800	0	1687	7310	0	1746	8568	0	1839
	22	2346	0	1299	3774	0	1333	4284	0	1416	4624	0	1471	5651	0	1641	6759	0	1754	7392	0	1810	8527	0	1915
	24	2312	0	1316	3740	0	1350	4246	0	1444	4583	0	1506	5603	0	1680	6718	0	1822	7351	0	1879	8405	0	1992
1.8+2.5+2.5	16	2448	0	1248	3876	0	1282	4419	0	1337	4780	0	1373	5821	0	1537	6875	0	1557	7500	0	1599	8656	0	1679
	18	2414	0	1265	3842	0	1299	4376	0	1365	4733	0	1409	5760	0	1576	6841	0	1636	7473	0	1670	8622	0	1758
	20	2380	0	1282	3808	0	1316	4338	0	1387	4692	0	1434	5712	0	1603	6800	0	1687	7310	0	1746	8568	0	1839
	22	2346	0	1299	3774	0	1333	4284	0	1416	4624	0	1471	5651	0	1641	6759	0	1754	7392	0	1810	8527	0	1915
	24	2312	0	1316	3740	0	1350	4246	0	1444	4583	0	1506	5603	0	1680	6718	0	1822	7351	0	1879	8405	0	1992
1.8+2.5+3.5	16	2448	0	1248	3876	0	1282	4419	0	1337	4780	0	1373	5821	0	1537	6875	0	1557	7500	0	1599	8656	0	1679
	18	2414	0	1265	3842	0	1299	4376	0	1365	4733	0	1409	5760	0	1576	6841	0	1636	7473	0	1670	8622	0	1758
	20	2380	0	1282	3808	0	1316	4338	0	1387	4692	0	1434	5712	0	1603	6800	0	1687	7310	0	1746	8568	0	1839
	22	2346	0	1299	3774	0	1333	4284	0	1416	4624	0	1471	5651	0	1641	6759	0	1754	7392	0	1810	8527	0	1915
	24	2312	0	1316	3740	0	1350	4246	0	1444	4583	0	1506	5603	0	1680	6718	0	1822	7351	0	1879	8405	0	1992
1.8+3.5+3.5	16	2448	0	1248	3876	0	1282	4419	0	1337	4780	0	1373	5821	0	1537	6875	0	1557	7500	0	1599	8656	0	1679
	18	2414	0	1265	3842	0	1299	4376	0	1365	4733	0	1409	5760	0	1576	6841	0	1636	7473	0	1670	8622	0	1758
	20	2380	0	1282	3808	0	1316	4338	0	1387	4692	0	1434	5712	0	1603	6800	0	1687	7310	0	1746	8568	0	1839
	22	2346	0	1299	3774	0	1333	4284	0	1416	4624	0	1471	5651	0	1641	6759	0	1754	7392	0	1810	8527	0	1915
	24	2312	0	1316	3740	0	1350	4246	0	1444	4583	0	1506	5603	0	1680	6718	0	1822	7351	0	1879	8405	0	1992
2.5+2.5+2.5	16	2448	0	1248	3876	0	1282	4419	0	1337	4780	0	1373	5821	0	1537	6875	0	1557	7500	0	1599	8656	0	1679
	18	2414	0	1265	3842	0	1299	4376	0	1365	4733	0	1409	5760	0	1576	6841	0	1636	7473	0	1670	8622	0	1758
	20	2380	0	1282	3808	0	1316	4338	0	1387	4692	0	1434	5712	0	1603	6800	0	1687	7310	0	1746	8568	0	1839
	22	2346	0	1299	3774	0	1333	4284	0	1416	4624	0	1471	5651	0	1641	6759	0	1754	7392	0	1810	8527	0	1915
	24	2312	0	1316	3740	0	1350	4246	0	1444	4583	0	1506	5603	0	1680	6718	0	1822	7351	0	1879	8405	0	1992
2.5+2.5+3.5	16	2448	0	1248	3876	0	1282	4419	0	1337	4780	0	1373	5821	0	1537	6875	0	1557	7500	0	1599	8656	0	1679
	18	2414	0	1265	3842	0	1299	4376	0	1365	4733	0	1409	5760	0	1576	6841	0	1636	7473	0	1670	8622	0	1758
	20	2380	0	1282	3808	0	1316	4338	0	1387	4692	0	1434	5712	0	1603	6800	0	1687	7310	0	1746	8568	0	1839
	22	2346	0	1299	3774	0	1333	4284	0	1416	4624	0	1471	5651	0	1641	6759	0	1754	7392	0	1810	8527	0	1915
	24	2312	0	1316	3740	0	1350	4246	0	1444	4583	0	1506	5603	0	1680	6718	0	1822	7351	0	1879	8405	0	1992

EWB : Evaporator Wet Bulb temperature (°C)
EDB : Evaporator Dry Bulb temperature (°C)
(°CDB) : Outdoor Unit Inlet Air Dry Temperature (°C)

TC : Total Capacity (W)
SHC : Sensible Heating Capacity (W)
PI : Power Input

4.2.10. RAM-68NP3A

COOLING [50Hz, 230V]

	INDOOR		OUTDOOR TEMPERATURE (°CDB)																				
	EWB	EDB	-10			21			27			32			35			40			43		
	°C	°C	TC	SHC	PI	TC	SHC	PI	TC	SHC	PI	TC	SHC	PI	TC	SHC	PI	TC	SHC	PI	TC	SHC	PI
RAM-68NP3A	12.0	18	7015	4499	1593	5055	3818	1204	4679	3524	1419	5166	3913	1835	4977	3741	1915	4662	3526	2055	4473	3354	2135
	14.0	20	7015	4499	1593	5432	3818	1204	5055	3561	1435	5544	3913	1855	5355	3784	1935	4977	3526	2075	4788	3397	2175
	16.0	22	7015	4788	1618	5808	3818	1220	5378	3561	1452	5922	3913	1875	5733	3784	1975	5355	3526	2115	5166	3397	2195
	18.0	25	7522	5134	1643	6185	4148	1235	5701	3854	1469	6300	4257	1895	6048	4085	1975	5670	3827	2135	5418	3655	2214
	19.0	27	7775	5307	1668	6400	4368	1251	5916	4038	1485	6552	4472	1915	6300	4300	1995	5922	4042	2135	5670	3870	2214
	22.0	30	8620	5249	1668	7099	4331	1251	6561	4001	1485	7245	4429	1935	6993	4257	2015	6300	4128	2214	5859	4042	2334
	24.0	32	9212	5249	1692	7583	4331	1267	6991	4001	1502	7749	4429	1935	7434	4257	2035	6552	4214	2274	5985	4171	2414
1.8	12.0	18	2004	1375	447	1444	1167	338	1337	1077	398	1476	1196	515	1422	1143	538	1332	1077	577	1278	1025	599
	14.0	20	2004	1375	447	1552	1167	338	1444	1088	403	1584	1196	521	1530	1156	543	1422	1077	582	1368	1038	610
	16.0	22	2004	1463	454	1660	1167	342	1537	1088	408	1692	1196	526	1638	1156	554	1530	1077	594	1476	1038	616
	18.0	25	2149	1569	461	1767	1268	347	1629	1178	412	1800	1301	532	1728	1248	554	1620	1169	599	1548	1117	622
	19.0	27	2221	1622	468	1829	1335	351	1690	1234	417	1872	1367	538	1800	1314	560	1692	1235	599	1620	1183	622
	22.0	30	2463	1604	468	2028	1324	351	1875	1223	417	2070	1353	543	1998	1301	566	1800	1261	622	1674	1235	655
	24.0	32	2632	1604	475	2167	1324	356	1998	1223	422	2214	1353	543	2124	1301	571	1872	1288	638	1710	1275	678
2.5	12.0	18	2784	1910	623	2006	1620	471	1857	1496	555	2050	1661	718	1975	1588	749	1850	1497	803	1775	1424	835
	14.0	20	2784	1910	623	2155	1620	471	2006	1511	561	2200	1661	725	2125	1606	757	1975	1497	811	1900	1442	850
	16.0	22	2784	2032	633	2305	1620	477	2134	1511	568	2350	1661	733	2275	1606	772	2125	1497	827	2050	1442	858
	18.0	25	2985	2179	642	2454	1760	483	2262	1636	574	2500	1807	741	2400	1734	772	2250	1624	835	2150	1551	866
	19.0	27	3085	2252	652	2540	1854	489	2348	1714	581	2600	1898	749	2500	1825	780	2350	1716	835	2250	1643	866
	22.0	30	3421	2228	652	2817	1838	489	2604	1698	581	2875	1880	757	2775	1807	788	2500	1752	866	2325	1716	913
	24.0	32	3655	2228	662	3009	1838	495	2774	1698	587	3075	1880	757	2950	1807	796	2600	1789	889	2375	1770	944
3.5	12.0	18	3897	2673	926	2809	2268	700	2599	2094	825	2870	2325	1067	2765	2223	1114	2590	2095	1195	2485	1993	1241
	14.0	20	3897	2673	926	3018	2268	700	2809	2116	835	3080	2325	1079	2975	2248	1125	2765	2095	1206	2660	2018	1264
	16.0	22	3897	2845	941	3227	2268	709	2988	2116	844	3290	2325	1090	3185	2248	1148	2975	2095	1230	2870	2018	1276
	18.0	25	4179	3050	955	3436	2465	718	3167	2290	854	3500	2529	1102	3360	2427	1148	3150	2274	1241	3010	2172	1288
	19.0	27	4320	3153	970	3555	2596	728	3287	2399	864	3640	2657	1114	3500	2555	1160	3290	2402	1241	3150	2300	1288
	22.0	30	4789	3119	970	3944	2574	728	3645	2377	864	4025	2632	1125	3885	2529	1172	3500	2453	1288	3255	2402	1357
	24.0	32	5118	3119	984	4213	2574	737	3884	2377	873	4305	2632	1125	4130	2529	1183	3640	2504	1322	3325	2478	1404
5	12.0	18	5567	3819	1421	4012	3240	1074	3713	2991	1266	4100	3322	1638	3950	3176	1709	3700	2993	1833	3550	2847	1905
	14.0	20	5567	3819	1421	4311	3240	1074	4012	3022	1281	4400	3322	1655	4250	3212	1727	3950	2993	1851	3800	2884	1940
	16.0	22	5567	4064	1443	4610	3240	1088	4268	3022	1296	4700	3322	1673	4550	3212	1762	4250	2993	1887	4100	2884	1958
	18.0	25	5970	4358	1466	4909	3521	1102	4524	3272	1310	5000	3614	1691	4800	3468	1762	4500	3249	1905	4300	3103	1976
	19.0	27	6171	4505	1488	5079	3708	1116	4695	3427	1325	5200	3796	1709	5000	3650	1780	4700	3431	1905	4500	3285	1976
	22.0	30	6841	4456	1488	5634	3677	1116	5207	3396	1325	5750	3760	1727	5550	3614	1798	5000	3504	1976	4650	3431	2083
	24.0	32	7311	4456	1510	6018	3677	1131	5549	3396	1340	6150	3760	1727	5900	3614	1816	5200	3577	2029	4750	3541	2154
1.8+1.8	12.0	18	4008	2750	950	2889	2333	718	2674	2154	846	2952	2391	1095	2844	2286	1142	2664	2155	1226	2556	2050	1273
	14.0	20	4008	2750	950	3104	2333	718	2889	2176	856	3168	2391	1107	3060	2313	1154	2844	2155	1238	2736	2076	1297
	16.0	22	4008	2926	965	3319	2333	727	3073	2176	866	3384	2391	1119	3276	2313	1178	3060	2155	1261	2952	2076	1309
	18.0	25	4298	3138	980	3534	2535	737	3258	2356	876	3600	2602	1131	3456	2497	1178	3240	2339	1273	3096	2234	1321
	19.0	27	4443	3243	995	3657	2670	746	3380	2468	886	3744	2733	1142	3600	2628	1190	3384	2470	1273	3240	2365	1321
	22.0	30	4926	3208	995	4057	2647	746	3749	2445	886	4140	2707	1154	3996	2602	1202	3600	2523	1321	3348	2470	1392
	24.0	32	5264	3208	1010	4333	2647	756	3995	2445	896	4428	2707	1154	4248	2602	1214	3744	2575	1357	3420	2549	1440

	INDOOR		OUTDOOR TEMPERATURE (°CDB)																				
	EWB	EDB	-10			21			27			32			35			40			43		
	°C	°C	TC	SHC	PI	TC	SHC	PI	TC	SHC	PI	TC	SHC	PI	TC	SHC	PI	TC	SHC	PI	TC	SHC	PI
1.8+2.5	12.0	18	4676	3208	1046	3370	2722	790	3119	2513	932	3444	2790	1205	3318	2667	1258	3108	2514	1349	2982	2391	1402
	14.0	20	4676	3208	1046	3621	2722	790	3370	2539	942	3696	2790	1218	3570	2698	1271	3318	2514	1362	3192	2422	1428
	16.0	22	4676	3414	1062	3872	2722	801	3585	2539	953	3948	2790	1231	3822	2698	1297	3570	2514	1389	3444	2422	1441
	18.0	25	5014	3661	1079	4123	2958	811	3800	2748	964	4200	3035	1245	4032	2913	1297	3780	2729	1402	3612	2606	1454
	19.0	27	5183	3784	1095	4267	3115	822	3944	2879	975	4368	3189	1258	4200	3066	1310	3948	2882	1402	3780	2759	1454
	22.0	30	5747	3743	1095	4733	3088	822	4374	2853	975	4830	3158	1271	4662	3035	1323	4200	2943	1454	3906	2882	1533
	24.0	32	6141	3743	1111	5055	3088	832	4661	2853	986	5166	3158	1271	4956	3035	1336	4368	3005	1493	3990	2974	1585
1.8+3.5	12.0	18	5567	3819	1317	4012	3240	996	3713	2991	1173	4100	3322	1518	3950	3176	1584	3700	2993	1700	3550	2847	1766
	14.0	20	5567	3819	1317	4311	3240	996	4012	3022	1187	4400	3322	1535	4250	3212	1601	3950	2993	1716	3800	2884	1799
	16.0	22	5567	4064	1338	4610	3240	1009	4268	3022	1201	4700	3322	1551	4550	3212	1634	4250	2993	1749	4100	2884	1815
	18.0	25	5970	4358	1359	4909	3521	1022	4524	3272	1215	5000	3614	1568	4800	3468	1634	4500	3249	1766	4300	3103	1832
	19.0	27	6171	4505	1379	5079	3708	1035	4695	3427	1229	5200	3796	1584	5000	3650	1650	4700	3431	1766	4500	3285	1832
	22.0	30	6841	4456	1379	5634	3677	1035	5207	3396	1229	5750	3760	1601	5550	3614	1667	5000	3504	1832	4650	3431	1931
	24.0	32	7311	4456	1400	6018	3677	1048	5549	3396	1242	6150	3760	1601	5900	3614	1683	5200	3577	1881	4750	3541	1997
1.8+5.0	12.0	18	6012	4125	1433	4333	3500	1083	4010	3231	1276	4428	3587	1651	4266	3430	1723	3996	3232	1849	3834	3075	1921
	14.0	20	6012	4125	1433	4656	3500	1083	4333	3264	1291	4752	3587	1669	4590	3469	1741	4266	3232	1867	4104	3114	1957
	16.0	22	6012	4389	1456	4979	3500	1097	4610	3264	1306	5076	3587	1687	4914	3469	1777	4590	3232	1903	4428	3114	1975
	18.0	25	6447	4706	1478	5301	3803	1112	4886	3533	1321	5400	3903	1705	5184	3745	1777	4860	3508	1921	4644	3351	1992
	19.0	27	6664	4865	1500	5486	4004	1126	5071	3702	1336	5616	4100	1723	5400	3942	1795	5076	3705	1921	4860	3548	1992
	22.0	30	7389	4812	1500	6085	3971	1126	5624	3668	1336	6210	4060	1741	5994	3903	1813	5400	3784	1992	5022	3705	2100
	24.0	32	7896	4812	1523	6500	3971	1140	5993	3668	1352	6642	4060	1741	6372	3903	1831	5616	3863	2046	5130	3824	2172
2.5+2.5	12.0	18	5567	3819	1317	4012	3240	996	3713	2991	1173	4100	3322	1518	3950	3176	1584	3700	2993	1700	3550	2847	1766
	14.0	20	5567	3819	1317	4311	3240	996	4012	3022	1187	4400	3322	1535	4250	3212	1601	3950	2993	1716	3800	2884	1799
	16.0	22	5567	4064	1338	4610	3240	1009	4268	3022	1201	4700	3322	1551	4550	3212	1634	4250	2993	1749	4100	2884	1815
	18.0	25	5970	4358	1359	4909	3521	1022	4524	3272	1215	5000	3614	1568	4800	3468	1634	4500	3249	1766	4300	3103	1832
	19.0	27	6171	4505	1379	5079	3708	1035	4695	3427	1229	5200	3796	1584	5000	3650	1650	4700	3431	1766	4500	3285	1832
	22.0	30	6841	4456	1379	5634	3677	1035	5207	3396	1229	5750	3760	1601	5550	3614	1667	5000	3504	1832	4650	3431	1931
	24.0	32	7311	4456	1400	6018	3677	1048	5549	3396	1242	6150	3760	1601	5900	3614	1683	5200	3577	1881	4750	3541	1997
2.5+3.5	12.0	18	5790	3972	1381	4173	3370	1044	3862	3111	1230	4264	3454	1592	4108	3303	1661	3848	3113	1782	3692	2961	1851
	14.0	20	5790	3972	1381	4483	3370	1044	4173	3143	1245	4576	3454	1609	4420	3340	1678	4108	3113	1799	3952	2999	1886
	16.0	22	5790	4227	1403	4794	3370	1058	4439	3143	1259	4888	3454	1626	4732	3340	1713	4420	3113	1834	4264	2999	1903
	18.0	25	6208	4532	1424	5105	3662	1071	4705	3403	1274	5200	3758	1644	4992	3606	1713	4680	3378	1851	4472	3227	1920
	19.0	27	6418	4685	1446	5282	3856	1085	4883	3565	1288	5408	3948	1661	5200	3796	1730	4888	3568	1851	4680	3416	1920
	22.0	30	7115	4634	1446	5860	3824	1085	5416	3532	1288	5980	3910	1678	5772	3758	1747	5200	3644	1920	4836	3568	2024
	24.0	32	7603	4634	1468	6259	3824	1099	5771	3532	1303	6396	3910	1678	6136	3758	1765	5408	3720	1972	4940	3682	2093
3.5+3.5	12.0	18	6012	4125	1433	4333	3500	1083	4010	3231	1276	4428	3587	1651	4266	3430	1723	3996	3232	1849	3834	3075	1921
	14.0	20	6012	4125	1433	4656	3500	1083	4333	3264	1291	4752	3587	1669	4590	3469	1741	4266	3232	1867	4104	3114	1957
	16.0	22	6012	4389	1456	4979	3500	1097	4610	3264	1306	5076	3587	1687	4914	3469	1777	4590	3232	1903	4428	3114	1975
	18.0	25	6447	4706	1478	5301	3803	1112	4886	3533	1321	5400	3903	1705	5184	3745	1777	4860	3508	1921	4644	3351	1992
	19.0	27	6664	4865	1500	5486	4004	1126	5071	3702	1336	5616	4100	1723	5400	3942	1795	5076	3705	1921	4860	3548	1992
	22.0	30	7389	4812	1500	6085	3971	1126	5624	3668	1336	6210	4060	1741	5994	3903	1813	5400	3784	1992	5022	3705	2100
	24.0	32	7896	4812	1523	6500	3971	1140	5993	3668	1352	6642	4060	1741	6372	3903	1831	5616	3863	2046	5130	3824	2172

	INDOOR		OUTDOOR TEMPERATURE (°CDB)																				
	EWB	EDB	-10			21			27			32			35			40			43		
	°C	°C	TC	SHC	PI	TC	SHC	PI	TC	SHC	PI	TC	SHC	PI	TC	SHC	PI	TC	SHC	PI	TC	SHC	PI
2.5+5.0	12.0	18	6012	4125	1433	4333	3500	1083	4010	3231	1276	4428	3587	1651	4266	3430	1723	3996	3232	1849	3834	3075	1921
	14.0	20	6012	4125	1433	4656	3500	1083	4333	3264	1291	4752	3587	1669	4590	3469	1741	4266	3232	1867	4104	3114	1957
	16.0	22	6012	4389	1456	4979	3500	1097	4610	3264	1306	5076	3587	1687	4914	3469	1777	4590	3232	1903	4428	3114	1975
	18.0	25	6447	4706	1478	5301	3803	1112	4886	3533	1321	5400	3903	1705	5184	3745	1777	4860	3508	1921	4644	3351	1992
	19.0	27	6664	4865	1500	5486	4004	1126	5071	3702	1336	5616	4100	1723	5400	3942	1795	5076	3705	1921	4860	3548	1992
	22.0	30	7389	4812	1500	6085	3971	1126	5624	3668	1336	6210	4060	1741	5994	3903	1813	5400	3784	1992	5022	3705	2100
	24.0	32	7896	4812	1523	6500	3971	1140	5993	3668	1352	6642	4060	1741	6372	3903	1831	5616	3863	2046	5130	3824	2172
3.5+5.0	12.0	18	6012	4125	1593	4333	3500	1204	4010	3231	1419	4428	3587	1835	4266	3430	1915	3996	3232	2055	3834	3075	2135
	14.0	20	6012	4125	1593	4656	3500	1204	4333	3264	1435	4752	3587	1855	4590	3469	1935	4266	3232	2075	4104	3114	2175
	16.0	22	6012	4389	1618	4979	3500	1220	4610	3264	1452	5076	3587	1875	4914	3469	1975	4590	3232	2115	4428	3114	2195
	18.0	25	6447	4706	1643	5301	3803	1235	4886	3533	1469	5400	3903	1895	5184	3745	1975	4860	3508	2135	4644	3351	2214
	19.0	27	6664	4865	1668	5486	4004	1251	5071	3702	1485	5616	4100	1915	5400	3942	1995	5076	3705	2135	4860	3548	2214
	22.0	30	7389	4812	1668	6085	3971	1251	5624	3668	1485	6210	4060	1935	5994	3903	2015	5400	3784	2214	5022	3705	2334
	24.0	32	7896	4812	1692	6500	3971	1267	5993	3668	1502	6642	4060	1935	6372	3903	2035	5616	3863	2274	5130	3824	2414
1.8+1.8+1.8	12.0	18	6012	4125	1421	4333	3500	1074	4010	3231	1266	4428	3587	1638	4266	3430	1709	3996	3232	1833	3834	3075	1905
	14.0	20	6012	4125	1421	4656	3500	1074	4333	3264	1281	4752	3587	1655	4590	3469	1727	4266	3232	1851	4104	3114	1940
	16.0	22	6012	4389	1443	4979	3500	1088	4610	3264	1296	5076	3587	1673	4914	3469	1762	4590	3232	1887	4428	3114	1958
	18.0	25	6447	4706	1466	5301	3803	1102	4886	3533	1310	5400	3903	1691	5184	3745	1762	4860	3508	1905	4644	3351	1976
	19.0	27	6664	4865	1488	5486	4004	1116	5071	3702	1325	5616	4100	1709	5400	3942	1780	5076	3705	1905	4860	3548	1976
	22.0	30	7389	4812	1488	6085	3971	1116	5624	3668	1325	6210	4060	1727	5994	3903	1798	5400	3784	1976	5022	3705	2083
	24.0	32	7896	4812	1510	6500	3971	1131	5993	3668	1340	6642	4060	1727	6372	3903	1816	5616	3863	2029	5130	3824	2154
1.8+1.8+2.5	12.0	18	6792	4340	1613	4895	3683	1219	4530	3399	1436	5002	3775	1858	4819	3609	1939	4514	3401	2081	4331	3235	2161
	14.0	20	6792	4340	1613	5259	3683	1219	4895	3435	1453	5368	3775	1879	5185	3650	1959	4819	3401	2101	4636	3277	2202
	16.0	22	6792	4618	1638	5624	3683	1235	5207	3435	1470	5734	3775	1899	5551	3650	2000	5185	3401	2141	5002	3277	2222
	18.0	25	7283	4952	1663	5988	4001	1251	5520	3718	1487	6100	4107	1919	5856	3941	2000	5490	3692	2161	5246	3526	2242
	19.0	27	7528	5119	1688	6197	4214	1267	5728	3895	1504	6344	4314	1939	6100	4148	2020	5734	3899	2161	5490	3733	2242
	22.0	30	8347	5064	1688	6874	4178	1267	6353	3860	1504	7015	4272	1959	6771	4107	2040	6100	3982	2242	5673	3899	2363
	24.0	32	8919	5064	1714	7342	4178	1283	6770	3860	1521	7503	4272	1959	7198	4107	2060	6344	4065	2303	5795	4024	2444
1.8+1.8+3.5	12.0	18	7015	4483	1673	5055	3803	1264	4679	3511	1490	5166	3898	1927	4977	3727	2011	4662	3513	2158	4473	3342	2242
	14.0	20	7015	4483	1673	5432	3803	1264	5055	3547	1507	5544	3898	1948	5355	3770	2032	4977	3513	2179	4788	3384	2284
	16.0	22	7015	4770	1699	5808	3803	1281	5378	3547	1525	5922	3898	1969	5733	3770	2074	5355	3513	2221	5166	3384	2305
	18.0	25	7522	5115	1725	6185	4132	1297	5701	3840	1542	6300	4241	1990	6048	4070	2074	5670	3813	2242	5418	3641	2325
	19.0	27	7775	5287	1751	6400	4352	1314	5916	4023	1560	6552	4455	2011	6300	4284	2095	5922	4027	2242	5670	3856	2325
	22.0	30	8620	5230	1751	7099	4315	1314	6561	3986	1560	7245	4413	2032	6993	4241	2116	6300	4113	2325	5859	4027	2451
	24.0	32	9212	5230	1777	7583	4315	1331	6991	3986	1577	7749	4413	2032	7434	4241	2137	6552	4198	2388	5985	4155	2535
1.8+1.8+5.0	12.0	18	7015	4483	1673	5055	3803	1264	4679	3511	1490	5166	3898	1927	4977	3727	2011	4662	3513	2158	4473	3342	2242
	14.0	20	7015	4483	1673	5432	3803	1264	5055	3547	1507	5544	3898	1948	5355	3770	2032	4977	3513	2179	4788	3384	2284
	16.0	22	7015	4770	1699	5808	3803	1281	5378	3547	1525	5922	3898	1969	5733	3770	2074	5355	3513	2221	5166	3384	2305
	18.0	25	7522	5115	1725	6185	4132	1297	5701	3840	1542	6300	4241	1990	6048	4070	2074	5670	3813	2242	5418	3641	2325
	19.0	27	7775	5287	1751	6400	4352	1314	5916	4023	1560	6552	4455	2011	6300	4284	2095	5922	4027	2242	5670	3856	2325
	22.0	30	8620	5230	1751	7099	4315	1314	6561	3986	1560	7245	4413	2032	6993	4241	2116	6300	4113	2325	5859	4027	2451
	24.0	32	9212	5230	1777	7583	4315	1331	6991	3986	1577	7749	4413	2032	7434	4241	2137	6552	4198	2388	5985	4155	2535

	INDOOR		OUTDOOR TEMPERATURE (°CDB)																				
	EWB	EDB	-10			21			27			32			35			40			43		
	°C	°C	TC	SHC	PI	TC	SHC	PI	TC	SHC	PI	TC	SHC	PI	TC	SHC	PI	TC	SHC	PI	TC	SHC	PI
1.8+2.5+2.5	12.0	18	7015	4483	1673	5055	3803	1264	4679	3511	1490	5166	3898	1927	4977	3727	2011	4662	3513	2158	4473	3342	2242
	14.0	20	7015	4483	1673	5432	3803	1264	5055	3547	1507	5544	3898	1948	5355	3770	2032	4977	3513	2179	4788	3384	2284
	16.0	22	7015	4770	1699	5808	3803	1281	5378	3547	1525	5922	3898	1969	5733	3770	2074	5355	3513	2221	5166	3384	2305
	18.0	25	7522	5115	1725	6185	4132	1297	5701	3840	1542	6300	4241	1990	6048	4070	2074	5670	3813	2242	5418	3641	2325
	19.0	27	7775	5287	1751	6400	4352	1314	5916	4023	1560	6552	4455	2011	6300	4284	2095	5922	4027	2242	5670	3856	2325
	22.0	30	8620	5230	1751	7099	4315	1314	6561	3986	1560	7245	4413	2032	6993	4241	2116	6300	4113	2325	5859	4027	2451
	24.0	32	9212	5230	1777	7583	4315	1331	6991	3986	1577	7749	4413	2032	7434	4241	2137	6552	4198	2388	5985	4155	2535
1.8+2.5+3.5	12.0	18	7015	4483	1673	5055	3803	1264	4679	3511	1490	5166	3898	1927	4977	3727	2011	4662	3513	2158	4473	3342	2242
	14.0	20	7015	4483	1673	5432	3803	1264	5055	3547	1507	5544	3898	1948	5355	3770	2032	4977	3513	2179	4788	3384	2284
	16.0	22	7015	4770	1699	5808	3803	1281	5378	3547	1525	5922	3898	1969	5733	3770	2074	5355	3513	2221	5166	3384	2305
	18.0	25	7522	5115	1725	6185	4132	1297	5701	3840	1542	6300	4241	1990	6048	4070	2074	5670	3813	2242	5418	3641	2325
	19.0	27	7775	5287	1751	6400	4352	1314	5916	4023	1560	6552	4455	2011	6300	4284	2095	5922	4027	2242	5670	3856	2325
	22.0	30	8620	5230	1751	7099	4315	1314	6561	3986	1560	7245	4413	2032	6993	4241	2116	6300	4113	2325	5859	4027	2451
	24.0	32	9212	5230	1777	7583	4315	1331	6991	3986	1577	7749	4413	2032	7434	4241	2137	6552	4198	2388	5985	4155	2535
1.8+3.5+3.5	12.0	18	7015	4483	1673	5055	3803	1264	4679	3511	1490	5166	3898	1927	4977	3727	2011	4662	3513	2158	4473	3342	2242
	14.0	20	7015	4483	1673	5432	3803	1264	5055	3547	1507	5544	3898	1948	5355	3770	2032	4977	3513	2179	4788	3384	2284
	16.0	22	7015	4770	1699	5808	3803	1281	5378	3547	1525	5922	3898	1969	5733	3770	2074	5355	3513	2221	5166	3384	2305
	18.0	25	7522	5115	1725	6185	4132	1297	5701	3840	1542	6300	4241	1990	6048	4070	2074	5670	3813	2242	5418	3641	2325
	19.0	27	7775	5287	1751	6400	4352	1314	5916	4023	1560	6552	4455	2011	6300	4284	2095	5922	4027	2242	5670	3856	2325
	22.0	30	8620	5230	1751	7099	4315	1314	6561	3986	1560	7245	4413	2032	6993	4241	2116	6300	4113	2325	5859	4027	2451
	24.0	32	9212	5230	1777	7583	4315	1331	6991	3986	1577	7749	4413	2032	7434	4241	2137	6552	4198	2388	5985	4155	2535
2.5+2.5+2.5	12.0	18	7015	4483	1673	5055	3803	1264	4679	3511	1490	5166	3898	1927	4977	3727	2011	4662	3513	2158	4473	3342	2242
	14.0	20	7015	4483	1673	5432	3803	1264	5055	3547	1507	5544	3898	1948	5355	3770	2032	4977	3513	2179	4788	3384	2284
	16.0	22	7015	4770	1699	5808	3803	1281	5378	3547	1525	5922	3898	1969	5733	3770	2074	5355	3513	2221	5166	3384	2305
	18.0	25	7522	5115	1725	6185	4132	1297	5701	3840	1542	6300	4241	1990	6048	4070	2074	5670	3813	2242	5418	3641	2325
	19.0	27	7775	5287	1751	6400	4352	1314	5916	4023	1560	6552	4455	2011	6300	4284	2095	5922	4027	2242	5670	3856	2325
	22.0	30	8620	5230	1751	7099	4315	1314	6561	3986	1560	7245	4413	2032	6993	4241	2116	6300	4113	2325	5859	4027	2451
	24.0	32	9212	5230	1777	7583	4315	1331	6991	3986	1577	7749	4413	2032	7434	4241	2137	6552	4198	2388	5985	4155	2535
2.5+2.5+3.5	12.0	18	7015	4483	1673	5055	3803	1264	4679	3511	1490	5166	3898	1927	4977	3727	2011	4662	3513	2158	4473	3342	2242
	14.0	20	7015	4483	1673	5432	3803	1264	5055	3547	1507	5544	3898	1948	5355	3770	2032	4977	3513	2179	4788	3384	2284
	16.0	22	7015	4770	1699	5808	3803	1281	5378	3547	1525	5922	3898	1969	5733	3770	2074	5355	3513	2221	5166	3384	2305
	18.0	25	7522	5115	1725	6185	4132	1297	5701	3840	1542	6300	4241	1990	6048	4070	2074	5670	3813	2242	5418	3641	2325
	19.0	27	7775	5287	1751	6400	4352	1314	5916	4023	1560	6552	4455	2011	6300	4284	2095	5922	4027	2242	5670	3856	2325
	22.0	30	8620	5230	1751	7099	4315	1314	6561	3986	1560	7245	4413	2032	6993	4241	2116	6300	4113	2325	5859	4027	2451
	24.0	32	9212	5230	1777	7583	4315	1331	6991	3986	1577	7749	4413	2032	7434	4241	2137	6552	4198	2388	5985	4155	2535

EWB : Evaporator Wet Bulb temperature (°C)
EDB : Evaporator Dry Bulb temperature (°C)
(°CDB) : Outdoor Unit Inlet Air Dry Temperature (°C)

TC : Total Capacity (W)
SHC : Sensible Heating Capacity (W)
PI : Power Input

HEATING [50Hz, 230V]

	INDOOR	OUTDOOR TEMPERATURE (°CDB)																							
	EDB	-15			-10			-7			-5			0			7			10			15		
	°C	TC	SHC	PI	TC	SHC	PI	TC	SHC	PI	TC	SHC	PI	TC	SHC	PI	TC	SHC	PI	TC	SHC	PI	TC	SHC	PI
RAM-68NP3A	16	2592	0	1554	4104	0	1596	4679	0	1664	5062	0	1709	6163	0	1913	7279	0	1938	7942	0	1991	9166	0	2090
	18	2556	0	1575	4068	0	1617	4634	0	1699	5011	0	1754	6098	0	1961	7243	0	2037	7913	0	2079	9130	0	2188
	20	2520	0	1596	4032	0	1638	4594	0	1726	4968	0	1785	6048	0	1995	7200	0	2100	7740	0	2174	9072	0	2289
	22	2484	0	1617	3996	0	1659	4536	0	1762	4896	0	1831	5983	0	2043	7157	0	2184	7826	0	2253	9029	0	2384
	24	2448	0	1638	3960	0	1680	4496	0	1797	4853	0	1875	5933	0	2092	7114	0	2268	7783	0	2339	8899	0	2480
1.8	16	900	0	555	1425	0	570	1625	0	594	1758	0	611	2140	0	683	2528	0	692	2758	0	711	3183	0	746
	18	888	0	563	1413	0	578	1609	0	607	1740	0	626	2118	0	701	2515	0	728	2748	0	743	3170	0	782
	20	875	0	570	1400	0	585	1595	0	617	1725	0	638	2100	0	713	2500	0	750	2688	0	776	3150	0	818
	22	863	0	578	1388	0	593	1575	0	629	1700	0	654	2078	0	730	2485	0	780	2718	0	805	3135	0	851
	24	850	0	585	1375	0	600	1561	0	642	1685	0	670	2060	0	747	2470	0	810	2703	0	836	3090	0	886
2.5	16	1404	0	847	2223	0	870	2534	0	907	2742	0	932	3338	0	1043	3943	0	1057	4302	0	1085	4965	0	1139
	18	1385	0	859	2204	0	882	2510	0	926	2714	0	956	3303	0	1069	3923	0	1111	4286	0	1134	4945	0	1193
	20	1365	0	870	2184	0	893	2488	0	941	2691	0	973	3276	0	1088	3900	0	1145	4193	0	1185	4914	0	1248
	22	1346	0	882	2165	0	905	2457	0	961	2652	0	998	3241	0	1114	3877	0	1191	4239	0	1229	4891	0	1300
	24	1326	0	893	2145	0	916	2435	0	980	2629	0	1022	3214	0	1140	3853	0	1237	4216	0	1276	4820	0	1352
3.5	16	1728	0	1147	2736	0	1178	3119	0	1228	3374	0	1262	4109	0	1412	4853	0	1431	5294	0	1469	6110	0	1542
	18	1704	0	1163	2712	0	1194	3089	0	1254	3341	0	1294	4066	0	1448	4829	0	1504	5275	0	1535	6086	0	1615
	20	1680	0	1178	2688	0	1209	3062	0	1274	3312	0	1318	4032	0	1473	4800	0	1550	5160	0	1604	6048	0	1690
	22	1656	0	1194	2664	0	1225	3024	0	1301	3264	0	1352	3989	0	1508	4771	0	1612	5218	0	1663	6019	0	1759
	24	1632	0	1209	2640	0	1240	2997	0	1326	3235	0	1384	3955	0	1544	4742	0	1674	5189	0	1727	5933	0	1831
5	16	2340	0	1776	3705	0	1824	4224	0	1902	4570	0	1954	5564	0	2186	6572	0	2215	7170	0	2275	8275	0	2388
	18	2308	0	1800	3673	0	1848	4183	0	1942	4524	0	2004	5506	0	2242	6539	0	2328	7144	0	2376	8242	0	2501
	20	2275	0	1824	3640	0	1872	4147	0	1973	4485	0	2040	5460	0	2280	6500	0	2400	6988	0	2484	8190	0	2616
	22	2243	0	1848	3608	0	1896	4095	0	2014	4420	0	2093	5402	0	2335	6461	0	2496	7066	0	2575	8151	0	2724
	24	2210	0	1872	3575	0	1920	4059	0	2054	4381	0	2143	5356	0	2390	6422	0	2592	7027	0	2674	8034	0	2834
1.8+1.8	16	1800	0	1080	2850	0	1110	3249	0	1157	3515	0	1188	4280	0	1330	5055	0	1348	5515	0	1384	6365	0	1453
	18	1775	0	1095	2825	0	1124	3218	0	1181	3480	0	1219	4235	0	1364	5030	0	1416	5495	0	1445	6340	0	1521
	20	1750	0	1110	2800	0	1139	3190	0	1200	3450	0	1241	4200	0	1387	5000	0	1460	5375	0	1511	6300	0	1591
	22	1725	0	1124	2775	0	1153	3150	0	1225	3400	0	1273	4155	0	1421	4970	0	1518	5435	0	1567	6270	0	1657
	24	1700	0	1139	2750	0	1168	3122	0	1249	3370	0	1304	4120	0	1454	4940	0	1577	5405	0	1626	6180	0	1724
1.8+2.5	16	2232	0	1347	3534	0	1383	4029	0	1442	4359	0	1481	5307	0	1658	6268	0	1680	6839	0	1725	7893	0	1811
	18	2201	0	1365	3503	0	1401	3990	0	1472	4315	0	1520	5251	0	1700	6237	0	1765	6814	0	1802	7862	0	1896
	20	2170	0	1383	3472	0	1420	3956	0	1496	4278	0	1547	5208	0	1729	6200	0	1820	6665	0	1884	7812	0	1984
	22	2139	0	1401	3441	0	1438	3906	0	1527	4216	0	1587	5152	0	1771	6163	0	1893	6739	0	1953	7775	0	2066
	24	2108	0	1420	3410	0	1456	3871	0	1558	4179	0	1625	5109	0	1813	6126	0	1966	6702	0	2027	7663	0	2149
1.8+3.5	16	2448	0	1476	3876	0	1516	4419	0	1581	4780	0	1624	5821	0	1817	6875	0	1841	7500	0	1891	8656	0	1985
	18	2414	0	1496	3842	0	1536	4376	0	1614	4733	0	1666	5760	0	1863	6841	0	1935	7473	0	1975	8622	0	2079
	20	2380	0	1516	3808	0	1556	4338	0	1640	4692	0	1696	5712	0	1895	6800	0	1995	7310	0	2065	8568	0	2175
	22	2346	0	1536	3774	0	1576	4284	0	1674	4624	0	1740	5651	0	1941	6759	0	2075	7392	0	2141	8527	0	2264
	24	2312	0	1556	3740	0	1596	4246	0	1707	4583	0	1782	5603	0	1987	6718	0	2155	7351	0	2222	8405	0	2356

EWB : Evaporator Wet Bulb temperature (°C)

EDB : Evaporator Dry Bulb temperature (°C)

(°CDB) : Outdoor Unit Inlet Air Dry Temperature (°C)

TC : Total Capacity (W)

SHC : Sensible Heating Capacity (W)

PI : Power Input

	INDOOR	OUTDOOR TEMPERATURE (°CDB)																							
	EDB	-15			-10			-7			-5			0			7			10			15		
	°C	TC	SHC	PI	TC	SHC	PI	TC	SHC	PI	TC	SHC	PI	TC	SHC	PI	TC	SHC	PI	TC	SHC	PI	TC	SHC	PI
1.8+5.0	16	2520	0	1517	3990	0	1558	4549	0	1624	4921	0	1669	5992	0	1868	7077	0	1892	7721	0	1943	8911	0	2040
	18	2485	0	1538	3955	0	1579	4505	0	1658	4872	0	1712	5929	0	1915	7042	0	1989	7693	0	2030	8876	0	2136
	20	2450	0	1558	3920	0	1599	4466	0	1685	4830	0	1743	5880	0	1948	7000	0	2050	7525	0	2122	8820	0	2235
	22	2415	0	1579	3885	0	1620	4410	0	1720	4760	0	1788	5817	0	1995	6958	0	2132	7609	0	2200	8778	0	2327
	24	2380	0	1599	3850	0	1640	4371	0	1754	4718	0	1831	5768	0	2042	6916	0	2214	7567	0	2284	8652	0	2421
2.5+2.5	16	2448	0	1491	3876	0	1531	4419	0	1597	4780	0	1640	5821	0	1836	6875	0	1860	7500	0	1910	8656	0	2005
	18	2414	0	1511	3842	0	1552	4376	0	1630	4733	0	1683	5760	0	1882	6841	0	1955	7473	0	1995	8622	0	2100
	20	2380	0	1531	3808	0	1572	4338	0	1656	4692	0	1713	5712	0	1914	6800	0	2015	7310	0	2086	8568	0	2196
	22	2346	0	1552	3774	0	1592	4284	0	1691	4624	0	1757	5651	0	1961	6759	0	2096	7392	0	2162	8527	0	2287
	24	2312	0	1572	3740	0	1612	4246	0	1724	4583	0	1799	5603	0	2007	6718	0	2176	7351	0	2245	8405	0	2380
2.5+3.5	16	2520	0	1532	3990	0	1573	4549	0	1640	4921	0	1685	5992	0	1886	7077	0	1911	7721	0	1962	8911	0	2060
	18	2485	0	1553	3955	0	1594	4505	0	1675	4872	0	1728	5929	0	1933	7042	0	2008	7693	0	2049	8876	0	2157
	20	2450	0	1573	3920	0	1615	4466	0	1702	4830	0	1760	5880	0	1967	7000	0	2070	7525	0	2142	8820	0	2256
	22	2415	0	1594	3885	0	1635	4410	0	1737	4760	0	1805	5817	0	2014	6958	0	2153	7609	0	2221	8778	0	2349
	24	2380	0	1615	3850	0	1656	4371	0	1772	4718	0	1849	5768	0	2062	6916	0	2236	7567	0	2306	8652	0	2445
3.5+3.5	16	2592	0	1561	4104	0	1604	4679	0	1672	5062	0	1718	6163	0	1922	7279	0	1948	7942	0	2000	9166	0	2099
	18	2556	0	1583	4068	0	1625	4634	0	1707	5011	0	1762	6098	0	1971	7243	0	2047	7913	0	2089	9130	0	2199
	20	2520	0	1604	4032	0	1646	4594	0	1734	4968	0	1794	6048	0	2005	7200	0	2110	7740	0	2184	9072	0	2300
	22	2484	0	1625	3996	0	1667	4536	0	1771	4896	0	1840	5983	0	2053	7157	0	2194	7826	0	2264	9029	0	2395
	24	2448	0	1646	3960	0	1688	4496	0	1806	4853	0	1884	5933	0	2102	7114	0	2279	7783	0	2351	8899	0	2492
2.5+5.0	16	2592	0	1561	4104	0	1604	4679	0	1672	5062	0	1718	6163	0	1922	7279	0	1948	7942	0	2000	9166	0	2099
	18	2556	0	1583	4068	0	1625	4634	0	1707	5011	0	1762	6098	0	1971	7243	0	2047	7913	0	2089	9130	0	2199
	20	2520	0	1604	4032	0	1646	4594	0	1734	4968	0	1794	6048	0	2005	7200	0	2110	7740	0	2184	9072	0	2300
	22	2484	0	1625	3996	0	1667	4536	0	1771	4896	0	1840	5983	0	2053	7157	0	2194	7826	0	2264	9029	0	2395
	24	2448	0	1646	3960	0	1688	4496	0	1806	4853	0	1884	5933	0	2102	7114	0	2279	7783	0	2351	8899	0	2492
3.5+5.0	16	2592	0	1561	4104	0	1604	4679	0	1672	5062	0	1718	6163	0	1922	7279	0	1948	7942	0	2000	9166	0	2099
	18	2556	0	1583	4068	0	1625	4634	0	1707	5011	0	1762	6098	0	1971	7243	0	2047	7913	0	2089	9130	0	2199
	20	2520	0	1604	4032	0	1646	4594	0	1734	4968	0	1794	6048	0	2005	7200	0	2110	7740	0	2184	9072	0	2300
	22	2484	0	1625	3996	0	1667	4536	0	1771	4896	0	1840	5983	0	2053	7157	0	2194	7826	0	2264	9029	0	2395
	24	2448	0	1646	3960	0	1688	4496	0	1806	4853	0	1884	5933	0	2102	7114	0	2279	7783	0	2351	8899	0	2492
1.8+1.8+1.8	16	2520	0	1369	3990	0	1406	4549	0	1466	4921	0	1506	5992	0	1685	7077	0	1708	7721	0	1754	8911	0	1841
	18	2485	0	1388	3955	0	1425	4505	0	1497	4872	0	1545	5929	0	1728	7042	0	1795	7693	0	1832	8876	0	1928
	20	2450	0	1406	3920	0	1443	4466	0	1521	4830	0	1573	5880	0	1758	7000	0	1850	7525	0	1915	8820	0	2017
	22	2415	0	1425	3885	0	1462	4410	0	1553	4760	0	1613	5817	0	1800	6958	0	1924	7609	0	1985	8778	0	2100
	24	2380	0	1443	3850	0	1480	4371	0	1583	4718	0	1652	5768	0	1843	6916	0	1998	7567	0	2061	8652	0	2185
1.8+1.8+2.5	16	2592	0	1406	4104	0	1444	4679	0	1506	5062	0	1547	6163	0	1731	7279	0	1754	7942	0	1801	9166	0	1891
	18	2556	0	1425	4068	0	1463	4634	0	1537	5011	0	1587	6098	0	1775	7243	0	1843	7913	0	1881	9130	0	1980
	20	2520	0	1444	4032	0	1482	4594	0	1562	4968	0	1615	6048	0	1805	7200	0	1900	7740	0	1967	9072	0	2071
	22	2484	0	1463	3996	0	1501	4536	0	1594	4896	0	1657	5983	0	1849	7157	0	1976	7826	0	2039	9029	0	2157
	24	2448	0	1482	3960	0	1520	4496	0	1626	4853	0	1697	5933	0	1892	7114	0	2052	7783	0	2117	8899	0	2244

EWB : Evaporator Wet Bulb temperature (°C)

EDB : Evaporator Dry Bulb temperature (°C)

(°CDB) : Outdoor Unit Inlet Air Dry Temperature (°C)

TC : Total Capacity (W)

SHC : Sensible Heating Capacity (W)

PI : Power Input

	INDOOR	OUTDOOR TEMPERATURE (°CDB)																							
	EDB	-15			-10			-7			-5			0			7			10			15		
	°C	TC	SHC	PI	TC	SHC	PI	TC	SHC	PI	TC	SHC	PI	TC	SHC	PI	TC	SHC	PI	TC	SHC	PI	TC	SHC	PI
1.8+1.8+3.5	16	2592	0	1406	4104	0	1444	4679	0	1506	5062	0	1547	6163	0	1731	7279	0	1754	7942	0	1801	9166	0	1891
	18	2556	0	1425	4068	0	1463	4634	0	1537	5011	0	1587	6098	0	1775	7243	0	1843	7913	0	1881	9130	0	1980
	20	2520	0	1444	4032	0	1482	4594	0	1562	4968	0	1615	6048	0	1805	7200	0	1900	7740	0	1967	9072	0	2071
	22	2484	0	1463	3996	0	1501	4536	0	1594	4896	0	1657	5983	0	1849	7157	0	1976	7826	0	2039	9029	0	2157
	24	2448	0	1482	3960	0	1520	4496	0	1626	4853	0	1697	5933	0	1892	7114	0	2052	7783	0	2117	8899	0	2244
1.8+1.8+5.0	16	2592	0	1406	4104	0	1444	4679	0	1506	5062	0	1547	6163	0	1731	7279	0	1754	7942	0	1801	9166	0	1891
	18	2556	0	1425	4068	0	1463	4634	0	1537	5011	0	1587	6098	0	1775	7243	0	1843	7913	0	1881	9130	0	1980
	20	2520	0	1444	4032	0	1482	4594	0	1562	4968	0	1615	6048	0	1805	7200	0	1900	7740	0	1967	9072	0	2071
	22	2484	0	1463	3996	0	1501	4536	0	1594	4896	0	1657	5983	0	1849	7157	0	1976	7826	0	2039	9029	0	2157
	24	2448	0	1482	3960	0	1520	4496	0	1626	4853	0	1697	5933	0	1892	7114	0	2052	7783	0	2117	8899	0	2244
1.8+2.5+2.5	16	2592	0	1406	4104	0	1444	4679	0	1506	5062	0	1547	6163	0	1731	7279	0	1754	7942	0	1801	9166	0	1891
	18	2556	0	1425	4068	0	1463	4634	0	1537	5011	0	1587	6098	0	1775	7243	0	1843	7913	0	1881	9130	0	1980
	20	2520	0	1444	4032	0	1482	4594	0	1562	4968	0	1615	6048	0	1805	7200	0	1900	7740	0	1967	9072	0	2071
	22	2484	0	1463	3996	0	1501	4536	0	1594	4896	0	1657	5983	0	1849	7157	0	1976	7826	0	2039	9029	0	2157
	24	2448	0	1482	3960	0	1520	4496	0	1626	4853	0	1697	5933	0	1892	7114	0	2052	7783	0	2117	8899	0	2244
1.8+2.5+3.5	16	2592	0	1406	4104	0	1444	4679	0	1506	5062	0	1547	6163	0	1731	7279	0	1754	7942	0	1801	9166	0	1891
	18	2556	0	1425	4068	0	1463	4634	0	1537	5011	0	1587	6098	0	1775	7243	0	1843	7913	0	1881	9130	0	1980
	20	2520	0	1444	4032	0	1482	4594	0	1562	4968	0	1615	6048	0	1805	7200	0	1900	7740	0	1967	9072	0	2071
	22	2484	0	1463	3996	0	1501	4536	0	1594	4896	0	1657	5983	0	1849	7157	0	1976	7826	0	2039	9029	0	2157
	24	2448	0	1482	3960	0	1520	4496	0	1626	4853	0	1697	5933	0	1892	7114	0	2052	7783	0	2117	8899	0	2244
1.8+3.5+3.5	16	2592	0	1406	4104	0	1444	4679	0	1506	5062	0	1547	6163	0	1731	7279	0	1754	7942	0	1801	9166	0	1891
	18	2556	0	1425	4068	0	1463	4634	0	1537	5011	0	1587	6098	0	1775	7243	0	1843	7913	0	1881	9130	0	1980
	20	2520	0	1444	4032	0	1482	4594	0	1562	4968	0	1615	6048	0	1805	7200	0	1900	7740	0	1967	9072	0	2071
	22	2484	0	1463	3996	0	1501	4536	0	1594	4896	0	1657	5983	0	1849	7157	0	1976	7826	0	2039	9029	0	2157
	24	2448	0	1482	3960	0	1520	4496	0	1626	4853	0	1697	5933	0	1892	7114	0	2052	7783	0	2117	8899	0	2244
2.5+2.5+2.5	16	2592	0	1406	4104	0	1444	4679	0	1506	5062	0	1547	6163	0	1731	7279	0	1754	7942	0	1801	9166	0	1891
	18	2556	0	1425	4068	0	1463	4634	0	1537	5011	0	1587	6098	0	1775	7243	0	1843	7913	0	1881	9130	0	1980
	20	2520	0	1444	4032	0	1482	4594	0	1562	4968	0	1615	6048	0	1805	7200	0	1900	7740	0	1967	9072	0	2071
	22	2484	0	1463	3996	0	1501	4536	0	1594	4896	0	1657	5983	0	1849	7157	0	1976	7826	0	2039	9029	0	2157
	24	2448	0	1482	3960	0	1520	4496	0	1626	4853	0	1697	5933	0	1892	7114	0	2052	7783	0	2117	8899	0	2244
2.5+2.5+3.5	16	2592	0	1406	4104	0	1444	4679	0	1506	5062	0	1547	6163	0	1731	7279	0	1754	7942	0	1801	9166	0	1891
	18	2556	0	1425	4068	0	1463	4634	0	1537	5011	0	1587	6098	0	1775	7243	0	1843	7913	0	1881	9130	0	1980
	20	2520	0	1444	4032	0	1482	4594	0	1562	4968	0	1615	6048	0	1805	7200	0	1900	7740	0	1967	9072	0	2071
	22	2484	0	1463	3996	0	1501	4536	0	1594	4896	0	1657	5983	0	1849	7157	0	1976	7826	0	2039	9029	0	2157
	24	2448	0	1482	3960	0	1520	4496	0	1626	4853	0	1697	5933	0	1892	7114	0	2052	7783	0	2117	8899	0	2244

EWB : Evaporator Wet Bulb temperature (°C)
EDB : Evaporator Dry Bulb temperature (°C)
(°CDB) : Outdoor Unit Inlet Air Dry Temperature (°C)

TC : Total Cooling Capacity (W)
SHC : Sensible Heating Capacity (W)
PI : Power Input

4.2.11. RAM-70NP4A

COOLING [50Hz, 230V]

	INDOOR		OUTDOOR TEMPERATURE (°CDW)																				
	EWB	EDB	-10			21			27			32			35			40			43		
	°C	°C	TC	SHC	PI	TC	SHC	PI	TC	SHC	PI	TC	SHC	PI	TC	SHC	PI	TC	SHC	PI	TC	SHC	PI
RAM-70NP4A	12	18	6089	4267	1316	5895	4863	1336	5456	4489	1575	5822	4818	1969	5609	4606	2054	5254	4341	2204	5041	4129	2290
	14	20	6089	4267	1316	6334	4863	1336	5895	4536	1593	6248	4818	1990	6035	4659	2076	5609	4341	2226	5396	4182	2333
	16	22	6089	4540	1337	6773	4863	1354	6272	4536	1612	6674	4818	2012	6461	4659	2119	6035	4341	2268	5822	4182	2354
	18	25	6530	4869	1357	7212	5284	1371	6648	4910	1630	7100	5241	2033	6816	5029	2119	6390	4712	2290	6106	4500	2375
	19	27	6750	5033	1378	7463	5565	1389	6899	5144	1649	7384	5506	2054	7100	5294	2140	6674	4976	2290	6390	4765	2375
	22	30	7483	4978	1378	8279	5518	1389	7651	5097	1649	8165	5453	2076	7881	5241	2161	7100	5082	2375	6603	4976	2504
	24	32	7997	4978	1398	8843	5518	1406	8153	5097	1667	8733	5453	2076	8378	5241	2183	7384	5188	2440	6745	5135	2589
1.2	12	18	1029	721	228	996	822	231	922	759	272	984	814	340	948	778	355	888	734	381	852	698	396
	14	20	1029	721	228	1071	822	231	996	767	275	1056	814	344	1020	787	359	948	734	385	912	707	403
	16	22	1029	767	231	1145	822	234	1060	767	279	1128	814	348	1092	787	366	1020	734	392	984	707	407
	18	25	1104	823	235	1219	893	237	1124	830	282	1200	886	352	1152	850	366	1080	796	396	1032	761	411
	19	27	1141	851	238	1261	941	240	1166	869	285	1248	931	355	1200	895	370	1128	841	396	1080	805	411
	22	30	1265	841	238	1399	933	240	1293	862	285	1380	922	359	1332	886	374	1200	859	411	1116	841	433
	24	32	1352	841	242	1495	933	243	1378	862	288	1476	922	359	1416	886	377	1248	877	422	1140	868	448
1.8	12	18	1544	1082	277	1495	1233	281	1383	1138	331	1476	1221	414	1422	1168	432	1332	1101	464	1278	1047	482
	14	20	1544	1082	277	1606	1233	281	1495	1150	335	1584	1221	419	1530	1181	437	1422	1101	468	1368	1060	491
	16	22	1544	1151	281	1717	1233	285	1590	1150	339	1692	1221	423	1638	1181	446	1530	1101	477	1476	1060	495
	18	25	1655	1234	285	1829	1340	288	1685	1245	343	1800	1329	428	1728	1275	446	1620	1195	482	1548	1141	500
	19	27	1711	1276	290	1892	1411	292	1749	1304	347	1872	1396	432	1800	1342	450	1692	1262	482	1620	1208	500
	22	30	1897	1262	290	2099	1399	292	1940	1292	347	2070	1382	437	1998	1329	455	1800	1288	500	1674	1262	527
	24	32	2027	1262	294	2242	1399	296	2067	1292	351	2214	1382	437	2124	1329	459	1872	1315	513	1710	1302	545
2.5	12	18	2144	1502	400	2076	1712	406	1921	1581	478	2050	1696	598	1975	1622	624	1850	1529	670	1775	1454	696
	14	20	2144	1502	400	2230	1712	406	2076	1597	484	2200	1696	605	2125	1640	631	1975	1529	676	1900	1473	709
	16	22	2144	1599	406	2385	1712	411	2208	1597	490	2350	1696	611	2275	1640	644	2125	1529	689	2050	1473	715
	18	25	2299	1714	412	2540	1861	417	2341	1729	495	2500	1845	618	2400	1771	644	2250	1659	696	2150	1584	722
	19	27	2377	1772	419	2628	1959	422	2429	1811	501	2600	1939	624	2500	1864	650	2350	1752	696	2250	1678	722
	22	30	2635	1753	419	2915	1943	422	2694	1795	501	2875	1920	631	2775	1845	657	2500	1790	722	2325	1752	761
	24	32	2816	1753	425	3114	1943	427	2871	1795	506	3075	1920	631	2950	1845	663	2600	1827	741	2375	1808	787
3.5	12	18	3002	2103	633	2906	2397	643	2690	2213	758	2870	2375	948	2765	2270	989	2590	2140	1061	2485	2036	1102
	14	20	3002	2103	633	3123	2397	643	2906	2236	767	3080	2375	958	2975	2297	999	2765	2140	1071	2660	2062	1123
	16	22	3002	2238	643	3339	2397	652	3092	2236	776	3290	2375	968	3185	2297	1020	2975	2140	1092	2870	2062	1133
	18	25	3219	2400	653	3555	2605	660	3277	2421	785	3500	2584	979	3360	2479	1020	3150	2323	1102	3010	2218	1143
	19	27	3327	2481	663	3679	2743	668	3401	2536	794	3640	2714	989	3500	2610	1030	3290	2453	1102	3150	2349	1143
	22	30	3689	2454	663	4081	2720	668	3772	2513	794	4025	2688	999	3885	2584	1040	3500	2505	1143	3255	2453	1205
	24	32	3942	2454	673	4359	2720	677	4019	2513	802	4305	2688	999	4130	2584	1051	3640	2558	1174	3325	2531	1246
5	12	18	4288	3005	1009	4152	3425	1024	3843	3161	1207	4100	3393	1509	3950	3244	1574	3700	3057	1689	3550	2908	1755
	14	20	4288	3005	1009	4461	3425	1024	4152	3194	1221	4400	3393	1525	4250	3281	1591	3950	3057	1706	3800	2945	1788
	16	22	4288	3198	1024	4770	3425	1037	4417	3194	1235	4700	3393	1542	4550	3281	1624	4250	3057	1738	4100	2945	1804
	18	25	4598	3429	1040	5079	3721	1051	4682	3458	1249	5000	3691	1558	4800	3542	1624	4500	3318	1755	4300	3169	1820
	19	27	4753	3544	1056	5256	3919	1064	4858	3623	1264	5200	3877	1574	5000	3728	1640	4700	3504	1755	4500	3355	1820
	22	30	5270	3506	1056	5830	3886	1064	5388	3590	1264	5750	3840	1591	5550	3691	1656	5000	3579	1820	4650	3504	1919
	24	32	5632	3506	1072	6228	3886	1078	5742	3590	1278	6150	3840	1591	5900	3691	1673	5200	3654	1870	4750	3616	1984
6	12	18	5146	3606	1279	4982	4110	1299	4611	3794	1530	4920	4071	1914	4740	3892	1997	4440	3669	2142	4260	3490	2226
	14	20	5146	3606	1279	5353	4110	1299	4982	3833	1549	5280	4071	1934	5100	3937	2018	4740	3669	2163	4560	3534	2267
	16	22	5146	3837	1299	5724	4110	1316	5300	3833	1567	5640	4071	1955	5460	3937	2059	5100	3669	2205	4920	3534	2288
	18	25	5518	4114	1319	6095	4466	1333	5618	4149	1585	6000	4429	1976	5760	4250	2059	5400	3982	2226	5160	3803	2309
	19	27	5704	4253	1339	6307	4703	1350	5830	4347	1603	6240	4653	1997	6000	4474	2080	5640	4205	2226	5400	4026	2309
	22	30	6324	4207	1339	6996	4663	1350	6466	4308	1603	6900	4608	2018	6660	4429	2101	6000	4295	2309	5580	4205	2434
	24	32	6758	4207	1359	7473	4663	1367	6890	4308	1621	7380	4608	2018	7080	4429	2122	6240	4384	2371	5700	4340	2517

EWB : Evaporator Wet Bulb temperature (°C)
EDB : Evaporator Dry Bulb temperature (°C)
(°CDB) : Outdoor Unit Inlet Air Dry Temperature (°C)

TC : Total Capacity (W)
SHC : Sensible Heating
PI : Power Input

	INDOOR		OUTDOOR TEMPERATURE (°CDB)																				
	EWB	EDB	-10			21			27			32			35			40			43		
	°C	°C	TC	SHC	PI	TC	SHC	PI	TC	SHC	PI	TC	SHC	PI	TC	SHC	PI	TC	SHC	PI	TC	SHC	PI
1.2+1.2	12	18	2058	1442	424	1993	1644	431	1844	1518	508	1968	1628	635	1896	1557	662	1776	1467	711	1704	1396	738
	14	20	2058	1442	424	2141	1644	431	1993	1533	514	2112	1628	642	2040	1575	669	1896	1467	718	1824	1414	752
	16	22	2058	1535	431	2290	1644	436	2120	1533	520	2256	1628	649	2184	1575	683	2040	1467	731	1968	1414	759
	18	25	2207	1646	438	2438	1786	442	2247	1660	526	2400	1772	656	2304	1700	683	2160	1593	738	2064	1521	766
	19	27	2282	1701	444	2523	1881	448	2332	1739	532	2496	1861	662	2400	1790	690	2256	1682	738	2160	1611	766
	22	30	2530	1683	444	2798	1865	448	2586	1723	532	2760	1843	669	2664	1772	697	2400	1718	766	2232	1682	807
	24	32	2703	1683	451	2989	1865	453	2756	1723	538	2952	1843	669	2832	1772	704	2496	1754	787	2280	1736	835
1.2+1.8	12	18	2573	1803	566	2491	2055	574	2306	1897	677	2460	2036	846	2370	1946	883	2220	1834	948	2130	1745	984
	14	20	2573	1803	566	2677	2055	574	2491	1917	685	2640	2036	856	2550	1968	892	2370	1834	957	2280	1767	1003
	16	22	2573	1919	575	2862	2055	582	2650	1917	693	2820	2036	865	2730	1968	911	2550	1834	975	2460	1767	1012
	18	25	2759	2057	584	3048	2233	590	2809	2075	701	3000	2215	874	2880	2125	911	2700	1991	984	2580	1901	1021
	19	27	2852	2127	592	3154	2351	597	2915	2174	709	3120	2326	883	3000	2237	920	2820	2103	984	2700	2013	1021
	22	30	3162	2103	592	3498	2332	597	3233	2154	709	3450	2304	892	3330	2215	929	3000	2147	1021	2790	2103	1076
	24	32	3379	2103	601	3737	2332	605	3445	2154	717	3690	2304	892	3540	2215	938	3120	2192	1049	2850	2170	1113
1.2+2.5	12	18	3173	2224	633	3072	2534	643	2843	2340	758	3034	2511	948	2923	2400	989	2738	2262	1061	2627	2152	1102
	14	20	3173	2224	633	3301	2534	643	3072	2364	767	3256	2511	958	3145	2428	999	2923	2262	1071	2812	2179	1123
	16	22	3173	2366	643	3530	2534	652	3268	2364	776	3478	2511	968	3367	2428	1020	3145	2262	1092	3034	2179	1133
	18	25	3403	2537	653	3759	2754	660	3464	2559	785	3700	2731	979	3552	2621	1020	3330	2455	1102	3182	2345	1143
	19	27	3517	2623	663	3889	2900	668	3595	2681	794	3848	2869	989	3700	2759	1030	3478	2593	1102	3330	2483	1143
	22	30	3900	2594	663	4314	2876	668	3987	2656	794	4255	2842	999	4107	2731	1040	3700	2648	1143	3441	2593	1205
	24	32	4167	2594	673	4608	2876	677	4249	2656	802	4551	2842	999	4366	2731	1051	3848	2704	1174	3515	2676	1246
1.2+3.5	12	18	4031	2825	855	3903	3219	868	3612	2972	1023	3854	3189	1279	3713	3049	1334	3478	2874	1432	3337	2733	1487
	14	20	4031	2825	855	4193	3219	868	3903	3003	1035	4136	3189	1293	3995	3084	1348	3713	2874	1446	3572	2769	1515
	16	22	4031	3006	868	4484	3219	879	4152	3003	1047	4418	3189	1307	4277	3084	1376	3995	2874	1473	3854	2769	1529
	18	25	4322	3223	882	4774	3498	891	4401	3250	1059	4700	3469	1321	4512	3329	1376	4230	3119	1487	4042	2979	1543
	19	27	4468	3332	895	4940	3684	902	4567	3405	1071	4888	3645	1334	4700	3504	1390	4418	3294	1487	4230	3154	1543
	22	30	4954	3295	895	5480	3653	902	5065	3374	1071	5405	3610	1348	5217	3469	1404	4700	3364	1543	4371	3294	1626
	24	32	5294	3295	908	5854	3653	914	5397	3374	1083	5781	3610	1348	5546	3469	1418	4888	3434	1585	4465	3399	1682
1.2+5	12	18	5318	3726	1138	5148	4247	1155	4765	3920	1361	5084	4207	1702	4898	4022	1776	4588	3791	1906	4402	3606	1980
	14	20	5318	3726	1138	5531	4247	1155	5148	3961	1377	5456	4207	1721	5270	4068	1795	4898	3791	1924	4712	3652	2017
	16	22	5318	3965	1156	5915	4247	1170	5477	3961	1393	5828	4207	1739	5642	4068	1832	5270	3791	1961	5084	3652	2035
	18	25	5702	4252	1173	6298	4614	1185	5805	4288	1409	6200	4577	1758	5952	4392	1832	5580	4114	1980	5332	3929	2054
	19	27	5894	4395	1191	6517	4859	1201	6024	4492	1425	6448	4808	1776	6200	4623	1850	5828	4346	1980	5580	4161	2054
	22	30	6535	4347	1191	7229	4819	1201	6682	4451	1425	7130	4762	1795	6882	4577	1869	6200	4438	2054	5766	4346	2165
	24	32	6983	4347	1209	7722	4819	1216	7120	4451	1441	7626	4762	1795	7316	4577	1887	6448	4530	2109	5890	4484	2239
1.2+6	12	18	6089	4267	1304	5895	4863	1324	5456	4489	1560	5822	4818	1950	5609	4606	2035	5254	4341	2184	5041	4129	2268
	14	20	6089	4267	1304	6334	4863	1324	5895	4536	1578	6248	4818	1972	6035	4659	2056	5609	4341	2205	5396	4182	2311
	16	22	6089	4540	1324	6773	4863	1341	6272	4536	1597	6674	4818	1993	6461	4659	2099	6035	4341	2247	5822	4182	2332
	18	25	6530	4869	1345	7212	5284	1358	6648	4910	1615	7100	5241	2014	6816	5029	2099	6390	4712	2268	6106	4500	2353
	19	27	6750	5033	1365	7463	5565	1376	6899	5144	1633	7384	5506	2035	7100	5294	2120	6674	4976	2268	6390	4765	2353
	22	30	7483	4978	1365	8279	5518	1376	7651	5097	1633	8165	5453	2056	7881	5241	2141	7100	5082	2353	6603	4976	2480
	24	32	7997	4978	1385	8843	5518	1393	8153	5097	1652	8733	5453	2056	8378	5241	2162	7384	5188	2417	6745	5135	2565
1.8+1.8	12	18	3088	2164	510	2989	2466	518	2767	2276	611	2952	2443	764	2844	2335	797	2664	2201	855	2556	2094	888
	14	20	3088	2164	510	3212	2466	518	2989	2300	618	3168	2443	772	3060	2362	805	2844	2201	863	2736	2121	905
	16	22	3088	2302	518	3434	2466	525	3180	2300	625	3384	2443	780	3276	2362	822	3060	2201	880	2952	2121	913
	18	25	3311	2469	526	3657	2679	532	3371	2490	632	3600	2657	789	3456	2550	822	3240	2389	888	3096	2282	921
	19	27	3422	2552	534	3784	2822	539	3498	2608	639	3744	2792	797	3600	2684	830	3384	2523	888	3240	2416	921
	22	30	3794	2524	534	4198	2798	539	3880	2585	639	4140	2765	805	3996	2657	838	3600	2577	921	3348	2523	971
	24	32	4055	2524	542	4484	2798	545	4134	2585	647	4428	2765	805	4248	2657	847	3744	2631	946	3420	2604	1004

EWB : Evaporator Wet Bulb temperature (°C)
EDB : Evaporator Dry Bulb temperature (°C)
(°CDB) : Outdoor Unit Inlet Air Dry Temperature (°C)

TC : Total Capacity (W)
SHC : Sensible Heating
PI : Power Input

	INDOOR		OUTDOOR TEMPERATURE (°CDB)																				
	EW	EDB	-10			21			27			32			35			40			43		
	°C	°C	TC	SHC	PI	TC	SHC	PI	TC	SHC	PI	TC	SHC	PI	TC	SHC	PI	TC	SHC	PI	TC	SHC	PI
1.8+2.5	12	18	3688	2584	689	3570	2945	699	3305	2719	824	3526	2918	1030	3397	2789	1075	3182	2629	1154	3053	2501	1198
	14	20	3688	2584	689	3836	2945	699	3570	2747	834	3784	2918	1042	3655	2821	1086	3397	2629	1165	3268	2533	1221
	16	22	3688	2750	700	4102	2945	708	3798	2747	844	4042	2918	1053	3913	2821	1109	3655	2629	1187	3526	2533	1232
	18	25	3955	2949	710	4368	3200	718	4026	2974	853	4300	3174	1064	4128	3046	1109	3870	2854	1198	3698	2725	1243
	19	27	4088	3048	721	4520	3370	727	4178	3115	863	4472	3334	1075	4300	3206	1120	4042	3014	1198	3870	2886	1243
	22	30	4532	3015	721	5014	3342	727	4634	3087	863	4945	3302	1086	4773	3174	1131	4300	3078	1243	3999	3014	1310
	24	32	4843	3015	732	5356	3342	736	4938	3087	873	5289	3302	1086	5074	3174	1142	4472	3142	1277	4085	3110	1355
1.8+3.5	12	18	4546	3185	984	4401	3630	999	4073	3351	1177	4346	3596	1472	4187	3438	1536	3922	3241	1648	3763	3082	1712
	14	20	4546	3185	984	4728	3630	999	4401	3386	1191	4664	3596	1488	4505	3478	1552	4187	3241	1664	4028	3122	1744
	16	22	4546	3389	999	5056	3630	1012	4682	3386	1205	4982	3596	1504	4823	3478	1584	4505	3241	1696	4346	3122	1760
	18	25	4874	3634	1015	5384	3945	1025	4963	3665	1219	5300	3912	1520	5088	3754	1584	4770	3517	1712	4558	3359	1776
	19	27	5039	3757	1030	5571	4154	1038	5150	3840	1233	5512	4110	1536	5300	3952	1600	4982	3715	1712	4770	3557	1776
	22	30	5586	3716	1030	6180	4119	1038	5712	3805	1233	6095	4070	1552	5883	3912	1616	5300	3794	1776	4929	3715	1872
	24	32	5970	3716	1046	6601	4119	1052	6086	3805	1247	6519	4070	1552	6254	3912	1632	5512	3873	1824	5035	3833	1936
1.8+5	12	18	5832	4087	1488	5646	4658	1511	5226	4300	1781	5576	4614	2226	5372	4411	2323	5032	4158	2493	4828	3955	2589
	14	20	5832	4087	1488	6067	4658	1511	5646	4344	1802	5984	4614	2251	5780	4462	2347	5372	4158	2517	5168	4006	2638
	16	22	5832	4349	1512	6487	4658	1531	6007	4344	1823	6392	4614	2275	6188	4462	2396	5780	4158	2565	5576	4006	2662
	18	25	6254	4663	1535	6908	5061	1551	6367	4703	1844	6800	5020	2299	6528	4817	2396	6120	4513	2589	5848	4310	2686
	19	27	6465	4820	1558	7148	5330	1571	6607	4927	1864	7072	5273	2323	6800	5070	2420	6392	4766	2589	6120	4563	2686
	22	30	7167	4768	1558	7929	5285	1571	7328	4882	1864	7820	5222	2347	7548	5020	2444	6800	4867	2686	6324	4766	2831
	24	32	7659	4768	1581	8469	5285	1590	7809	4882	1885	8364	5222	2347	8024	5020	2468	7072	4969	2759	6460	4918	2928
1.8+6	12	18	6089	4267	1507	5895	4863	1530	5456	4489	1803	5822	4818	2254	5609	4606	2352	5254	4341	2524	5041	4129	2622
	14	20	6089	4267	1507	6334	4863	1530	5895	4536	1824	6248	4818	2279	6035	4659	2377	5609	4341	2548	5396	4182	2671
	16	22	6089	4540	1530	6773	4863	1550	6272	4536	1845	6674	4818	2303	6461	4659	2426	6035	4341	2597	5822	4182	2695
	18	25	6530	4869	1554	7212	5284	1570	6648	4910	1866	7100	5241	2328	6816	5029	2426	6390	4712	2622	6106	4500	2720
	19	27	6750	5033	1577	7463	5565	1590	6899	5144	1888	7384	5506	2352	7100	5294	2450	6674	4976	2622	6390	4765	2720
	22	30	7483	4978	1577	8279	5518	1590	7651	5097	1888	8165	5453	2377	7881	5241	2475	7100	5082	2720	6603	4976	2867
	24	32	7997	4978	1601	8843	5518	1610	8153	5097	1909	8733	5453	2377	8378	5241	2499	7384	5188	2793	6745	5135	2965
2.5+2.5	12	18	4288	3005	867	4152	3425	880	3843	3161	1038	4100	3393	1297	3950	3244	1354	3700	3057	1452	3550	2908	1509
	14	20	4288	3005	867	4461	3425	880	4152	3194	1050	4400	3393	1311	4250	3281	1368	3950	3057	1466	3800	2945	1537
	16	22	4288	3198	881	4770	3425	892	4417	3194	1062	4700	3393	1325	4550	3281	1396	4250	3057	1495	4100	2945	1551
	18	25	4598	3429	894	5079	3721	903	4682	3458	1074	5000	3691	1340	4800	3542	1396	4500	3318	1509	4300	3169	1565
	19	27	4753	3544	908	5256	3919	915	4858	3623	1086	5200	3877	1354	5000	3728	1410	4700	3504	1509	4500	3355	1565
	22	30	5270	3506	908	5830	3886	915	5388	3590	1086	5750	3840	1368	5550	3691	1424	5000	3579	1565	4650	3504	1650
	24	32	5632	3506	921	6228	3886	927	5742	3590	1099	6150	3840	1368	5900	3691	1438	5200	3654	1607	4750	3616	1706
2.5+3.5	12	18	5146	3606	1199	4982	4110	1217	4611	3794	1435	4920	4071	1794	4740	3892	1872	4440	3669	2009	4260	3490	2087
	14	20	5146	3606	1199	5353	4110	1217	4982	3833	1452	5280	4071	1814	5100	3937	1892	4740	3669	2028	4560	3534	2126
	16	22	5146	3837	1218	5724	4110	1233	5300	3833	1469	5640	4071	1833	5460	3937	1931	5100	3669	2067	4920	3534	2145
	18	25	5518	4114	1237	6095	4466	1250	5618	4149	1485	6000	4429	1853	5760	4250	1931	5400	3982	2087	5160	3803	2165
	19	27	5704	4253	1256	6307	4703	1266	5830	4347	1502	6240	4653	1872	6000	4474	1950	5640	4205	2087	5400	4026	2165
	22	30	6324	4207	1256	6996	4663	1266	6466	4308	1502	6900	4608	1892	6660	4429	1970	6000	4295	2165	5580	4205	2282
	24	32	6758	4207	1274	7473	4663	1282	6890	4308	1519	7380	4608	1892	7080	4429	1989	6240	4384	2223	5700	4340	2360
2.5+5	12	18	6089	4267	1556	5895	4863	1580	5456	4489	1862	5822	4818	2328	5609	4606	2429	5254	4341	2606	5041	4129	2707
	14	20	6089	4267	1556	6334	4863	1580	5895	4536	1884	6248	4818	2353	6035	4659	2454	5609	4341	2631	5396	4182	2758
	16	22	6089	4540	1580	6773	4863	1600	6272	4536	1905	6674	4818	2378	6461	4659	2505	6035	4341	2682	5822	4182	2783
	18	25	6530	4869	1605	7212	5284	1621	6648	4910	1927	7100	5241	2404	6816	5029	2505	6390	4712	2707	6106	4500	2808
	19	27	6750	5033	1629	7463	5565	1642	6899	5144	1949	7384	5506	2429	7100	5294	2530	7093	4976	2707	6390	4765	2808
	22	30	7483	4978	1629	8279	5518	1642	7651	5097	1949	8165	5453	2454	7881	5241	2555	7540	5082	2808	6603	4976	2960
	24	32	7997	4978	1653	8843	5518	1663	8153	5097	1971	8733	5453	2454	8378	5241	2581	5048	5188	2884	6745	5135	3061

EWB : Evaporator Wet Bulb temperature (°C)
EDB : Evaporator Dry Bulb temperature (°C)
(°CDB) : Outdoor Unit Inlet Air Dry Temperature (°C)

TC : Total Capacity (W)
SHC : Sensible Heating
PI : Power Input

	INDOOR		OUTDOOR TEMPERATURE (°CDB)																				
	EWB	EDB	-10			21			27			32			35			40			43		
	°C	°C	TC	SHC	PI	TC	SHC	PI	TC	SHC	PI	TC	SHC	PI	TC	SHC	PI	TC	SHC	PI	TC	SHC	PI
2.5+6	12	18	6089	4267	1507	5895	4863	1530	5456	4489	1803	5822	4818	2254	5609	4606	2352	5432	4341	2524	5041	4129	2622
	14	20	6089	4267	1507	6334	4863	1530	5895	4536	1824	6248	4818	2279	6035	4659	2377	5815	4341	2548	5396	4182	2671
	16	22	6089	4540	1530	6773	4863	1550	6272	4536	1845	6674	4818	2303	6461	4659	2426	6134	4341	2597	5822	4182	2695
	18	25	6530	4869	1554	7212	5284	1570	6648	4910	1866	7100	5241	2328	6816	5029	2426	6390	4712	2622	6106	4500	2720
	19	27	6750	5033	1577	7463	5565	1590	6899	5144	1888	7384	5506	2352	7100	5294	2450	7093	4976	2622	6390	4765	2720
	22	30	7483	4978	1577	8279	5518	1590	7651	5097	1888	8165	5453	2377	7881	5241	2475	7540	5082	2720	6603	4976	2867
	24	32	7997	4978	1601	8843	5518	1610	8153	5097	1909	8733	5453	2377	8378	5241	2499	4977	5188	2793	6745	5135	2965
3.5+3.5	12	18	6004	4207	1618	5812	4795	1642	5380	4426	1935	5740	4750	2420	5530	4541	2525	5355	4280	2709	4970	4071	2814
	14	20	6004	4207	1618	6245	4795	1642	5812	4472	1958	6160	4750	2446	5950	4593	2551	5733	4280	2735	5320	4123	2867
	16	22	6004	4477	1643	6678	4795	1664	6183	4472	1981	6580	4750	2472	6370	4593	2604	6048	4280	2788	5740	4123	2893
	18	25	6438	4800	1668	7111	5210	1685	6554	4841	2003	7000	5167	2499	6720	4958	2604	6300	4645	2814	6020	4437	2919
	19	27	6655	4962	1693	7358	5486	1707	6802	5072	2026	7280	5428	2525	7000	5219	2630	6993	4906	2814	6300	4697	2919
	22	30	7378	4908	1693	8162	5440	1707	7544	5025	2026	8050	5376	2551	7770	5167	2656	7434	5011	2919	6510	4906	3077
	24	32	7884	4908	1719	8719	5440	1728	8038	5025	2049	8610	5376	2551	8260	5167	2683	5048	5115	2998	6650	5063	3182
3.5+5	12	18	6089	4267	1556	5895	4863	1580	5456	4489	1862	5822	4818	2328	5609	4606	2429	5432	4341	2606	5041	4129	2707
	14	20	6089	4267	1556	6334	4863	1580	5895	4536	1884	6248	4818	2353	6035	4659	2454	5815	4341	2631	5396	4182	2758
	16	22	6089	4540	1580	6773	4863	1600	6272	4536	1905	6674	4818	2378	6461	4659	2505	6134	4341	2682	5822	4182	2783
	18	25	6530	4869	1605	7212	5284	1621	6648	4910	1927	7100	5241	2404	6816	5029	2505	6390	4712	2707	6106	4500	2808
	19	27	6750	5033	1629	7463	5565	1642	6899	5144	1949	7384	5506	2429	7100	5294	2530	7093	4976	2707	6390	4765	2808
	22	30	7483	4978	1629	8279	5518	1642	7651	5097	1949	8165	5453	2454	7881	5241	2555	7540	5082	2808	6603	4976	2960
	24	32	7997	4978	1653	8843	5518	1663	8153	5097	1971	8733	5453	2454	8378	5241	2581	5048	5188	2884	6745	5135	3061
3.5+6	12	18	6089	4267	1507	5895	4863	1530	5456	4489	1803	5822	4818	2254	5609	4606	2352	5432	4341	2524	5041	4129	2622
	14	20	6089	4267	1507	6334	4863	1530	5895	4536	1824	6248	4818	2279	6035	4659	2377	5815	4341	2548	5396	4182	2671
	16	22	6089	4540	1530	6773	4863	1550	6272	4536	1845	6674	4818	2303	6461	4659	2426	6134	4341	2597	5822	4182	2695
	18	25	6530	4869	1554	7212	5284	1570	6648	4910	1866	7100	5241	2328	6816	5029	2426	6390	4712	2622	6106	4500	2720
	19	27	6750	5033	1577	7463	5565	1590	6899	5144	1888	7384	5506	2352	7100	5294	2450	7093	4976	2622	6390	4765	2720
	22	30	7483	4978	1577	8279	5518	1590	7651	5097	1888	8165	5453	2377	7881	5241	2475	7540	5082	2720	6603	4976	2867
	24	32	7997	4978	1601	8843	5518	1610	8153	5097	1909	8733	5453	2377	8378	5241	2499	5048	5188	2793	6745	5135	2965
5+5	12	18	6089	4267	1556	5895	4863	1580	5456	4489	1862	5822	4818	2328	5609	4606	2429	5432	4341	2606	5041	4129	2707
	14	20	6089	4267	1556	6334	4863	1580	5895	4536	1884	6248	4818	2353	6035	4659	2454	5815	4341	2631	5396	4182	2758
	16	22	6089	4540	1580	6773	4863	1600	6272	4536	1905	6674	4818	2378	6461	4659	2505	6134	4341	2682	5822	4182	2783
	18	25	6530	4869	1605	7212	5284	1621	6648	4910	1927	7100	5241	2404	6816	5029	2505	6390	4712	2707	6106	4500	2808
	19	27	6750	5033	1629	7463	5565	1642	6899	5144	1949	7384	5506	2429	7100	5294	2530	7093	4976	2707	6390	4765	2808
	22	30	7483	4978	1629	8279	5518	1642	7651	5097	1949	8165	5453	2454	7881	5241	2555	7540	5082	2808	6603	4976	2960
	24	32	7997	4978	1653	8843	5518	1663	8153	5097	1971	8733	5453	2454	8378	5241	2581	5048	5188	2884	6745	5135	3061
5+6	12	18	6089	4267	1451	5895	4863	1473	5456	4489	1737	5822	4818	2171	5609	4606	2266	5432	4341	2431	5041	4129	2525
	14	20	6089	4267	1451	6334	4863	1473	5895	4536	1757	6248	4818	2195	6035	4659	2289	5815	4341	2454	5396	4182	2572
	16	22	6089	4540	1474	6773	4863	1493	6272	4536	1777	6674	4818	2218	6461	4659	2336	6134	4341	2502	5822	4182	2596
	18	25	6530	4869	1497	7212	5284	1512	6648	4910	1798	7100	5241	2242	6816	5029	2336	6390	4712	2525	6106	4500	2620
	19	27	6750	5033	1520	7463	5565	1532	6899	5144	1818	7384	5506	2266	7100	5294	2360	7093	4976	2525	6390	4765	2620
	22	30	7483	4978	1520	8279	5518	1532	7651	5097	1818	8165	5453	2289	7881	5241	2384	7540	5082	2620	6603	4976	2761
	24	32	7997	4978	1542	8843	5518	1551	8153	5097	1839	8733	5453	2289	8378	5241	2407	2560	5188	2690	6745	5135	2856
1.2+1.2+1.2	12	18	3088	2164	664	2989	2466	674	2767	2276	795	2952	2443	994	2844	2335	1037	2754	2201	1112	2556	2094	1156
	14	20	3088	2164	664	3212	2466	674	2989	2300	804	3168	2443	1004	3060	2362	1048	2948	2201	1123	2736	2121	1177
	16	22	3088	2302	675	3434	2466	683	3180	2300	813	3384	2443	1015	3276	2362	1069	3110	2201	1145	2952	2121	1188
	18	25	3311	2469	685	3657	2679	692	3371	2490	823	3600	2657	1026	3456	2550	1069	3240	2389	1156	3096	2282	1199
	19	27	3422	2552	695	3784	2822	701	3498	2608	832	3744	2792	1037	3600	2684	1080	3596	2523	1156	3240	2416	1199
	22	30	3794	2524	695	4198	2798	701	3880	2585	832	4140	2765	1048	3996	2657	1091	3823	2577	1199	3348	2523	1264
	24	32	4055	2524	706	4484	2798	710	4134	2585	841	4428	2765	1048	4248	2657	1102	2986	2631	1231	3420	2604	1307

EWB : Evaporator Wet Bulb temperature (°C)
EDB : Evaporator Dry Bulb temperature (°C)
(°CDB) : Outdoor Unit Inlet Air Dry Temperature (°C)

TC : Total Capacity (W)
SHC : Sensible Heating
PI : Power Input

	INDOOR		OUTDOOR TEMPERATURE (°CDB)																				
	EWB	EDB	-10			21			27			32			35			40			43		
	°C	°C	TC	SHC	PI	TC	SHC	PI	TC	SHC	PI	TC	SHC	PI	TC	SHC	PI	TC	SHC	PI	TC	SHC	PI
1.2+1.2+1.8	16	22	3602	2686	781	4007	2877	791	3710	2683	941	3948	2850	1175	3822	2756	1238	3629	2568	1325	3444	2474	1375
	18	25	3863	2880	793	4267	3126	801	3933	2905	952	4200	3100	1188	4032	2975	1238	3780	2787	1338	3612	2662	1388
	19	27	3993	2977	805	4415	3292	811	4081	3043	963	4368	3257	1200	4200	3132	1250	4196	2944	1338	3780	2818	1388
	22	30	4427	2945	805	4897	3264	811	4526	3015	963	4830	3226	1213	4662	3100	1263	4460	3006	1388	3906	2944	1463
	24	32	4731	2945	817	5231	3264	822	4823	3015	974	5166	3226	1213	4956	3100	1275	3484	3069	1425	3990	3038	1513
	12	18	4203	2945	892	4069	3356	905	3766	3098	1067	4018	3325	1334	3871	3179	1392	3749	2996	1494	3479	2850	1552
	14	20	4203	2945	892	4372	3356	905	4069	3131	1079	4312	3325	1349	4165	3215	1407	4013	2996	1508	3724	2886	1581
1.2+1.2+2.5	16	22	4203	3134	906	4675	3356	917	4328	3131	1092	4606	3325	1363	4459	3215	1436	4234	2996	1537	4018	2886	1595
	18	25	4506	3360	920	4978	3647	929	4588	3389	1105	4900	3617	1378	4704	3471	1436	4410	3252	1552	4214	3106	1610
	19	27	4658	3473	934	5151	3841	941	4761	3550	1117	5096	3800	1392	4900	3654	1450	4895	3434	1552	4410	3288	1610
	22	30	5165	3436	934	5713	3808	941	5281	3518	1117	5635	3763	1407	5439	3617	1465	5204	3507	1610	4557	3434	1697
	24	32	5519	3436	948	6103	3808	953	5627	3518	1130	6027	3763	1407	5782	3617	1479	4195	3581	1653	4655	3544	1755
	12	18	5060	3546	978	4899	4041	993	4534	3731	1170	4838	4003	1463	4661	3827	1526	4514	3607	1638	4189	3431	1701
	14	20	5060	3546	978	5264	4041	993	4899	3769	1184	5192	4003	1479	5015	3871	1542	4832	3607	1654	4484	3475	1733
1.2+1.2+3.5	16	22	5060	3773	993	5629	4041	1006	5212	3769	1197	5546	4003	1495	5369	3871	1574	5098	3607	1685	4838	3475	1749
	18	25	5426	4046	1008	5993	4391	1019	5524	4080	1211	5900	4355	1511	5664	4179	1574	5310	3915	1701	5074	3739	1765
	19	27	5609	4182	1024	6202	4624	1032	5733	4275	1225	6136	4575	1526	5900	4399	1590	5894	4135	1701	5310	3959	1765
	22	30	6219	4137	1024	6879	4585	1032	6358	4236	1225	6785	4531	1542	6549	4355	1606	6266	4223	1765	5487	4135	1860
	24	32	6645	4137	1039	7348	4585	1045	6775	4236	1239	7257	4531	1542	6962	4355	1622	5048	4311	1813	5605	4267	1924
	12	18	6089	4267	1359	5895	4863	1380	5456	4489	1626	5822	4818	2033	5609	4606	2122	5432	4341	2276	5041	4129	2365
	14	20	6089	4267	1359	6334	4863	1380	5895	4536	1645	6248	4818	2055	6035	4659	2144	5815	4341	2298	5396	4182	2409
1.2+1.2+5	16	22	6089	4540	1380	6773	4863	1398	6272	4536	1664	6674	4818	2077	6461	4659	2188	6134	4341	2343	5822	4182	2431
	18	25	6530	4869	1402	7212	5284	1416	6648	4910	1684	7100	5241	2100	6816	5029	2188	6390	4712	2365	6106	4500	2453
	19	27	6750	5033	1423	7463	5565	1434	6899	5144	1703	7384	5506	2122	7100	5294	2210	7093	4976	2365	6390	4765	2453
	22	30	7483	4978	1423	8279	5518	1434	7651	5097	1703	8165	5453	2144	7881	5241	2232	7540	5082	2453	6603	4976	2586
	24	32	7997	4978	1444	8843	5518	1452	8153	5097	1722	8733	5453	2144	8378	5241	2254	5048	5188	2519	6745	5135	2674
	12	18	6089	4267	1341	5895	4863	1361	5456	4489	1604	5822	4818	2006	5609	4606	2093	5432	4341	2245	5041	4129	2333
	14	20	6089	4267	1341	6334	4863	1361	5895	4536	1623	6248	4818	2027	6035	4659	2115	5815	4341	2267	5396	4182	2376
1.2+1.2+6	16	22	6089	4540	1362	6773	4863	1379	6272	4536	1642	6674	4818	2049	6461	4659	2158	6134	4341	2311	5822	4182	2398
	18	25	6530	4869	1383	7212	5284	1397	6648	4910	1661	7100	5241	2071	6816	5029	2158	6390	4712	2333	6106	4500	2420
	19	27	6750	5033	1404	7463	5565	1415	6899	5144	1680	7384	5506	2093	7100	5294	2180	7093	4976	2333	6390	4765	2420
	22	30	7483	4978	1404	8279	5518	1415	7651	5097	1680	8165	5453	2115	7881	5241	2202	7540	5082	2420	6603	4976	2551
	24	32	7997	4978	1425	8843	5518	1433	8153	5097	1698	8733	5453	2115	8378	5241	2224	3413	5188	2485	6745	5135	2638
	12	18	4117	2885	892	3986	3288	905	3689	3035	1067	3936	3257	1334	3792	3114	1392	3672	2935	1494	3408	2792	1552
	14	20	4117	2885	892	4282	3288	905	3986	3067	1079	4224	3257	1349	4080	3150	1407	3931	2935	1508	3648	2827	1581
1.2+1.8+1.8	16	22	4117	3070	906	4579	3288	917	4240	3067	1092	4512	3257	1363	4368	3150	1436	4147	2935	1537	3936	2827	1595
	18	25	4414	3292	920	4876	3572	929	4494	3320	1105	4800	3543	1378	4608	3400	1436	4320	3185	1552	4128	3042	1610
	19	27	4563	3402	934	5046	3762	941	4664	3478	1117	4992	3722	1392	4800	3579	1450	4795	3364	1552	4320	3221	1610
	22	30	5059	3365	934	5597	3731	941	5173	3446	1117	5520	3686	1407	5328	3543	1465	5098	3436	1610	4464	3364	1697
	24	32	5406	3365	948	5978	3731	953	5512	3446	1130	5904	3686	1407	5664	3543	1479	3911	3507	1653	4560	3472	1755
	12	18	4717	3305	978	4567	3767	993	4227	3478	1170	4510	3732	1463	4345	3568	1526	4208	3363	1638	3905	3199	1701
	14	20	4717	3305	978	4907	3767	993	4567	3514	1184	4840	3732	1479	4675	3609	1542	4505	3363	1654	4180	3240	1733
1.2+1.8+2.5	16	22	4717	3517	993	5247	3767	1006	4858	3514	1197	5170	3732	1495	5005	3609	1574	4752	3363	1685	4510	3240	1749
	18	25	5058	3772	1008	5587	4093	1019	5150	3804	1211	5500	4060	1511	5280	3896	1574	4950	3650	1701	4730	3486	1765
	19	27	5229	3899	1024	5781	4311	1032	5344	3985	1225	5720	4265	1526	5500	4101	1590	5495	3855	1701	4950	3691	1765
	22	30	5797	3856	1024	6413	4275	1032	5927	3949	1225	6325	4224	1542	6105	4060	1606	5841	3937	1765	5115	3855	1860
	24	32	6195	3856	1039	6850	4275	1045	6316	3949	1239	6765	4224	1542	6490	4060	1622	4622	4019	1813	5225	3978	1924
	16	22	3602	2686	781	4007	2877	791	3710	2683	941	3948	2850	1175	3822	2756	1238	3629	2568	1325	3444	2474	1375
	18	25	3863	2880	793	4267	3126	801	3933	2905	952	4200	3100	1188	4032	2975	1238	3780	2787	1338	3612	2662	1388

EWB : Evaporator Wet Bulb temperature (°C)
EDB : Evaporator Dry Bulb temperature (°C)
(°CDB) : Outdoor Unit Inlet Air Dry Temperature (°C)

TC : Total Capacity (W)
SHC : Sensible Heating
PI : Power Input

	INDOOR		OUTDOOR TEMPERATURE (°CDB)																				
	EWB	EDB	-10			21			27			32			35			40			43		
	°C	°C	TC	SHC	PI	TC	SHC	PI	TC	SHC	PI	TC	SHC	PI	TC	SHC	PI	TC	SHC	PI	TC	SHC	PI
1.2+1.8+3.5	12	18	5575	3906	1076	5397	4452	1093	4995	4110	1288	5330	4410	1610	5135	4217	1680	4973	3974	1803	4615	3780	1873
	14	20	5575	3906	1076	5799	4452	1093	5397	4153	1303	5720	4410	1628	5525	4265	1698	5324	3974	1820	4940	3829	1908
	16	22	5575	4157	1093	6201	4452	1107	5742	4153	1318	6110	4410	1645	5915	4265	1733	5616	3974	1855	5330	3829	1925
	18	25	5978	4457	1110	6603	4838	1121	6086	4495	1333	6500	4798	1663	6240	4604	1733	5850	4313	1873	5590	4120	1943
	19	27	6179	4608	1127	6833	5095	1136	6316	4709	1348	6760	5040	1680	6500	4847	1750	6494	4556	1873	5850	4362	1943
	22	30	6851	4557	1127	7579	5052	1136	7005	4666	1348	7475	4992	1698	7215	4798	1768	6903	4653	1943	6045	4556	2048
	24	32	7321	4557	1144	8096	5052	1150	7464	4666	1363	7995	4992	1698	7670	4798	1785	5048	4750	1995	6175	4701	2118
1.2+1.8+5	12	18	6089	4267	1359	5895	4863	1380	5456	4489	1626	5822	4818	2033	5609	4606	2122	5432	4341	2276	5041	4129	2365
	14	20	6089	4267	1359	6334	4863	1380	5895	4536	1645	6248	4818	2055	6035	4659	2144	5815	4341	2298	5396	4182	2409
	16	22	6089	4540	1380	6773	4863	1398	6272	4536	1664	6674	4818	2077	6461	4659	2188	6134	4341	2343	5822	4182	2431
	18	25	6530	4869	1402	7212	5284	1416	6648	4910	1684	7100	5241	2100	6816	5029	2188	6390	4712	2365	6106	4500	2453
	19	27	6750	5033	1423	7463	5565	1434	6899	5144	1703	7384	5506	2122	7100	5294	2210	7093	4976	2365	6390	4765	2453
	22	30	7483	4978	1423	8279	5518	1434	7651	5097	1703	8165	5453	2144	7881	5241	2232	7540	5082	2453	6603	4976	2586
	24	32	7997	4978	1444	8843	5518	1452	8153	5097	1722	8733	5453	2144	8378	5241	2254	5048	5188	2519	6745	5135	2674
1.2+1.8+6	12	18	6089	4267	1341	5895	4863	1361	5456	4489	1604	5822	4818	2006	5609	4606	2093	5432	4341	2245	5041	4129	2333
	14	20	6089	4267	1341	6334	4863	1361	5895	4536	1623	6248	4818	2027	6035	4659	2115	5815	4341	2267	5396	4182	2376
	16	22	6089	4540	1362	6773	4863	1379	6272	4536	1642	6674	4818	2049	6461	4659	2158	6134	4341	2311	5822	4182	2398
	18	25	6530	4869	1383	7212	5284	1397	6648	4910	1661	7100	5241	2071	6816	5029	2158	6390	4712	2333	6106	4500	2420
	19	27	6750	5033	1404	7463	5565	1415	6899	5144	1680	7384	5506	2093	7100	5294	2180	7093	4976	2333	6390	4765	2420
	22	30	7483	4978	1404	8279	5518	1415	7651	5097	1680	8165	5453	2115	7881	5241	2202	7540	5082	2420	6603	4976	2551
	24	32	7997	4978	1425	8843	5518	1433	8153	5097	1698	8733	5453	2115	8378	5241	2224	4408	5188	2485	6745	5135	2638
1.2+2.5+2.5	12	18	5318	3726	978	5148	4247	993	4765	3920	1170	5084	4207	1463	4898	4022	1526	4743	3791	1638	4402	3606	1701
	14	20	5318	3726	978	5531	4247	993	5148	3961	1184	5456	4207	1479	5270	4068	1542	5078	3791	1654	4712	3652	1733
	16	22	5318	3965	993	5915	4247	1006	5477	3961	1197	5828	4207	1495	5642	4068	1574	5357	3791	1685	5084	3652	1749
	18	25	5702	4252	1008	6298	4614	1019	5805	4288	1211	6200	4577	1511	5952	4392	1574	5580	4114	1701	5332	3929	1765
	19	27	5894	4395	1024	6517	4859	1032	6024	4492	1225	6448	4808	1526	6200	4623	1590	6194	4346	1701	5580	4161	1765
	22	30	6535	4347	1024	7229	4819	1032	6682	4451	1225	7130	4762	1542	6882	4577	1606	6584	4438	1765	5766	4346	1860
	24	32	6983	4347	1039	7722	4819	1045	7120	4451	1239	7626	4762	1542	7316	4577	1622	5048	4530	1813	5890	4484	1924
1.2+2.5+3.5	12	18	6089	4267	1359	5895	4863	1380	5456	4489	1626	5822	4818	2033	5609	4606	2122	5432	4341	2276	5041	4129	2365
	14	20	6089	4267	1359	6334	4863	1380	5895	4536	1645	6248	4818	2055	6035	4659	2144	5815	4341	2298	5396	4182	2409
	16	22	6089	4540	1380	6773	4863	1398	6272	4536	1664	6674	4818	2077	6461	4659	2188	6134	4341	2343	5822	4182	2431
	18	25	6530	4869	1402	7212	5284	1416	6648	4910	1684	7100	5241	2100	6816	5029	2188	6390	4712	2365	6106	4500	2453
	19	27	6750	5033	1423	7463	5565	1434	6899	5144	1703	7384	5506	2122	7100	5294	2210	7093	4976	2365	6390	4765	2453
	22	30	7483	4978	1423	8279	5518	1434	7651	5097	1703	8165	5453	2144	7881	5241	2232	7540	5082	2453	6603	4976	2586
	24	32	7997	4978	1444	8843	5518	1452	8153	5097	1722	8733	5453	2144	8378	5241	2254	5048	5188	2519	6745	5135	2674
1.2+2.5+5	12	18	6089	4267	1341	5895	4863	1361	5456	4489	1604	5822	4818	2006	5609	4606	2093	5432	4341	2245	5041	4129	2333
	14	20	6089	4267	1341	6334	4863	1361	5895	4536	1623	6248	4818	2027	6035	4659	2115	5815	4341	2267	5396	4182	2376
	16	22	6089	4540	1362	6773	4863	1379	6272	4536	1642	6674	4818	2049	6461	4659	2158	6134	4341	2311	5822	4182	2398
	18	25	6530	4869	1383	7212	5284	1397	6648	4910	1661	7100	5241	2071	6816	5029	2158	6390	4712	2333	6106	4500	2420
	19	27	6750	5033	1404	7463	5565	1415	6899	5144	1680	7384	5506	2093	7100	5294	2180	7093	4976	2333	6390	4765	2420
	22	30	7483	4978	1404	8279	5518	1415	7651	5097	1680	8165	5453	2115	7881	5241	2202	7540	5082	2420	6603	4976	2551
	24	32	7997	4978	1425	8843	5518	1433	8153	5097	1698	8733	5453	2115	8378	5241	2224	5048	5188	2485	6745	5135	2638
1.2+2.5+6	12	18	6089	4267	1341	5895	4863	1361	5456	4489	1604	5822	4818	2006	5609	4606	2093	5432	4341	2245	5041	4129	2333
	14	20	6089	4267	1341	6334	4863	1361	5895	4536	1623	6248	4818	2027	6035	4659	2115	5815	4341	2267	5396	4182	2376
	16	22	6089	4540	1362	6773	4863	1379	6272	4536	1642	6674	4818	2049	6461	4659	2158	6134	4341	2311	5822	4182	2398
	18	25	6530	4869	1383	7212	5284	1397	6648	4910	1661	7100	5241	2071	6816	5029	2158	6390	4712	2333	6106	4500	2420
	19	27	6750	5033	1404	7463	5565	1415	6899	5144	1680	7384	5506	2093	7100	5294	2180	7093	4976	2333	6390	4765	2420
	22	30	7483	4978	1404	8279	5518	1415	7651	5097	1680	8165	5453	2115	7881	5241	2202	7540	5082	2420	6603	4976	2551
	24	32	7997	4978	1425	8843	5518	1433	8153	5097	1698	8733	5453	2115	8378	5241	2224	5048	5188	2485	6745	5135	2638

EWB : Evaporator Wet Bulb temperature (°C)
EDB : Evaporator Dry Bulb temperature (°C)
(°CDB) : Outdoor Unit Inlet Air Dry Temperature (°C)

TC : Total Capacity (W)
SHC : Sensible Heating
PI : Power Input

	INDOOR		OUTDOOR TEMPERATURE (°CDB)																				
	EWB	EDB	-10			21			27			32			35			40			43		
	°C	°C	TC	SHC	PI	TC	SHC	PI	TC	SHC	PI	TC	SHC	PI	TC	SHC	PI	TC	SHC	PI	TC	SHC	PI
1.2+3.5+3.5	12	18	6089	4267	1359	5895	4863	1380	5456	4489	1626	5822	4818	2033	5609	4606	2122	5432	4341	2276	5041	4129	2365
	14	20	6089	4267	1359	6334	4863	1380	5895	4536	1645	6248	4818	2055	6035	4659	2144	5815	4341	2298	5396	4182	2409
	16	22	6089	4540	1380	6773	4863	1398	6272	4536	1664	6674	4818	2077	6461	4659	2188	6134	4341	2343	5822	4182	2431
	18	25	6530	4869	1402	7212	5284	1416	6648	4910	1684	7100	5241	2100	6816	5029	2188	6390	4712	2365	6106	4500	2453
	19	27	6750	5033	1423	7463	5565	1434	6899	5144	1703	7384	5506	2122	7100	5294	2210	7093	4976	2365	6390	4765	2453
	22	30	7483	4978	1423	8279	5518	1434	7651	5097	1703	8165	5453	2144	7881	5241	2232	7540	5082	2453	6603	4976	2586
	24	32	7997	4978	1444	8843	5518	1452	8153	5097	1722	8733	5453	2144	8378	5241	2254	5048	5188	2519	6745	5135	2674
1.2+3.5+5	12	18	6089	4267	1341	5895	4863	1361	5456	4489	1604	5822	4818	2006	5609	4606	2093	5432	4341	2245	5041	4129	2333
	14	20	6089	4267	1341	6334	4863	1361	5895	4536	1623	6248	4818	2027	6035	4659	2115	5815	4341	2267	5396	4182	2376
	16	22	6089	4540	1362	6773	4863	1379	6272	4536	1642	6674	4818	2049	6461	4659	2158	6134	4341	2311	5822	4182	2398
	18	25	6530	4869	1383	7212	5284	1397	6648	4910	1661	7100	5241	2071	6816	5029	2158	6390	4712	2333	6106	4500	2420
	19	27	6750	5033	1404	7463	5565	1415	6899	5144	1680	7384	5506	2093	7100	5294	2180	7093	4976	2333	6390	4765	2420
	22	30	7483	4978	1404	8279	5518	1415	7651	5097	1680	8165	5453	2115	7881	5241	2202	7540	5082	2420	6603	4976	2551
	24	32	7997	4978	1425	8843	5518	1433	8153	5097	1698	8733	5453	2115	8378	5241	2224	5048	5188	2485	6745	5135	2638
1.2+3.5+6	12	18	6089	4267	1341	5895	4863	1361	5456	4489	1604	5822	4818	2006	5609	4606	2093	5432	4341	2245	5041	4129	2333
	14	20	6089	4267	1341	6334	4863	1361	5895	4536	1623	6248	4818	2027	6035	4659	2115	5815	4341	2267	5396	4182	2376
	16	22	6089	4540	1362	6773	4863	1379	6272	4536	1642	6674	4818	2049	6461	4659	2158	6134	4341	2311	5822	4182	2398
	18	25	6530	4869	1383	7212	5284	1397	6648	4910	1661	7100	5241	2071	6816	5029	2158	6390	4712	2333	6106	4500	2420
	19	27	6750	5033	1404	7463	5565	1415	6899	5144	1680	7384	5506	2093	7100	5294	2180	7093	4976	2333	6390	4765	2420
	22	30	7483	4978	1404	8279	5518	1415	7651	5097	1680	8165	5453	2115	7881	5241	2202	7540	5082	2420	6603	4976	2551
	24	32	7997	4978	1425	8843	5518	1433	8153	5097	1698	8733	5453	2115	8378	5241	2224	5048	5188	2485	6745	5135	2638
1.2+5+5	12	18	6089	4267	1341	5895	4863	1361	5456	4489	1604	5822	4818	2006	5609	4606	2093	5432	4341	2245	5041	4129	2333
	14	20	6089	4267	1341	6334	4863	1361	5895	4536	1623	6248	4818	2027	6035	4659	2115	5815	4341	2267	5396	4182	2376
	16	22	6089	4540	1362	6773	4863	1379	6272	4536	1642	6674	4818	2049	6461	4659	2158	6134	4341	2311	5822	4182	2398
	18	25	6530	4869	1383	7212	5284	1397	6648	4910	1661	7100	5241	2071	6816	5029	2158	6390	4712	2333	6106	4500	2420
	19	27	6750	5033	1404	7463	5565	1415	6899	5144	1680	7384	5506	2093	7100	5294	2180	7093	4976	2333	6390	4765	2420
	22	30	7483	4978	1404	8279	5518	1415	7651	5097	1680	8165	5453	2115	7881	5241	2202	7540	5082	2420	6603	4976	2551
	24	32	7997	4978	1425	8843	5518	1433	8153	5097	1698	8733	5453	2115	8378	5241	2224	3839	5188	2485	6745	5135	2638
1.8+1.8+1.8	12	18	4631	3245	769	4484	3699	780	4150	3414	920	4428	3664	1150	4266	3503	1200	4131	3302	1288	3834	3141	1338
	14	20	4631	3245	769	4818	3699	780	4484	3450	931	4752	3664	1163	4590	3543	1213	4423	3302	1300	4104	3181	1363
	16	22	4631	3453	781	5152	3699	791	4770	3450	941	5076	3664	1175	4914	3543	1238	4666	3302	1325	4428	3181	1375
	18	25	4966	3703	793	5486	4019	801	5056	3735	952	5400	3986	1188	5184	3825	1238	4860	3584	1338	4644	3422	1388
	19	27	5134	3828	805	5676	4232	811	5247	3912	963	5616	4187	1200	5400	4026	1250	5395	3785	1338	4860	3624	1388
	22	30	5692	3786	805	6296	4197	811	5819	3877	963	6210	4147	1213	5994	3986	1263	5735	3865	1388	5022	3785	1463
	24	32	6082	3786	817	6726	4197	822	6201	3877	974	6642	4147	1213	6372	3986	1275	4337	3946	1425	5130	3906	1513
1.8+1.8+2.5	12	18	5232	3666	978	5065	4178	993	4688	3857	1170	5002	4139	1463	4819	3957	1526	4667	3730	1638	4331	3548	1701
	14	20	5232	3666	978	5442	4178	993	5065	3897	1184	5368	4139	1479	5185	4003	1542	4996	3730	1654	4636	3593	1733
	16	22	5232	3901	993	5819	4178	1006	5388	3897	1197	5734	4139	1495	5551	4003	1574	5270	3730	1685	5002	3593	1749
	18	25	5610	4183	1008	6197	4540	1019	5712	4219	1211	6100	4503	1511	5856	4321	1574	5490	4048	1701	5246	3866	1765
	19	27	5799	4324	1024	6412	4781	1032	5927	4419	1225	6344	4730	1526	6100	4548	1590	6094	4275	1701	5490	4094	1765
	22	30	6429	4277	1024	7113	4741	1032	6574	4379	1225	7015	4685	1542	6771	4503	1606	6478	4366	1765	5673	4275	1860
	24	32	6871	4277	1039	7598	4741	1045	7005	4379	1239	7503	4685	1542	7198	4503	1622	5048	4457	1813	5795	4412	1924
1.8+1.8+3.5	12	18	6089	4267	1359	5895	4863	1380	5456	4489	1626	5822	4818	2033	5609	4606	2122	5432	4341	2276	5041	4129	2365
	14	20	6089	4267	1359	6334	4863	1380	5895	4536	1645	6248	4818	2055	6035	4659	2144	5815	4341	2298	5396	4182	2409
	16	22	6089	4540	1380	6773	4863	1398	6272	4536	1664	6674	4818	2077	6461	4659	2188	6134	4341	2343	5822	4182	2431
	18	25	6530	4869	1402	7212	5284	1416	6648	4910	1684	7100	5241	2100	6816	5029	2188	6390	4712	2365	6106	4500	2453
	19	27	6750	5033	1423	7463	5565	1434	6899	5144	1703	7384	5506	2122	7100	5294	2210	7093	4976	2365	6390	4765	2453
	22	30	7483	4978	1423	8279	5518	1434	7651	5097	1703	8165	5453	2144	7881	5241	2232	7540	5082	2453	6603	4976	2586
	24	32	7997	4978	1444	8843	5518	1452	8153	5097	1722	8733	5453	2144	8378	5241	2254	5048	5188	2519	6745	5135	2674

EWB : Evaporator Wet Bulb temperature (°C)
EDB : Evaporator Dry Bulb temperature (°C)
(°CDB) : Outdoor Unit Inlet Air Dry Temperature (°C)

TC : Total Capacity (W)
SHC : Sensible Heating
PI : Power Input

	INDOOR		OUTDOOR TEMPERATURE (°CDB)																				
	EWB	EDB	-10			21			27			32			35			40			43		
	°C	°C	TC	SHC	PI	TC	SHC	PI	TC	SHC	PI	TC	SHC	PI	TC	SHC	PI	TC	SHC	PI	TC	SHC	PI
1.8+1.8+5	12	18	6089	4267	1341	5895	4863	1361	5456	4489	1604	5822	4818	2006	5609	4606	2093	5432	4341	2245	5041	4129	2333
	14	20	6089	4267	1341	6334	4863	1361	5895	4536	1623	6248	4818	2027	6035	4659	2115	5815	4341	2267	5396	4182	2376
	16	22	6089	4540	1362	6773	4863	1379	6272	4536	1642	6674	4818	2049	6461	4659	2158	6134	4341	2311	5822	4182	2398
	18	25	6530	4869	1383	7212	5284	1397	6648	4910	1661	7100	5241	2071	6816	5029	2158	6390	4712	2333	6106	4500	2420
	19	27	6750	5033	1404	7463	5565	1415	6899	5144	1680	7384	5506	2093	7100	5294	2180	7093	4976	2333	6390	4765	2420
	22	30	7483	4978	1404	8279	5518	1415	7651	5097	1680	8165	5453	2115	7881	5241	2202	7540	5082	2420	6603	4976	2551
	24	32	7997	4978	1425	8843	5518	1433	8153	5097	1698	8733	5453	2115	8378	5241	2224	5048	5188	2485	6745	5135	2638
1.8+1.8+6	12	18	6089	4267	1328	5895	4863	1349	5456	4489	1589	5822	4818	1987	5609	4606	2074	5432	4341	2225	5041	4129	2311
	14	20	6089	4267	1328	6334	4863	1349	5895	4536	1608	6248	4818	2009	6035	4659	2095	5815	4341	2246	5396	4182	2354
	16	22	6089	4540	1349	6773	4863	1366	6272	4536	1627	6674	4818	2030	6461	4659	2138	6134	4341	2290	5822	4182	2376
	18	25	6530	4869	1370	7212	5284	1384	6648	4910	1645	7100	5241	2052	6816	5029	2138	6390	4712	2311	6106	4500	2398
	19	27	6750	5033	1391	7463	5565	1402	6899	5144	1664	7384	5506	2074	7100	5294	2160	7093	4976	2311	6390	4765	2398
	22	30	7483	4978	1391	8279	5518	1402	7651	5097	1664	8165	5453	2095	7881	5241	2182	7540	5082	2398	6603	4976	2527
	24	32	7997	4978	1412	8843	5518	1420	8153	5097	1683	8733	5453	2095	8378	5241	2203	4835	5188	2462	6745	5135	2614
1.8+2.5+2.5	12	18	5832	4087	1255	5646	4658	1274	5226	4300	1501	5576	4614	1877	5372	4411	1958	5202	4158	2101	4828	3955	2183
	14	20	5832	4087	1255	6067	4658	1274	5646	4344	1519	5984	4614	1897	5780	4462	1979	5569	4158	2122	5168	4006	2224
	16	22	5832	4349	1274	6487	4658	1290	6007	4344	1536	6392	4614	1918	6188	4462	2020	5875	4158	2162	5576	4006	2244
	18	25	6254	4663	1294	6908	5061	1307	6367	4703	1554	6800	5020	1938	6528	4817	2020	6120	4513	2183	5848	4310	2264
	19	27	6465	4820	1313	7148	5330	1324	6607	4927	1572	7072	5273	1958	6800	5070	2040	6793	4766	2183	6120	4563	2264
	22	30	7167	4768	1313	7929	5285	1324	7328	4882	1572	7820	5222	1979	7548	5020	2060	7222	4867	2264	6324	4766	2387
	24	32	7659	4768	1333	8469	5285	1341	7809	4882	1589	8364	5222	1979	8024	5020	2081	5048	4969	2326	6460	4918	2468
1.8+2.5+3.5	12	18	6089	4267	1359	5895	4863	1380	5456	4489	1626	5822	4818	2033	5609	4606	2122	5432	4341	2276	5041	4129	2365
	14	20	6089	4267	1359	6334	4863	1380	5895	4536	1645	6248	4818	2055	6035	4659	2144	5815	4341	2298	5396	4182	2409
	16	22	6089	4540	1380	6773	4863	1398	6272	4536	1664	6674	4818	2077	6461	4659	2188	6134	4341	2343	5822	4182	2431
	18	25	6530	4869	1402	7212	5284	1416	6648	4910	1684	7100	5241	2100	6816	5029	2188	6390	4712	2365	6106	4500	2453
	19	27	6750	5033	1423	7463	5565	1434	6899	5144	1703	7384	5506	2122	7100	5294	2210	7093	4976	2365	6390	4765	2453
	22	30	7483	4978	1423	8279	5518	1434	7651	5097	1703	8165	5453	2144	7881	5241	2232	7540	5082	2453	6603	4976	2586
	24	32	7997	4978	1444	8843	5518	1452	8153	5097	1722	8733	5453	2144	8378	5241	2254	5048	5188	2519	6745	5135	2674
1.8+2.5+5	12	18	6089	4267	1341	5895	4863	1361	5456	4489	1604	5822	4818	2006	5609	4606	2093	5432	4341	2245	5041	4129	2333
	14	20	6089	4267	1341	6334	4863	1361	5895	4536	1623	6248	4818	2027	6035	4659	2115	5815	4341	2267	5396	4182	2376
	16	22	6089	4540	1362	6773	4863	1379	6272	4536	1642	6674	4818	2049	6461	4659	2158	6134	4341	2311	5822	4182	2398
	18	25	6530	4869	1383	7212	5284	1397	6648	4910	1661	7100	5241	2071	6816	5029	2158	6390	4712	2333	6106	4500	2420
	19	27	6750	5033	1404	7463	5565	1415	6899	5144	1680	7384	5506	2093	7100	5294	2180	7093	4976	2333	6390	4765	2420
	22	30	7483	4978	1404	8279	5518	1415	7651	5097	1680	8165	5453	2115	7881	5241	2202	7540	5082	2420	6603	4976	2551
	24	32	7997	4978	1425	8843	5518	1433	8153	5097	1698	8733	5453	2115	8378	5241	2224	5048	5188	2485	6745	5135	2638
1.8+2.5+6	12	18	6089	4267	1328	5895	4863	1349	5456	4489	1589	5822	4818	1987	5609	4606	2074	5432	4341	2225	5041	4129	2311
	14	20	6089	4267	1328	6334	4863	1349	5895	4536	1608	6248	4818	2009	6035	4659	2095	5815	4341	2246	5396	4182	2354
	16	22	6089	4540	1349	6773	4863	1366	6272	4536	1627	6674	4818	2030	6461	4659	2138	6134	4341	2290	5822	4182	2376
	18	25	6530	4869	1370	7212	5284	1384	6648	4910	1645	7100	5241	2052	6816	5029	2138	6390	4712	2311	6106	4500	2398
	19	27	6750	5033	1391	7463	5565	1402	6899	5144	1664	7384	5506	2074	7100	5294	2160	7093	4976	2311	6390	4765	2398
	22	30	7483	4978	1391	8279	5518	1402	7651	5097	1664	8165	5453	2095	7881	5241	2182	7540	5082	2398	6603	4976	2527
	24	32	7997	4978	1412	8843	5518	1420	8153	5097	1683	8733	5453	2095	8378	5241	2203	5048	5188	2462	6745	5135	2614
1.8+3.5+3.5	12	18	6089	4267	1359	5895	4863	1380	5456	4489	1626	5822	4818	2033	5609	4606	2122	5432	4341	2276	5041	4129	2365
	14	20	6089	4267	1359	6334	4863	1380	5895	4536	1645	6248	4818	2055	6035	4659	2144	5815	4341	2298	5396	4182	2409
	16	22	6089	4540	1380	6773	4863	1398	6272	4536	1664	6674	4818	2077	6461	4659	2188	6134	4341	2343	5822	4182	2431
	18	25	6530	4869	1402	7212	5284	1416	6648	4910	1684	7100	5241	2100	6816	5029	2188	6390	4712	2365	6106	4500	2453
	19	27	6750	5033	1423	7463	5565	1434	6899	5144	1703	7384	5506	2122	7100	5294	2210	7093	4976	2365	6390	4765	2453
	22	30	7483	4978	1423	8279	5518	1434	7651	5097	1703	8165	5453	2144	7881	5241	2232	7540	5082	2453	6603	4976	2586
	24	32	7997	4978	1444	8843	5518	1452	8153	5097	1722	8733	5453	2144	8378	5241	2254	5048	5188	2519	6745	5135	2674

EWB : Evaporator Wet Bulb temperature (°C)
EDB : Evaporator Dry Bulb temperature (°C)
(°CDB) : Outdoor Unit Inlet Air Dry Temperature (°C)

TC : Total Capacity (W)
SHC : Sensible Heating
PI : Power Input

	INDOOR		OUTDOOR TEMPERATURE (°CDB)																				
	EWB	EDB	-10			21			27			32			35			40			43		
	°C	°C	TC	SHC	PI	TC	SHC	PI	TC	SHC	PI	TC	SHC	PI	TC	SHC	PI	TC	SHC	PI	TC	SHC	PI
1.8+3.5+5	12	18	6089	4267	1341	5895	4863	1361	5456	4489	1604	5822	4818	2006	5609	4606	2093	5432	4341	2245	5041	4129	2333
	14	20	6089	4267	1341	6334	4863	1361	5895	4536	1623	6248	4818	2027	6035	4659	2115	5815	4341	2267	5396	4182	2376
	16	22	6089	4540	1362	6773	4863	1379	6272	4536	1642	6674	4818	2049	6461	4659	2158	6134	4341	2311	5822	4182	2398
	18	25	6530	4869	1383	7212	5284	1397	6648	4910	1661	7100	5241	2071	6816	5029	2158	6390	4712	2333	6106	4500	2420
	19	27	6750	5033	1404	7463	5565	1415	6899	5144	1680	7384	5506	2093	7100	5294	2180	7093	4976	2333	6390	4765	2420
	22	30	7483	4978	1404	8279	5518	1415	7651	5097	1680	8165	5453	2115	7881	5241	2202	7540	5082	2420	6603	4976	2551
	24	32	7997	4978	1425	8843	5518	1433	8153	5097	1698	8733	5453	2115	8378	5241	2224	5048	5188	2485	6745	5135	2638
2.5+2.5+2.5	12	18	6089	4267	1359	5895	4863	1380	5456	4489	1626	5822	4818	2033	5609	4606	2122	5432	4341	2276	5041	4129	2365
	14	20	6089	4267	1359	6334	4863	1380	5895	4536	1645	6248	4818	2055	6035	4659	2144	5815	4341	2298	5396	4182	2409
	16	22	6089	4540	1380	6773	4863	1398	6272	4536	1664	6674	4818	2077	6461	4659	2188	6134	4341	2343	5822	4182	2431
	18	25	6530	4869	1402	7212	5284	1416	6648	4910	1684	7100	5241	2100	6816	5029	2188	6390	4712	2365	6106	4500	2453
	19	27	6750	5033	1423	7463	5565	1434	6899	5144	1703	7384	5506	2122	7100	5294	2210	7093	4976	2365	6390	4765	2453
	22	30	7483	4978	1423	8279	5518	1434	7651	5097	1703	8165	5453	2144	7881	5241	2232	7540	5082	2453	6603	4976	2586
	24	32	7997	4978	1444	8843	5518	1452	8153	5097	1722	8733	5453	2144	8378	5241	2254	5048	5188	2519	6745	5135	2674
2.5+2.5+3.5	12	18	6089	4267	1359	5895	4863	1380	5456	4489	1626	5822	4818	2033	5609	4606	2122	5432	4341	2276	5041	4129	2365
	14	20	6089	4267	1359	6334	4863	1380	5895	4536	1645	6248	4818	2055	6035	4659	2144	5815	4341	2298	5396	4182	2409
	16	22	6089	4540	1380	6773	4863	1398	6272	4536	1664	6674	4818	2077	6461	4659	2188	6134	4341	2343	5822	4182	2431
	18	25	6530	4869	1402	7212	5284	1416	6648	4910	1684	7100	5241	2100	6816	5029	2188	6390	4712	2365	6106	4500	2453
	19	27	6750	5033	1423	7463	5565	1434	6899	5144	1703	7384	5506	2122	7100	5294	2210	7093	4976	2365	6390	4765	2453
	22	30	7483	4978	1423	8279	5518	1434	7651	5097	1703	8165	5453	2144	7881	5241	2232	7540	5082	2453	6603	4976	2586
	24	32	7997	4978	1444	8843	5518	1452	8153	5097	1722	8733	5453	2144	8378	5241	2254	5048	5188	2519	6745	5135	2674
2.5+2.5+5	12	18	6089	4267	1341	5895	4863	1361	5456	4489	1604	5822	4818	2006	5609	4606	2093	5432	4341	2245	5041	4129	2333
	14	20	6089	4267	1341	6334	4863	1361	5895	4536	1623	6248	4818	2027	6035	4659	2115	5815	4341	2267	5396	4182	2376
	16	22	6089	4540	1362	6773	4863	1379	6272	4536	1642	6674	4818	2049	6461	4659	2158	6134	4341	2311	5822	4182	2398
	18	25	6530	4869	1383	7212	5284	1397	6648	4910	1661	7100	5241	2071	6816	5029	2158	6390	4712	2333	6106	4500	2420
	19	27	6750	5033	1404	7463	5565	1415	6899	5144	1680	7384	5506	2093	7100	5294	2180	7093	4976	2333	6390	4765	2420
	22	30	7483	4978	1404	8279	5518	1415	7651	5097	1680	8165	5453	2115	7881	5241	2202	7540	5082	2420	6603	4976	2551
	24	32	7997	4978	1425	8843	5518	1433	8153	5097	1698	8733	5453	2115	8378	5241	2224	5048	5188	2485	6745	5135	2638
2.5+2.5+6	12	18	6089	4267	1328	5895	4863	1349	5456	4489	1589	5822	4818	1987	5609	4606	2074	5432	4341	2225	5041	4129	2311
	14	20	6089	4267	1328	6334	4863	1349	5895	4536	1608	6248	4818	2009	6035	4659	2095	5815	4341	2246	5396	4182	2354
	16	22	6089	4540	1349	6773	4863	1366	6272	4536	1627	6674	4818	2030	6461	4659	2138	6134	4341	2290	5822	4182	2376
	18	25	6530	4869	1370	7212	5284	1384	6648	4910	1645	7100	5241	2052	6816	5029	2138	6390	4712	2311	6106	4500	2398
	19	27	6750	5033	1391	7463	5565	1402	6899	5144	1664	7384	5506	2074	7100	5294	2160	7093	4976	2311	6390	4765	2398
	22	30	7483	4978	1391	8279	5518	1402	7651	5097	1664	8165	5453	2095	7881	5241	2182	7540	5082	2398	6603	4976	2527
	24	32	7997	4978	1412	8843	5518	1420	8153	5097	1683	8733	5453	2095	8378	5241	2203	5048	5188	2462	6745	5135	2614
2.5+3.5+3.5	12	18	6089	4267	1359	5895	4863	1380	5456	4489	1626	5822	4818	2033	5609	4606	2122	5432	4341	2276	5041	4129	2365
	14	20	6089	4267	1359	6334	4863	1380	5895	4536	1645	6248	4818	2055	6035	4659	2144	5815	4341	2298	5396	4182	2409
	16	22	6089	4540	1380	6773	4863	1398	6272	4536	1664	6674	4818	2077	6461	4659	2188	6134	4341	2343	5822	4182	2431
	18	25	6530	4869	1402	7212	5284	1416	6648	4910	1684	7100	5241	2100	6816	5029	2188	6390	4712	2365	6106	4500	2453
	19	27	6750	5033	1423	7463	5565	1434	6899	5144	1703	7384	5506	2122	7100	5294	2210	7093	4976	2365	6390	4765	2453
	22	30	7483	4978	1423	8279	5518	1434	7651	5097	1703	8165	5453	2144	7881	5241	2232	7540	5082	2453	6603	4976	2586
	24	32	7997	4978	1444	8843	5518	1452	8153	5097	1722	8733	5453	2144	8378	5241	2254	5048	5188	2519	6745	5135	2674
2.5+3.5+5	12	18	6089	4267	1341	5895	4863	1361	5456	4489	1604	5822	4818	2006	5609	4606	2093	5432	4341	2245	5041	4129	2333
	14	20	6089	4267	1341	6334	4863	1361	5895	4536	1623	6248	4818	2027	6035	4659	2115	5815	4341	2267	5396	4182	2376
	16	22	6089	4540	1362	6773	4863	1379	6272	4536	1642	6674	4818	2049	6461	4659	2158	6134	4341	2311	5822	4182	2398
	18	25	6530	4869	1383	7212	5284	1397	6648	4910	1661	7100	5241	2071	6816	5029	2158	6390	4712	2333	6106	4500	2420
	19	27	6750	5033	1404	7463	5565	1415	6899	5144	1680	7384	5506	2093	7100	5294	2180	7093	4976	2333	6390	4765	2420
	22	30	7483	4978	1404	8279	5518	1415	7651	5097	1680	8165	5453	2115	7881	5241	2202	7540	5082	2420	6603	4976	2551
	24	32	7997	4978	1425	8843	5518	1433	8153	5097	1698	8733	5453	2115	8378	5241	2224	5048	5188	2485	6745	5135	2638

EWB : Evaporator Wet Bulb temperature (°C)
EDB : Evaporator Dry Bulb temperature (°C)
(°CDB) : Outdoor Unit Inlet Air Dry Temperature (°C)

TC : Total Capacity (W)
SHC : Sensible Heating
PI : Power Input

	INDOOR		OUTDOOR TEMPERATURE (°CDB)																				
	EW	EDB	-10			21			27			32			35			40			43		
	°C	°C	TC	SHC	PI	TC	SHC	PI	TC	SHC	PI	TC	SHC	PI	TC	SHC	PI	TC	SHC	PI	TC	SHC	PI
3.5+3.5+3.5	12	18	6089	4267	1359	5895	4863	1380	5456	4489	1626	5822	4818	2033	5609	4606	2122	5432	4341	2276	5041	4129	2365
	14	20	6089	4267	1359	6334	4863	1380	5895	4536	1645	6248	4818	2055	6035	4659	2144	5815	4341	2298	5396	4182	2409
	16	22	6089	4540	1380	6773	4863	1398	6272	4536	1664	6674	4818	2077	6461	4659	2188	6134	4341	2343	5822	4182	2431
	18	25	6530	4869	1402	7212	5284	1416	6648	4910	1684	7100	5241	2100	6816	5029	2188	6390	4712	2365	6106	4500	2453
	19	27	6750	5033	1423	7463	5565	1434	6899	5144	1703	7384	5506	2122	7100	5294	2210	7093	4976	2365	6390	4765	2453
	22	30	7483	4978	1423	8279	5518	1434	7651	5097	1703	8165	5453	2144	7881	5241	2232	7540	5082	2453	6603	4976	2586
	24	32	7997	4978	1444	8843	5518	1452	8153	5097	1722	8733	5453	2144	8378	5241	2254	3413	5188	2519	6745	5135	2674
1.2+1.2+1.2+1.2	12	18	4117	2885	873	3986	3288	887	3689	3035	1045	3936	3257	1306	3792	3114	1363	3672	2935	1463	3408	2792	1519
	14	20	4117	2885	873	4282	3288	887	3986	3067	1057	4224	3257	1321	4080	3150	1377	3931	2935	1477	3648	2827	1548
	16	22	4117	3070	887	4579	3288	898	4240	3067	1069	4512	3257	1335	4368	3150	1406	4147	2935	1505	3936	2827	1562
	18	25	4414	3292	901	4876	3572	910	4494	3320	1082	4800	3543	1349	4608	3400	1406	4320	3185	1519	4128	3042	1576
	19	27	4563	3402	914	5046	3762	922	4664	3478	1094	4992	3722	1363	4800	3579	1420	4795	3364	1519	4320	3221	1576
	22	30	5059	3365	914	5597	3731	922	5173	3446	1094	5520	3686	1377	5328	3543	1434	5098	3436	1576	4464	3364	1661
	24	32	5406	3365	928	5978	3731	933	5512	3446	1106	5904	3686	1377	5664	3543	1448	3839	3507	1619	4560	3472	1718
1.2+1.2+1.2+1.8	12	18	4631	3245	1015	4484	3699	1030	4150	3414	1214	4428	3664	1518	4266	3503	1584	4131	3302	1700	3834	3141	1766
	14	20	4631	3245	1015	4818	3699	1030	4484	3450	1228	4752	3664	1535	4590	3543	1601	4423	3302	1716	4104	3181	1799
	16	22	4631	3453	1031	5152	3699	1044	4770	3450	1243	5076	3664	1551	4914	3543	1634	4666	3302	1749	4428	3181	1815
	18	25	4966	3703	1047	5486	4019	1057	5056	3735	1257	5400	3986	1568	5184	3825	1634	4860	3584	1766	4644	3422	1832
	19	27	5134	3828	1062	5676	4232	1071	5247	3912	1271	5616	4187	1584	5400	4026	1650	5395	3785	1766	4860	3624	1832
	22	30	5692	3786	1062	6296	4197	1071	5819	3877	1271	6210	4147	1601	5994	3986	1667	5735	3865	1832	5022	3785	1931
	24	32	6082	3786	1078	6726	4197	1084	6201	3877	1286	6642	4147	1601	6372	3986	1683	4337	3946	1881	5130	3906	1997
1.2+1.2+1.2+2.5	12	18	5232	3666	1162	5065	4178	1180	4688	3857	1391	5002	4139	1739	4819	3957	1814	4667	3730	1947	4331	3548	2022
	14	20	5232	3666	1162	5442	4178	1180	5065	3897	1407	5368	4139	1758	5185	4003	1833	4996	3730	1966	4636	3593	2060
	16	22	5232	3901	1181	5819	4178	1196	5388	3897	1423	5734	4139	1777	5551	4003	1871	5270	3730	2003	5002	3593	2079
	18	25	5610	4183	1199	6197	4540	1211	5712	4219	1440	6100	4503	1796	5856	4321	1871	5490	4048	2022	5246	3866	2098
	19	27	5799	4324	1217	6412	4781	1227	5927	4419	1456	6344	4730	1814	6100	4548	1890	6094	4275	2022	5490	4094	2098
	22	30	6429	4277	1217	7113	4741	1227	6574	4379	1456	7015	4685	1833	6771	4503	1909	6478	4366	2098	5673	4275	2211
	24	32	6871	4277	1235	7598	4741	1242	7005	4379	1472	7503	4685	1833	7198	4503	1928	5048	4457	2155	5795	4412	2287
1.2+1.2+1.2+3.5	12	18	6089	4267	1316	5895	4863	1336	5456	4489	1575	5822	4818	1969	5609	4606	2054	5432	4341	2204	5041	4129	2290
	14	20	6089	4267	1316	6334	4863	1336	5895	4536	1593	6248	4818	1990	6035	4659	2076	5815	4341	2226	5396	4182	2333
	16	22	6089	4540	1337	6773	4863	1354	6272	4536	1612	6674	4818	2012	6461	4659	2119	6134	4341	2268	5822	4182	2354
	18	25	6530	4869	1357	7212	5284	1371	6648	4910	1630	7100	5241	2033	6816	5029	2119	6390	4712	2290	6106	4500	2375
	19	27	6750	5033	1378	7463	5565	1389	6899	5144	1649	7384	5506	2054	7100	5294	2140	7093	4976	2290	6390	4765	2375
	22	30	7483	4978	1378	8279	5518	1389	7651	5097	1649	8165	5453	2076	7881	5241	2161	7540	5082	2375	6603	4976	2504
	24	32	7997	4978	1398	8843	5518	1406	8153	5097	1667	8733	5453	2076	8378	5241	2183	5048	5188	2440	6745	5135	2589
1.2+1.2+1.2+5	12	18	6089	4267	1316	5895	4863	1336	5456	4489	1575	5822	4818	1969	5609	4606	2054	5432	4341	2204	5041	4129	2290
	14	20	6089	4267	1316	6334	4863	1336	5895	4536	1593	6248	4818	1990	6035	4659	2076	5815	4341	2226	5396	4182	2333
	16	22	6089	4540	1337	6773	4863	1354	6272	4536	1612	6674	4818	2012	6461	4659	2119	6134	4341	2268	5822	4182	2354
	18	25	6530	4869	1357	7212	5284	1371	6648	4910	1630	7100	5241	2033	6816	5029	2119	6390	4712	2290	6106	4500	2375
	19	27	6750	5033	1378	7463	5565	1389	6899	5144	1649	7384	5506	2054	7100	5294	2140	7093	4976	2290	6390	4765	2375
	22	30	7483	4978	1378	8279	5518	1389	7651	5097	1649	8165	5453	2076	7881	5241	2161	7540	5082	2375	6603	4976	2504
	24	32	7997	4978	1398	8843	5518	1406	8153	5097	1667	8733	5453	2076	8378	5241	2183	5048	5188	2440	6745	5135	2589
1.2+1.2+1.2+6	12	18	6089	4267	1316	5895	4863	1336	5456	4489	1575	5822	4818	1969	5609	4606	2054	5432	4341	2204	5041	4129	2290
	14	20	6089	4267	1316	6334	4863	1336	5895	4536	1593	6248	4818	1990	6035	4659	2076	5815	4341	2226	5396	4182	2333
	16	22	6089	4540	1337	6773	4863	1354	6272	4536	1612	6674	4818	2012	6461	4659	2119	6134	4341	2268	5822	4182	2354
	18	25	6530	4869	1357	7212	5284	1371	6648	4910	1630	7100	5241	2033	6816	5029	2119	6390	4712	2290	6106	4500	2375
	19	27	6750	5033	1378	7463	5565	1389	6899	5144	1649	7384	5506	2054	7100	5294	2140	7093	4976	2290	6390	4765	2375
	22	30	7483	4978	1378	8279	5518	1389	7651	5097	1649	8165	5453	2076	7881	5241	2161	7540	5082	2375	6603	4976	2504
	24	32	7997	4978	1398	8843	5518	1406	8153	5097	1667	8733	5453	2076	8378	5241	2183	4266	5188	2440	6745	5135	2589

EWB : Evaporator Wet Bulb temperature (°C)
EDB : Evaporator Dry Bulb temperature (°C)
(°CDB) : Outdoor Unit Inlet Air Dry Temperature (°C)

TC : Total Capacity (W)
SHC : Sensible Heating
PI : Power Input

	INDOOR		OUTDOOR TEMPERATURE (°CDB)																				
	EWB	EDB	-10			21			27			32			35			40			43		
	°C	°C	TC	SHC	PI	TC	SHC	PI	TC	SHC	PI	TC	SHC	PI	TC	SHC	PI	TC	SHC	PI	TC	SHC	PI
1.2+1.2+1.8+1.8	12	18	5146	3606	1138	4982	4110	1155	4611	3794	1361	4920	4071	1702	4740	3892	1776	4590	3669	1906	4260	3490	1980
	14	20	5146	3606	1138	5353	4110	1155	4982	3833	1377	5280	4071	1721	5100	3937	1795	4914	3669	1924	4560	3534	2017
	16	22	5146	3837	1156	5724	4110	1170	5300	3833	1393	5640	4071	1739	5460	3937	1832	5184	3669	1961	4920	3534	2035
	18	25	5518	4114	1173	6095	4466	1185	5618	4149	1409	6000	4429	1758	5760	4250	1832	5400	3982	1980	5160	3803	2054
	19	27	5704	4253	1191	6307	4703	1201	5830	4347	1425	6240	4653	1776	6000	4474	1850	5994	4205	1980	5400	4026	2054
	22	30	6324	4207	1191	6996	4663	1201	6466	4308	1425	6900	4608	1795	6660	4429	1869	6372	4295	2054	5580	4205	2165
	24	32	6758	4207	1209	7473	4663	1216	6890	4308	1441	7380	4608	1795	7080	4429	1887	4764	4384	2109	5700	4340	2239
1.2+1.2+1.8+2.5	12	18	5746	4027	1236	5563	4589	1255	5149	4236	1479	5494	4546	1849	5293	4346	1930	5126	4097	2070	4757	3897	2151
	14	20	5746	4027	1236	5978	4589	1255	5563	4281	1496	5896	4546	1869	5695	4396	1950	5487	4097	2090	5092	3947	2191
	16	22	5746	4285	1256	6392	4589	1271	5918	4281	1514	6298	4546	1889	6097	4396	1990	5789	4097	2131	5494	3947	2211
	18	25	6162	4594	1275	6806	4987	1288	6273	4634	1531	6700	4946	1910	6432	4746	1990	6030	4446	2151	5762	4246	2231
	19	27	6369	4749	1294	7043	5251	1304	6510	4854	1549	6968	5196	1930	6700	4996	2010	6693	4696	2151	6030	4496	2231
	22	30	7062	4698	1294	7812	5207	1304	7220	4810	1549	7705	5146	1950	7437	4946	2030	7115	4796	2231	6231	4696	2352
	24	32	7546	4698	1313	8345	5207	1321	7694	4810	1566	8241	5146	1950	7906	4946	2050	5048	4896	2291	6365	4846	2432
1.2+1.2+1.8+3.5	12	18	6089	4267	1316	5895	4863	1336	5456	4489	1575	5822	4818	1969	5609	4606	2054	5432	4341	2204	5041	4129	2290
	14	20	6089	4267	1316	6334	4863	1336	5895	4536	1593	6248	4818	1990	6035	4659	2076	5815	4341	2226	5396	4182	2333
	16	22	6089	4540	1337	6773	4863	1354	6272	4536	1612	6674	4818	2012	6461	4659	2119	6134	4341	2268	5822	4182	2354
	18	25	6530	4869	1357	7212	5284	1371	6648	4910	1630	7100	5241	2033	6816	5029	2119	6390	4712	2290	6106	4500	2375
	19	27	6750	5033	1378	7463	5565	1389	6899	5144	1649	7384	5506	2054	7100	5294	2140	7093	4976	2290	6390	4765	2375
	22	30	7483	4978	1378	8279	5518	1389	7651	5097	1649	8165	5453	2076	7881	5241	2161	7540	5082	2375	6603	4976	2504
	24	32	7997	4978	1398	8843	5518	1406	8153	5097	1667	8733	5453	2076	8378	5241	2183	5048	5188	2440	6745	5135	2589
1.2+1.2+1.8+5	12	18	6089	4267	1316	5895	4863	1336	5456	4489	1575	5822	4818	1969	5609	4606	2054	5432	4341	2204	5041	4129	2290
	14	20	6089	4267	1316	6334	4863	1336	5895	4536	1593	6248	4818	1990	6035	4659	2076	5815	4341	2226	5396	4182	2333
	16	22	6089	4540	1337	6773	4863	1354	6272	4536	1612	6674	4818	2012	6461	4659	2119	6134	4341	2268	5822	4182	2354
	18	25	6530	4869	1357	7212	5284	1371	6648	4910	1630	7100	5241	2033	6816	5029	2119	6390	4712	2290	6106	4500	2375
	19	27	6750	5033	1378	7463	5565	1389	6899	5144	1649	7384	5506	2054	7100	5294	2140	7093	4976	2290	6390	4765	2375
	22	30	7483	4978	1378	8279	5518	1389	7651	5097	1649	8165	5453	2076	7881	5241	2161	7540	5082	2375	6603	4976	2504
	24	32	7997	4978	1398	8843	5518	1406	8153	5097	1667	8733	5453	2076	8378	5241	2183	5048	5188	2440	6745	5135	2589
1.2+1.2+1.8+6	12	18	6089	4267	1316	5895	4863	1336	5456	4489	1575	5822	4818	1969	5609	4606	2054	5432	4341	2204	5041	4129	2290
	14	20	6089	4267	1316	6334	4863	1336	5895	4536	1593	6248	4818	1990	6035	4659	2076	5815	4341	2226	5396	4182	2333
	16	22	6089	4540	1337	6773	4863	1354	6272	4536	1612	6674	4818	2012	6461	4659	2119	6134	4341	2268	5822	4182	2354
	18	25	6530	4869	1357	7212	5284	1371	6648	4910	1630	7100	5241	2033	6816	5029	2119	6390	4712	2290	6106	4500	2375
	19	27	6750	5033	1378	7463	5565	1389	6899	5144	1649	7384	5506	2054	7100	5294	2140	7093	4976	2290	6390	4765	2375
	22	30	7483	4978	1378	8279	5518	1389	7651	5097	1649	8165	5453	2076	7881	5241	2161	7540	5082	2375	6603	4976	2504
	24	32	7997	4978	1398	8843	5518	1406	8153	5097	1667	8733	5453	2076	8378	5241	2183	5048	5188	2440	6745	5135	2589
1.2+1.2+2.5+2.5	12	18	6089	4267	1316	5895	4863	1336	5456	4489	1575	5822	4818	1969	5609	4606	2054	5432	4341	2204	5041	4129	2290
	14	20	6089	4267	1316	6334	4863	1336	5895	4536	1593	6248	4818	1990	6035	4659	2076	5815	4341	2226	5396	4182	2333
	16	22	6089	4540	1337	6773	4863	1354	6272	4536	1612	6674	4818	2012	6461	4659	2119	6134	4341	2268	5822	4182	2354
	18	25	6530	4869	1357	7212	5284	1371	6648	4910	1630	7100	5241	2033	6816	5029	2119	6390	4712	2290	6106	4500	2375
	19	27	6750	5033	1378	7463	5565	1389	6899	5144	1649	7384	5506	2054	7100	5294	2140	7093	4976	2290	6390	4765	2375
	22	30	7483	4978	1378	8279	5518	1389	7651	5097	1649	8165	5453	2076	7881	5241	2161	7540	5082	2375	6603	4976	2504
	24	32	7997	4978	1398	8843	5518	1406	8153	5097	1667	8733	5453	2076	8378	5241	2183	5048	5188	2440	6745	5135	2589
1.2+1.2+2.5+3.5	12	18	6089	4267	1316	5895	4863	1336	5456	4489	1575	5822	4818	1969	5609	4606	2054	5432	4341	2204	5041	4129	2290
	14	20	6089	4267	1316	6334	4863	1336	5895	4536	1593	6248	4818	1990	6035	4659	2076	5815	4341	2226	5396	4182	2333
	16	22	6089	4540	1337	6773	4863	1354	6272	4536	1612	6674	4818	2012	6461	4659	2119	6134	4341	2268	5822	4182	2354
	18	25	6530	4869	1357	7212	5284	1371	6648	4910	1630	7100	5241	2033	6816	5029	2119	6390	4712	2290	6106	4500	2375
	19	27	6750	5033	1378	7463	5565	1389	6899	5144	1649	7384	5506	2054	7100	5294	2140	7093	4976	2290	6390	4765	2375
	22	30	7483	4978	1378	8279	5518	1389	7651	5097	1649	8165	5453	2076	7881	5241	2161	7540	5082	2375	6603	4976	2504
	24	32	7997	4978	1398	8843	5518	1406	8153	5097	1667	8733	5453	2076	8378	5241	2183	5048	5188	2440	6745	5135	2589

EWB : Evaporator Wet Bulb temperature (°C)
EDB : Evaporator Dry Bulb temperature (°C)
(°CDB) : Outdoor Unit Inlet Air Dry Temperature (°C)

TC : Total Capacity (W)
SHC : Sensible Heating
PI : Power Input

	INDOOR		OUTDOOR TEMPERATURE (°CDB)																				
	EWB	EDB	-10			21			27			32			35			40			43		
	°C	°C	TC	SHC	PI	TC	SHC	PI	TC	SHC	PI	TC	SHC	PI	TC	SHC	PI	TC	SHC	PI	TC	SHC	PI
1.2+1.2+2.5+5	12	18	6089	4267	1316	5895	4863	1336	5456	4489	1575	5822	4818	1969	5609	4606	2054	5432	4341	2204	5041	4129	2290
	14	20	6089	4267	1316	6334	4863	1336	5895	4536	1593	6248	4818	1990	6035	4659	2076	5815	4341	2226	5396	4182	2333
	16	22	6089	4540	1337	6773	4863	1354	6272	4536	1612	6674	4818	2012	6461	4659	2119	6134	4341	2268	5822	4182	2354
	18	25	6530	4869	1357	7212	5284	1371	6648	4910	1630	7100	5241	2033	6816	5029	2119	6390	4712	2290	6106	4500	2375
	19	27	6750	5033	1378	7463	5565	1389	6899	5144	1649	7384	5506	2054	7100	5294	2140	7093	4976	2290	6390	4765	2375
	22	30	7483	4978	1378	8279	5518	1389	7651	5097	1649	8165	5453	2076	7881	5241	2161	7540	5082	2375	6603	4976	2504
	24	32	7997	4978	1398	8843	5518	1406	8153	5097	1667	8733	5453	2076	8378	5241	2183	5048	5188	2440	6745	5135	2589
1.2+1.2+2.5+6	12	18	6089	4267	1316	5895	4863	1336	5456	4489	1575	5822	4818	1969	5609	4606	2054	5432	4341	2204	5041	4129	2290
	14	20	6089	4267	1316	6334	4863	1336	5895	4536	1593	6248	4818	1990	6035	4659	2076	5815	4341	2226	5396	4182	2333
	16	22	6089	4540	1337	6773	4863	1354	6272	4536	1612	6674	4818	2012	6461	4659	2119	6134	4341	2268	5822	4182	2354
	18	25	6530	4869	1357	7212	5284	1371	6648	4910	1630	7100	5241	2033	6816	5029	2119	6390	4712	2290	6106	4500	2375
	19	27	6750	5033	1378	7463	5565	1389	6899	5144	1649	7384	5506	2054	7100	5294	2140	7093	4976	2290	6390	4765	2375
	22	30	7483	4978	1378	8279	5518	1389	7651	5097	1649	8165	5453	2076	7881	5241	2161	7540	5082	2375	6603	4976	2504
	24	32	7997	4978	1398	8843	5518	1406	8153	5097	1667	8733	5453	2076	8378	5241	2183	5048	5188	2440	6745	5135	2589
1.2+1.2+3.5+3.5	12	18	6089	4267	1316	5895	4863	1336	5456	4489	1575	5822	4818	1969	5609	4606	2054	5432	4341	2204	5041	4129	2290
	14	20	6089	4267	1316	6334	4863	1336	5895	4536	1593	6248	4818	1990	6035	4659	2076	5815	4341	2226	5396	4182	2333
	16	22	6089	4540	1337	6773	4863	1354	6272	4536	1612	6674	4818	2012	6461	4659	2119	6134	4341	2268	5822	4182	2354
	18	25	6530	4869	1357	7212	5284	1371	6648	4910	1630	7100	5241	2033	6816	5029	2119	6390	4712	2290	6106	4500	2375
	19	27	6750	5033	1378	7463	5565	1389	6899	5144	1649	7384	5506	2054	7100	5294	2140	7093	4976	2290	6390	4765	2375
	22	30	7483	4978	1378	8279	5518	1389	7651	5097	1649	8165	5453	2076	7881	5241	2161	7540	5082	2375	6603	4976	2504
	24	32	7997	4978	1398	8843	5518	1406	8153	5097	1667	8733	5453	2076	8378	5241	2183	5048	5188	2440	6745	5135	2589
1.2+1.2+3.5+5	12	18	6089	4267	1316	5895	4863	1336	5456	4489	1575	5822	4818	1969	5609	4606	2054	5432	4341	2204	5041	4129	2290
	14	20	6089	4267	1316	6334	4863	1336	5895	4536	1593	6248	4818	1990	6035	4659	2076	5815	4341	2226	5396	4182	2333
	16	22	6089	4540	1337	6773	4863	1354	6272	4536	1612	6674	4818	2012	6461	4659	2119	6134	4341	2268	5822	4182	2354
	18	25	6530	4869	1357	7212	5284	1371	6648	4910	1630	7100	5241	2033	6816	5029	2119	6390	4712	2290	6106	4500	2375
	19	27	6750	5033	1378	7463	5565	1389	6899	5144	1649	7384	5506	2054	7100	5294	2140	7093	4976	2290	6390	4765	2375
	22	30	7483	4978	1378	8279	5518	1389	7651	5097	1649	8165	5453	2076	7881	5241	2161	7540	5082	2375	6603	4976	2504
	24	32	7997	4978	1398	8843	5518	1406	8153	5097	1667	8733	5453	2076	8378	5241	2183	4693	5188	2440	6745	5135	2589
1.2+1.8+1.8+1.8	12	18	5661	3966	1236	5480	4521	1255	5072	4173	1479	5412	4478	1849	5214	4281	1930	5049	4035	2070	4686	3839	2151
	14	20	5661	3966	1236	5888	4521	1255	5480	4217	1496	5808	4478	1869	5610	4331	1950	5405	4035	2090	5016	3888	2191
	16	22	5661	4221	1256	6296	4521	1271	5830	4217	1514	6204	4478	1889	6006	4331	1990	5702	4035	2131	5412	3888	2211
	18	25	6070	4526	1275	6705	4912	1288	6180	4564	1531	6600	4872	1910	6336	4675	1990	5940	4380	2151	5676	4183	2231
	19	27	6274	4678	1294	6938	5173	1304	6413	4782	1549	6864	5118	1930	6600	4921	2010	6593	4626	2151	5940	4429	2231
	22	30	6956	4628	1294	7696	5130	1304	7113	4738	1549	7590	5069	1950	7326	4872	2030	7009	4724	2231	6138	4626	2352
	24	32	7434	4628	1313	8220	5130	1321	7579	4738	1566	8118	5069	1950	7788	4872	2050	5048	4823	2291	6270	4774	2432
1.2+1.8+1.8+2.5	12	18	6089	4267	1316	5895	4863	1336	5456	4489	1575	5822	4818	1969	5609	4606	2054	5432	4341	2204	5041	4129	2290
	14	20	6089	4267	1316	6334	4863	1336	5895	4536	1593	6248	4818	1990	6035	4659	2076	5815	4341	2226	5396	4182	2333
	16	22	6089	4540	1337	6773	4863	1354	6272	4536	1612	6674	4818	2012	6461	4659	2119	6134	4341	2268	5822	4182	2354
	18	25	6530	4869	1357	7212	5284	1371	6648	4910	1630	7100	5241	2033	6816	5029	2119	6390	4712	2290	6106	4500	2375
	19	27	6750	5033	1378	7463	5565	1389	6899	5144	1649	7384	5506	2054	7100	5294	2140	7093	4976	2290	6390	4765	2375
	22	30	7483	4978	1378	8279	5518	1389	7651	5097	1649	8165	5453	2076	7881	5241	2161	7540	5082	2375	6603	4976	2504
	24	32	7997	4978	1398	8843	5518	1406	8153	5097	1667	8733	5453	2076	8378	5241	2183	5048	5188	2440	6745	5135	2589
1.2+1.8+1.8+3.5	12	18	6089	4267	1316	5895	4863	1336	5456	4489	1575	5822	4818	1969	5609	4606	2054	5432	4341	2204	5041	4129	2290
	14	20	6089	4267	1316	6334	4863	1336	5895	4536	1593	6248	4818	1990	6035	4659	2076	5815	4341	2226	5396	4182	2333
	16	22	6089	4540	1337	6773	4863	1354	6272	4536	1612	6674	4818	2012	6461	4659	2119	6134	4341	2268	5822	4182	2354
	18	25	6530	4869	1357	7212	5284	1371	6648	4910	1630	7100	5241	2033	6816	5029	2119	6390	4712	2290	6106	4500	2375
	19	27	6750	5033	1378	7463	5565	1389	6899	5144	1649	7384	5506	2054	7100	5294	2140	7093	4976	2290	6390	4765	2375
	22	30	7483	4978	1378	8279	5518	1389	7651	5097	1649	8165	5453	2076	7881	5241	2161	7540	5082	2375	6603	4976	2504
	24	32	7997	4978	1398	8843	5518	1406	8153	5097	1667	8733	5453	2076	8378	5241	2183	5048	5188	2440	6745	5135	2589

EWB : Evaporator Wet Bulb temperature (°C)
EDB : Evaporator Dry Bulb temperature (°C)
(°CDB) : Outdoor Unit Inlet Air Dry Temperature (°C)

TC : Total Capacity (W)
SHC : Sensible Heating
PI : Power Input

	INDOOR		OUTDOOR TEMPERATURE (°CDB)																				
	EWB	EDB	-10			21			27			32			35			40			43		
	°C	°C	TC	SHC	PI	TC	SHC	PI	TC	SHC	PI	TC	SHC	PI	TC	SHC	PI	TC	SHC	PI	TC	SHC	PI
1.2+1.8+1.8+5	12	18	6089	4267	1316	5895	4863	1336	5456	4489	1575	5822	4818	1969	5609	4606	2054	5432	4341	2204	5041	4129	2290
	14	20	6089	4267	1316	6334	4863	1336	5895	4536	1593	6248	4818	1990	6035	4659	2076	5815	4341	2226	5396	4182	2333
	16	22	6089	4540	1337	6773	4863	1354	6272	4536	1612	6674	4818	2012	6461	4659	2119	6134	4341	2268	5822	4182	2354
	18	25	6530	4869	1357	7212	5284	1371	6648	4910	1630	7100	5241	2033	6816	5029	2119	6390	4712	2290	6106	4500	2375
	19	27	6750	5033	1378	7463	5565	1389	6899	5144	1649	7384	5506	2054	7100	5294	2140	7093	4976	2290	6390	4765	2375
	22	30	7483	4978	1378	8279	5518	1389	7651	5097	1649	8165	5453	2076	7881	5241	2161	7540	5082	2375	6603	4976	2504
	24	32	7997	4978	1398	8843	5518	1406	8153	5097	1667	8733	5453	2076	8378	5241	2183	5048	5188	2440	6745	5135	2589
1.2+1.8+1.8+6	12	18	6089	4267	1316	5895	4863	1336	5456	4489	1575	5822	4818	1969	5609	4606	2054	5432	4341	2204	5041	4129	2290
	14	20	6089	4267	1316	6334	4863	1336	5895	4536	1593	6248	4818	1990	6035	4659	2076	5815	4341	2226	5396	4182	2333
	16	22	6089	4540	1337	6773	4863	1354	6272	4536	1612	6674	4818	2012	6461	4659	2119	6134	4341	2268	5822	4182	2354
	18	25	6530	4869	1357	7212	5284	1371	6648	4910	1630	7100	5241	2033	6816	5029	2119	6390	4712	2290	6106	4500	2375
	19	27	6750	5033	1378	7463	5565	1389	6899	5144	1649	7384	5506	2054	7100	5294	2140	7093	4976	2290	6390	4765	2375
	22	30	7483	4978	1378	8279	5518	1389	7651	5097	1649	8165	5453	2076	7881	5241	2161	7540	5082	2375	6603	4976	2504
	24	32	7997	4978	1398	8843	5518	1406	8153	5097	1667	8733	5453	2076	8378	5241	2183	5048	5188	2440	6745	5135	2589
1.2+1.8+2.5+2.5	12	18	6089	4267	1316	5895	4863	1336	5456	4489	1575	5822	4818	1969	5609	4606	2054	5432	4341	2204	5041	4129	2290
	14	20	6089	4267	1316	6334	4863	1336	5895	4536	1593	6248	4818	1990	6035	4659	2076	5815	4341	2226	5396	4182	2333
	16	22	6089	4540	1337	6773	4863	1354	6272	4536	1612	6674	4818	2012	6461	4659	2119	6134	4341	2268	5822	4182	2354
	18	25	6530	4869	1357	7212	5284	1371	6648	4910	1630	7100	5241	2033	6816	5029	2119	6390	4712	2290	6106	4500	2375
	19	27	6750	5033	1378	7463	5565	1389	6899	5144	1649	7384	5506	2054	7100	5294	2140	7093	4976	2290	6390	4765	2375
	22	30	7483	4978	1378	8279	5518	1389	7651	5097	1649	8165	5453	2076	7881	5241	2161	7540	5082	2375	6603	4976	2504
	24	32	7997	4978	1398	8843	5518	1406	8153	5097	1667	8733	5453	2076	8378	5241	2183	5048	5188	2440	6745	5135	2589
1.2+1.8+2.5+3.5	12	18	6089	4267	1316	5895	4863	1336	5456	4489	1575	5822	4818	1969	5609	4606	2054	5432	4341	2204	5041	4129	2290
	14	20	6089	4267	1316	6334	4863	1336	5895	4536	1593	6248	4818	1990	6035	4659	2076	5815	4341	2226	5396	4182	2333
	16	22	6089	4540	1337	6773	4863	1354	6272	4536	1612	6674	4818	2012	6461	4659	2119	6134	4341	2268	5822	4182	2354
	18	25	6530	4869	1357	7212	5284	1371	6648	4910	1630	7100	5241	2033	6816	5029	2119	6390	4712	2290	6106	4500	2375
	19	27	6750	5033	1378	7463	5565	1389	6899	5144	1649	7384	5506	2054	7100	5294	2140	7093	4976	2290	6390	4765	2375
	22	30	7483	4978	1378	8279	5518	1389	7651	5097	1649	8165	5453	2076	7881	5241	2161	7540	5082	2375	6603	4976	2504
	24	32	7997	4978	1398	8843	5518	1406	8153	5097	1667	8733	5453	2076	8378	5241	2183	5048	5188	2440	6745	5135	2589
1.2+1.8+2.5+5	12	18	6089	4267	1316	5895	4863	1336	5456	4489	1575	5822	4818	1969	5609	4606	2054	5432	4341	2204	5041	4129	2290
	14	20	6089	4267	1316	6334	4863	1336	5895	4536	1593	6248	4818	1990	6035	4659	2076	5815	4341	2226	5396	4182	2333
	16	22	6089	4540	1337	6773	4863	1354	6272	4536	1612	6674	4818	2012	6461	4659	2119	6134	4341	2268	5822	4182	2354
	18	25	6530	4869	1357	7212	5284	1371	6648	4910	1630	7100	5241	2033	6816	5029	2119	6390	4712	2290	6106	4500	2375
	19	27	6750	5033	1378	7463	5565	1389	6899	5144	1649	7384	5506	2054	7100	5294	2140	7093	4976	2290	6390	4765	2375
	22	30	7483	4978	1378	8279	5518	1389	7651	5097	1649	8165	5453	2076	7881	5241	2161	7540	5082	2375	6603	4976	2504
	24	32	7997	4978	1398	8843	5518	1406	8153	5097	1667	8733	5453	2076	8378	5241	2183	5048	5188	2440	6745	5135	2589
1.2+1.8+3.5+3.5	12	18	6089	4267	1316	5895	4863	1336	5456	4489	1575	5822	4818	1969	5609	4606	2054	5432	4341	2204	5041	4129	2290
	14	20	6089	4267	1316	6334	4863	1336	5895	4536	1593	6248	4818	1990	6035	4659	2076	5815	4341	2226	5396	4182	2333
	16	22	6089	4540	1337	6773	4863	1354	6272	4536	1612	6674	4818	2012	6461	4659	2119	6134	4341	2268	5822	4182	2354
	18	25	6530	4869	1357	7212	5284	1371	6648	4910	1630	7100	5241	2033	6816	5029	2119	6390	4712	2290	6106	4500	2375
	19	27	6750	5033	1378	7463	5565	1389	6899	5144	1649	7384	5506	2054	7100	5294	2140	7093	4976	2290	6390	4765	2375
	22	30	7483	4978	1378	8279	5518	1389	7651	5097	1649	8165	5453	2076	7881	5241	2161	7540	5082	2375	6603	4976	2504
	24	32	7997	4978	1398	8843	5518	1406	8153	5097	1667	8733	5453	2076	8378	5241	2183	5048	5188	2440	6745	5135	2589
1.2+2.5+2.5+2.5	12	18	6089	4267	1316	5895	4863	1336	5456	4489	1575	5822	4818	1969	5609	4606	2054	5432	4341	2204	5041	4129	2290
	14	20	6089	4267	1316	6334	4863	1336	5895	4536	1593	6248	4818	1990	6035	4659	2076	5815	4341	2226	5396	4182	2333
	16	22	6089	4540	1337	6773	4863	1354	6272	4536	1612	6674	4818	2012	6461	4659	2119	6134	4341	2268	5822	4182	2354
	18	25	6530	4869	1357	7212	5284	1371	6648	4910	1630	7100	5241	2033	6816	5029	2119	6390	4712	2290	6106	4500	2375
	19	27	6750	5033	1378	7463	5565	1389	6899	5144	1649	7384	5506	2054	7100	5294	2140	7093	4976	2290	6390	4765	2375
	22	30	7483	4978	1378	8279	5518	1389	7651	5097	1649	8165	5453	2076	7881	5241	2161	7540	5082	2375	6603	4976	2504
	24	32	7997	4978	1398	8843	5518	1406	8153	5097	1667	8733	5453	2076	8378	5241	2183	5048	5188	2440	6745	5135	2589

EWB : Evaporator Wet Bulb temperature (°C)
EDB : Evaporator Dry Bulb temperature (°C)
(°CDB) : Outdoor Unit Inlet Air Dry Temperature (°C)

TC : Total Capacity (W)
SHC : Sensible Heating
PI : Power Input

	INDOOR		OUTDOOR TEMPERATURE (°CDB)																				
	EWB	EDB	-10			21			27			32			35			40			43		
	°C	°C	TC	SHC	PI	TC	SHC	PI	TC	SHC	PI	TC	SHC	PI	TC	SHC	PI	TC	SHC	PI	TC	SHC	PI
1.2+2.5+2.5+3.5	12	18	6089	4267	1316	5895	4863	1336	5456	4489	1575	5822	4818	1969	5609	4606	2054	5432	4341	2204	5041	4129	2290
	14	20	6089	4267	1316	6334	4863	1336	5895	4536	1593	6248	4818	1990	6035	4659	2076	5815	4341	2226	5396	4182	2333
	16	22	6089	4540	1337	6773	4863	1354	6272	4536	1612	6674	4818	2012	6461	4659	2119	6134	4341	2268	5822	4182	2354
	18	25	6530	4869	1357	7212	5284	1371	6648	4910	1630	7100	5241	2033	6816	5029	2119	6390	4712	2290	6106	4500	2375
	19	27	6750	5033	1378	7463	5565	1389	6899	5144	1649	7384	5506	2054	7100	5294	2140	7093	4976	2290	6390	4765	2375
	22	30	7483	4978	1378	8279	5518	1389	7651	5097	1649	8165	5453	2076	7881	5241	2161	7540	5082	2375	6603	4976	2504
	24	32	7997	4978	1398	8843	5518	1406	8153	5097	1667	8733	5453	2076	8378	5241	2183	5048	5188	2440	6745	5135	2589
1.2+2.5+3.5+3.5	12	18	6089	4267	1316	5895	4863	1336	5456	4489	1575	5822	4818	1969	5609	4606	2054	5432	4341	2204	5041	4129	2290
	14	20	6089	4267	1316	6334	4863	1336	5895	4536	1593	6248	4818	1990	6035	4659	2076	5815	4341	2226	5396	4182	2333
	16	22	6089	4540	1337	6773	4863	1354	6272	4536	1612	6674	4818	2012	6461	4659	2119	6134	4341	2268	5822	4182	2354
	18	25	6530	4869	1357	7212	5284	1371	6648	4910	1630	7100	5241	2033	6816	5029	2119	6390	4712	2290	6106	4500	2375
	19	27	6750	5033	1378	7463	5565	1389	6899	5144	1649	7384	5506	2054	7100	5294	2140	7093	4976	2290	6390	4765	2375
	22	30	7483	4978	1378	8279	5518	1389	7651	5097	1649	8165	5453	2076	7881	5241	2161	7540	5082	2375	6603	4976	2504
	24	32	7997	4978	1398	8843	5518	1406	8153	5097	1667	8733	5453	2076	8378	5241	2183	5048	5188	2440	6745	5135	2589
1.8+1.8+1.8+1.8	12	18	6089	4267	1316	5895	4863	1336	5456	4489	1575	5822	4818	1969	5609	4606	2054	5432	4341	2204	5041	4129	2290
	14	20	6089	4267	1316	6334	4863	1336	5895	4536	1593	6248	4818	1990	6035	4659	2076	5815	4341	2226	5396	4182	2333
	16	22	6089	4540	1337	6773	4863	1354	6272	4536	1612	6674	4818	2012	6461	4659	2119	6134	4341	2268	5822	4182	2354
	18	25	6530	4869	1357	7212	5284	1371	6648	4910	1630	7100	5241	2033	6816	5029	2119	6390	4712	2290	6106	4500	2375
	19	27	6750	5033	1378	7463	5565	1389	6899	5144	1649	7384	5506	2054	7100	5294	2140	7093	4976	2290	6390	4765	2375
	22	30	7483	4978	1378	8279	5518	1389	7651	5097	1649	8165	5453	2076	7881	5241	2161	7540	5082	2375	6603	4976	2504
	24	32	7997	4978	1398	8843	5518	1406	8153	5097	1667	8733	5453	2076	8378	5241	2183	5048	5188	2440	6745	5135	2589
1.8+1.8+1.8+2.5	12	18	6089	4267	1316	5895	4863	1336	5456	4489	1575	5822	4818	1969	5609	4606	2054	5432	4341	2204	5041	4129	2290
	14	20	6089	4267	1316	6334	4863	1336	5895	4536	1593	6248	4818	1990	6035	4659	2076	5815	4341	2226	5396	4182	2333
	16	22	6089	4540	1337	6773	4863	1354	6272	4536	1612	6674	4818	2012	6461	4659	2119	6134	4341	2268	5822	4182	2354
	18	25	6530	4869	1357	7212	5284	1371	6648	4910	1630	7100	5241	2033	6816	5029	2119	6390	4712	2290	6106	4500	2375
	19	27	6750	5033	1378	7463	5565	1389	6899	5144	1649	7384	5506	2054	7100	5294	2140	7093	4976	2290	6390	4765	2375
	22	30	7483	4978	1378	8279	5518	1389	7651	5097	1649	8165	5453	2076	7881	5241	2161	7540	5082	2375	6603	4976	2504
	24	32	7997	4978	1398	8843	5518	1406	8153	5097	1667	8733	5453	2076	8378	5241	2183	5048	5188	2440	6745	5135	2589
1.8+1.8+1.8+3.5	12	18	6089	4267	1316	5895	4863	1336	5456	4489	1575	5822	4818	1969	5609	4606	2054	5432	4341	2204	5041	4129	2290
	14	20	6089	4267	1316	6334	4863	1336	5895	4536	1593	6248	4818	1990	6035	4659	2076	5815	4341	2226	5396	4182	2333
	16	22	6089	4540	1337	6773	4863	1354	6272	4536	1612	6674	4818	2012	6461	4659	2119	6134	4341	2268	5822	4182	2354
	18	25	6530	4869	1357	7212	5284	1371	6648	4910	1630	7100	5241	2033	6816	5029	2119	6390	4712	2290	6106	4500	2375
	19	27	6750	5033	1378	7463	5565	1389	6899	5144	1649	7384	5506	2054	7100	5294	2140	7093	4976	2290	6390	4765	2375
	22	30	7483	4978	1378	8279	5518	1389	7651	5097	1649	8165	5453	2076	7881	5241	2161	7540	5082	2375	6603	4976	2504
	24	32	7997	4978	1398	8843	5518	1406	8153	5097	1667	8733	5453	2076	8378	5241	2183	5048	5188	2440	6745	5135	2589
1.8+1.8+1.8+5	12	18	6089	4267	1316	5895	4863	1336	5456	4489	1575	5822	4818	1969	5609	4606	2054	5432	4341	2204	5041	4129	2290
	14	20	6089	4267	1316	6334	4863	1336	5895	4536	1593	6248	4818	1990	6035	4659	2076	5815	4341	2226	5396	4182	2333
	16	22	6089	4540	1337	6773	4863	1354	6272	4536	1612	6674	4818	2012	6461	4659	2119	6134	4341	2268	5822	4182	2354
	18	25	6530	4869	1357	7212	5284	1371	6648	4910	1630	7100	5241	2033	6816	5029	2119	6390	4712	2290	6106	4500	2375
	19	27	6750	5033	1378	7463	5565	1389	6899	5144	1649	7384	5506	2054	7100	5294	2140	7093	4976	2290	6390	4765	2375
	22	30	7483	4978	1378	8279	5518	1389	7651	5097	1649	8165	5453	2076	7881	5241	2161	7540	5082	2375	6603	4976	2504
	24	32	7997	4978	1398	8843	5518	1406	8153	5097	1667	8733	5453	2076	8378	5241	2183	5048	5188	2440	6745	5135	2589
1.8+1.8+2.5+2.5	12	18	6089	4267	1316	5895	4863	1336	5456	4489	1575	5822	4818	1969	5609	4606	2054	5432	4341	2204	5041	4129	2290
	14	20	6089	4267	1316	6334	4863	1336	5895	4536	1593	6248	4818	1990	6035	4659	2076	5815	4341	2226	5396	4182	2333
	16	22	6089	4540	1337	6773	4863	1354	6272	4536	1612	6674	4818	2012	6461	4659	2119	6134	4341	2268	5822	4182	2354
	18	25	6530	4869	1357	7212	5284	1371	6648	4910	1630	7100	5241	2033	6816	5029	2119	6390	4712	2290	6106	4500	2375
	19	27	6750	5033	1378	7463	5565	1389	6899	5144	1649	7384	5506	2054	7100	5294	2140	7093	4976	2290	6390	4765	2375
	22	30	7483	4978	1378	8279	5518	1389	7651	5097	1649	8165	5453	2076	7881	5241	2161	7540	5082	2375	6603	4976	2504
	24	32	7997	4978	1398	8843	5518	1406	8153	5097	1667	8733	5453	2076	8378	5241	2183	5048	5188	2440	6745	5135	2589

EWB : Evaporator Wet Bulb temperature (°C)
EDB : Evaporator Dry Bulb temperature (°C)
(°CDB) : Outdoor Unit Inlet Air Dry Temperature (°C)

TC : Total Capacity (W)
SHC : Sensible Heating
PI : Power Input

	INDOOR		OUTDOOR TEMPERATURE (°CDB)																				
	EWB	EDB	-10			21			27			32			35			40			43		
	°C	°C	TC	SHC	PI	TC	SHC	PI	TC	SHC	PI	TC	SHC	PI	TC	SHC	PI	TC	SHC	PI	TC	SHC	PI
1.8+1.8+2.5+3.5	12	18	6089	4267	1316	5895	4863	1336	5456	4489	1575	5822	4818	1969	5609	4606	2054	5432	4341	2204	5041	4129	2290
	14	20	6089	4267	1316	6334	4863	1336	5895	4536	1593	6248	4818	1990	6035	4659	2076	5815	4341	2226	5396	4182	2333
	16	22	6089	4540	1337	6773	4863	1354	6272	4536	1612	6674	4818	2012	6461	4659	2119	6134	4341	2268	5822	4182	2354
	18	25	6530	4869	1357	7212	5284	1371	6648	4910	1630	7100	5241	2033	6816	5029	2119	6390	4712	2290	6106	4500	2375
	19	27	6750	5033	1378	7463	5565	1389	6899	5144	1649	7384	5506	2054	7100	5294	2140	7093	4976	2290	6390	4765	2375
	22	30	7483	4978	1378	8279	5518	1389	7651	5097	1649	8165	5453	2076	7881	5241	2161	7540	5082	2375	6603	4976	2504
	24	32	7997	4978	1398	8843	5518	1406	8153	5097	1667	8733	5453	2076	8378	5241	2183	5048	5188	2440	6745	5135	2589
1.8+1.8+3.5+3.5	12	18	6089	4267	1316	5895	4863	1336	5456	4489	1575	5822	4818	1969	5609	4606	2054	5432	4341	2204	5041	4129	2290
	14	20	6089	4267	1316	6334	4863	1336	5895	4536	1593	6248	4818	1990	6035	4659	2076	5815	4341	2226	5396	4182	2333
	16	22	6089	4540	1337	6773	4863	1354	6272	4536	1612	6674	4818	2012	6461	4659	2119	6134	4341	2268	5822	4182	2354
	18	25	6530	4869	1357	7212	5284	1371	6648	4910	1630	7100	5241	2033	6816	5029	2119	6390	4712	2290	6106	4500	2375
	19	27	6750	5033	1378	7463	5565	1389	6899	5144	1649	7384	5506	2054	7100	5294	2140	7093	4976	2290	6390	4765	2375
	22	30	7483	4978	1378	8279	5518	1389	7651	5097	1649	8165	5453	2076	7881	5241	2161	7540	5082	2375	6603	4976	2504
	24	32	7997	4978	1398	8843	5518	1406	8153	5097	1667	8733	5453	2076	8378	5241	2183	5048	5188	2440	6745	5135	2589
1.8+2.5+2.5+2.5	12	18	6089	4267	1316	5895	4863	1336	5456	4489	1575	5822	4818	1969	5609	4606	2054	5432	4341	2204	5041	4129	2290
	14	20	6089	4267	1316	6334	4863	1336	5895	4536	1593	6248	4818	1990	6035	4659	2076	5815	4341	2226	5396	4182	2333
	16	22	6089	4540	1337	6773	4863	1354	6272	4536	1612	6674	4818	2012	6461	4659	2119	6134	4341	2268	5822	4182	2354
	18	25	6530	4869	1357	7212	5284	1371	6648	4910	1630	7100	5241	2033	6816	5029	2119	6390	4712	2290	6106	4500	2375
	19	27	6750	5033	1378	7463	5565	1389	6899	5144	1649	7384	5506	2054	7100	5294	2140	7093	4976	2290	6390	4765	2375
	22	30	7483	4978	1378	8279	5518	1389	7651	5097	1649	8165	5453	2076	7881	5241	2161	7540	5082	2375	6603	4976	2504
	24	32	7997	4978	1398	8843	5518	1406	8153	5097	1667	8733	5453	2076	8378	5241	2183	5048	5188	2440	6745	5135	2589
1.8+2.5+2.5+3.5	12	18	6089	4267	1316	5895	4863	1336	5456	4489	1575	5822	4818	1969	5609	4606	2054	5432	4341	2204	5041	4129	2290
	14	20	6089	4267	1316	6334	4863	1336	5895	4536	1593	6248	4818	1990	6035	4659	2076	5815	4341	2226	5396	4182	2333
	16	22	6089	4540	1337	6773	4863	1354	6272	4536	1612	6674	4818	2012	6461	4659	2119	6134	4341	2268	5822	4182	2354
	18	25	6530	4869	1357	7212	5284	1371	6648	4910	1630	7100	5241	2033	6816	5029	2119	6390	4712	2290	6106	4500	2375
	19	27	6750	5033	1378	7463	5565	1389	6899	5144	1649	7384	5506	2054	7100	5294	2140	7093	4976	2290	6390	4765	2375
	22	30	7483	4978	1378	8279	5518	1389	7651	5097	1649	8165	5453	2076	7881	5241	2161	7540	5082	2375	6603	4976	2504
	24	32	7997	4978	1398	8843	5518	1406	8153	5097	1667	8733	5453	2076	8378	5241	2183	5048	5188	2440	6745	5135	2589
2.5+2.5+2.5+2.5	12	18	6089	4267	1316	5895	4863	1336	5456	4489	1575	5822	4818	1969	5609	4606	2054	5432	4341	2204	5041	4129	2290
	14	20	6089	4267	1316	6334	4863	1336	5895	4536	1593	6248	4818	1990	6035	4659	2076	5815	4341	2226	5396	4182	2333
	16	22	6089	4540	1337	6773	4863	1354	6272	4536	1612	6674	4818	2012	6461	4659	2119	6134	4341	2268	5822	4182	2354
	18	25	6530	4869	1357	7212	5284	1371	6648	4910	1630	7100	5241	2033	6816	5029	2119	6390	4712	2290	6106	4500	2375
	19	27	6750	5033	1378	7463	5565	1389	6899	5144	1649	7384	5506	2054	7100	5294	2140	7093	4976	2290	6390	4765	2375
	22	30	7483	4978	1378	8279	5518	1389	7651	5097	1649	8165	5453	2076	7881	5241	2161	7540	5082	2375	6603	4976	2504
	24	32	7997	4978	1398	8843	5518	1406	8153	5097	1667	8733	5453	2076	8378	5241	2183	5048	5188	2440	6745	5135	2589
2.5+2.5+2.5+3.5	12	18	6089	4267	1316	5895	4863	1336	5456	4489	1575	5822	4818	1969	5609	4606	2054	5432	4341	2204	5041	4129	2290
	14	20	6089	4267	1316	6334	4863	1336	5895	4536	1593	6248	4818	1990	6035	4659	2076	5815	4341	2226	5396	4182	2333
	16	22	6089	4540	1337	6773	4863	1354	6272	4536	1612	6674	4818	2012	6461	4659	2119	6134	4341	2268	5822	4182	2354
	18	25	6530	4869	1357	7212	5284	1371	6648	4910	1630	7100	5241	2033	6816	5029	2119	6390	4712	2290	6106	4500	2375
	19	27	6750	5033	1378	7463	5565	1389	6899	5144	1649	7384	5506	2054	7100	5294	2140	7093	4976	2290	6390	4765	2375
	22	30	7483	4978	1378	8279	5518	1389	7651	5097	1649	8165	5453	2076	7881	5241	2161	7540	5082	2375	6603	4976	2504
	24	32	7997	4978	1398	8843	5518	1406	8153	5097	1667	8733	5453	2076	8378	5241	2183	7384	5188	2440	6745	5135	2589

EWB : Evaporator Wet Bulb temperature (°C)
EDB : Evaporator Dry Bulb temperature (°C)
(°CDB) : Outdoor Unit Inlet Air Dry Temperature (°C)

TC : Total Capacity (W)
SHC : Sensible Heating
PI : Power Input

HEATING [50Hz, 230V]

	INDOOR	OUTDOOR TEMPERATURE (°CDB)																							
	EDB	-15			-10			-7			-5			0			7			10			15		
	°C	TC	SHC	PI	TC	SHC	PI	TC	SHC	PI	TC	SHC	PI	TC	SHC	PI	TC	SHC	PI	TC	SHC	PI	TC	SHC	PI
RAM-70NP4A	16	3060	0	1561	4845	0	1604	5523	0	1672	5976	0	1718	7276	0	1922	8594	0	1948	9376	0	2000	10821	0	2099
	18	3018	0	1583	4803	0	1625	5471	0	1707	5916	0	1762	7200	0	1971	8551	0	2047	9342	0	2089	10778	0	2199
	20	2975	0	1604	4760	0	1646	5423	0	1734	5865	0	1794	7140	0	2005	8500	0	2110	9138	0	2184	10710	0	2300
	22	2933	0	1625	4718	0	1667	5355	0	1771	5780	0	1840	7064	0	2053	8449	0	2194	9240	0	2264	10659	0	2395
	24	2890	0	1646	4675	0	1688	5307	0	1806	5729	0	1884	7004	0	2102	8398	0	2279	9189	0	2351	10506	0	2492
1.2	16	648	0	414	1026	0	426	1170	0	444	1265	0	456	1541	0	510	1820	0	517	1985	0	531	2291	0	557
	18	639	0	420	1017	0	431	1158	0	453	1253	0	468	1525	0	523	1811	0	543	1978	0	554	2282	0	584
	20	630	0	426	1008	0	437	1148	0	460	1242	0	476	1512	0	532	1800	0	560	1935	0	580	2268	0	610
	22	621	0	431	999	0	442	1134	0	470	1224	0	488	1496	0	545	1789	0	582	1957	0	601	2257	0	636
	24	612	0	437	990	0	448	1124	0	479	1213	0	500	1483	0	558	1778	0	605	1946	0	624	2225	0	661
1.8	16	900	0	629	1425	0	646	1625	0	674	1758	0	692	2140	0	774	2528	0	785	2758	0	806	3183	0	846
	18	888	0	638	1413	0	655	1609	0	688	1740	0	710	2118	0	794	2515	0	825	2748	0	842	3170	0	886
	20	875	0	646	1400	0	663	1595	0	699	1725	0	723	2100	0	808	2500	0	850	2688	0	880	3150	0	927
	22	863	0	655	1388	0	672	1575	0	713	1700	0	741	2078	0	827	2485	0	884	2718	0	912	3135	0	965
	24	850	0	663	1375	0	680	1561	0	727	1685	0	759	2060	0	847	2470	0	918	2703	0	947	3090	0	1004
2.5	16	1224	0	836	1938	0	859	2209	0	895	2390	0	920	2910	0	1029	3437	0	1043	3750	0	1071	4328	0	1124
	18	1207	0	848	1921	0	870	2188	0	914	2366	0	944	2880	0	1055	3420	0	1096	3737	0	1119	4311	0	1177
	20	1190	0	859	1904	0	881	2169	0	929	2346	0	961	2856	0	1074	3400	0	1130	3655	0	1170	4284	0	1232
	22	1173	0	870	1887	0	893	2142	0	948	2312	0	985	2825	0	1099	3380	0	1175	3696	0	1212	4264	0	1283
	24	1156	0	881	1870	0	904	2123	0	967	2292	0	1009	2802	0	1125	3359	0	1220	3675	0	1259	4202	0	1335
3.5	16	1548	0	1125	2451	0	1155	2794	0	1204	3023	0	1237	3681	0	1385	4347	0	1403	4743	0	1441	5474	0	1512
	18	1527	0	1140	2430	0	1170	2767	0	1230	2993	0	1269	3642	0	1420	4326	0	1474	4726	0	1505	5452	0	1584
	20	1505	0	1155	2408	0	1186	2743	0	1249	2967	0	1292	3612	0	1444	4300	0	1520	4623	0	1573	5418	0	1657
	22	1484	0	1170	2387	0	1201	2709	0	1276	2924	0	1325	3573	0	1479	4274	0	1581	4674	0	1631	5392	0	1725
	24	1462	0	1186	2365	0	1216	2685	0	1301	2898	0	1357	3543	0	1514	4248	0	1642	4648	0	1693	5315	0	1795
5	16	2340	0	1776	3705	0	1824	4224	0	1902	4570	0	1954	5564	0	2186	6572	0	2215	7170	0	2275	8275	0	2388
	18	2308	0	1800	3673	0	1848	4183	0	1942	4524	0	2004	5506	0	2242	6539	0	2328	7144	0	2376	8242	0	2501
	20	2275	0	1824	3640	0	1872	4147	0	1973	4485	0	2040	5460	0	2280	6500	0	2400	6988	0	2484	8190	0	2616
	22	2243	0	1848	3608	0	1896	4095	0	2014	4420	0	2093	5402	0	2335	6461	0	2496	7066	0	2575	8151	0	2724
	24	2210	0	1872	3575	0	1920	4059	0	2054	4381	0	2143	5356	0	2390	6422	0	2592	7027	0	2674	8034	0	2834
6	16	2628	0	1917	4161	0	1968	4744	0	2052	5132	0	2108	6249	0	2359	7380	0	2391	8052	0	2455	9293	0	2577
	18	2592	0	1943	4125	0	1994	4698	0	2095	5081	0	2163	6183	0	2419	7344	0	2512	8023	0	2564	9256	0	2699
	20	2555	0	1968	4088	0	2020	4657	0	2129	5037	0	2202	6132	0	2461	7300	0	2590	7848	0	2681	9198	0	2823
	22	2519	0	1994	4052	0	2046	4599	0	2174	4964	0	2258	6066	0	2520	7256	0	2694	7935	0	2779	9154	0	2940
	24	2482	0	2020	4015	0	2072	4558	0	2217	4920	0	2313	6015	0	2580	7212	0	2797	7891	0	2885	9023	0	3059
1.2+1.2	16	1296	0	703	2052	0	722	2339	0	753	2531	0	773	3082	0	865	3640	0	877	3971	0	901	4583	0	945
	18	1278	0	713	2034	0	732	2317	0	769	2506	0	793	3049	0	887	3622	0	922	3956	0	941	4565	0	990
	20	1260	0	722	2016	0	741	2297	0	781	2484	0	808	3024	0	903	3600	0	950	3870	0	983	4536	0	1036
	22	1242	0	732	1998	0	751	2268	0	797	2448	0	828	2992	0	924	3578	0	988	3913	0	1019	4514	0	1078
	24	1224	0	741	1980	0	760	2248	0	813	2426	0	848	2966	0	946	3557	0	1026	3892	0	1058	4450	0	1122

EWB : Evaporator Wet Bulb temperature (°C)

EDB : Evaporator Dry Bulb temperature (°C)

(°CDB) : Outdoor Unit Inlet Air Dry Temperature (°C)

TC : Total Capacity (W)

SHC : Sensible Heating Capacity (W)

PI : Power Input

	INDOOR	OUTDOOR TEMPERATURE (°CDB)																							
	EDB	-15			-10			-7			-5			0			7			10			15		
	°C	TC	SHC	PI	TC	SHC	PI	TC	SHC	PI	TC	SHC	PI	TC	SHC	PI	TC	SHC	PI	TC	SHC	PI	TC	SHC	PI
1.2+1.8	16	1548	0	814	2451	0	836	2794	0	872	3023	0	895	3681	0	1002	4347	0	1015	4743	0	1043	5474	0	1095
	18	1527	0	825	2430	0	847	2767	0	890	2993	0	919	3642	0	1027	4326	0	1067	4726	0	1089	5452	0	1146
	20	1505	0	836	2408	0	858	2743	0	904	2967	0	935	3612	0	1045	4300	0	1100	4623	0	1139	5418	0	1199
	22	1484	0	847	2387	0	869	2709	0	923	2924	0	959	3573	0	1070	4274	0	1144	4674	0	1180	5392	0	1249
	24	1462	0	858	2365	0	880	2685	0	941	2898	0	982	3543	0	1096	4248	0	1188	4648	0	1225	5315	0	1299
1.2+2.5	16	1872	0	1073	2964	0	1102	3379	0	1149	3656	0	1180	4451	0	1321	5257	0	1338	5736	0	1375	6620	0	1443
	18	1846	0	1088	2938	0	1117	3347	0	1173	3619	0	1211	4404	0	1354	5231	0	1407	5715	0	1436	6594	0	1511
	20	1820	0	1102	2912	0	1131	3318	0	1192	3588	0	1233	4368	0	1378	5200	0	1450	5590	0	1501	6552	0	1581
	22	1794	0	1117	2886	0	1146	3276	0	1217	3536	0	1264	4321	0	1411	5169	0	1508	5652	0	1556	6521	0	1646
	24	1768	0	1131	2860	0	1160	3247	0	1241	3505	0	1295	4285	0	1444	5138	0	1566	5621	0	1615	6427	0	1712
1.2+3.5	16	2196	0	1228	3477	0	1262	3964	0	1315	4288	0	1351	5222	0	1512	6167	0	1532	6728	0	1574	7765	0	1652
	18	2166	0	1245	3447	0	1278	3926	0	1343	4246	0	1386	5167	0	1550	6137	0	1610	6704	0	1643	7735	0	1730
	20	2135	0	1262	3416	0	1295	3892	0	1365	4209	0	1411	5124	0	1577	6100	0	1660	6558	0	1718	7686	0	1809
	22	2105	0	1278	3386	0	1311	3843	0	1393	4148	0	1448	5069	0	1615	6063	0	1726	6631	0	1781	7649	0	1884
	24	2074	0	1295	3355	0	1328	3809	0	1421	4111	0	1482	5026	0	1653	6027	0	1793	6594	0	1849	7540	0	1960
1.2+5	16	2988	0	1828	4731	0	1877	5393	0	1957	5835	0	2011	7105	0	2250	8391	0	2280	9155	0	2342	10566	0	2458
	18	2947	0	1853	4690	0	1902	5342	0	1998	5777	0	2062	7030	0	2307	8350	0	2396	9122	0	2445	10524	0	2574
	20	2905	0	1877	4648	0	1927	5295	0	2030	5727	0	2100	6972	0	2347	8300	0	2470	8923	0	2556	10458	0	2692
	22	2864	0	1902	4607	0	1951	5229	0	2073	5644	0	2154	6897	0	2403	8250	0	2569	9022	0	2650	10408	0	2803
	24	2822	0	1927	4565	0	1976	5183	0	2114	5594	0	2206	6839	0	2460	8200	0	2668	8972	0	2752	10259	0	2917
1.2+6	16	3096	0	1828	4902	0	1877	5588	0	1957	6046	0	2011	7362	0	2250	8695	0	2280	9486	0	2342	10948	0	2458
	18	3053	0	1853	4859	0	1902	5535	0	1998	5986	0	2062	7284	0	2307	8652	0	2396	9451	0	2445	10905	0	2574
	20	3010	0	1877	4816	0	1927	5487	0	2030	5934	0	2100	7224	0	2347	8600	0	2470	9245	0	2556	10836	0	2692
	22	2967	0	1902	4773	0	1951	5418	0	2073	5848	0	2154	7147	0	2403	8548	0	2569	9348	0	2650	10784	0	2803
	24	2924	0	1927	4730	0	1976	5370	0	2114	5796	0	2206	7086	0	2460	8497	0	2668	9297	0	2752	10630	0	2917
1.8+1.8	16	1800	0	1021	2850	0	1049	3249	0	1094	3515	0	1123	4280	0	1257	5055	0	1274	5515	0	1308	6365	0	1373
	18	1775	0	1035	2825	0	1063	3218	0	1116	3480	0	1152	4235	0	1289	5030	0	1339	5495	0	1366	6340	0	1438
	20	1750	0	1049	2800	0	1076	3190	0	1134	3450	0	1173	4200	0	1311	5000	0	1380	5375	0	1428	6300	0	1504
	22	1725	0	1063	2775	0	1090	3150	0	1158	3400	0	1203	4155	0	1343	4970	0	1435	5435	0	1481	6270	0	1566
	24	1700	0	1076	2750	0	1104	3122	0	1181	3370	0	1232	4120	0	1374	4940	0	1490	5405	0	1537	6180	0	1630
1.8+2.5	16	2124	0	1243	3363	0	1277	3834	0	1331	4148	0	1368	5050	0	1530	5965	0	1551	6508	0	1593	7511	0	1672
	18	2095	0	1260	3334	0	1294	3797	0	1359	4106	0	1403	4997	0	1569	5935	0	1630	6484	0	1663	7481	0	1751
	20	2065	0	1277	3304	0	1310	3764	0	1381	4071	0	1428	4956	0	1596	5900	0	1680	6343	0	1739	7434	0	1831
	22	2036	0	1294	3275	0	1327	3717	0	1410	4012	0	1465	4903	0	1635	5865	0	1747	6413	0	1803	7399	0	1907
	24	2006	0	1310	3245	0	1344	3684	0	1438	3977	0	1500	4862	0	1673	5829	0	1814	6378	0	1872	7292	0	1984
1.8+3.5	16	2448	0	1502	3876	0	1543	4419	0	1609	4780	0	1652	5821	0	1849	6875	0	1874	7500	0	1924	8656	0	2020
	18	2414	0	1523	3842	0	1563	4376	0	1642	4733	0	1695	5760	0	1896	6841	0	1969	7473	0	2010	8622	0	2115
	20	2380	0	1543	3808	0	1583	4338	0	1669	4692	0	1726	5712	0	1929	6800	0	2030	7310	0	2101	8568	0	2213
	22	2346	0	1563	3774	0	1604	4284	0	1704	4624	0	1770	5651	0	1975	6759	0	2111	7392	0	2178	8527	0	2304
	24	2312	0	1583	3740	0	1624	4246	0	1737	4583	0	1813	5603	0	2022	6718	0	2192	7351	0	2261	8405	0	2397

EWB : Evaporator Wet Bulb temperature (°C)

EDB : Evaporator Dry Bulb temperature (°C)

(°CDB) : Outdoor Unit Inlet Air Dry Temperature (°C)

TC : Total Capacity (W)

SHC : Sensible Heating Capacity (W)

PI : Power Input

	INDOOR	OUTDOOR TEMPERATURE (°CDB)																							
	EDB	-15			-10			-7			-5			0			7			10			15		
	°C	TC	SHC	PI	TC	SHC	PI	TC	SHC	PI	TC	SHC	PI	TC	SHC	PI	TC	SHC	PI	TC	SHC	PI	TC	SHC	PI
1.8+5	16	3096	0	1828	4902	0	1877	5588	0	1957	6046	0	2011	7362	0	2250	8695	0	2280	9486	0	2342	10948	0	2458
	18	3053	0	1853	4859	0	1902	5535	0	1998	5986	0	2062	7284	0	2307	8652	0	2396	9451	0	2445	10905	0	2574
	20	3010	0	1877	4816	0	1927	5487	0	2030	5934	0	2100	7224	0	2347	8600	0	2470	9245	0	2556	10836	0	2692
	22	2967	0	1902	4773	0	1951	5418	0	2073	5848	0	2154	7147	0	2403	8548	0	2569	9348	0	2650	10784	0	2803
	24	2924	0	1927	4730	0	1976	5370	0	2114	5796	0	2206	7086	0	2460	8497	0	2668	9297	0	2752	10630	0	2917
1.8+6	16	3096	0	1813	4902	0	1862	5588	0	1941	6046	0	1994	7362	0	2232	8695	0	2261	9486	0	2323	10948	0	2438
	18	3053	0	1838	4859	0	1887	5535	0	1982	5986	0	2046	7284	0	2288	8652	0	2377	9451	0	2426	10905	0	2553
	20	3010	0	1862	4816	0	1911	5487	0	2014	5934	0	2083	7224	0	2328	8600	0	2450	9245	0	2536	10836	0	2671
	22	2967	0	1887	4773	0	1936	5418	0	2056	5848	0	2136	7147	0	2384	8548	0	2548	9348	0	2629	10784	0	2781
	24	2924	0	1911	4730	0	1960	5370	0	2097	5796	0	2188	7086	0	2440	8497	0	2646	9297	0	2729	10630	0	2893
2.5+2.5	16	2592	0	1532	4104	0	1573	4679	0	1640	5062	0	1685	6163	0	1886	7279	0	1911	7942	0	1962	9166	0	2060
	18	2556	0	1553	4068	0	1594	4634	0	1675	5011	0	1728	6098	0	1933	7243	0	2008	7913	0	2049	9130	0	2157
	20	2520	0	1573	4032	0	1615	4594	0	1702	4968	0	1760	6048	0	1967	7200	0	2070	7740	0	2142	9072	0	2256
	22	2484	0	1594	3996	0	1635	4536	0	1737	4896	0	1805	5983	0	2014	7157	0	2153	7826	0	2221	9029	0	2349
	24	2448	0	1615	3960	0	1656	4496	0	1772	4853	0	1849	5933	0	2062	7114	0	2236	7783	0	2306	8899	0	2445
2.5+3.5	16	2844	0	1791	4503	0	1839	5133	0	1918	5554	0	1970	6762	0	2205	7987	0	2234	8714	0	2294	10057	0	2408
	18	2805	0	1815	4464	0	1863	5084	0	1958	5498	0	2021	6691	0	2260	7947	0	2347	8682	0	2396	10017	0	2522
	20	2765	0	1839	4424	0	1888	5040	0	1989	5451	0	2057	6636	0	2299	7900	0	2420	8493	0	2505	9954	0	2638
	22	2726	0	1863	4385	0	1912	4977	0	2031	5372	0	2110	6565	0	2355	7853	0	2517	8587	0	2597	9907	0	2747
	24	2686	0	1888	4345	0	1936	4933	0	2071	5325	0	2161	6510	0	2410	7805	0	2614	8540	0	2696	9764	0	2858
2.5+5	16	3096	0	1828	4902	0	1877	5588	0	1957	6046	0	2011	7362	0	2250	8695	0	2280	9486	0	2342	10948	0	2458
	18	3053	0	1853	4859	0	1902	5535	0	1998	5986	0	2062	7284	0	2307	8652	0	2396	9451	0	2445	10905	0	2574
	20	3010	0	1877	4816	0	1927	5487	0	2030	5934	0	2100	7224	0	2347	8600	0	2470	9245	0	2556	10836	0	2692
	22	2967	0	1902	4773	0	1951	5418	0	2073	5848	0	2154	7147	0	2403	8548	0	2569	9348	0	2650	10784	0	2803
	24	2924	0	1927	4730	0	1976	5370	0	2114	5796	0	2206	7086	0	2460	8497	0	2668	9297	0	2752	10630	0	2917
2.5+6	16	3096	0	1813	4902	0	1862	5588	0	1941	6046	0	1994	7362	0	2232	8695	0	2261	9486	0	2323	10948	0	2438
	18	3053	0	1838	4859	0	1887	5535	0	1982	5986	0	2046	7284	0	2288	8652	0	2377	9451	0	2426	10905	0	2553
	20	3010	0	1862	4816	0	1911	5487	0	2014	5934	0	2083	7224	0	2328	8600	0	2450	9245	0	2536	10836	0	2671
	22	2967	0	1887	4773	0	1936	5418	0	2056	5848	0	2136	7147	0	2384	8548	0	2548	9348	0	2629	10784	0	2781
	24	2924	0	1911	4730	0	1960	5370	0	2097	5796	0	2188	7086	0	2440	8497	0	2646	9297	0	2729	10630	0	2893
3.5+3.5	16	3096	0	1976	4902	0	2029	5588	0	2116	6046	0	2173	7362	0	2432	8695	0	2464	9486	0	2531	10948	0	2657
	18	3053	0	2003	4859	0	2056	5535	0	2160	5986	0	2229	7284	0	2494	8652	0	2590	9451	0	2643	10905	0	2782
	20	3010	0	2029	4816	0	2083	5487	0	2195	5934	0	2270	7224	0	2537	8600	0	2670	9245	0	2763	10836	0	2910
	22	2967	0	2056	4773	0	2109	5418	0	2241	5848	0	2328	7147	0	2598	8548	0	2777	9348	0	2865	10784	0	3030
	24	2924	0	2083	4730	0	2136	5370	0	2285	5796	0	2384	7086	0	2659	8497	0	2884	9297	0	2974	10630	0	3153
3.5+5	16	3096	0	1828	4902	0	1877	5588	0	1957	6046	0	2011	7362	0	2250	8695	0	2280	9486	0	2342	10948	0	2458
	18	3053	0	1853	4859	0	1902	5535	0	1998	5986	0	2062	7284	0	2307	8652	0	2396	9451	0	2445	10905	0	2574
	20	3010	0	1877	4816	0	1927	5487	0	2030	5934	0	2100	7224	0	2347	8600	0	2470	9245	0	2556	10836	0	2692
	22	2967	0	1902	4773	0	1951	5418	0	2073	5848	0	2154	7147	0	2403	8548	0	2569	9348	0	2650	10784	0	2803
	24	2924	0	1927	4730	0	1976	5370	0	2114	5796	0	2206	7086	0	2460	8497	0	2668	9297	0	2752	10630	0	2917

EWB : Evaporator Wet Bulb temperature (°C)

EDB : Evaporator Dry Bulb temperature (°C)

(°CDB) : Outdoor Unit Inlet Air Dry Temperature (°C)

TC : Total Capacity (W)

SHC : Sensible Heating Capacity (W)

PI : Power Input

	INDOOR	OUTDOOR TEMPERATURE (°CDB)																							
	EDB	-15			-10			-7			-5			0			7			10			15		
	°C	TC	SHC	PI	TC	SHC	PI	TC	SHC	PI	TC	SHC	PI	TC	SHC	PI	TC	SHC	PI	TC	SHC	PI	TC	SHC	PI
3.5+6	16	3096	0	1813	4902	0	1862	5588	0	1941	6046	0	1994	7362	0	2232	8695	0	2261	9486	0	2323	10948	0	2438
	18	3053	0	1838	4859	0	1887	5535	0	1982	5986	0	2046	7284	0	2288	8652	0	2377	9451	0	2426	10905	0	2553
	20	3010	0	1862	4816	0	1911	5487	0	2014	5934	0	2083	7224	0	2328	8600	0	2450	9245	0	2536	10836	0	2671
	22	2967	0	1887	4773	0	1936	5418	0	2056	5848	0	2136	7147	0	2384	8548	0	2548	9348	0	2629	10784	0	2781
	24	2924	0	1911	4730	0	1960	5370	0	2097	5796	0	2188	7086	0	2440	8497	0	2646	9297	0	2729	10630	0	2893
5+5	16	3096	0	1828	4902	0	1877	5588	0	1957	6046	0	2011	7362	0	2250	8695	0	2280	9486	0	2342	10948	0	2458
	18	3053	0	1853	4859	0	1902	5535	0	1998	5986	0	2062	7284	0	2307	8652	0	2396	9451	0	2445	10905	0	2574
	20	3010	0	1877	4816	0	1927	5487	0	2030	5934	0	2100	7224	0	2347	8600	0	2470	9245	0	2556	10836	0	2692
	22	2967	0	1902	4773	0	1951	5418	0	2073	5848	0	2154	7147	0	2403	8548	0	2569	9348	0	2650	10784	0	2803
	24	2924	0	1927	4730	0	1976	5370	0	2114	5796	0	2206	7086	0	2460	8497	0	2668	9297	0	2752	10630	0	2917
5+6	16	3096	0	1813	4902	0	1862	5588	0	1941	6046	0	1994	7362	0	2232	8695	0	2261	9486	0	2323	10948	0	2438
	18	3053	0	1838	4859	0	1887	5535	0	1982	5986	0	2046	7284	0	2288	8652	0	2377	9451	0	2426	10905	0	2553
	20	3010	0	1862	4816	0	1911	5487	0	2014	5934	0	2083	7224	0	2328	8600	0	2450	9245	0	2536	10836	0	2671
	22	2967	0	1887	4773	0	1936	5418	0	2056	5848	0	2136	7147	0	2384	8548	0	2548	9348	0	2629	10784	0	2781
	24	2924	0	1911	4730	0	1960	5370	0	2097	5796	0	2188	7086	0	2440	8497	0	2646	9297	0	2729	10630	0	2893
1.2+1.2+1.2	16	1944	0	1103	3078	0	1132	3509	0	1181	3796	0	1213	4622	0	1357	5459	0	1375	5956	0	1413	6874	0	1483
	18	1917	0	1118	3051	0	1147	3475	0	1205	3758	0	1244	4574	0	1392	5432	0	1445	5935	0	1475	6847	0	1553
	20	1890	0	1132	3024	0	1162	3445	0	1225	3726	0	1267	4536	0	1416	5400	0	1490	5805	0	1542	6804	0	1624
	22	1863	0	1147	2997	0	1177	3402	0	1250	3672	0	1299	4487	0	1450	5368	0	1550	5870	0	1599	6772	0	1691
	24	1836	0	1162	2970	0	1192	3372	0	1275	3640	0	1331	4450	0	1484	5335	0	1609	5837	0	1660	6674	0	1760
1.2+1.2+1.8	16	2196	0	1243	3477	0	1277	3964	0	1331	4288	0	1368	5222	0	1530	6167	0	1551	6728	0	1593	7765	0	1672
	18	2166	0	1260	3447	0	1294	3926	0	1359	4246	0	1403	5167	0	1569	6137	0	1630	6704	0	1663	7735	0	1751
	20	2135	0	1277	3416	0	1310	3892	0	1381	4209	0	1428	5124	0	1596	6100	0	1680	6558	0	1739	7686	0	1831
	22	2105	0	1294	3386	0	1327	3843	0	1410	4148	0	1465	5069	0	1635	6063	0	1747	6631	0	1803	7649	0	1907
	24	2074	0	1310	3355	0	1344	3809	0	1438	4111	0	1500	5026	0	1673	6027	0	1814	6594	0	1872	7540	0	1984
1.2+1.2+2.5	16	2520	0	1413	3990	0	1452	4549	0	1513	4921	0	1555	5992	0	1740	7077	0	1763	7721	0	1811	8911	0	1900
	18	2485	0	1433	3955	0	1471	4505	0	1545	4872	0	1595	5929	0	1784	7042	0	1853	7693	0	1891	8876	0	1990
	20	2450	0	1452	3920	0	1490	4466	0	1570	4830	0	1624	5880	0	1815	7000	0	1910	7525	0	1977	8820	0	2082
	22	2415	0	1471	3885	0	1509	4410	0	1603	4760	0	1666	5817	0	1858	6958	0	1986	7609	0	2049	8778	0	2168
	24	2380	0	1490	3850	0	1528	4371	0	1635	4718	0	1706	5768	0	1902	6916	0	2063	7567	0	2128	8652	0	2256
1.2+1.2+3.5	16	2844	0	1576	4503	0	1619	5133	0	1688	5554	0	1734	6762	0	1940	7987	0	1966	8714	0	2019	10057	0	2119
	18	2805	0	1598	4464	0	1640	5084	0	1723	5498	0	1779	6691	0	1989	7947	0	2066	8682	0	2109	10017	0	2219
	20	2765	0	1619	4424	0	1661	5040	0	1751	5451	0	1811	6636	0	2024	7900	0	2130	8493	0	2205	9954	0	2322
	22	2726	0	1640	4385	0	1683	4977	0	1787	5372	0	1857	6565	0	2072	7853	0	2215	8587	0	2285	9907	0	2418
	24	2686	0	1661	4345	0	1704	4933	0	1823	5325	0	1902	6510	0	2121	7805	0	2300	8540	0	2373	9764	0	2516
1.2+1.2+5	16	3096	0	1672	4902	0	1718	5588	0	1791	6046	0	1840	7362	0	2059	8695	0	2086	9486	0	2142	10948	0	2249
	18	3053	0	1695	4859	0	1740	5535	0	1828	5986	0	1887	7284	0	2111	8652	0	2192	9451	0	2237	10905	0	2355
	20	3010	0	1718	4816	0	1763	5487	0	1858	5934	0	1921	7224	0	2147	8600	0	2260	9245	0	2339	10836	0	2463
	22	2967	0	1740	4773	0	1785	5418	0	1897	5848	0	1971	7147	0	2199	8548	0	2350	9348	0	2425	10784	0	2565
	24	2924	0	1763	4730	0	1808	5370	0	1934	5796	0	2018	7086	0	2251	8497	0	2441	9297	0	2518	10630	0	2669

EWB : Evaporator Wet Bulb temperature (°C)

EDB : Evaporator Dry Bulb temperature (°C)

(°CDB) : Outdoor Unit Inlet Air Dry Temperature (°C)

TC : Total Capacity (W)

SHC : Sensible Heating Capacity (W)

PI : Power Input

	INDOOR	OUTDOOR TEMPERATURE (°CDB)																							
	EDB	-15			-10			-7			-5			0			7			10			15		
	°C	TC	SHC	PI	TC	SHC	PI	TC	SHC	PI	TC	SHC	PI	TC	SHC	PI	TC	SHC	PI	TC	SHC	PI	TC	SHC	PI
1.2+1.2+6	16	3096	0	1672	4902	0	1718	5588	0	1791	6046	0	1840	7362	0	2059	8695	0	2086	9486	0	2142	10948	0	2249
	18	3053	0	1695	4859	0	1740	5535	0	1828	5986	0	1887	7284	0	2111	8652	0	2192	9451	0	2237	10905	0	2355
	20	3010	0	1718	4816	0	1763	5487	0	1858	5934	0	1921	7224	0	2147	8600	0	2260	9245	0	2339	10836	0	2463
	22	2967	0	1740	4773	0	1785	5418	0	1897	5848	0	1971	7147	0	2199	8548	0	2350	9348	0	2425	10784	0	2565
	24	2924	0	1763	4730	0	1808	5370	0	1934	5796	0	2018	7086	0	2251	8497	0	2441	9297	0	2518	10630	0	2669
1.2+1.8+1.8	16	2448	0	1376	3876	0	1414	4419	0	1474	4780	0	1514	5821	0	1694	6875	0	1717	7500	0	1763	8656	0	1851
	18	2414	0	1395	3842	0	1432	4376	0	1505	4733	0	1553	5760	0	1737	6841	0	1804	7473	0	1841	8622	0	1938
	20	2380	0	1414	3808	0	1451	4338	0	1529	4692	0	1581	5712	0	1767	6800	0	1860	7310	0	1925	8568	0	2027
	22	2346	0	1432	3774	0	1469	4284	0	1561	4624	0	1622	5651	0	1810	6759	0	1934	7392	0	1996	8527	0	2111
	24	2312	0	1451	3740	0	1488	4246	0	1592	4583	0	1661	5603	0	1853	6718	0	2009	7351	0	2072	8405	0	2197
1.2+1.8+2.5	16	2772	0	1561	4389	0	1604	5003	0	1672	5413	0	1718	6591	0	1922	7785	0	1948	8493	0	2000	9802	0	2099
	18	2734	0	1583	4351	0	1625	4956	0	1707	5359	0	1762	6522	0	1971	7746	0	2047	8462	0	2089	9764	0	2199
	20	2695	0	1604	4312	0	1646	4913	0	1734	5313	0	1794	6468	0	2005	7700	0	2110	8278	0	2184	9702	0	2300
	22	2657	0	1625	4274	0	1667	4851	0	1771	5236	0	1840	6399	0	2053	7654	0	2194	8370	0	2264	9656	0	2395
	24	2618	0	1646	4235	0	1688	4808	0	1806	5190	0	1884	6345	0	2102	7608	0	2279	8324	0	2351	9517	0	2492
1.2+1.8+3.5	16	3096	0	1695	4902	0	1740	5588	0	1815	6046	0	1864	7362	0	2086	8695	0	2114	9486	0	2171	10948	0	2279
	18	3053	0	1718	4859	0	1763	5535	0	1853	5986	0	1912	7284	0	2139	8652	0	2221	9451	0	2267	10905	0	2386
	20	3010	0	1740	4816	0	1786	5487	0	1882	5934	0	1947	7224	0	2176	8600	0	2290	9245	0	2370	10836	0	2496
	22	2967	0	1763	4773	0	1809	5418	0	1922	5848	0	1997	7147	0	2228	8548	0	2382	9348	0	2457	10784	0	2599
	24	2924	0	1786	4730	0	1832	5370	0	1960	5796	0	2045	7086	0	2281	8497	0	2473	9297	0	2551	10630	0	2704
1.2+1.8+5	16	3096	0	1672	4902	0	1718	5588	0	1791	6046	0	1840	7362	0	2059	8695	0	2086	9486	0	2142	10948	0	2249
	18	3053	0	1695	4859	0	1740	5535	0	1828	5986	0	1887	7284	0	2111	8652	0	2192	9451	0	2237	10905	0	2355
	20	3010	0	1718	4816	0	1763	5487	0	1858	5934	0	1921	7224	0	2147	8600	0	2260	9245	0	2339	10836	0	2463
	22	2967	0	1740	4773	0	1785	5418	0	1897	5848	0	1971	7147	0	2199	8548	0	2350	9348	0	2425	10784	0	2565
	24	2924	0	1763	4730	0	1808	5370	0	1934	5796	0	2018	7086	0	2251	8497	0	2441	9297	0	2518	10630	0	2669
1.2+1.8+6	16	3096	0	1672	4902	0	1718	5588	0	1791	6046	0	1840	7362	0	2059	8695	0	2086	9486	0	2142	10948	0	2249
	18	3053	0	1695	4859	0	1740	5535	0	1828	5986	0	1887	7284	0	2111	8652	0	2192	9451	0	2237	10905	0	2355
	20	3010	0	1718	4816	0	1763	5487	0	1858	5934	0	1921	7224	0	2147	8600	0	2260	9245	0	2339	10836	0	2463
	22	2967	0	1740	4773	0	1785	5418	0	1897	5848	0	1971	7147	0	2199	8548	0	2350	9348	0	2425	10784	0	2565
	24	2924	0	1763	4730	0	1808	5370	0	1934	5796	0	2018	7086	0	2251	8497	0	2441	9297	0	2518	10630	0	2669
1.2+2.5+2.5	16	3096	0	1695	4902	0	1740	5588	0	1815	6046	0	1864	7362	0	2086	8695	0	2114	9486	0	2171	10948	0	2279
	18	3053	0	1718	4859	0	1763	5535	0	1853	5986	0	1912	7284	0	2139	8652	0	2221	9451	0	2267	10905	0	2386
	20	3010	0	1740	4816	0	1786	5487	0	1882	5934	0	1947	7224	0	2176	8600	0	2290	9245	0	2370	10836	0	2496
	22	2967	0	1763	4773	0	1809	5418	0	1922	5848	0	1997	7147	0	2228	8548	0	2382	9348	0	2457	10784	0	2599
	24	2924	0	1786	4730	0	1832	5370	0	1960	5796	0	2045	7086	0	2281	8497	0	2473	9297	0	2551	10630	0	2704
1.2+2.5+3.5	16	3096	0	1695	4902	0	1740	5588	0	1815	6046	0	1864	7362	0	2086	8695	0	2114	9486	0	2171	10948	0	2279
	18	3053	0	1718	4859	0	1763	5535	0	1853	5986	0	1912	7284	0	2139	8652	0	2221	9451	0	2267	10905	0	2386
	20	3010	0	1740	4816	0	1786	5487	0	1882	5934	0	1947	7224	0	2176	8600	0	2290	9245	0	2370	10836	0	2496
	22	2967	0	1763	4773	0	1809	5418	0	1922	5848	0	1997	7147	0	2228	8548	0	2382	9348	0	2457	10784	0	2599
	24	2924	0	1786	4730	0	1832	5370	0	1960	5796	0	2045	7086	0	2281	8497	0	2473	9297	0	2551	10630	0	2704

EWB : Evaporator Wet Bulb temperature (°C)

EDB : Evaporator Dry Bulb temperature (°C)

(°CDB) : Outdoor Unit Inlet Air Dry Temperature (°C)

TC : Total Capacity (W)

SHC : Sensible Heating Capacity (W)

PI : Power Input

	INDOOR	OUTDOOR TEMPERATURE (°CDB)																							
	EDB	-15			-10			-7			-5			0			7			10			15		
	°C	TC	SHC	PI	TC	SHC	PI	TC	SHC	PI	TC	SHC	PI	TC	SHC	PI	TC	SHC	PI	TC	SHC	PI	TC	SHC	PI
1.2+2.5+5	16	3096	0	1672	4902	0	1718	5588	0	1791	6046	0	1840	7362	0	2059	8695	0	2086	9486	0	2142	10948	0	2249
	18	3053	0	1695	4859	0	1740	5535	0	1828	5986	0	1887	7284	0	2111	8652	0	2192	9451	0	2237	10905	0	2355
	20	3010	0	1718	4816	0	1763	5487	0	1858	5934	0	1921	7224	0	2147	8600	0	2260	9245	0	2339	10836	0	2463
	22	2967	0	1740	4773	0	1785	5418	0	1897	5848	0	1971	7147	0	2199	8548	0	2350	9348	0	2425	10784	0	2565
	24	2924	0	1763	4730	0	1808	5370	0	1934	5796	0	2018	7086	0	2251	8497	0	2441	9297	0	2518	10630	0	2669
1.2+2.5+6	16	3096	0	1672	4902	0	1718	5588	0	1791	6046	0	1840	7362	0	2059	8695	0	2086	9486	0	2142	10948	0	2249
	18	3053	0	1695	4859	0	1740	5535	0	1828	5986	0	1887	7284	0	2111	8652	0	2192	9451	0	2237	10905	0	2355
	20	3010	0	1718	4816	0	1763	5487	0	1858	5934	0	1921	7224	0	2147	8600	0	2260	9245	0	2339	10836	0	2463
	22	2967	0	1740	4773	0	1785	5418	0	1897	5848	0	1971	7147	0	2199	8548	0	2350	9348	0	2425	10784	0	2565
	24	2924	0	1763	4730	0	1808	5370	0	1934	5796	0	2018	7086	0	2251	8497	0	2441	9297	0	2518	10630	0	2669
1.2+3.5+3.5	16	3096	0	1672	4902	0	1718	5588	0	1791	6046	0	1840	7362	0	2059	8695	0	2086	9486	0	2142	10948	0	2249
	18	3053	0	1695	4859	0	1740	5535	0	1828	5986	0	1887	7284	0	2111	8652	0	2192	9451	0	2237	10905	0	2355
	20	3010	0	1718	4816	0	1763	5487	0	1858	5934	0	1921	7224	0	2147	8600	0	2260	9245	0	2339	10836	0	2463
	22	2967	0	1740	4773	0	1785	5418	0	1897	5848	0	1971	7147	0	2199	8548	0	2350	9348	0	2425	10784	0	2565
	24	2924	0	1763	4730	0	1808	5370	0	1934	5796	0	2018	7086	0	2251	8497	0	2441	9297	0	2518	10630	0	2669
1.2+3.5+5	16	3096	0	1672	4902	0	1718	5588	0	1791	6046	0	1840	7362	0	2059	8695	0	2086	9486	0	2142	10948	0	2249
	18	3053	0	1695	4859	0	1740	5535	0	1828	5986	0	1887	7284	0	2111	8652	0	2192	9451	0	2237	10905	0	2355
	20	3010	0	1718	4816	0	1763	5487	0	1858	5934	0	1921	7224	0	2147	8600	0	2260	9245	0	2339	10836	0	2463
	22	2967	0	1740	4773	0	1785	5418	0	1897	5848	0	1971	7147	0	2199	8548	0	2350	9348	0	2425	10784	0	2565
	24	2924	0	1763	4730	0	1808	5370	0	1934	5796	0	2018	7086	0	2251	8497	0	2441	9297	0	2518	10630	0	2669
1.2+3.5+6	16	3096	0	1672	4902	0	1718	5588	0	1791	6046	0	1840	7362	0	2059	8695	0	2086	9486	0	2142	10948	0	2249
	18	3053	0	1695	4859	0	1740	5535	0	1828	5986	0	1887	7284	0	2111	8652	0	2192	9451	0	2237	10905	0	2355
	20	3010	0	1718	4816	0	1763	5487	0	1858	5934	0	1921	7224	0	2147	8600	0	2260	9245	0	2339	10836	0	2463
	22	2967	0	1740	4773	0	1785	5418	0	1897	5848	0	1971	7147	0	2199	8548	0	2350	9348	0	2425	10784	0	2565
	24	2924	0	1763	4730	0	1808	5370	0	1934	5796	0	2018	7086	0	2251	8497	0	2441	9297	0	2518	10630	0	2669
1.2+5+5	16	3096	0	1672	4902	0	1718	5588	0	1791	6046	0	1840	7362	0	2059	8695	0	2086	9486	0	2142	10948	0	2249
	18	3053	0	1695	4859	0	1740	5535	0	1828	5986	0	1887	7284	0	2111	8652	0	2192	9451	0	2237	10905	0	2355
	20	3010	0	1718	4816	0	1763	5487	0	1858	5934	0	1921	7224	0	2147	8600	0	2260	9245	0	2339	10836	0	2463
	22	2967	0	1740	4773	0	1785	5418	0	1897	5848	0	1971	7147	0	2199	8548	0	2350	9348	0	2425	10784	0	2565
	24	2924	0	1763	4730	0	1808	5370	0	1934	5796	0	2018	7086	0	2251	8497	0	2441	9297	0	2518	10630	0	2669
1.8+1.8+1.8	16	3096	0	1695	4902	0	1740	5588	0	1815	6046	0	1864	7362	0	2086	8695	0	2114	9486	0	2171	10948	0	2279
	18	3053	0	1718	4859	0	1763	5535	0	1853	5986	0	1912	7284	0	2139	8652	0	2221	9451	0	2267	10905	0	2386
	20	3010	0	1740	4816	0	1786	5487	0	1882	5934	0	1947	7224	0	2176	8600	0	2290	9245	0	2370	10836	0	2496
	22	2967	0	1763	4773	0	1809	5418	0	1922	5848	0	1997	7147	0	2228	8548	0	2382	9348	0	2457	10784	0	2599
	24	2924	0	1786	4730	0	1832	5370	0	1960	5796	0	2045	7086	0	2281	8497	0	2473	9297	0	2551	10630	0	2704
1.8+1.8+2.5	16	3096	0	1695	4902	0	1740	5588	0	1815	6046	0	1864	7362	0	2086	8695	0	2114	9486	0	2171	10948	0	2279
	18	3053	0	1718	4859	0	1763	5535	0	1853	5986	0	1912	7284	0	2139	8652	0	2221	9451	0	2267	10905	0	2386
	20	3010	0	1740	4816	0	1786	5487	0	1882	5934	0	1947	7224	0	2176	8600	0	2290	9245	0	2370	10836	0	2496
	22	2967	0	1763	4773	0	1809	5418	0	1922	5848	0	1997	7147	0	2228	8548	0	2382	9348	0	2457	10784	0	2599
	24	2924	0	1786	4730	0	1832	5370	0	1960	5796	0	2045	7086	0	2281	8497	0	2473	9297	0	2551	10630	0	2704

EWB : Evaporator Wet Bulb temperature (°C)

EDB : Evaporator Dry Bulb temperature (°C)

(°CDB) : Outdoor Unit Inlet Air Dry Temperature (°C)

TC : Total Capacity (W)

SHC : Sensible Heating Capacity (W)

PI : Power Input

	INDOOR	OUTDOOR TEMPERATURE (°CDB)																							
	EDB	-15			-10			-7			-5			0			7			10			15		
	°C	TC	SHC	PI	TC	SHC	PI	TC	SHC	PI	TC	SHC	PI	TC	SHC	PI	TC	SHC	PI	TC	SHC	PI	TC	SHC	PI
1.8+1.8+3.5	16	3096	0	1695	4902	0	1740	5588	0	1815	6046	0	1864	7362	0	2086	8695	0	2114	9486	0	2171	10948	0	2279
	18	3053	0	1718	4859	0	1763	5535	0	1853	5986	0	1912	7284	0	2139	8652	0	2221	9451	0	2267	10905	0	2386
	20	3010	0	1740	4816	0	1786	5487	0	1882	5934	0	1947	7224	0	2176	8600	0	2290	9245	0	2370	10836	0	2496
	22	2967	0	1763	4773	0	1809	5418	0	1922	5848	0	1997	7147	0	2228	8548	0	2382	9348	0	2457	10784	0	2599
	24	2924	0	1786	4730	0	1832	5370	0	1960	5796	0	2045	7086	0	2281	8497	0	2473	9297	0	2551	10630	0	2704
1.8+1.8+5	16	3096	0	1687	4902	0	1733	5588	0	1807	6046	0	1856	7362	0	2077	8695	0	2104	9486	0	2161	10948	0	2269
	18	3053	0	1710	4859	0	1756	5535	0	1845	5986	0	1904	7284	0	2130	8652	0	2212	9451	0	2257	10905	0	2376
	20	3010	0	1733	4816	0	1778	5487	0	1874	5934	0	1938	7224	0	2166	8600	0	2280	9245	0	2360	10836	0	2485
	22	2967	0	1756	4773	0	1801	5418	0	1913	5848	0	1988	7147	0	2218	8548	0	2371	9348	0	2446	10784	0	2588
	24	2924	0	1778	4730	0	1824	5370	0	1951	5796	0	2036	7086	0	2271	8497	0	2462	9297	0	2540	10630	0	2693
1.8+1.8+6	16	3096	0	1687	4902	0	1733	5588	0	1807	6046	0	1856	7362	0	2077	8695	0	2104	9486	0	2161	10948	0	2269
	18	3053	0	1710	4859	0	1756	5535	0	1845	5986	0	1904	7284	0	2130	8652	0	2212	9451	0	2257	10905	0	2376
	20	3010	0	1733	4816	0	1778	5487	0	1874	5934	0	1938	7224	0	2166	8600	0	2280	9245	0	2360	10836	0	2485
	22	2967	0	1756	4773	0	1801	5418	0	1913	5848	0	1988	7147	0	2218	8548	0	2371	9348	0	2446	10784	0	2588
	24	2924	0	1778	4730	0	1824	5370	0	1951	5796	0	2036	7086	0	2271	8497	0	2462	9297	0	2540	10630	0	2693
1.8+2.5+2.5	16	3096	0	1695	4902	0	1740	5588	0	1815	6046	0	1864	7362	0	2086	8695	0	2114	9486	0	2171	10948	0	2279
	18	3053	0	1718	4859	0	1763	5535	0	1853	5986	0	1912	7284	0	2139	8652	0	2221	9451	0	2267	10905	0	2386
	20	3010	0	1740	4816	0	1786	5487	0	1882	5934	0	1947	7224	0	2176	8600	0	2290	9245	0	2370	10836	0	2496
	22	2967	0	1763	4773	0	1809	5418	0	1922	5848	0	1997	7147	0	2228	8548	0	2382	9348	0	2457	10784	0	2599
	24	2924	0	1786	4730	0	1832	5370	0	1960	5796	0	2045	7086	0	2281	8497	0	2473	9297	0	2551	10630	0	2704
1.8+2.5+3.5	16	3096	0	1695	4902	0	1740	5588	0	1815	6046	0	1864	7362	0	2086	8695	0	2114	9486	0	2171	10948	0	2279
	18	3053	0	1718	4859	0	1763	5535	0	1853	5986	0	1912	7284	0	2139	8652	0	2221	9451	0	2267	10905	0	2386
	20	3010	0	1740	4816	0	1786	5487	0	1882	5934	0	1947	7224	0	2176	8600	0	2290	9245	0	2370	10836	0	2496
	22	2967	0	1763	4773	0	1809	5418	0	1922	5848	0	1997	7147	0	2228	8548	0	2382	9348	0	2457	10784	0	2599
	24	2924	0	1786	4730	0	1832	5370	0	1960	5796	0	2045	7086	0	2281	8497	0	2473	9297	0	2551	10630	0	2704
1.8+2.5+5	16	3096	0	1687	4902	0	1733	5588	0	1807	6046	0	1856	7362	0	2077	8695	0	2104	9486	0	2161	10948	0	2269
	18	3053	0	1710	4859	0	1756	5535	0	1845	5986	0	1904	7284	0	2130	8652	0	2212	9451	0	2257	10905	0	2376
	20	3010	0	1733	4816	0	1778	5487	0	1874	5934	0	1938	7224	0	2166	8600	0	2280	9245	0	2360	10836	0	2485
	22	2967	0	1756	4773	0	1801	5418	0	1913	5848	0	1988	7147	0	2218	8548	0	2371	9348	0	2446	10784	0	2588
	24	2924	0	1778	4730	0	1824	5370	0	1951	5796	0	2036	7086	0	2271	8497	0	2462	9297	0	2540	10630	0	2693
1.8+2.5+6	16	3096	0	1672	4902	0	1718	5588	0	1791	6046	0	1840	7362	0	2059	8695	0	2086	9486	0	2142	10948	0	2249
	18	3053	0	1695	4859	0	1740	5535	0	1828	5986	0	1887	7284	0	2111	8652	0	2192	9451	0	2237	10905	0	2355
	20	3010	0	1718	4816	0	1763	5487	0	1858	5934	0	1921	7224	0	2147	8600	0	2260	9245	0	2339	10836	0	2463
	22	2967	0	1740	4773	0	1785	5418	0	1897	5848	0	1971	7147	0	2199	8548	0	2350	9348	0	2425	10784	0	2565
	24	2924	0	1763	4730	0	1808	5370	0	1934	5796	0	2018	7086	0	2251	8497	0	2441	9297	0	2518	10630	0	2669
1.8+3.5+3.5	16	3096	0	1695	4902	0	1740	5588	0	1815	6046	0	1864	7362	0	2086	8695	0	2114	9486	0	2171	10948	0	2279
	18	3053	0	1718	4859	0	1763	5535	0	1853	5986	0	1912	7284	0	2139	8652	0	2221	9451	0	2267	10905	0	2386
	20	3010	0	1740	4816	0	1786	5487	0	1882	5934	0	1947	7224	0	2176	8600	0	2290	9245	0	2370	10836	0	2496
	22	2967	0	1763	4773	0	1809	5418	0	1922	5848	0	1997	7147	0	2228	8548	0	2382	9348	0	2457	10784	0	2599
	24	2924	0	1786	4730	0	1832	5370	0	1960	5796	0	2045	7086	0	2281	8497	0	2473	9297	0	2551	10630	0	2704

EWB : Evaporator Wet Bulb temperature (°C)
EDB : Evaporator Dry Bulb temperature (°C)
(°CDB) : Outdoor Unit Inlet Air Dry Temperature (°C)

TC : Total Capacity (W)
SHC : Sensible Heating Capacity (W)
PI : Power Input

	INDOOR	OUTDOOR TEMPERATURE (°CDB)																					
	EDB	-15			-10			-7			-5			0			7			10			15		
	°C	TC	SHC	PI	TC	SHC	PI	TC	SHC	PI	TC	SHC	PI	TC	SHC	PI	TC	SHC	PI	TC	SHC	PI	TC	SHC	PI
1.8+3.5+5	16	3096	0	1687	4902	0	1733	5588	0	1807	6046	0	1856	7362	0	2077	8695	0	2104	9486	0	2161	10948	0	2269
	18	3053	0	1710	4859	0	1756	5535	0	1845	5986	0	1904	7284	0	2130	8652	0	2212	9451	0	2257	10905	0	2376
	20	3010	0	1733	4816	0	1778	5487	0	1874	5934	0	1938	7224	0	2166	8600	0	2280	9245	0	2360	10836	0	2485
	22	2967	0	1756	4773	0	1801	5418	0	1913	5848	0	1988	7147	0	2218	8548	0	2371	9348	0	2446	10784	0	2588
	24	2924	0	1778	4730	0	1824	5370	0	1951	5796	0	2036	7086	0	2271	8497	0	2462	9297	0	2540	10630	0	2693
2.5+2.5+2.5	16	3096	0	1695	4902	0	1740	5588	0	1815	6046	0	1864	7362	0	2086	8695	0	2114	9486	0	2171	10948	0	2279
	18	3053	0	1718	4859	0	1763	5535	0	1853	5986	0	1912	7284	0	2139	8652	0	2221	9451	0	2267	10905	0	2386
	20	3010	0	1740	4816	0	1786	5487	0	1882	5934	0	1947	7224	0	2176	8600	0	2290	9245	0	2370	10836	0	2496
	22	2967	0	1763	4773	0	1809	5418	0	1922	5848	0	1997	7147	0	2228	8548	0	2382	9348	0	2457	10784	0	2599
	24	2924	0	1786	4730	0	1832	5370	0	1960	5796	0	2045	7086	0	2281	8497	0	2473	9297	0	2551	10630	0	2704
2.5+2.5+3.5	16	3096	0	1695	4902	0	1740	5588	0	1815	6046	0	1864	7362	0	2086	8695	0	2114	9486	0	2171	10948	0	2279
	18	3053	0	1718	4859	0	1763	5535	0	1853	5986	0	1912	7284	0	2139	8652	0	2221	9451	0	2267	10905	0	2386
	20	3010	0	1740	4816	0	1786	5487	0	1882	5934	0	1947	7224	0	2176	8600	0	2290	9245	0	2370	10836	0	2496
	22	2967	0	1763	4773	0	1809	5418	0	1922	5848	0	1997	7147	0	2228	8548	0	2382	9348	0	2457	10784	0	2599
	24	2924	0	1786	4730	0	1832	5370	0	1960	5796	0	2045	7086	0	2281	8497	0	2473	9297	0	2551	10630	0	2704
2.5+2.5+5	16	3096	0	1687	4902	0	1733	5588	0	1807	6046	0	1856	7362	0	2077	8695	0	2104	9486	0	2161	10948	0	2269
	18	3053	0	1710	4859	0	1756	5535	0	1845	5986	0	1904	7284	0	2130	8652	0	2212	9451	0	2257	10905	0	2376
	20	3010	0	1733	4816	0	1778	5487	0	1874	5934	0	1938	7224	0	2166	8600	0	2280	9245	0	2360	10836	0	2485
	22	2967	0	1756	4773	0	1801	5418	0	1913	5848	0	1988	7147	0	2218	8548	0	2371	9348	0	2446	10784	0	2588
	24	2924	0	1778	4730	0	1824	5370	0	1951	5796	0	2036	7086	0	2271	8497	0	2462	9297	0	2540	10630	0	2693
2.5+2.5+6	16	3096	0	1672	4902	0	1718	5588	0	1791	6046	0	1840	7362	0	2059	8695	0	2086	9486	0	2142	10948	0	2249
	18	3053	0	1695	4859	0	1740	5535	0	1828	5986	0	1887	7284	0	2111	8652	0	2192	9451	0	2237	10905	0	2355
	20	3010	0	1718	4816	0	1763	5487	0	1858	5934	0	1921	7224	0	2147	8600	0	2260	9245	0	2339	10836	0	2463
	22	2967	0	1740	4773	0	1785	5418	0	1897	5848	0	1971	7147	0	2199	8548	0	2350	9348	0	2425	10784	0	2565
	24	2924	0	1763	4730	0	1808	5370	0	1934	5796	0	2018	7086	0	2251	8497	0	2441	9297	0	2518	10630	0	2669
2.5+3.5+3.5	16	3096	0	1695	4902	0	1740	5588	0	1815	6046	0	1864	7362	0	2086	8695	0	2114	9486	0	2171	10948	0	2279
	18	3053	0	1718	4859	0	1763	5535	0	1853	5986	0	1912	7284	0	2139	8652	0	2221	9451	0	2267	10905	0	2386
	20	3010	0	1740	4816	0	1786	5487	0	1882	5934	0	1947	7224	0	2176	8600	0	2290	9245	0	2370	10836	0	2496
	22	2967	0	1763	4773	0	1809	5418	0	1922	5848	0	1997	7147	0	2228	8548	0	2382	9348	0	2457	10784	0	2599
	24	2924	0	1786	4730	0	1832	5370	0	1960	5796	0	2045	7086	0	2281	8497	0	2473	9297	0	2551	10630	0	2704
2.5+3.5+5	16	3096	0	1687	4902	0	1733	5588	0	1807	6046	0	1856	7362	0	2077	8695	0	2104	9486	0	2161	10948	0	2269
	18	3053	0	1710	4859	0	1756	5535	0	1845	5986	0	1904	7284	0	2130	8652	0	2212	9451	0	2257	10905	0	2376
	20	3010	0	1733	4816	0	1778	5487	0	1874	5934	0	1938	7224	0	2166	8600	0	2280	9245	0	2360	10836	0	2485
	22	2967	0	1756	4773	0	1801	5418	0	1913	5848	0	1988	7147	0	2218	8548	0	2371	9348	0	2446	10784	0	2588
	24	2924	0	1778	4730	0	1824	5370	0	1951	5796	0	2036	7086	0	2271	8497	0	2462	9297	0	2540	10630	0	2693
3.5+3.5+3.5	16	3096	0	1687	4902	0	1733	5588	0	1807	6046	0	1856	7362	0	2077	8695	0	2104	9486	0	2161	10948	0	2269
	18	3053	0	1710	4859	0	1756	5535	0	1845	5986	0	1904	7284	0	2130	8652	0	2212	9451	0	2257	10905	0	2376
	20	3010	0	1733	4816	0	1778	5487	0	1874	5934	0	1938	7224	0	2166	8600	0	2280	9245	0	2360	10836	0	2485
	22	2967	0	1756	4773	0	1801	5418	0	1913	5848	0	1988	7147	0	2218	8548	0	2371	9348	0	2446	10784	0	2588
	24	2924	0	1778	4730	0	1824	5370	0	1951	5796	0	2036	7086	0	2271	8497	0	2462	9297	0	2540	10630	0	2693

EWB : Evaporator Wet Bulb temperature (°C)
EDB : Evaporator Dry Bulb temperature (°C)
(°CDB) : Outdoor Unit Inlet Air Dry Temperature (°C)

TC : Total Capacity (W)
SHC : Sensible Heating Capacity (W)
PI : Power Input

	INDOOR	OUTDOOR TEMPERATURE (°CDB)																							
	EDB	-15			-10			-7			-5			0			7			10			15		
	°C	TC	SHC	PI	TC	SHC	PI	TC	SHC	PI	TC	SHC	PI	TC	SHC	PI	TC	SHC	PI	TC	SHC	PI	TC	SHC	PI
1.2+1.2+1.2+1.2	16	2592	0	1443	4104	0	1482	4679	0	1545	5062	0	1587	6163	0	1776	7279	0	1800	7942	0	1849	9166	0	1940
	18	2556	0	1463	4068	0	1502	4634	0	1578	5011	0	1628	6098	0	1821	7243	0	1892	7913	0	1931	9130	0	2032
	20	2520	0	1482	4032	0	1521	4594	0	1603	4968	0	1658	6048	0	1853	7200	0	1950	7740	0	2018	9072	0	2126
	22	2484	0	1502	3996	0	1541	4536	0	1636	4896	0	1700	5983	0	1897	7157	0	2028	7826	0	2092	9029	0	2213
	24	2448	0	1521	3960	0	1560	4496	0	1669	4853	0	1741	5933	0	1942	7114	0	2106	7783	0	2172	8899	0	2303
1.2+1.2+1.2+1.8	16	2844	0	1613	4503	0	1657	5133	0	1727	5554	0	1775	6762	0	1986	7987	0	2012	8714	0	2067	10057	0	2169
	18	2805	0	1635	4464	0	1679	5084	0	1764	5498	0	1820	6691	0	2036	7947	0	2115	8682	0	2158	10017	0	2272
	20	2765	0	1657	4424	0	1700	5040	0	1792	5451	0	1853	6636	0	2071	7900	0	2180	8493	0	2256	9954	0	2376
	22	2726	0	1679	4385	0	1722	4977	0	1829	5372	0	1901	6565	0	2121	7853	0	2267	8587	0	2339	9907	0	2474
	24	2686	0	1700	4345	0	1744	4933	0	1866	5325	0	1947	6510	0	2171	7805	0	2354	8540	0	2429	9764	0	2575
1.2+1.2+1.2+2.5	16	3096	0	1628	4902	0	1672	5588	0	1743	6046	0	1791	7362	0	2004	8695	0	2031	9486	0	2086	10948	0	2189
	18	3053	0	1650	4859	0	1694	5535	0	1780	5986	0	1837	7284	0	2055	8652	0	2134	9451	0	2178	10905	0	2292
	20	3010	0	1672	4816	0	1716	5487	0	1808	5934	0	1870	7224	0	2090	8600	0	2200	9245	0	2277	10836	0	2398
	22	2967	0	1694	4773	0	1738	5418	0	1846	5848	0	1918	7147	0	2141	8548	0	2288	9348	0	2361	10784	0	2497
	24	2924	0	1716	4730	0	1760	5370	0	1883	5796	0	1965	7086	0	2191	8497	0	2376	9297	0	2451	10630	0	2598
1.2+1.2+1.2+3.5	16	3096	0	1628	4902	0	1672	5588	0	1743	6046	0	1791	7362	0	2004	8695	0	2031	9486	0	2086	10948	0	2189
	18	3053	0	1650	4859	0	1694	5535	0	1780	5986	0	1837	7284	0	2055	8652	0	2134	9451	0	2178	10905	0	2292
	20	3010	0	1672	4816	0	1716	5487	0	1808	5934	0	1870	7224	0	2090	8600	0	2200	9245	0	2277	10836	0	2398
	22	2967	0	1694	4773	0	1738	5418	0	1846	5848	0	1918	7147	0	2141	8548	0	2288	9348	0	2361	10784	0	2497
	24	2924	0	1716	4730	0	1760	5370	0	1883	5796	0	1965	7086	0	2191	8497	0	2376	9297	0	2451	10630	0	2598
1.2+1.2+1.2+5	16	3096	0	1628	4902	0	1672	5588	0	1743	6046	0	1791	7362	0	2004	8695	0	2031	9486	0	2086	10948	0	2189
	18	3053	0	1650	4859	0	1694	5535	0	1780	5986	0	1837	7284	0	2055	8652	0	2134	9451	0	2178	10905	0	2292
	20	3010	0	1672	4816	0	1716	5487	0	1808	5934	0	1870	7224	0	2090	8600	0	2200	9245	0	2277	10836	0	2398
	22	2967	0	1694	4773	0	1738	5418	0	1846	5848	0	1918	7147	0	2141	8548	0	2288	9348	0	2361	10784	0	2497
	24	2924	0	1716	4730	0	1760	5370	0	1883	5796	0	1965	7086	0	2191	8497	0	2376	9297	0	2451	10630	0	2598
1.2+1.2+1.2+6	16	3096	0	1628	4902	0	1672	5588	0	1743	6046	0	1791	7362	0	2004	8695	0	2031	9486	0	2086	10948	0	2189
	18	3053	0	1650	4859	0	1694	5535	0	1780	5986	0	1837	7284	0	2055	8652	0	2134	9451	0	2178	10905	0	2292
	20	3010	0	1672	4816	0	1716	5487	0	1808	5934	0	1870	7224	0	2090	8600	0	2200	9245	0	2277	10836	0	2398
	22	2967	0	1694	4773	0	1738	5418	0	1846	5848	0	1918	7147	0	2141	8548	0	2288	9348	0	2361	10784	0	2497
	24	2924	0	1716	4730	0	1760	5370	0	1883	5796	0	1965	7086	0	2191	8497	0	2376	9297	0	2451	10630	0	2598
1.2+1.2+1.8+1.8	16	3096	0	1628	4902	0	1672	5588	0	1743	6046	0	1791	7362	0	2004	8695	0	2031	9486	0	2086	10948	0	2189
	18	3053	0	1650	4859	0	1694	5535	0	1780	5986	0	1837	7284	0	2055	8652	0	2134	9451	0	2178	10905	0	2292
	20	3010	0	1672	4816	0	1716	5487	0	1808	5934	0	1870	7224	0	2090	8600	0	2200	9245	0	2277	10836	0	2398
	22	2967	0	1694	4773	0	1738	5418	0	1846	5848	0	1918	7147	0	2141	8548	0	2288	9348	0	2361	10784	0	2497
	24	2924	0	1716	4730	0	1760	5370	0	1883	5796	0	1965	7086	0	2191	8497	0	2376	9297	0	2451	10630	0	2598
1.2+1.2+1.8+2.5	16	3096	0	1628	4902	0	1672	5588	0	1743	6046	0	1791	7362	0	2004	8695	0	2031	9486	0	2086	10948	0	2189
	18	3053	0	1650	4859	0	1694	5535	0	1780	5986	0	1837	7284	0	2055	8652	0	2134	9451	0	2178	10905	0	2292
	20	3010	0	1672	4816	0	1716	5487	0	1808	5934	0	1870	7224	0	2090	8600	0	2200	9245	0	2277	10836	0	2398
	22	2967	0	1694	4773	0	1738	5418	0	1846	5848	0	1918	7147	0	2141	8548	0	2288	9348	0	2361	10784	0	2497
	24	2924	0	1716	4730	0	1760	5370	0	1883	5796	0	1965	7086	0	2191	8497	0	2376	9297	0	2451	10630	0	2598

EWB : Evaporator Wet Bulb temperature (°C)
EDB : Evaporator Dry Bulb temperature (°C)
(°CDB) : Outdoor Unit Inlet Air Dry Temperature (°C)

TC : Total Capacity (W)
SHC : Sensible Heating Capacity (W)
PI : Power Input

	INDOOR	OUTDOOR TEMPERATURE (°CDB)																							
	EDB	-15			-10			-7			-5			0			7			10			15		
	°C	TC	SHC	PI	TC	SHC	PI	TC	SHC	PI	TC	SHC	PI	TC	SHC	PI	TC	SHC	PI	TC	SHC	PI	TC	SHC	PI
1.2+1.2+1.8+3.5	16	3096	0	1628	4902	0	1672	5588	0	1743	6046	0	1791	7362	0	2004	8695	0	2031	9486	0	2086	10948	0	2189
	18	3053	0	1650	4859	0	1694	5535	0	1780	5986	0	1837	7284	0	2055	8652	0	2134	9451	0	2178	10905	0	2292
	20	3010	0	1672	4816	0	1716	5487	0	1808	5934	0	1870	7224	0	2090	8600	0	2200	9245	0	2277	10836	0	2398
	22	2967	0	1694	4773	0	1738	5418	0	1846	5848	0	1918	7147	0	2141	8548	0	2288	9348	0	2361	10784	0	2497
	24	2924	0	1716	4730	0	1760	5370	0	1883	5796	0	1965	7086	0	2191	8497	0	2376	9297	0	2451	10630	0	2598
1.2+1.2+1.8+5	16	3096	0	1628	4902	0	1672	5588	0	1743	6046	0	1791	7362	0	2004	8695	0	2031	9486	0	2086	10948	0	2189
	18	3053	0	1650	4859	0	1694	5535	0	1780	5986	0	1837	7284	0	2055	8652	0	2134	9451	0	2178	10905	0	2292
	20	3010	0	1672	4816	0	1716	5487	0	1808	5934	0	1870	7224	0	2090	8600	0	2200	9245	0	2277	10836	0	2398
	22	2967	0	1694	4773	0	1738	5418	0	1846	5848	0	1918	7147	0	2141	8548	0	2288	9348	0	2361	10784	0	2497
	24	2924	0	1716	4730	0	1760	5370	0	1883	5796	0	1965	7086	0	2191	8497	0	2376	9297	0	2451	10630	0	2598
1.2+1.2+1.8+6	16	3096	0	1613	4902	0	1657	5588	0	1727	6046	0	1775	7362	0	1986	8695	0	2012	9486	0	2067	10948	0	2169
	18	3053	0	1635	4859	0	1679	5535	0	1764	5986	0	1820	7284	0	2036	8652	0	2115	9451	0	2158	10905	0	2272
	20	3010	0	1657	4816	0	1700	5487	0	1792	5934	0	1853	7224	0	2071	8600	0	2180	9245	0	2256	10836	0	2376
	22	2967	0	1679	4773	0	1722	5418	0	1829	5848	0	1901	7147	0	2121	8548	0	2267	9348	0	2339	10784	0	2474
	24	2924	0	1700	4730	0	1744	5370	0	1866	5796	0	1947	7086	0	2171	8497	0	2354	9297	0	2429	10630	0	2575
1.2+1.2+2.5+2.5	16	3096	0	1628	4902	0	1672	5588	0	1743	6046	0	1791	7362	0	2004	8695	0	2031	9486	0	2086	10948	0	2189
	18	3053	0	1650	4859	0	1694	5535	0	1780	5986	0	1837	7284	0	2055	8652	0	2134	9451	0	2178	10905	0	2292
	20	3010	0	1672	4816	0	1716	5487	0	1808	5934	0	1870	7224	0	2090	8600	0	2200	9245	0	2277	10836	0	2398
	22	2967	0	1694	4773	0	1738	5418	0	1846	5848	0	1918	7147	0	2141	8548	0	2288	9348	0	2361	10784	0	2497
	24	2924	0	1716	4730	0	1760	5370	0	1883	5796	0	1965	7086	0	2191	8497	0	2376	9297	0	2451	10630	0	2598
1.2+1.2+2.5+3.5	16	3096	0	1628	4902	0	1672	5588	0	1743	6046	0	1791	7362	0	2004	8695	0	2031	9486	0	2086	10948	0	2189
	18	3053	0	1650	4859	0	1694	5535	0	1780	5986	0	1837	7284	0	2055	8652	0	2134	9451	0	2178	10905	0	2292
	20	3010	0	1672	4816	0	1716	5487	0	1808	5934	0	1870	7224	0	2090	8600	0	2200	9245	0	2277	10836	0	2398
	22	2967	0	1694	4773	0	1738	5418	0	1846	5848	0	1918	7147	0	2141	8548	0	2288	9348	0	2361	10784	0	2497
	24	2924	0	1716	4730	0	1760	5370	0	1883	5796	0	1965	7086	0	2191	8497	0	2376	9297	0	2451	10630	0	2598
1.2+1.2+2.5+5	16	3096	0	1613	4902	0	1657	5588	0	1727	6046	0	1775	7362	0	1986	8695	0	2012	9486	0	2067	10948	0	2169
	18	3053	0	1635	4859	0	1679	5535	0	1764	5986	0	1820	7284	0	2036	8652	0	2115	9451	0	2158	10905	0	2272
	20	3010	0	1657	4816	0	1700	5487	0	1792	5934	0	1853	7224	0	2071	8600	0	2180	9245	0	2256	10836	0	2376
	22	2967	0	1679	4773	0	1722	5418	0	1829	5848	0	1901	7147	0	2121	8548	0	2267	9348	0	2339	10784	0	2474
	24	2924	0	1700	4730	0	1744	5370	0	1866	5796	0	1947	7086	0	2171	8497	0	2354	9297	0	2429	10630	0	2575
1.2+1.2+2.5+6	16	3096	0	1613	4902	0	1657	5588	0	1727	6046	0	1775	7362	0	1986	8695	0	2012	9486	0	2067	10948	0	2169
	18	3053	0	1635	4859	0	1679	5535	0	1764	5986	0	1820	7284	0	2036	8652	0	2115	9451	0	2158	10905	0	2272
	20	3010	0	1657	4816	0	1700	5487	0	1792	5934	0	1853	7224	0	2071	8600	0	2180	9245	0	2256	10836	0	2376
	22	2967	0	1679	4773	0	1722	5418	0	1829	5848	0	1901	7147	0	2121	8548	0	2267	9348	0	2339	10784	0	2474
	24	2924	0	1700	4730	0	1744	5370	0	1866	5796	0	1947	7086	0	2171	8497	0	2354	9297	0	2429	10630	0	2575
1.2+1.2+3.5+3.5	16	3096	0	1628	4902	0	1672	5588	0	1743	6046	0	1791	7362	0	2004	8695	0	2031	9486	0	2086	10948	0	2189
	18	3053	0	1650	4859	0	1694	5535	0	1780	5986	0	1837	7284	0	2055	8652	0	2134	9451	0	2178	10905	0	2292
	20	3010	0	1672	4816	0	1716	5487	0	1808	5934	0	1870	7224	0	2090	8600	0	2200	9245	0	2277	10836	0	2398
	22	2967	0	1694	4773	0	1738	5418	0	1846	5848	0	1918	7147	0	2141	8548	0	2288	9348	0	2361	10784	0	2497
	24	2924	0	1716	4730	0	1760	5370	0	1883	5796	0	1965	7086	0	2191	8497	0	2376	9297	0	2451	10630	0	2598

EWB : Evaporator Wet Bulb temperature (°C)
EDB : Evaporator Dry Bulb temperature (°C)
(°CDB) : Outdoor Unit Inlet Air Dry Temperature (°C)

TC : Total Capacity (W)
SHC : Sensible Heating Capacity (W)
PI : Power Input

	INDOOR	OUTDOOR TEMPERATURE (°CDB)																							
	EDB	-15			-10			-7			-5			0			7			10			15		
	°C	TC	SHC	PI	TC	SHC	PI	TC	SHC	PI	TC	SHC	PI	TC	SHC	PI	TC	SHC	PI	TC	SHC	PI	TC	SHC	PI
1.2+1.2+3.5+5	16	3096	0	1613	4902	0	1657	5588	0	1727	6046	0	1775	7362	0	1986	8695	0	2012	9486	0	2067	10948	0	2169
	18	3053	0	1635	4859	0	1679	5535	0	1764	5986	0	1820	7284	0	2036	8652	0	2115	9451	0	2158	10905	0	2272
	20	3010	0	1657	4816	0	1700	5487	0	1792	5934	0	1853	7224	0	2071	8600	0	2180	9245	0	2256	10836	0	2376
	22	2967	0	1679	4773	0	1722	5418	0	1829	5848	0	1901	7147	0	2121	8548	0	2267	9348	0	2339	10784	0	2474
	24	2924	0	1700	4730	0	1744	5370	0	1866	5796	0	1947	7086	0	2171	8497	0	2354	9297	0	2429	10630	0	2575
1.2+1.8+1.8+1.8	16	3096	0	1628	4902	0	1672	5588	0	1743	6046	0	1791	7362	0	2004	8695	0	2031	9486	0	2086	10948	0	2189
	18	3053	0	1650	4859	0	1694	5535	0	1780	5986	0	1837	7284	0	2055	8652	0	2134	9451	0	2178	10905	0	2292
	20	3010	0	1672	4816	0	1716	5487	0	1808	5934	0	1870	7224	0	2090	8600	0	2200	9245	0	2277	10836	0	2398
	22	2967	0	1694	4773	0	1738	5418	0	1846	5848	0	1918	7147	0	2141	8548	0	2288	9348	0	2361	10784	0	2497
	24	2924	0	1716	4730	0	1760	5370	0	1883	5796	0	1965	7086	0	2191	8497	0	2376	9297	0	2451	10630	0	2598
1.2+1.8+1.8+2.5	16	3096	0	1628	4902	0	1672	5588	0	1743	6046	0	1791	7362	0	2004	8695	0	2031	9486	0	2086	10948	0	2189
	18	3053	0	1650	4859	0	1694	5535	0	1780	5986	0	1837	7284	0	2055	8652	0	2134	9451	0	2178	10905	0	2292
	20	3010	0	1672	4816	0	1716	5487	0	1808	5934	0	1870	7224	0	2090	8600	0	2200	9245	0	2277	10836	0	2398
	22	2967	0	1694	4773	0	1738	5418	0	1846	5848	0	1918	7147	0	2141	8548	0	2288	9348	0	2361	10784	0	2497
	24	2924	0	1716	4730	0	1760	5370	0	1883	5796	0	1965	7086	0	2191	8497	0	2376	9297	0	2451	10630	0	2598
1.2+1.8+1.8+3.5	16	3096	0	1628	4902	0	1672	5588	0	1743	6046	0	1791	7362	0	2004	8695	0	2031	9486	0	2086	10948	0	2189
	18	3053	0	1650	4859	0	1694	5535	0	1780	5986	0	1837	7284	0	2055	8652	0	2134	9451	0	2178	10905	0	2292
	20	3010	0	1672	4816	0	1716	5487	0	1808	5934	0	1870	7224	0	2090	8600	0	2200	9245	0	2277	10836	0	2398
	22	2967	0	1694	4773	0	1738	5418	0	1846	5848	0	1918	7147	0	2141	8548	0	2288	9348	0	2361	10784	0	2497
	24	2924	0	1716	4730	0	1760	5370	0	1883	5796	0	1965	7086	0	2191	8497	0	2376	9297	0	2451	10630	0	2598
1.2+1.8+1.8+5	16	3096	0	1613	4902	0	1657	5588	0	1727	6046	0	1775	7362	0	1986	8695	0	2012	9486	0	2067	10948	0	2169
	18	3053	0	1635	4859	0	1679	5535	0	1764	5986	0	1820	7284	0	2036	8652	0	2115	9451	0	2158	10905	0	2272
	20	3010	0	1657	4816	0	1700	5487	0	1792	5934	0	1853	7224	0	2071	8600	0	2180	9245	0	2256	10836	0	2376
	22	2967	0	1679	4773	0	1722	5418	0	1829	5848	0	1901	7147	0	2121	8548	0	2267	9348	0	2339	10784	0	2474
	24	2924	0	1700	4730	0	1744	5370	0	1866	5796	0	1947	7086	0	2171	8497	0	2354	9297	0	2429	10630	0	2575
1.2+1.8+1.8+6	16	3096	0	1613	4902	0	1657	5588	0	1727	6046	0	1775	7362	0	1986	8695	0	2012	9486	0	2067	10948	0	2169
	18	3053	0	1635	4859	0	1679	5535	0	1764	5986	0	1820	7284	0	2036	8652	0	2115	9451	0	2158	10905	0	2272
	20	3010	0	1657	4816	0	1700	5487	0	1792	5934	0	1853	7224	0	2071	8600	0	2180	9245	0	2256	10836	0	2376
	22	2967	0	1679	4773	0	1722	5418	0	1829	5848	0	1901	7147	0	2121	8548	0	2267	9348	0	2339	10784	0	2474
	24	2924	0	1700	4730	0	1744	5370	0	1866	5796	0	1947	7086	0	2171	8497	0	2354	9297	0	2429	10630	0	2575
1.2+1.8+2.5+2.5	16	3096	0	1628	4902	0	1672	5588	0	1743	6046	0	1791	7362	0	2004	8695	0	2031	9486	0	2086	10948	0	2189
	18	3053	0	1650	4859	0	1694	5535	0	1780	5986	0	1837	7284	0	2055	8652	0	2134	9451	0	2178	10905	0	2292
	20	3010	0	1672	4816	0	1716	5487	0	1808	5934	0	1870	7224	0	2090	8600	0	2200	9245	0	2277	10836	0	2398
	22	2967	0	1694	4773	0	1738	5418	0	1846	5848	0	1918	7147	0	2141	8548	0	2288	9348	0	2361	10784	0	2497
	24	2924	0	1716	4730	0	1760	5370	0	1883	5796	0	1965	7086	0	2191	8497	0	2376	9297	0	2451	10630	0	2598
1.2+1.8+2.5+3.5	16	3096	0	1628	4902	0	1672	5588	0	1743	6046	0	1791	7362	0	2004	8695	0	2031	9486	0	2086	10948	0	2189
	18	3053	0	1650	4859	0	1694	5535	0	1780	5986	0	1837	7284	0	2055	8652	0	2134	9451	0	2178	10905	0	2292
	20	3010	0	1672	4816	0	1716	5487	0	1808	5934	0	1870	7224	0	2090	8600	0	2200	9245	0	2277	10836	0	2398
	22	2967	0	1694	4773	0	1738	5418	0	1846	5848	0	1918	7147	0	2141	8548	0	2288	9348	0	2361	10784	0	2497
	24	2924	0	1716	4730	0	1760	5370	0	1883	5796	0	1965	7086	0	2191	8497	0	2376	9297	0	2451	10630	0	2598

EWB : Evaporator Wet Bulb temperature (°C)
EDB : Evaporator Dry Bulb temperature (°C)
(°CDB) : Outdoor Unit Inlet Air Dry Temperature (°C)

TC : Total Capacity (W)
SHC : Sensible Heating Capacity (W)
PI : Power Input

	INDOOR	OUTDOOR TEMPERATURE (°CDB)																							
	EDB	-15			-10			-7			-5			0			7			10			15		
	°C	TC	SHC	PI	TC	SHC	PI	TC	SHC	PI	TC	SHC	PI	TC	SHC	PI	TC	SHC	PI	TC	SHC	PI	TC	SHC	PI
1.2+1.8+2.5+5	16	3096	0	1613	4902	0	1657	5588	0	1727	6046	0	1775	7362	0	1986	8695	0	2012	9486	0	2067	10948	0	2169
	18	3053	0	1635	4859	0	1679	5535	0	1764	5986	0	1820	7284	0	2036	8652	0	2115	9451	0	2158	10905	0	2272
	20	3010	0	1657	4816	0	1700	5487	0	1792	5934	0	1853	7224	0	2071	8600	0	2180	9245	0	2256	10836	0	2376
	22	2967	0	1679	4773	0	1722	5418	0	1829	5848	0	1901	7147	0	2121	8548	0	2267	9348	0	2339	10784	0	2474
	24	2924	0	1700	4730	0	1744	5370	0	1866	5796	0	1947	7086	0	2171	8497	0	2354	9297	0	2429	10630	0	2575
1.2+1.8+3.5+3.5	16	3096	0	1628	4902	0	1672	5588	0	1743	6046	0	1791	7362	0	2004	8695	0	2031	9486	0	2086	10948	0	2189
	18	3053	0	1650	4859	0	1694	5535	0	1780	5986	0	1837	7284	0	2055	8652	0	2134	9451	0	2178	10905	0	2292
	20	3010	0	1672	4816	0	1716	5487	0	1808	5934	0	1870	7224	0	2090	8600	0	2200	9245	0	2277	10836	0	2398
	22	2967	0	1694	4773	0	1738	5418	0	1846	5848	0	1918	7147	0	2141	8548	0	2288	9348	0	2361	10784	0	2497
	24	2924	0	1716	4730	0	1760	5370	0	1883	5796	0	1965	7086	0	2191	8497	0	2376	9297	0	2451	10630	0	2598
1.2+2.5+2.5+2.5	16	3096	0	1628	4902	0	1672	5588	0	1743	6046	0	1791	7362	0	2004	8695	0	2031	9486	0	2086	10948	0	2189
	18	3053	0	1650	4859	0	1694	5535	0	1780	5986	0	1837	7284	0	2055	8652	0	2134	9451	0	2178	10905	0	2292
	20	3010	0	1672	4816	0	1716	5487	0	1808	5934	0	1870	7224	0	2090	8600	0	2200	9245	0	2277	10836	0	2398
	22	2967	0	1694	4773	0	1738	5418	0	1846	5848	0	1918	7147	0	2141	8548	0	2288	9348	0	2361	10784	0	2497
	24	2924	0	1716	4730	0	1760	5370	0	1883	5796	0	1965	7086	0	2191	8497	0	2376	9297	0	2451	10630	0	2598
1.2+2.5+2.5+3.5	16	3096	0	1628	4902	0	1672	5588	0	1743	6046	0	1791	7362	0	2004	8695	0	2031	9486	0	2086	10948	0	2189
	18	3053	0	1650	4859	0	1694	5535	0	1780	5986	0	1837	7284	0	2055	8652	0	2134	9451	0	2178	10905	0	2292
	20	3010	0	1672	4816	0	1716	5487	0	1808	5934	0	1870	7224	0	2090	8600	0	2200	9245	0	2277	10836	0	2398
	22	2967	0	1694	4773	0	1738	5418	0	1846	5848	0	1918	7147	0	2141	8548	0	2288	9348	0	2361	10784	0	2497
	24	2924	0	1716	4730	0	1760	5370	0	1883	5796	0	1965	7086	0	2191	8497	0	2376	9297	0	2451	10630	0	2598
1.2+2.5+3.5+3.5	16	3096	0	1613	4902	0	1657	5588	0	1727	6046	0	1775	7362	0	1986	8695	0	2012	9486	0	2067	10948	0	2169
	18	3053	0	1635	4859	0	1679	5535	0	1764	5986	0	1820	7284	0	2036	8652	0	2115	9451	0	2158	10905	0	2272
	20	3010	0	1657	4816	0	1700	5487	0	1792	5934	0	1853	7224	0	2071	8600	0	2180	9245	0	2256	10836	0	2376
	22	2967	0	1679	4773	0	1722	5418	0	1829	5848	0	1901	7147	0	2121	8548	0	2267	9348	0	2339	10784	0	2474
	24	2924	0	1700	4730	0	1744	5370	0	1866	5796	0	1947	7086	0	2171	8497	0	2354	9297	0	2429	10630	0	2575
1.8+1.8+1.8+1.8	16	3060	0	1569	4845	0	1611	5523	0	1680	5976	0	1726	7276	0	1931	8594	0	1957	9376	0	2010	10821	0	2109
	18	3018	0	1590	4803	0	1632	5471	0	1715	5916	0	1770	7200	0	1980	8551	0	2056	9342	0	2099	10778	0	2209
	20	2975	0	1611	4760	0	1654	5423	0	1743	5865	0	1802	7140	0	2014	8500	0	2120	9138	0	2194	10710	0	2311
	22	2933	0	1632	4718	0	1675	5355	0	1779	5780	0	1849	7064	0	2063	8449	0	2205	9240	0	2275	10659	0	2406
	24	2890	0	1654	4675	0	1696	5307	0	1814	5729	0	1893	7004	0	2112	8398	0	2290	9189	0	2362	10506	0	2504
1.8+1.8+1.8+2.5	16	3060	0	1569	4845	0	1611	5523	0	1680	5976	0	1726	7276	0	1931	8594	0	1957	9376	0	2010	10821	0	2109
	18	3018	0	1590	4803	0	1632	5471	0	1715	5916	0	1770	7200	0	1980	8551	0	2056	9342	0	2099	10778	0	2209
	20	2975	0	1611	4760	0	1654	5423	0	1743	5865	0	1802	7140	0	2014	8500	0	2120	9138	0	2194	10710	0	2311
	22	2933	0	1632	4718	0	1675	5355	0	1779	5780	0	1849	7064	0	2063	8449	0	2205	9240	0	2275	10659	0	2406
	24	2890	0	1654	4675	0	1696	5307	0	1814	5729	0	1893	7004	0	2112	8398	0	2290	9189	0	2362	10506	0	2504
1.8+1.8+1.8+3.5	16	3060	0	1569	4845	0	1611	5523	0	1680	5976	0	1726	7276	0	1931	8594	0	1957	9376	0	2010	10821	0	2109
	18	3018	0	1590	4803	0	1632	5471	0	1715	5916	0	1770	7200	0	1980	8551	0	2056	9342	0	2099	10778	0	2209
	20	2975	0	1611	4760	0	1654	5423	0	1743	5865	0	1802	7140	0	2014	8500	0	2120	9138	0	2194	10710	0	2311
	22	2933	0	1632	4718	0	1675	5355	0	1779	5780	0	1849	7064	0	2063	8449	0	2205	9240	0	2275	10659	0	2406
	24	2890	0	1654	4675	0	1696	5307	0	1814	5729	0	1893	7004	0	2112	8398	0	2290	9189	0	2362	10506	0	2504

EWB : Evaporator Wet Bulb temperature (°C)
EDB : Evaporator Dry Bulb temperature (°C)
(°CDB) : Outdoor Unit Inlet Air Dry Temperature (°C)

TC : Total Capacity (W)
SHC : Sensible Heating Capacity (W)
PI : Power Input

	INDOOR	OUTDOOR TEMPERATURE (°CDB)																							
	EDB	-15			-10			-7			-5			0			7			10			15		
	°C	TC	SHC	PI	TC	SHC	PI	TC	SHC	PI	TC	SHC	PI	TC	SHC	PI	TC	SHC	PI	TC	SHC	PI	TC	SHC	PI
1.8+1.8+1.8+5	16	3060	0	1561	4845	0	1604	5523	0	1672	5976	0	1718	7276	0	1922	8594	0	1948	9376	0	2000	10821	0	2099
	18	3018	0	1583	4803	0	1625	5471	0	1707	5916	0	1762	7200	0	1971	8551	0	2047	9342	0	2089	10778	0	2199
	20	2975	0	1604	4760	0	1646	5423	0	1734	5865	0	1794	7140	0	2005	8500	0	2110	9138	0	2184	10710	0	2300
	22	2933	0	1625	4718	0	1667	5355	0	1771	5780	0	1840	7064	0	2053	8449	0	2194	9240	0	2264	10659	0	2395
	24	2890	0	1646	4675	0	1688	5307	0	1806	5729	0	1884	7004	0	2102	8398	0	2279	9189	0	2351	10506	0	2492
1.8+1.8+2.5+2.5	16	3060	0	1569	4845	0	1611	5523	0	1680	5976	0	1726	7276	0	1931	8594	0	1957	9376	0	2010	10821	0	2109
	18	3018	0	1590	4803	0	1632	5471	0	1715	5916	0	1770	7200	0	1980	8551	0	2056	9342	0	2099	10778	0	2209
	20	2975	0	1611	4760	0	1654	5423	0	1743	5865	0	1802	7140	0	2014	8500	0	2120	9138	0	2194	10710	0	2311
	22	2933	0	1632	4718	0	1675	5355	0	1779	5780	0	1849	7064	0	2063	8449	0	2205	9240	0	2275	10659	0	2406
	24	2890	0	1654	4675	0	1696	5307	0	1814	5729	0	1893	7004	0	2112	8398	0	2290	9189	0	2362	10506	0	2504
1.8+1.8+2.5+3.5	16	3060	0	1569	4845	0	1611	5523	0	1680	5976	0	1726	7276	0	1931	8594	0	1957	9376	0	2010	10821	0	2109
	18	3018	0	1590	4803	0	1632	5471	0	1715	5916	0	1770	7200	0	1980	8551	0	2056	9342	0	2099	10778	0	2209
	20	2975	0	1611	4760	0	1654	5423	0	1743	5865	0	1802	7140	0	2014	8500	0	2120	9138	0	2194	10710	0	2311
	22	2933	0	1632	4718	0	1675	5355	0	1779	5780	0	1849	7064	0	2063	8449	0	2205	9240	0	2275	10659	0	2406
	24	2890	0	1654	4675	0	1696	5307	0	1814	5729	0	1893	7004	0	2112	8398	0	2290	9189	0	2362	10506	0	2504
1.8+1.8+3.5+3.5	16	3060	0	1561	4845	0	1604	5523	0	1672	5976	0	1718	7276	0	1922	8594	0	1948	9376	0	2000	10821	0	2099
	18	3018	0	1583	4803	0	1625	5471	0	1707	5916	0	1762	7200	0	1971	8551	0	2047	9342	0	2089	10778	0	2199
	20	2975	0	1604	4760	0	1646	5423	0	1734	5865	0	1794	7140	0	2005	8500	0	2110	9138	0	2184	10710	0	2300
	22	2933	0	1625	4718	0	1667	5355	0	1771	5780	0	1840	7064	0	2053	8449	0	2194	9240	0	2264	10659	0	2395
	24	2890	0	1646	4675	0	1688	5307	0	1806	5729	0	1884	7004	0	2102	8398	0	2279	9189	0	2351	10506	0	2492
1.8+2.5+2.5+2.5	16	3060	0	1569	4845	0	1611	5523	0	1680	5976	0	1726	7276	0	1931	8594	0	1957	9376	0	2010	10821	0	2109
	18	3018	0	1590	4803	0	1632	5471	0	1715	5916	0	1770	7200	0	1980	8551	0	2056	9342	0	2099	10778	0	2209
	20	2975	0	1611	4760	0	1654	5423	0	1743	5865	0	1802	7140	0	2014	8500	0	2120	9138	0	2194	10710	0	2311
	22	2933	0	1632	4718	0	1675	5355	0	1779	5780	0	1849	7064	0	2063	8449	0	2205	9240	0	2275	10659	0	2406
	24	2890	0	1654	4675	0	1696	5307	0	1814	5729	0	1893	7004	0	2112	8398	0	2290	9189	0	2362	10506	0	2504
1.8+2.5+2.5+3.5	16	3060	0	1561	4845	0	1604	5523	0	1672	5976	0	1718	7276	0	1922	8594	0	1948	9376	0	2000	10821	0	2099
	18	3018	0	1583	4803	0	1625	5471	0	1707	5916	0	1762	7200	0	1971	8551	0	2047	9342	0	2089	10778	0	2199
	20	2975	0	1604	4760	0	1646	5423	0	1734	5865	0	1794	7140	0	2005	8500	0	2110	9138	0	2184	10710	0	2300
	22	2933	0	1625	4718	0	1667	5355	0	1771	5780	0	1840	7064	0	2053	8449	0	2194	9240	0	2264	10659	0	2395
	24	2890	0	1646	4675	0	1688	5307	0	1806	5729	0	1884	7004	0	2102	8398	0	2279	9189	0	2351	10506	0	2492
2.5+2.5+2.5+2.5	16	3060	0	1561	4845	0	1604	5523	0	1672	5976	0	1718	7276	0	1922	8594	0	1948	9376	0	2000	10821	0	2099
	18	3018	0	1583	4803	0	1625	5471	0	1707	5916	0	1762	7200	0	1971	8551	0	2047	9342	0	2089	10778	0	2199
	20	2975	0	1604	4760	0	1646	5423	0	1734	5865	0	1794	7140	0	2005	8500	0	2110	9138	0	2184	10710	0	2300
	22	2933	0	1625	4718	0	1667	5355	0	1771	5780	0	1840	7064	0	2053	8449	0	2194	9240	0	2264	10659	0	2395
	24	2890	0	1646	4675	0	1688	5307	0	1806	5729	0	1884	7004	0	2102	8398	0	2279	9189	0	2351	10506	0	2492
2.5+2.5+2.5+3.5	16	3060	0	1561	4845	0	1604	5523	0	1672	5976	0	1718	7276	0	1922	8594	0	1948	9376	0	2000	10821	0	2099
	18	3018	0	1583	4803	0	1625	5471	0	1707	5916	0	1762	7200	0	1971	8551	0	2047	9342	0	2089	10778	0	2199
	20	2975	0	1604	4760	0	1646	5423	0	1734	5865	0	1794	7140	0	2005	8500	0	2110	9138	0	2184	10710	0	2300
	22	2933	0	1625	4718	0	1667	5355	0	1771	5780	0	1840	7064	0	2053	8449	0	2194	9240	0	2264	10659	0	2395
	24	2890	0	1646	4675	0	1688	5307	0	1806	5729	0	1884	7004	0	2102	8398	0	2279	9189	0	2351	10506	0	2492

EWB : Evaporator Wet Bulb temperature (°C)
EDB : Evaporator Dry Bulb temperature (°C)
(°CDB) : Outdoor Unit Inlet Air Dry Temperature (°C)

TC : Total Capacity (W)
SHC : Sensible Heating Capacity (W)
PI : Power Input

4.2.12. RAM-90NP5A

COOLING [50Hz, 230V]

	INDOOR		OUTDOOR TEMPERATURE (°CDB)																					
	EWB	EDB	-10			21			27			32			35			40			43			
	°C	°C	TC	SHC	PI	TC	SHC	PI	TC	SHC	PI	TC	SHC	PI	TC	SHC	PI	TC	SHC	PI	TC	SHC	PI	
RAM-90NP5A	12	18	7055	5240	1327	7990	6987	1576	7395	6449	1858	6970	6113	2052	6715	5845	2141	6290	5509	2297	6035	5240	2386	
	14	20	7055	5240	1327	8585	6987	1576	7990	6516	1879	7480	6113	2074	7225	5912	2163	6715	5509	2319	6460	5307	2431	
	16	22	7055	5576	1348	9180	6987	1597	8500	6516	1901	7990	6113	2096	7735	5912	2208	7225	5509	2364	6970	5307	2453	
	18	25	7565	5979	1369	9775	7591	1618	9010	7054	1923	8500	6651	2119	8160	6382	2208	7650	5979	2386	7310	5710	2475	
	19	27	7820	6181	1390	10115	7994	1638	9350	7390	1945	8840	6987	2141	8500	6718	2230	7990	6315	2386	7650	6046	2475	
	22	30	8670	6113	1390	11220	7927	1638	10370	7323	1945	9775	6920	2163	9435	6651	2252	8500	6449	2475	7905	6315	2609	
	24	32	9265	6113	1410	11985	7927	1659	11050	7323	1967	10455	6920	2163	10030	6651	2275	8840	6584	2542	8075	6516	2698	
1.2	12	18	996	740	208	1128	986	247	1044	910	292	984	863	322	948	825	336	888	778	361	852	740	375	
	14	20	996	740	208	1212	986	247	1128	920	295	1056	863	326	1020	835	340	948	778	364	912	749	382	
	16	22	996	787	212	1296	986	251	1200	920	298	1128	863	329	1092	835	347	1020	778	371	984	749	385	
	18	25	1068	844	215	1380	1072	254	1272	996	302	1200	939	333	1152	901	347	1080	844	375	1032	806	389	
	19	27	1104	873	218	1428	1129	257	1320	1043	305	1248	986	336	1200	948	350	1128	892	375	1080	854	389	
	22	30	1224	863	218	1584	1119	257	1464	1034	305	1380	977	340	1332	939	354	1200	910	389	1116	892	410	
	24	32	1308	863	221	1692	1119	260	1560	1034	309	1476	977	340	1416	939	357	1248	929	399	1140	920	424	
1.8	12	18	1494	1110	298	1692	1480	353	1566	1366	417	1476	1295	460	1422	1238	480	1332	1167	515	1278	1110	535	
	14	20	1494	1110	298	1818	1480	353	1692	1380	421	1584	1295	465	1530	1252	485	1422	1167	520	1368	1124	545	
	16	22	1494	1181	302	1944	1480	358	1800	1380	426	1692	1295	470	1638	1252	495	1530	1167	530	1476	1124	550	
	18	25	1602	1266	307	2070	1608	363	1908	1494	431	1800	1408	475	1728	1352	495	1620	1266	535	1548	1209	555	
	19	27	1656	1309	312	2142	1693	367	1980	1565	436	1872	1480	480	1800	1423	500	1692	1337	535	1620	1280	555	
	22	30	1836	1295	312	2376	1679	367	2196	1551	436	2070	1465	485	1998	1408	505	1800	1366	555	1674	1337	585	
	24	32	1962	1295	316	2538	1679	372	2340	1551	441	2214	1465	485	2124	1408	510	1872	1394	570	1710	1380	605	
2.5	12	18	2075	1541	417	2350	2055	495	2175	1897	583	2050	1798	644	1975	1719	672	1850	1620	721	1775	1541	749	
	14	20	2075	1541	417	2525	2055	495	2350	1917	590	2200	1798	651	2125	1739	679	1975	1620	728	1900	1561	763	
	16	22	2075	1640	423	2700	2055	501	2500	1917	597	2350	1798	658	2275	1739	693	2125	1620	742	2050	1561	770	
	18	25	2225	1759	430	2875	2233	508	2650	2075	604	2500	1956	665	2400	1877	693	2250	1759	749	2150	1680	777	
	19	27	2300	1818	436	2975	2351	514	2750	2173	611	2600	2055	672	2500	1976	700	2350	1857	749	2250	1778	777	
	22	30	2550	1798	436	3300	2332	514	3050	2154	611	2875	2035	679	2775	1956	707	2500	1897	777	2325	1857	819	
	24	32	2725	1798	443	3525	2332	521	3250	2154	617	3075	2035	679	2950	1956	714	2600	1936	798	2375	1917	847	
3.5	12	18	2905	2158	619	3290	2877	735	3045	2656	866	2870	2517	957	2765	2407	998	2590	2268	1071	2485	2158	1113	
	14	20	2905	2158	619	3535	2877	735	3290	2683	877	3080	2517	967	2975	2434	1009	2765	2268	1082	2660	2185	1134	
	16	22	2905	2296	629	3780	2877	745	3500	2683	887	3290	2517	978	3185	2434	1030	2975	2268	1102	2870	2185	1144	
	18	25	3115	2462	638	4025	3126	754	3710	2905	897	3500	2739	988	3360	2628	1030	3150	2462	1113	3010	2351	1154	
	19	27	3220	2545	648	4165	3292	764	3850	3043	907	3640	2877	998	3500	2766	1040	3290	2600	1113	3150	2490	1154	
	22	30	3570	2517	648	4620	3264	764	4270	3015	907	4025	2849	1009	3885	2739	1050	3500	2656	1154	3255	2600	1217	
	24	32	3815	2517	658	4935	3264	774	4550	3015	917	4305	2849	1009	4130	2739	1061	3640	2711	1186	3325	2683	1258	
5.0	12	18	4150	3082	917	4700	4110	1088	4350	3794	1283	4100	3596	1417	3950	3438	1478	3700	3240	1586	3550	3082	1648	
	14	20	4150	3082	917	5050	4110	1088	4700	3833	1298	4400	3596	1432	4250	3478	1494	3950	3240	1602	3800	3122	1679	
	16	22	4150	3280	931	5400	4110	1103	5000	3833	1313	4700	3596	1448	4550	3478	1525	4250	3240	1632	4100	3122	1694	
	18	25	4450	3517	945	5750	4465	1117	5300	4149	1328	5000	3912	1463	4800	3754	1525	4500	3517	1648	4300	3359	1709	
	19	27	4600	3636	960	5950	4703	1131	5500	4347	1343	5200	4110	1478	5000	3952	1540	4700	3715	1648	4500	3557	1709	
	22	30	5100	3596	960	6600	4663	1131	6100	4307	1343	5750	4070	1494	5550	3912	1555	5000	3794	1709	4650	3715	1802	
	24	32	5450	3596	974	7050	4663	1146	6500	4307	1358	6150	4070	1494	5900	3912	1571	5200	3873	1756	4750	3833	1863	
1.2+1.2	12	18	1992	1480	333	2256	1973	396	2088	1821	466	1968	1726	515	1896	1650	538	1776	1555	577	1704	1480	599	
	14	20	1992	1480	333	2424	1973	396	2256	1840	472	2112	1726	521	2040	1669	543	1896	1555	582	1824	1499	610	
	16	22	1992	1574	339	2592	1973	401	2400	1840	477	2256	1726	526	2184	1669	554	2040	1555	594	1968	1499	616	
	18	25	2136	1688	344	2760	2143	406	2544	1992	483	2400	1878	532	2304	1802	554	2160	1688	599	2064	1612	622	
	19	27	2208	1745	349	2856	2257	411	2640	2087	488	2496	1973	538	2400	1897	560	2256	1783	599	2160	1707	622	
	22	30	2448	1726	349	3168	2238	411	2928	2068	488	2760	1954	543	2664	1878	566	2400	1821	622	2232	1783	655	
	24	32	2616	1726	354	3384	2238	417	3120	2068	494	2952	1954	543	2832	1878	571	2496	1859	638	2280	1840	678	

EWB : Evaporator Wet Bulb temperature (°C)
EDB : Evaporator Dry Bulb temperature (°C)
(°CDB) : Outdoor Unit Inlet Air Dry Temperature (°C)

TC : Total Capacity (W)
SHC : Sensible Heating Capacity (w)
PI : Power Input

	INDOOR		OUTDOOR TEMPERATURE (°CDB)																				
	EWB	EDB	-10			21			27			32			35			40			43		
	°C	°C	TC	SHC	PI	TC	SHC	PI	TC	SHC	PI	TC	SHC	PI	TC	SHC	PI	TC	SHC	PI	TC	SHC	PI
1.2+2.5	12	18	3071	2281	446	3478	3041	530	3219	2807	625	3034	2661	690	2923	2544	720	2738	2398	773	2627	2281	803
	14	20	3071	2281	446	3737	3041	530	3478	2837	632	3256	2661	698	3145	2573	728	2923	2398	780	2812	2310	818
	16	22	3071	2427	453	3996	3041	537	3700	2837	639	3478	2661	705	3367	2573	743	3145	2398	795	3034	2310	825
	18	25	3293	2603	460	4255	3304	544	3922	3071	647	3700	2895	713	3552	2778	743	3330	2603	803	3182	2486	833
	19	27	3404	2690	467	4403	3480	551	4070	3217	654	3848	3041	720	3700	2924	750	3478	2749	803	3330	2632	833
	22	30	3774	2661	467	4884	3451	551	4514	3187	654	4255	3012	728	4107	2895	758	3700	2807	833	3441	2749	878
	24	32	4033	2661	474	5217	3451	558	4810	3187	662	4551	3012	728	4366	2895	765	3848	2866	855	3515	2837	908
1.2+3.5	12	18	3901	2897	625	4418	3863	742	4089	3566	875	3854	3380	966	3713	3232	1008	3478	3046	1082	3337	2897	1124
	14	20	3901	2897	625	4747	3863	742	4418	3603	885	4136	3380	977	3995	3269	1019	3713	3046	1092	3572	2935	1145
	16	22	3901	3083	635	5076	3863	752	4700	3603	895	4418	3380	987	4277	3269	1040	3995	3046	1113	3854	2935	1155
	18	25	4183	3306	644	5405	4198	762	4982	3900	906	4700	3678	998	4512	3529	1040	4230	3306	1124	4042	3157	1166
	19	27	4324	3417	654	5593	4420	771	5170	4086	916	4888	3863	1008	4700	3715	1050	4418	3492	1124	4230	3343	1166
	22	30	4794	3380	654	6204	4383	771	5734	4049	916	5405	3826	1019	5217	3678	1061	4700	3566	1166	4371	3492	1229
	24	32	5123	3380	664	6627	4383	781	6110	4049	926	5781	3826	1019	5546	3678	1071	4888	3640	1197	4465	3603	1271
1.2+5	12	18	5146	3822	1309	5828	5096	1555	5394	4704	1833	5084	4459	2024	4898	4263	2112	4588	4018	2266	4402	3822	2354
	14	20	5146	3822	1309	6262	5096	1555	5828	4753	1854	5456	4459	2046	5270	4312	2134	4898	4018	2288	4712	3871	2398
	16	22	5146	4067	1330	6696	5096	1575	6200	4753	1876	5828	4459	2068	5642	4312	2178	5270	4018	2332	5084	3871	2420
	18	25	5518	4361	1350	7130	5537	1596	6572	5145	1897	6200	4851	2090	5952	4655	2178	5580	4361	2354	5332	4165	2442
	19	27	5704	4508	1371	7378	5831	1616	6820	5390	1919	6448	5096	2112	6200	4900	2200	5828	4606	2354	5580	4410	2442
	22	30	6324	4459	1371	8184	5782	1616	7564	5341	1919	7130	5047	2134	6882	4851	2222	6200	4704	2442	5766	4606	2574
	24	32	6758	4459	1391	8742	5782	1637	8060	5341	1940	7626	5047	2134	7316	4851	2244	6448	4802	2508	5890	4753	2662
1.8+1.8	12	18	2988	2219	423	3384	2959	502	3132	2731	591	2952	2589	653	2844	2475	682	2664	2333	731	2556	2219	760
	14	20	2988	2219	423	3636	2959	502	3384	2760	598	3168	2589	660	3060	2504	689	2844	2333	738	2736	2248	774
	16	22	2988	2362	429	3888	2959	508	3600	2760	605	3384	2589	667	3276	2504	703	3060	2333	753	2952	2248	781
	18	25	3204	2532	436	4140	3215	515	3816	2988	612	3600	2817	675	3456	2703	703	3240	2532	760	3096	2418	788
	19	27	3312	2618	442	4284	3386	522	3960	3130	619	3744	2959	682	3600	2845	710	3384	2675	760	3240	2561	788
	22	30	3672	2589	442	4752	3357	522	4392	3101	619	4140	2931	689	3996	2817	717	3600	2731	788	3348	2675	831
	24	32	3924	2589	449	5076	3357	528	4680	3101	626	4428	2931	689	4248	2817	724	3744	2788	809	3420	2760	859
1.8+2.5	12	18	3569	2651	595	4042	3534	707	3741	3263	833	3526	3093	920	3397	2957	960	3182	2787	1030	3053	2651	1070
	14	20	3569	2651	595	4343	3534	707	4042	3297	843	3784	3093	930	3655	2991	970	3397	2787	1040	3268	2685	1090
	16	22	3569	2821	605	4644	3534	716	4300	3297	853	4042	3093	940	3913	2991	990	3655	2787	1060	3526	2685	1100
	18	25	3827	3025	614	4945	3840	725	4558	3568	862	4300	3365	950	4128	3229	990	3870	3025	1070	3698	2889	1110
	19	27	3956	3127	623	5117	4044	735	4730	3738	872	4472	3534	960	4300	3399	1000	4042	3195	1070	3870	3059	1110
	22	30	4386	3093	623	5676	4010	735	5246	3704	872	4945	3500	970	4773	3365	1010	4300	3263	1110	3999	3195	1170
	24	32	4687	3093	632	6063	4010	744	5590	3704	882	5289	3500	970	5074	3365	1020	4472	3331	1140	4085	3297	1210
1.8+3.5	12	18	4399	3267	946	4982	4356	1124	4611	4021	1324	4346	3812	1463	4187	3644	1526	3922	3435	1638	3763	3267	1701
	14	20	4399	3267	946	5353	4356	1124	4982	4063	1340	4664	3812	1479	4505	3686	1542	4187	3435	1654	4028	3309	1733
	16	22	4399	3477	961	5724	4356	1139	5300	4063	1356	4982	3812	1495	4823	3686	1574	4505	3435	1685	4346	3309	1749
	18	25	4717	3728	976	6095	4733	1153	5618	4398	1371	5300	4147	1511	5088	3979	1574	4770	3728	1701	4558	3561	1765
	19	27	4876	3854	991	6307	4985	1168	5830	4608	1387	5512	4356	1526	5300	4189	1590	4982	3938	1701	4770	3770	1765
	22	30	5406	3812	991	6996	4943	1168	6466	4566	1387	6095	4315	1542	5883	4147	1606	5300	4021	1765	4929	3938	1860
	24	32	5777	3812	1006	7473	4943	1183	6890	4566	1402	6519	4315	1542	6254	4147	1622	5512	4105	1813	5035	4063	1924
1.8+5.0	12	18	5644	4192	1470	6392	5589	1746	5916	5159	2058	5576	4891	2272	5372	4676	2371	5032	4407	2544	4828	4192	2643
	14	20	5644	4192	1470	6868	5589	1746	6392	5213	2082	5984	4891	2297	5780	4729	2396	6372	4407	2569	5168	4246	2692
	16	22	5644	4461	1493	7344	5589	1769	6800	5213	2106	6392	4891	2322	6188	4729	2445	5780	4407	2618	5576	4246	2717
	18	25	6052	4783	1516	7820	6073	1792	7208	5643	2130	6800	5321	2347	6528	5106	2445	6120	4783	2643	5848	4568	2742
	19	27	6256	4944	1539	8092	6396	1815	7480	5912	2154	7072	5589	2371	6800	5374	2470	6392	5052	2643	6120	4837	2742
	22	30	6936	4891	1539	8976	6342	1815	8296	5858	2154	7820	5536	2396	7548	5321	2495	6800	5159	2742	6324	5052	2890
	24	32	7412	4891	1562	9588	6342	1838	8840	5858	2179	8364	5536	2396	8024	5321	2519	7072	5267	2816	6460	5213	2989

EWB : Evaporator Wet Bulb temperature (°C)
EDB : Evaporator Dry Bulb temperature (°C)
(°CDB) : Outdoor Unit Inlet Air Dry Temperature (°C)

TC : Total Capacity (W)
SHC : Sensible Heating Capacity (w)
PI : Power Input

	INDOOR		OUTDOOR TEMPERATURE (°CDB)																				
	EWB	EDB	-10			21			27			32			35			40			43		
	°C	°C	TC	SHC	PI	TC	SHC	PI	TC	SHC	PI	TC	SHC	PI	TC	SHC	PI	TC	SHC	PI	TC	SHC	PI
2.5+2.5	12	18	4150	3082	815	4700	4110	968	4350	3794	1141	4100	3596	1260	3950	3438	1315	3700	3240	1411	3550	3082	1466
	14	20	4150	3082	815	5050	4110	968	4700	3833	1155	4400	3596	1274	4250	3478	1329	3950	3240	1425	3800	3122	1493
	16	22	4150	3280	828	5400	4110	981	5000	3833	1168	4700	3596	1288	4550	3478	1356	4250	3240	1452	4100	3122	1507
	18	25	4450	3517	841	5750	4465	994	5300	4149	1181	5000	3912	1302	4800	3754	1356	4500	3517	1466	4300	3359	1521
	19	27	4600	3636	854	5950	4703	1007	5500	4347	1195	5200	4110	1315	5000	3952	1370	4700	3715	1466	4500	3557	1521
	22	30	5100	3596	854	6600	4663	1007	6100	4307	1195	5750	4070	1329	5550	3912	1384	5000	3794	1521	4650	3715	1603
	24	32	5450	3596	866	7050	4663	1019	6500	4307	1208	6150	4070	1329	5900	3912	1397	5200	3873	1562	4750	3833	1658
2.5+3.5	12	18	4980	3699	1190	5640	4932	1414	5220	4552	1666	4920	4315	1840	4740	4126	1920	4440	3889	2060	4260	3699	2140
	14	20	4980	3699	1190	6060	4932	1414	5640	4600	1686	5280	4315	1860	5100	4173	1940	4740	3889	2080	4560	3746	2180
	16	22	4980	3936	1209	6480	4932	1432	6000	4600	1705	5640	4315	1880	5460	4173	1980	5100	3889	2120	4920	3746	2200
	18	25	5340	4220	1228	6900	5359	1451	6360	4979	1725	6000	4695	1900	5760	4505	1980	5400	4220	2140	5160	4031	2220
	19	27	5520	4363	1246	7140	5643	1469	6600	5216	1744	6240	4932	1920	6000	4742	2000	5640	4458	2140	5400	4268	2220
	22	30	6120	4315	1246	7920	5596	1469	7320	5169	1744	6900	4884	1940	6660	4695	2020	6000	4552	2220	5580	4458	2340
	24	32	6540	4315	1265	8460	5596	1488	7800	5169	1764	7380	4884	1940	7080	4695	2040	6240	4647	2280	5700	4600	2420
2.5+5.0	12	18	6225	4624	1714	7050	6165	2036	6525	5691	2399	6150	5394	2650	5925	5157	2765	5550	4861	2966	5325	4624	3082
	14	20	6225	4624	1714	7575	6165	2036	7050	5750	2427	6600	5394	2678	6375	5216	2794	5925	4861	2995	5700	4683	3139
	16	22	6225	4920	1741	8100	6165	2062	7500	5750	2455	7050	5394	2707	6825	5216	2851	6375	4861	3053	6150	4683	3168
	18	25	6675	5276	1768	8625	6698	2089	7950	6224	2484	7500	5868	2736	7200	5631	2851	6750	5276	3082	6450	5039	3197
	19	27	6900	5453	1795	8925	7054	2116	8250	6520	2512	7800	6165	2765	7500	5928	2880	7050	5572	3082	6750	5335	3197
	22	30	7650	5394	1795	9900	6995	2116	9150	6461	2512	8625	6105	2794	8325	5868	2909	7500	5691	3197	6975	5572	3370
	24	32	8175	5394	1821	10575	6995	2143	9750	6461	2540	9225	6105	2794	8850	5868	2938	7800	5809	3283	7125	5750	3485
3.5+3.5	12	18	5810	4315	1482	6580	5754	1760	6090	5311	2074	5740	5035	2291	5530	4813	2390	5180	4537	2565	4970	4315	2664
	14	20	5810	4315	1482	7070	5754	1760	6580	5366	2099	6160	5035	2316	5950	4869	2415	5530	4537	2590	5320	4371	2714
	16	22	5810	4592	1505	7560	5754	1783	7000	5366	2123	6580	5035	2341	6370	4869	2465	5950	4537	2639	5740	4371	2739
	18	25	6230	4924	1528	8050	6252	1806	7420	5809	2147	7000	5477	2366	6720	5256	2465	6300	4924	2664	6020	4703	2764
	19	27	6440	5090	1552	8330	6584	1829	7700	6086	2172	7280	5754	2390	7000	5532	2490	6580	5201	2664	6300	4979	2764
	22	30	7140	5035	1552	9240	6528	1829	8540	6030	2172	8050	5698	2415	7770	5477	2515	7000	5311	2764	6510	5201	2913
	24	32	7630	5035	1575	9870	6528	1853	9100	6030	2196	8610	5698	2415	8260	5477	2540	7280	5422	2839	6650	5366	3013
3.5+5.0	12	18	6640	4932	1625	7520	6576	1930	6960	6070	2274	6560	5754	2512	6320	5501	2621	5920	5185	2812	5680	4932	2921
	14	20	6640	4932	1625	8080	6576	1930	7520	6133	2301	7040	5754	2539	6800	5564	2648	6320	5185	2839	6080	4995	2976
	16	22	6640	5248	1650	8640	6576	1955	8000	6133	2328	7520	5754	2566	7280	5564	2703	6800	5185	2894	6560	4995	3003
	18	25	7120	5627	1676	9200	7145	1980	8480	6639	2354	8000	6260	2594	7680	6007	2703	7200	5627	2921	6880	5374	3030
	19	27	7360	5817	1701	9520	7524	2006	8800	6955	2381	8320	6576	2621	8000	6323	2730	7520	5943	2921	7200	5691	3030
	22	30	8160	5754	1701	10560	7461	2006	9760	6892	2381	9200	6513	2648	8880	6260	2757	8000	6070	3030	7440	5943	3194
	24	32	8720	5754	1726	11280	7461	2031	10400	6892	2408	9840	6513	2648	9440	6260	2785	8320	6196	3112	7600	6133	3303
5.0+5.0	12	18	6972	5178	1726	7896	6905	2050	7308	6373	2416	6888	6041	2668	6636	5776	2784	6216	5444	2987	5964	5178	3103
	14	20	6972	5178	1726	8484	6905	2050	7896	6440	2444	7392	6041	2697	7140	5842	2813	6636	5444	3016	6384	5245	3161
	16	22	6972	5510	1753	9072	6905	2077	8400	6440	2473	7896	6041	2726	7644	5842	2871	7140	5444	3074	6888	5245	3190
	18	25	7476	5909	1780	9660	7502	2104	8904	6971	2501	8400	6573	2755	8064	6307	2871	7560	5909	3103	7224	5643	3219
	19	27	7728	6108	1807	9996	7900	2131	9240	7303	2529	8736	6905	2784	8400	6639	2900	7896	6241	3103	7560	5975	3219
	22	30	8568	6041	1807	11088	7834	2131	10248	7236	2529	9660	6838	2813	9324	6573	2929	8400	6373	3219	7812	6241	3393
	24	32	9156	6041	1834	11844	7834	2158	10920	7236	2558	10332	6838	2813	9912	6573	2958	8736	6506	3306	7980	6440	3509
1.2+1.2+1.2	12	18	2988	2219	434	3384	2959	516	3132	2731	608	2952	2589	672	2844	2475	701	2664	2333	752	2556	2219	781
	14	20	2988	2219	434	3636	2959	516	3384	2760	615	3168	2589	679	3060	2504	708	2844	2333	759	2736	2248	796
	16	22	2988	2362	441	3888	2959	523	3600	2760	622	3384	2589	686	3276	2504	723	3060	2333	774	2952	2248	803
	18	25	3204	2532	448	4140	3215	530	3816	2988	630	3600	2817	694	3456	2703	723	3240	2532	781	3096	2418	810
	19	27	3312	2618	455	4284	3386	536	3960	3130	637	3744	2959	701	3600	2845	730	3384	2675	781	3240	2561	810
	22	30	3672	2589	455	4752	3357	536	4392	3101	637	4140	2931	708	3996	2817	737	3600	2731	810	3348	2675	854
	24	32	3924	2589	462	5076	3357	543	4680	3101	644	4428	2931	708	4248	2817	745	3744	2788	832	3420	2760	883

EWB : Evaporator Wet Bulb temperature (°C)
EDB : Evaporator Dry Bulb temperature (°C)
(°CDB) : Outdoor Unit Inlet Air Dry Temperature (°C)

TC : Total Capacity (W)
SHC : Sensible Heating Capacity (w)
PI : Power Input

	INDOOR		OUTDOOR TEMPERATURE (°CDB)																				
	EWB	EDB	-10			21			27			32			35			40			43		
	°C	°C	TC	SHC	PI	TC	SHC	PI	TC	SHC	PI	TC	SHC	PI	TC	SHC	PI	TC	SHC	PI	TC	SHC	PI
1.2+1.2+1.8	12	18	3486	2589	595	3948	3452	707	3654	3187	833	3444	3021	920	3318	2888	960	3108	2722	1030	2982	2589	1070
	14	20	3486	2589	595	4242	3452	707	3948	3220	843	3696	3021	930	3570	2921	970	3318	2722	1040	3192	2622	1090
	16	22	3486	2755	605	4536	3452	716	4200	3220	853	3948	3021	940	3822	2921	990	3570	2722	1060	3444	2622	1100
	18	25	3738	2954	614	4830	3751	725	4452	3485	862	4200	3286	950	4032	3154	990	3780	2954	1070	3612	2822	1110
	19	27	3864	3054	623	4998	3950	735	4620	3651	872	4368	3452	960	4200	3319	1000	3948	3120	1070	3780	2988	1110
	22	30	4284	3021	623	5544	3917	735	5124	3618	872	4830	3419	970	4662	3286	1010	4200	3187	1110	3906	3120	1170
	24	32	4578	3021	632	5922	3917	744	5460	3618	882	5166	3419	970	4956	3286	1020	4368	3253	1140	3990	3220	1210
1.2+1.2+2.5	12	18	4067	3021	786	4606	4028	933	4263	3718	1100	4018	3524	1214	3871	3369	1267	3626	3176	1360	3479	3021	1412
	14	20	4067	3021	786	4949	4028	933	4606	3757	1112	4312	3524	1228	4165	3408	1280	3871	3176	1373	3724	3059	1439
	16	22	4067	3214	798	5292	4028	945	4900	3757	1125	4606	3524	1241	4459	3408	1307	4165	3176	1399	4018	3059	1452
	18	25	4361	3447	810	5635	4376	958	5194	4066	1138	4900	3834	1254	4704	3679	1307	4410	3447	1412	4214	3292	1465
	19	27	4508	3563	822	5831	4609	970	5390	4260	1151	5096	4028	1267	4900	3873	1320	4606	3640	1412	4410	3485	1465
	22	30	4998	3524	822	6468	4570	970	5978	4221	1151	5635	3989	1280	5439	3834	1333	4900	3718	1465	4557	3640	1544
	24	32	5341	3524	835	6909	4570	982	6370	4221	1164	6027	3989	1280	5782	3834	1346	5096	3795	1505	4655	3757	1597
1.2+1.2+3.5	12	18	4897	3637	1042	5546	4850	1237	5133	4477	1458	4838	4243	1610	4661	4057	1680	4366	3824	1803	4189	3637	1873
	14	20	4897	3637	1042	5959	4850	1237	5546	4523	1475	5192	4243	1628	5015	4104	1698	4661	3824	1820	4484	3684	1908
	16	22	4897	3870	1058	6372	4850	1253	5900	4523	1492	5546	4243	1645	5369	4104	1733	5015	3824	1855	4838	3684	1925
	18	25	5251	4150	1074	6785	5269	1269	6254	4896	1509	5900	4616	1663	5664	4430	1733	5310	4150	1873	5074	3964	1943
	19	27	5428	4290	1090	7021	5549	1286	6490	5129	1526	6136	4850	1680	5900	4663	1750	5546	4383	1873	5310	4197	1943
	22	30	6018	4243	1090	7788	5502	1286	7198	5083	1526	6785	4803	1698	6549	4616	1768	5900	4477	1943	5487	4383	2048
	24	32	6431	4243	1107	8319	5502	1302	7670	5083	1544	7257	4803	1698	6962	4616	1785	6136	4570	1995	5605	4523	2118
1.2+1.2+5	12	18	6142	4562	1250	6956	6083	1484	6438	5615	1749	6068	5322	1932	5846	5088	2016	5476	4796	2163	5254	4562	2247
	14	20	6142	4562	1250	7474	6083	1484	6956	5673	1770	6512	5322	1953	6290	5147	2037	5846	4796	2184	5624	4620	2289
	16	22	6142	4854	1269	7992	6083	1504	7400	5673	1790	6956	5322	1974	6734	5147	2079	6290	4796	2226	6068	4620	2310
	18	25	6586	5205	1289	8510	6609	1523	7844	6141	1811	7400	5790	1995	7104	5556	2079	6660	5205	2247	6364	4971	2331
	19	27	6808	5381	1309	8806	6960	1543	8140	6433	1832	7696	6083	2016	7400	5849	2100	6956	5498	2247	6660	5264	2331
	22	30	7548	5322	1309	9768	6901	1543	9028	6375	1832	8510	6024	2037	8214	5790	2121	7400	5615	2331	6882	5498	2457
	24	32	8066	5322	1328	10434	6901	1562	9620	6375	1852	9102	6024	2037	8732	5790	2142	7696	5732	2394	7030	5673	2541
1.2+1.8+1.8	12	18	3984	2959	804	4512	3945	954	4176	3642	1125	3936	3452	1242	3792	3301	1296	3552	3111	1391	3408	2959	1445
	14	20	3984	2959	804	4848	3945	954	4512	3680	1138	4224	3452	1256	4080	3338	1310	3792	3111	1404	3648	2997	1472
	16	22	3984	3149	816	5184	3945	967	4800	3680	1151	4512	3452	1269	4368	3338	1337	4080	3111	1431	3936	2997	1485
	18	25	4272	3376	829	5520	4287	979	5088	3983	1164	4800	3756	1283	4608	3604	1337	4320	3376	1445	4128	3225	1499
	19	27	4416	3490	841	5712	4514	992	5280	4173	1177	4992	3945	1296	4800	3794	1350	4512	3566	1445	4320	3414	1499
	22	30	4896	3452	841	6336	4477	992	5856	4135	1177	5520	3908	1310	5328	3756	1364	4800	3642	1499	4464	3566	1580
	24	32	5232	3452	854	6768	4477	1004	6240	4135	1191	5904	3908	1310	5664	3756	1377	4992	3718	1539	4560	3680	1634
1.2+1.8+2.5	12	18	4565	3391	887	5170	4521	1053	4785	4173	1241	4510	3956	1371	4345	3782	1430	4070	3564	1535	3905	3391	1594
	14	20	4565	3391	887	5555	4521	1053	5170	4217	1256	4840	3956	1386	4675	3825	1445	4345	3564	1550	4180	3434	1624
	16	22	4565	3608	901	5940	4521	1067	5500	4217	1270	5170	3956	1401	5005	3825	1475	4675	3564	1579	4510	3434	1639
	18	25	4895	3869	915	6325	4912	1081	5830	4564	1285	5500	4303	1416	5280	4130	1475	4950	3869	1594	4730	3695	1654
	19	27	5060	3999	928	6545	5173	1095	6050	4782	1300	5720	4521	1430	5500	4347	1490	5170	4086	1594	4950	3912	1654
	22	30	5610	3956	928	7260	5129	1095	6710	4738	1300	6325	4477	1445	6105	4303	1505	5500	4173	1654	5115	4086	1743
	24	32	5995	3956	942	7755	5129	1109	7150	4738	1314	6765	4477	1445	6490	4303	1520	5720	4260	1699	5225	4217	1803
1.2+1.8+3.5	12	18	5395	4007	1101	6110	5343	1308	5655	4932	1541	5330	4675	1702	5135	4469	1776	4810	4213	1906	4615	4007	1980
	14	20	5395	4007	1101	6565	5343	1308	6110	4983	1559	5720	4675	1721	5525	4521	1795	5135	4213	1924	4940	4058	2017
	16	22	5395	4264	1118	7020	5343	1325	6500	4983	1577	6110	4675	1739	5915	4521	1832	5525	4213	1961	5330	4058	2035
	18	25	5785	4572	1136	7475	5805	1342	6890	5394	1595	6500	5086	1758	6240	4880	1832	5850	4572	1980	5590	4367	2054
	19	27	5980	4726	1153	7735	6113	1359	7150	5651	1614	6760	5343	1776	6500	5137	1850	6110	4829	1980	5850	4624	2054
	22	30	6630	4675	1153	8580	6062	1359	7930	5600	1614	7475	5291	1795	7215	5086	1869	6500	4932	2054	6045	4829	2165
	24	32	7085	4675	1170	9165	6062	1376	8450	5600	1632	7995	5291	1795	7670	5086	1887	6760	5035	2109	6175	4983	2239

EWB : Evaporator Wet Bulb temperature (°C)
EDB : Evaporator Dry Bulb temperature (°C)
(°CDB) : Outdoor Unit Inlet Air Dry Temperature (°C)

TC : Total Capacity (W)
SHC : Sensible Heating Capacity (w)
PI : Power Input

	INDOOR		OUTDOOR TEMPERATURE (°CDB)																				
	EWB	EDB	-10			21			27			32			35			40			43		
	°C	°C	TC	SHC	PI	TC	SHC	PI	TC	SHC	PI	TC	SHC	PI	TC	SHC	PI	TC	SHC	PI	TC	SHC	PI
1.2+1.8+5	12	18	6640	4932	1327	7520	6576	1576	6960	6070	1858	6560	5754	2052	6320	5501	2141	5920	5185	2297	5680	4932	2386
	14	20	6640	4932	1327	8080	6576	1576	7520	6133	1879	7040	5754	2074	6800	5564	2163	6320	5185	2319	6080	4995	2431
	16	22	6640	5248	1348	8640	6576	1597	8000	6133	1901	7520	5754	2096	7280	5564	2208	6800	5185	2364	6560	4995	2453
	18	25	7120	5627	1369	9200	7145	1618	8480	6639	1923	8000	6260	2119	7680	6007	2208	7200	5627	2386	6880	5374	2475
	19	27	7360	5817	1390	9520	7524	1638	8800	6955	1945	8320	6576	2141	8000	6323	2230	7520	5943	2386	7200	5691	2475
	22	30	8160	5754	1390	10560	7461	1638	9760	6892	1945	9200	6513	2163	8880	6260	2252	8000	6070	2475	7440	5943	2609
	24	32	8720	5754	1410	11280	7461	1659	10400	6892	1967	9840	6513	2163	9440	6260	2275	8320	6196	2542	7600	6133	2698
1.2+2.5+2.5	12	18	5146	3822	1071	5828	5096	1272	5394	4704	1499	5084	4459	1656	4898	4263	1728	4588	4018	1854	4402	3822	1926
	14	20	5146	3822	1071	6262	5096	1272	5828	4753	1517	5456	4459	1674	5270	4312	1746	4898	4018	1872	4712	3871	1962
	16	22	5146	4067	1088	6696	5096	1289	6200	4753	1535	5828	4459	1692	5642	4312	1782	5270	4018	1908	5084	3871	1980
	18	25	5518	4361	1105	7130	5537	1306	6572	5145	1552	6200	4851	1710	5952	4655	1782	5580	4361	1926	5332	4165	1998
	19	27	5704	4508	1122	7378	5831	1322	6820	5390	1570	6448	5096	1728	6200	4900	1800	5828	4606	1926	5580	4410	1998
	22	30	6324	4459	1122	8184	5782	1322	7564	5341	1570	7130	5047	1746	6882	4851	1818	6200	4704	1998	5766	4606	2106
	24	32	6758	4459	1138	8742	5782	1339	8060	5341	1588	7626	5047	1746	7316	4851	1836	6448	4802	2052	5890	4753	2178
1.2+2.5+3.5	12	18	5976	4439	1131	6768	5918	1343	6264	5463	1583	5904	5178	1748	5688	4951	1824	5328	4666	1957	5112	4439	2033
	14	20	5976	4439	1131	7272	5918	1343	6768	5520	1601	6336	5178	1767	6120	5008	1843	5688	4666	1976	5472	4496	2071
	16	22	5976	4723	1149	7776	5918	1361	7200	5520	1620	6768	5178	1786	6552	5008	1881	6120	4666	2014	5904	4496	2090
	18	25	6408	5065	1166	8280	6430	1378	7632	5975	1639	7200	5634	1805	6912	5406	1881	6480	5065	2033	6192	4837	2109
	19	27	6624	5235	1184	8568	6772	1396	7920	6260	1657	7488	5918	1824	7200	5691	1900	6768	5349	2033	6480	5121	2109
	22	30	7344	5178	1184	9504	6715	1396	8784	6203	1657	8280	5861	1843	7992	5634	1919	7200	5463	2109	6696	5349	2223
	24	32	7848	5178	1202	10152	6715	1414	9360	6203	1676	8856	5861	1843	8496	5634	1938	7488	5577	2166	6840	5520	2299
1.2+2.5+5	12	18	7221	5363	1595	8178	7151	1894	7569	6601	2232	7134	6257	2466	6873	5982	2573	6438	5638	2760	6177	5363	2868
	14	20	7221	5363	1595	8787	7151	1894	8178	6670	2259	7656	6257	2492	7395	6051	2600	6873	5638	2787	6612	5432	2921
	16	22	7221	5707	1620	9396	7151	1919	8700	6670	2285	8178	6257	2519	7917	6051	2653	7395	5638	2841	7134	5432	2948
	18	25	7743	6120	1645	10005	7770	1944	9222	7220	2311	8700	6807	2546	8352	6532	2653	7830	6120	2868	7482	5845	2975
	19	27	8004	6326	1670	10353	8183	1969	9570	7564	2337	9048	7151	2573	8700	6876	2680	8178	6464	2868	7830	6188	2975
	22	30	8874	6257	1670	11484	8114	1969	10614	7495	2337	10005	7082	2600	9657	6807	2707	8700	6601	2975	8091	6464	3136
	24	32	9483	6257	1695	12267	8114	1994	11310	7495	2364	10701	7082	2600	10266	6807	2734	9048	6739	3055	8265	6670	3243
1.2+3.5+3.5	12	18	6806	5055	1524	7708	6740	1809	7134	6222	2132	6724	5898	2355	6478	5638	2458	6068	5314	2637	5822	5055	2739
	14	20	6806	5055	1524	8282	6740	1809	7708	6286	2158	7216	5898	2381	6970	5703	2483	6478	5314	2662	6232	5120	2790
	16	22	6806	5379	1548	8856	6740	1833	8200	6286	2183	7708	5898	2406	7462	5703	2534	6970	5314	2714	6724	5120	2816
	18	25	7298	5768	1571	9430	7323	1857	8692	6805	2208	8200	6416	2432	7872	6157	2534	7380	5768	2739	7052	5509	2842
	19	27	7544	5962	1595	9758	7712	1881	9020	7129	2233	8528	6740	2458	8200	6481	2560	7708	6092	2739	7380	5833	2842
	22	30	8364	5898	1595	10824	7647	1881	10004	7064	2233	9430	6675	2483	9102	6416	2586	8200	6222	2842	7626	6092	2995
	24	32	8938	5898	1619	11562	7647	1905	10660	7064	2258	10086	6675	2483	9676	6416	2611	8528	6351	2918	7790	6286	3098
1.2+3.5+5	12	18	7470	5548	1631	8460	7398	1937	7830	6829	2282	7380	6473	2521	7110	6188	2630	6660	5833	2822	6390	5548	2932
	14	20	7470	5548	1631	9090	7398	1937	8460	6900	2309	7920	6473	2548	7650	6260	2658	7110	5833	2850	6840	5619	2987
	16	22	7470	5904	1656	9720	7398	1962	9000	6900	2336	8460	6473	2576	8190	6260	2713	7650	5833	2904	7380	5619	3014
	18	25	8010	6331	1682	10350	8038	1988	9540	7469	2363	9000	7042	2603	8640	6758	2713	8100	6331	2932	7740	6046	3041
	19	27	8280	6544	1707	10710	8465	2013	9900	7824	2390	9360	7398	2630	9000	7113	2740	8460	6686	2932	8100	6402	3041
	22	30	9180	6473	1707	11880	8394	2013	10980	7753	2390	10350	7327	2658	9990	7042	2767	9000	6829	3041	8370	6686	3206
	24	32	9810	6473	1733	12690	8394	2039	11700	7753	2417	11070	7327	2658	10620	7042	2795	9360	6971	3124	8550	6900	3315
1.2+5+5	12	18	7470	5548	1631	8460	7398	1937	7830	6829	2282	7380	6473	2521	7110	6188	2630	6660	5833	2822	6390	5548	2932
	14	20	7470	5548	1631	9090	7398	1937	8460	6900	2309	7920	6473	2548	7650	6260	2658	7110	5833	2850	6840	5619	2987
	16	22	7470	5904	1656	9720	7398	1962	9000	6900	2336	8460	6473	2576	8190	6260	2713	7650	5833	2904	7380	5619	3014
	18	25	8010	6331	1682	10350	8038	1988	9540	7469	2363	9000	7042	2603	8640	6758	2713	8100	6331	2932	7740	6046	3041
	19	27	8280	6544	1707	10710	8465	2013	9900	7824	2390	9360	7398	2630	9000	7113	2740	8460	6686	2932	8100	6402	3041
	22	30	9180	6473	1707	11880	8394	2013	10980	7753	2390	10350	7327	2658	9990	7042	2767	9000	6829	3041	8370	6686	3206
	24	32	9810	6473	1733	12690	8394	2039	11700	7753	2417	11070	7327	2658	10620	7042	2795	9360	6971	3124	8550	6900	3315

EWB : Evaporator Wet Bulb temperature (°C)
EDB : Evaporator Dry Bulb temperature (°C)
(°CDB) : Outdoor Unit Inlet Air Dry Temperature (°C)

TC : Total Capacity (W)
SHC : Sensible Heating Capacity (w)
PI : Power Input

	INDOOR		OUTDOOR TEMPERATURE (°CDB)																				
	EWB	EDB	-10			21			27			32			35			40			43		
	°C	°C	TC	SHC	PI	TC	SHC	PI	TC	SHC	PI	TC	SHC	PI	TC	SHC	PI	TC	SHC	PI	TC	SHC	PI
1.8+1.8+1.8	12	18	4482	3329	881	5076	4439	1046	4698	4097	1233	4428	3884	1362	4266	3713	1421	3996	3500	1524	3834	3329	1584
	14	20	4482	3329	881	5454	4439	1046	5076	4140	1247	4752	3884	1376	4590	3756	1436	4266	3500	1539	4104	3372	1613
	16	22	4482	3542	895	5832	4439	1060	5400	4140	1262	5076	3884	1391	4914	3756	1465	4590	3500	1569	4428	3372	1628
	18	25	4806	3798	908	6210	4823	1074	5724	4481	1276	5400	4225	1406	5184	4055	1465	4860	3798	1584	4644	3628	1643
	19	27	4968	3926	922	6426	5079	1087	5940	4695	1291	5616	4439	1421	5400	4268	1480	5076	4012	1584	4860	3841	1643
	22	30	5508	3884	922	7128	5036	1087	6588	4652	1291	6210	4396	1436	5994	4225	1495	5400	4097	1643	5022	4012	1732
	24	32	5886	3884	936	7614	5036	1101	7020	4652	1305	6642	4396	1436	6372	4225	1510	5616	4183	1687	5130	4140	1791
1.8+1.8+2.5	12	18	5063	3760	1059	5734	5014	1258	5307	4628	1483	5002	4387	1638	4819	4194	1709	4514	3953	1833	4331	3760	1905
	14	20	5063	3760	1059	6161	5014	1258	5734	4677	1500	5368	4387	1655	5185	4243	1727	4819	3953	1851	4636	3809	1940
	16	22	5063	4002	1076	6588	5014	1275	6100	4677	1518	5734	4387	1673	5551	4243	1762	5185	3953	1887	5002	3809	1958
	18	25	5429	4291	1093	7015	5448	1291	6466	5062	1535	6100	4773	1691	5856	4580	1762	5490	4291	1905	5246	4098	1976
	19	27	5612	4435	1109	7259	5737	1308	6710	5303	1553	6344	5014	1709	6100	4821	1780	5734	4532	1905	5490	4339	1976
	22	30	6222	4387	1109	8052	5689	1308	7442	5255	1553	7015	4966	1727	6771	4773	1798	6100	4628	1976	5673	4532	2083
	24	32	6649	4387	1126	8601	5689	1324	7930	5255	1570	7503	4966	1727	7198	4773	1816	6344	4725	2029	5795	4677	2154
1.8+1.8+3.5	12	18	5893	4377	1137	6674	5836	1350	6177	5387	1591	5822	5106	1757	5609	4882	1834	5254	4601	1967	5041	4377	2044
	14	20	5893	4377	1137	7171	5836	1350	6674	5443	1610	6248	5106	1776	6035	4938	1853	5609	4601	1986	5396	4433	2082
	16	22	5893	4658	1155	7668	5836	1368	7100	5443	1628	6674	5106	1795	6461	4938	1891	6035	4601	2025	5822	4433	2101
	18	25	6319	4994	1172	8165	6341	1386	7526	5892	1647	7100	5555	1815	6816	5331	1891	6390	4994	2044	6106	4770	2120
	19	27	6532	5163	1190	8449	6678	1403	7810	6173	1666	7384	5836	1834	7100	5612	1910	6674	5275	2044	6390	5050	2120
	22	30	7242	5106	1190	9372	6622	1403	8662	6117	1666	8165	5780	1853	7881	5555	1929	7100	5387	2120	6603	5275	2235
	24	32	7739	5106	1208	10011	6622	1421	9230	6117	1685	8733	5780	1853	8378	5555	1948	7384	5499	2177	6745	5443	2311
1.8+1.8+5.0	12	18	7138	5302	1595	8084	7069	1894	7482	6525	2232	7052	6185	2466	6794	5913	2573	6364	5574	2760	6106	5302	2868
	14	20	7138	5302	1595	8686	7069	1894	8084	6593	2259	7568	6185	2492	7310	5981	2600	6794	5574	2787	6536	5370	2921
	16	22	7138	5642	1620	9288	7069	1919	8600	6593	2285	8084	6185	2519	7826	5981	2653	7310	5574	2841	7052	5370	2948
	18	25	7654	6049	1645	9890	7681	1944	9116	7137	2311	8600	6729	2546	8256	6457	2653	7740	6049	2868	7396	5777	2975
	19	27	7912	6253	1670	10234	8088	1969	9460	7477	2337	8944	7069	2573	8600	6797	2680	8084	6389	2868	7740	6117	2975
	22	30	8772	6185	1670	11352	8021	1969	10492	7409	2337	9890	7001	2600	9546	6729	2707	8600	6525	2975	7998	6389	3136
	24	32	9374	6185	1695	12126	8021	1994	11180	7409	2364	10578	7001	2600	10148	6729	2734	8944	6661	3055	8170	6593	3243
1.8+2.5+2.5	12	18	5644	4192	1107	6392	5589	1315	5916	5159	1549	5576	4891	1711	5372	4676	1786	5032	4407	1916	4828	4192	1990
	14	20	5644	4192	1107	6868	5589	1315	6392	5213	1568	5984	4891	1730	5780	4729	1804	5372	4407	1934	5168	4246	2027
	16	22	5644	4461	1124	7344	5589	1332	6800	5213	1586	6392	4891	1748	6188	4729	1841	5780	4407	1972	5576	4246	2046
	18	25	6052	4783	1142	7820	6073	1349	7208	5643	1604	6800	5321	1767	6528	5106	1841	6120	4783	1990	5848	4568	2065
	19	27	6256	4944	1159	8092	6396	1367	7480	5912	1622	7072	5589	1786	6800	5374	1860	6392	5052	1990	6120	4837	2065
	22	30	6936	4891	1159	8976	6342	1367	8296	5858	1622	7820	5536	1804	7548	5321	1879	6800	5159	2065	6324	5052	2176
	24	32	7412	4891	1176	9588	6342	1384	8840	5858	1641	8364	5536	1804	8024	5321	1897	7072	5267	2120	6460	5213	2251
1.8+2.5+3.5	12	18	6474	4809	1303	7332	6411	1548	6786	5918	1824	6396	5610	2015	6162	5363	2102	5772	5055	2256	5538	4809	2343
	14	20	6474	4809	1303	7878	6411	1548	7332	5980	1846	6864	5610	2037	6630	5425	2124	6162	5055	2278	5928	4870	2387
	16	22	6474	5117	1324	8424	6411	1568	7800	5980	1867	7332	5610	2059	7098	5425	2168	6630	5055	2321	6396	4870	2409
	18	25	6942	5487	1344	8970	6966	1589	8268	6473	1889	7800	6103	2081	7488	5857	2168	7020	5487	2343	6708	5240	2431
	19	27	7176	5672	1365	9282	7336	1609	8580	6781	1910	8112	6411	2102	7800	6165	2190	7332	5795	2343	7020	5548	2431
	22	30	7956	5610	1365	10296	7274	1609	9516	6720	1910	8970	6350	2124	8658	6103	2212	7800	5918	2431	7254	5795	2562
	24	32	8502	5610	1385	10998	7274	1629	10140	6720	1932	9594	6350	2124	9204	6103	2234	8112	6041	2497	7410	5980	2650
1.8+2.5+5.0	12	18	7470	5548	1607	8460	7398	1908	7830	6829	2249	7380	6473	2484	7110	6188	2592	6660	5833	2781	6390	5548	2889
	14	20	7470	5548	1607	9090	7398	1908	8460	6900	2276	7920	6473	2511	7650	6260	2619	7110	5833	2808	6840	5619	2943
	16	22	7470	5904	1632	9720	7398	1933	9000	6900	2302	8460	6473	2538	8190	6260	2673	7650	5833	2862	7380	5619	2970
	18	25	8010	6331	1657	10350	8038	1959	9540	7469	2328	9000	7042	2565	8640	6758	2673	8100	6331	2889	7740	6046	2997
	19	27	8280	6544	1682	10710	8465	1984	9900	7824	2355	9360	7398	2592	9000	7113	2700	8460	6686	2889	8100	6402	2997
	22	30	9180	6473	1682	11880	8394	1984	10980	7753	2355	10350	7327	2619	9990	7042	2727	9000	6829	2997	8370	6686	3159
	24	32	9810	6473	1707	12690	8394	2009	11700	7753	2381	11070	7327	2619	10620	7042	2754	9360	6971	3078	8550	6900	3267

EWB : Evaporator Wet Bulb temperature (°C)
EDB : Evaporator Dry Bulb temperature (°C)
(°CDB) : Outdoor Unit Inlet Air Dry Temperature (°C)

TC : Total Capacity (W)
SHC : Sensible Heating Capacity (w)
PI : Power Input

	INDOOR		OUTDOOR TEMPERATURE (°CDB)																				
	EWB	EDB	-10			21			27			32			35			40			43		
	°C	°C	TC	SHC	PI	TC	SHC	PI	TC	SHC	PI	TC	SHC	PI	TC	SHC	PI	TC	SHC	PI	TC	SHC	PI
1.8+3.5+3.5	12	18	7304	5425	1601	8272	7233	1901	7656	6677	2241	7216	6329	2475	6952	6051	2582	6512	5703	2771	6248	5425	2878
	14	20	7304	5425	1601	8888	7233	1901	8272	6746	2267	7744	6329	2502	7480	6120	2609	6952	5703	2798	6688	5495	2932
	16	22	7304	5773	1626	9504	7233	1926	8800	6746	2293	8272	6329	2529	8008	6120	2663	7480	5703	2851	7216	5495	2959
	18	25	7832	6190	1651	10120	7859	1951	9328	7303	2320	8800	6886	2556	8448	6607	2663	7920	6190	2878	7568	5912	2986
	19	27	8096	6399	1676	10472	8277	1976	9680	7651	2346	9152	7233	2582	8800	6955	2690	8272	6538	2878	7920	6260	2986
	22	30	8976	6329	1676	11616	8207	1976	10736	7581	2346	10120	7164	2609	9768	6886	2717	8800	6677	2986	8184	6538	3147
	24	32	9592	6329	1701	12408	8207	2001	11440	7581	2373	10824	7164	2609	10384	6886	2744	9152	6816	3067	8360	6746	3255
1.8+3.5+5.0	12	18	7470	5548	1631	8460	7398	1937	7830	6829	2282	7380	6473	2521	7110	6188	2630	6660	5833	2822	6390	5548	2932
	14	20	7470	5548	1631	9090	7398	1937	8460	6900	2309	7920	6473	2548	7650	6260	2658	7110	5833	2850	6840	5619	2987
	16	22	7470	5904	1656	9720	7398	1962	9000	6900	2336	8460	6473	2576	8190	6260	2713	7650	5833	2904	7380	5619	3014
	18	25	8010	6331	1682	10350	8038	1988	9540	7469	2363	9000	7042	2603	8640	6758	2713	8100	6331	2932	7740	6046	3041
	19	27	8280	6544	1707	10710	8465	2013	9900	7824	2390	9360	7398	2630	9000	7113	2740	8460	6686	2932	8100	6402	3041
	22	30	9180	6473	1707	11880	8394	2013	10980	7753	2390	10350	7327	2658	9990	7042	2767	9000	6829	3041	8370	6686	3206
	24	32	9810	6473	1733	12690	8394	2039	11700	7753	2417	11070	7327	2658	10620	7042	2795	9360	6971	3124	8550	6900	3315
1.8+5.0+5.0	12	18	7470	5548	1631	8460	7398	1937	7830	6829	2282	7380	6473	2521	7110	6188	2630	6660	5833	2822	6390	5548	2932
	14	20	7470	5548	1631	9090	7398	1937	8460	6900	2309	7920	6473	2548	7650	6260	2658	7110	5833	2850	6840	5619	2987
	16	22	7470	5904	1656	9720	7398	1962	9000	6900	2336	8460	6473	2576	8190	6260	2713	7650	5833	2904	7380	5619	3014
	18	25	8010	6331	1682	10350	8038	1988	9540	7469	2363	9000	7042	2603	8640	6758	2713	8100	6331	2932	7740	6046	3041
	19	27	8280	6544	1707	10710	8465	2013	9900	7824	2390	9360	7398	2630	9000	7113	2740	8460	6686	2932	8100	6402	3041
	22	30	9180	6473	1707	11880	8394	2013	10980	7753	2390	10350	7327	2658	9990	7042	2767	9000	6829	3041	8370	6686	3206
	24	32	9810	6473	1733	12690	8394	2039	11700	7753	2417	11070	7327	2658	10620	7042	2795	9360	6971	3124	8550	6900	3315
2.5+2.5+2.5	12	18	6225	4624	1262	7050	6165	1498	6525	5691	1766	6150	5394	1950	5925	5157	2035	5550	4861	2184	5325	4624	2268
	14	20	6225	4624	1262	7575	6165	1498	7050	5750	1787	6600	5394	1972	6375	5216	2056	5925	4861	2205	5700	4683	2311
	16	22	6225	4920	1282	8100	6165	1518	7500	5750	1808	7050	5394	1993	6825	5216	2099	6375	4861	2247	6150	4683	2332
	18	25	6675	5276	1301	8625	6698	1538	7950	6224	1828	7500	5868	2014	7200	5631	2099	6750	5276	2268	6450	5039	2353
	19	27	6900	5453	1321	8925	7054	1558	8250	6520	1849	7800	6165	2035	7500	5928	2120	7050	5572	2268	6750	5335	2353
	22	30	7650	5394	1321	9900	6995	1558	9150	6461	1849	8625	6105	2056	8325	5868	2141	7500	5691	2353	6975	5572	2480
	24	32	8175	5394	1341	10575	6995	1577	9750	6461	1870	9225	6105	2056	8850	5868	2162	7800	5809	2417	7125	5750	2565
2.5+2.5+3.5	12	18	7055	5240	1524	7990	6987	1809	7395	6449	2132	6970	6113	2355	6715	5845	2458	6290	5509	2637	6035	5240	2739
	14	20	7055	5240	1524	8585	6987	1809	7990	6516	2158	7480	6113	2381	7225	5912	2483	6715	5509	2662	6460	5307	2790
	16	22	7055	5576	1548	9180	6987	1833	8500	6516	2183	7990	6113	2406	7735	5912	2534	7225	5509	2714	6970	5307	2816
	18	25	7565	5979	1571	9775	7591	1857	9010	7054	2208	8500	6651	2432	8160	6382	2534	7650	5979	2739	7310	5710	2842
	19	27	7820	6181	1595	10115	7994	1881	9350	7390	2233	8840	6987	2458	8500	6718	2560	7990	6315	2739	7650	6046	2842
	22	30	8670	6113	1595	11220	7927	1881	10370	7323	2233	9775	6920	2483	9435	6651	2586	8500	6449	2842	7905	6315	2995
	24	32	9265	6113	1619	11985	7927	1905	11050	7323	2258	10455	6920	2483	10030	6651	2611	8840	6584	2918	8075	6516	3098
2.5+2.5+5.0	12	18	7470	5548	1655	8460	7398	1965	7830	6829	2316	7380	6473	2558	7110	6188	2669	6660	5833	2863	6390	5548	2975
	14	20	7470	5548	1655	9090	7398	1965	8460	6900	2343	7920	6473	2585	7650	6260	2697	7110	5833	2891	6840	5619	3030
	16	22	7470	5904	1681	9720	7398	1991	9000	6900	2370	8460	6473	2613	8190	6260	2752	7650	5833	2947	7380	5619	3058
	18	25	8010	6331	1706	10350	8038	2017	9540	7469	2397	9000	7042	2641	8640	6758	2752	8100	6331	2975	7740	6046	3086
	19	27	8280	6544	1732	10710	8465	2042	9900	7824	2425	9360	7398	2669	9000	7113	2780	8460	6686	2975	8100	6402	3086
	22	30	9180	6473	1732	11880	8394	2042	10980	7753	2425	10350	7327	2697	9990	7042	2808	9000	6829	3086	8370	6686	3253
	24	32	9810	6473	1758	12690	8394	2068	11700	7753	2452	11070	7327	2697	10620	7042	2836	9360	6971	3169	8550	6900	3364
2.5+3.5+3.5	12	18	7470	5548	1637	8460	7398	1944	7830	6829	2291	7380	6473	2530	7110	6188	2640	6660	5833	2833	6390	5548	2943
	14	20	7470	5548	1637	9090	7398	1944	8460	6900	2318	7920	6473	2558	7650	6260	2668	7110	5833	2860	6840	5619	2998
	16	22	7470	5904	1662	9720	7398	1969	9000	6900	2345	8460	6473	2585	8190	6260	2723	7650	5833	2915	7380	5619	3025
	18	25	8010	6331	1688	10350	8038	1995	9540	7469	2372	9000	7042	2613	8640	6758	2723	8100	6331	2943	7740	6046	3053
	19	27	8280	6544	1714	10710	8465	2020	9900	7824	2399	9360	7398	2640	9000	7113	2750	8460	6686	2943	8100	6402	3053
	22	30	9180	6473	1714	11880	8394	2020	10980	7753	2399	10350	7327	2668	9990	7042	2778	9000	6829	3053	8370	6686	3218
	24	32	9810	6473	1739	12690	8394	2046	11700	7753	2426	11070	7327	2668	10620	7042	2805	9360	6971	3135	8550	6900	3328

EWB : Evaporator Wet Bulb temperature (°C)
EDB : Evaporator Dry Bulb temperature (°C)
(°CDB) : Outdoor Unit Inlet Air Dry Temperature (°C)

TC : Total Capacity (W)
SHC : Sensible Heating Capacity (w)
PI : Power Input

	INDOOR		OUTDOOR TEMPERATURE (°CDB)																				
	EWB	EDB	-10			21			27			32			35			40			43		
	°C	°C	TC	SHC	PI	TC	SHC	PI	TC	SHC	PI	TC	SHC	PI	TC	SHC	PI	TC	SHC	PI	TC	SHC	PI
2.5+3.5+5.0	12	18	7470	5548	1649	8460	7398	1958	7830	6829	2307	7380	6473	2548	7110	6188	2659	6660	5833	2853	6390	5548	2964
	14	20	7470	5548	1649	9090	7398	1958	8460	6900	2335	7920	6473	2576	7650	6260	2687	7110	5833	2881	6840	5619	3019
	16	22	7470	5904	1674	9720	7398	1984	9000	6900	2362	8460	6473	2604	8190	6260	2742	7650	5833	2936	7380	5619	3047
	18	25	8010	6331	1700	10350	8038	2009	9540	7469	2389	9000	7042	2632	8640	6758	2742	8100	6331	2964	7740	6046	3075
	19	27	8280	6544	1726	10710	8465	2035	9900	7824	2416	9360	7398	2659	9000	7113	2770	8460	6686	2964	8100	6402	3075
	22	30	9180	6473	1726	11880	8394	2035	10980	7753	2416	10350	7327	2687	9990	7042	2798	9000	6829	3075	8370	6686	3241
	24	32	9810	6473	1752	12690	8394	2061	11700	7753	2443	11070	7327	2687	10620	7042	2825	9360	6971	3158	8550	6900	3352
2.5+5.0+5.0	12	18	7470	5548	1655	8460	7398	1965	7830	6829	2316	7380	6473	2558	7110	6188	2669	6660	5833	2863	6390	5548	2975
	14	20	7470	5548	1655	9090	7398	1965	8460	6900	2343	7920	6473	2585	7650	6260	2697	7110	5833	2891	6840	5619	3030
	16	22	7470	5904	1681	9720	7398	1991	9000	6900	2370	8460	6473	2613	8190	6260	2752	7650	5833	2947	7380	5619	3058
	18	25	8010	6331	1706	10350	8038	2017	9540	7469	2397	9000	7042	2641	8640	6758	2752	8100	6331	2975	7740	6046	3086
	19	27	8280	6544	1732	10710	8465	2042	9900	7824	2425	9360	7398	2669	9000	7113	2780	8460	6686	2975	8100	6402	3086
	22	30	9180	6473	1732	11880	8394	2042	10980	7753	2425	10350	7327	2697	9990	7042	2808	9000	6829	3086	8370	6686	3253
	24	32	9810	6473	1758	12690	8394	2068	11700	7753	2452	11070	7327	2697	10620	7042	2836	9360	6971	3169	8550	6900	3364
3.5+3.5+3.5	12	18	7470	5548	1631	8460	7398	1937	7830	6829	2282	7380	6473	2521	7110	6188	2630	6660	5833	2822	6390	5548	2932
	14	20	7470	5548	1631	9090	7398	1937	8460	6900	2309	7920	6473	2548	7650	6260	2658	7110	5833	2850	6840	5619	2987
	16	22	7470	5904	1656	9720	7398	1962	9000	6900	2336	8460	6473	2576	8190	6260	2713	7650	5833	2904	7380	5619	3014
	18	25	8010	6331	1682	10350	8038	1988	9540	7469	2363	9000	7042	2603	8640	6758	2713	8100	6331	2932	7740	6046	3041
	19	27	8280	6544	1707	10710	8465	2013	9900	7824	2390	9360	7398	2630	9000	7113	2740	8460	6686	2932	8100	6402	3041
	22	30	9180	6473	1707	11880	8394	2013	10980	7753	2390	10350	7327	2658	9990	7042	2767	9000	6829	3041	8370	6686	3206
	24	32	9810	6473	1733	12690	8394	2039	11700	7753	2417	11070	7327	2658	10620	7042	2795	9360	6971	3124	8550	6900	3315
3.5+3.5+5.0	12	18	7470	5548	1655	8460	7398	1965	7830	6829	2316	7380	6473	2558	7110	6188	2669	6660	5833	2863	6390	5548	2975
	14	20	7470	5548	1655	9090	7398	1965	8460	6900	2343	7920	6473	2585	7650	6260	2697	7110	5833	2891	6840	5619	3030
	16	22	7470	5904	1681	9720	7398	1991	9000	6900	2370	8460	6473	2613	8190	6260	2752	7650	5833	2947	7380	5619	3058
	18	25	8010	6331	1706	10350	8038	2017	9540	7469	2397	9000	7042	2641	8640	6758	2752	8100	6331	2975	7740	6046	3086
	19	27	8280	6544	1732	10710	8465	2042	9900	7824	2425	9360	7398	2669	9000	7113	2780	8460	6686	2975	8100	6402	3086
	22	30	9180	6473	1732	11880	8394	2042	10980	7753	2425	10350	7327	2697	9990	7042	2808	9000	6829	3086	8370	6686	3253
	24	32	9810	6473	1758	12690	8394	2068	11700	7753	2452	11070	7327	2697	10620	7042	2836	9360	6971	3169	8550	6900	3364
3.5+5.0+5.0	12	18	7470	5548	1655	8460	7398	1965	7830	6829	2316	7380	6473	2558	7110	6188	2669	6660	5833	2863	6390	5548	2975
	14	20	7470	5548	1655	9090	7398	1965	8460	6900	2343	7920	6473	2585	7650	6260	2697	7110	5833	2891	6840	5619	3030
	16	22	7470	5904	1681	9720	7398	1991	9000	6900	2370	8460	6473	2613	8190	6260	2752	7650	5833	2947	7380	5619	3058
	18	25	8010	6331	1706	10350	8038	2017	9540	7469	2397	9000	7042	2641	8640	6758	2752	8100	6331	2975	7740	6046	3086
	19	27	8280	6544	1732	10710	8465	2042	9900	7824	2425	9360	7398	2669	9000	7113	2780	8460	6686	2975	8100	6402	3086
	22	30	9180	6473	1732	11880	8394	2042	10980	7753	2425	10350	7327	2697	9990	7042	2808	9000	6829	3086	8370	6686	3253
	24	32	9810	6473	1758	12690	8394	2068	11700	7753	2452	11070	7327	2697	10620	7042	2836	9360	6971	3169	8550	6900	3364
5.0+5.0+5.0	12	18	7470	5548	1696	8460	7398	2014	7830	6829	2374	7380	6473	2622	7110	6188	2736	6660	5833	2936	6390	5548	3050
	14	20	7470	5548	1696	9090	7398	2014	8460	6900	2402	7920	6473	2651	7650	6260	2765	7110	5833	2964	6840	5619	3107
	16	22	7470	5904	1723	9720	7398	2041	9000	6900	2430	8460	6473	2679	8190	6260	2822	7650	5833	3021	7380	5619	3135
	18	25	8010	6331	1749	10350	8038	2067	9540	7469	2458	9000	7042	2708	8640	6758	2822	8100	6331	3050	7740	6046	3164
	19	27	8280	6544	1776	10710	8465	2094	9900	7824	2486	9360	7398	2736	9000	7113	2850	8460	6686	3050	8100	6402	3164
	22	30	9180	6473	1776	11880	8394	2094	10980	7753	2486	10350	7327	2765	9990	7042	2879	9000	6829	3164	8370	6686	3335
	24	32	9810	6473	1802	12690	8394	2120	11700	7753	2514	11070	7327	2765	10620	7042	2907	9360	6971	3249	8550	6900	3449
1.2+1.2+1.2+1.2	12	18	3984	2959	804	4512	3945	954	4176	3642	1125	3936	3452	1242	3792	3301	1296	3552	3111	1391	3408	2959	1445
	14	20	3984	2959	804	4848	3945	954	4512	3680	1138	4224	3452	1256	4080	3338	1310	3792	3111	1404	3648	2997	1472
	16	22	3984	3149	816	5184	3945	967	4800	3680	1151	4512	3452	1269	4368	3338	1337	4080	3111	1431	3936	2997	1485
	18	25	4272	3376	829	5520	4287	979	5088	3983	1164	4800	3756	1283	4608	3604	1337	4320	3376	1445	4128	3225	1499
	19	27	4416	3490	841	5712	4514	992	5280	4173	1177	4992	3945	1296	4800	3794	1350	4512	3566	1445	4320	3414	1499
	22	30	4896	3452	841	6336	4477	992	5856	4135	1177	5520	3908	1310	5328	3756	1364	4800	3642	1499	4464	3566	1580
	24	32	5232	3452	854	6768	4477	1004	6240	4135	1191	5904	3908	1310	5664	3756	1377	4992	3718	1539	4560	3680	1634

EWB : Evaporator Wet Bulb temperature (°C)
EDB : Evaporator Dry Bulb temperature (°C)
(°CDB) : Outdoor Unit Inlet Air Dry Temperature (°C)

TC : Total Capacity (W)
SHC : Sensible Heating Capacity (w)
PI : Power Input

	INDOOR		OUTDOOR TEMPERATURE (°CDB)																				
	EWB	EDB	-10			21			27			32			35			40			43		
	°C	°C	TC	SHC	PI	TC	SHC	PI	TC	SHC	PI	TC	SHC	PI	TC	SHC	PI	TC	SHC	PI	TC	SHC	PI
1.2+1.2+1.2+1.8	12	18	4482	3329	881	5076	4439	1046	4698	4097	1233	4428	3884	1362	4266	3713	1421	3996	3500	1524	3834	3329	1584
	14	20	4482	3329	881	5454	4439	1046	5076	4140	1247	4752	3884	1376	4590	3756	1436	4266	3500	1539	4104	3372	1613
	16	22	4482	3542	895	5832	4439	1060	5400	4140	1262	5076	3884	1391	4914	3756	1465	4590	3500	1569	4428	3372	1628
	18	25	4806	3798	908	6210	4823	1074	5724	4481	1276	5400	4225	1406	5184	4055	1465	4860	3798	1584	4644	3628	1643
	19	27	4968	3926	922	6426	5079	1087	5940	4695	1291	5616	4439	1421	5400	4268	1480	5076	4012	1584	4860	3841	1643
	22	30	5508	3884	922	7128	5036	1087	6588	4652	1291	6210	4396	1436	5994	4225	1495	5400	4097	1643	5022	4012	1732
	24	32	5886	3884	936	7614	5036	1101	7020	4652	1305	6642	4396	1436	6372	4225	1510	5616	4183	1687	5130	4140	1791
1.2+1.2+1.2+2.5	12	18	5063	3760	1059	5734	5014	1258	5307	4628	1483	5002	4387	1638	4819	4194	1709	4514	3953	1833	4331	3760	1905
	14	20	5063	3760	1059	6161	5014	1258	5734	4677	1500	5368	4387	1655	5185	4243	1727	4819	3953	1851	4636	3809	1940
	16	22	5063	4002	1076	6588	5014	1275	6100	4677	1518	5734	4387	1673	5551	4243	1762	5185	3953	1887	5002	3809	1958
	18	25	5429	4291	1093	7015	5448	1291	6466	5062	1535	6100	4773	1691	5856	4580	1762	5490	4291	1905	5246	4098	1976
	19	27	5612	4435	1109	7259	5737	1308	6710	5303	1553	6344	5014	1709	6100	4821	1780	5734	4532	1905	5490	4339	1976
	22	30	6222	4387	1109	8052	5689	1308	7442	5255	1553	7015	4966	1727	6771	4773	1798	6100	4628	1976	5673	4532	2083
	24	32	6649	4387	1126	8601	5689	1324	7930	5255	1570	7503	4966	1727	7198	4773	1816	6344	4725	2029	5795	4677	2154
1.2+1.2+1.2+3.5	12	18	5893	4377	1137	6674	5836	1350	6177	5387	1591	5822	5106	1757	5609	4882	1834	5254	4601	1967	5041	4377	2044
	14	20	5893	4377	1137	7171	5836	1350	6674	5443	1610	6248	5106	1776	6035	4938	1853	5609	4601	1986	5396	4433	2082
	16	22	5893	4658	1155	7668	5836	1368	7100	5443	1628	6674	5106	1795	6461	4938	1891	6035	4601	2025	5822	4433	2101
	18	25	6319	4994	1172	8165	6341	1386	7526	5892	1647	7100	5555	1815	6816	5331	1891	6390	4994	2044	6106	4770	2120
	19	27	6532	5163	1190	8449	6678	1403	7810	6173	1666	7384	5836	1834	7100	5612	1910	6674	5275	2044	6390	5050	2120
	22	30	7242	5106	1190	9372	6622	1403	8662	6117	1666	8165	5780	1853	7881	5555	1929	7100	5387	2120	6603	5275	2235
	24	32	7739	5106	1208	10011	6622	1421	9230	6117	1685	8733	5780	1853	8378	5555	1948	7384	5499	2177	6745	5443	2311
1.2+1.2+1.2+5	12	18	7055	5240	1595	7990	6987	1894	7395	6449	2232	6970	6113	2466	6715	5845	2573	6290	5509	2760	6035	5240	2868
	14	20	7055	5240	1595	8585	6987	1894	7990	6516	2259	7480	6113	2492	7225	5912	2600	6715	5509	2787	6460	5307	2921
	16	22	7055	5576	1620	9180	6987	1919	8500	6516	2285	7990	6113	2519	7735	5912	2653	7225	5509	2841	6970	5307	2948
	18	25	7565	5979	1645	9775	7591	1944	9010	7054	2311	8500	6651	2546	8160	6382	2653	7650	5979	2868	7310	5710	2975
	19	27	7820	6181	1670	10115	7994	1969	9350	7390	2337	8840	6987	2573	8500	6718	2680	7990	6315	2868	7650	6046	2975
	22	30	8670	6113	1670	11220	7927	1969	10370	7323	2337	9775	6920	2600	9435	6651	2707	8500	6449	2975	7905	6315	3136
	24	32	9265	6113	1695	11985	7927	1994	11050	7323	2364	10455	6920	2600	10030	6651	2734	8840	6584	3055	8075	6516	3243
1.2+1.2+1.8+1.8	12	18	4980	3699	1042	5640	4932	1237	5220	4552	1458	4920	4315	1610	4740	4126	1680	4440	3889	1803	4260	3699	1873
	14	20	4980	3699	1042	6060	4932	1237	5640	4600	1475	5280	4315	1628	5100	4173	1698	4740	3889	1820	4560	3746	1908
	16	22	4980	3936	1058	6480	4932	1253	6000	4600	1492	5640	4315	1645	5460	4173	1733	5100	3889	1855	4920	3746	1925
	18	25	5340	4220	1074	6900	5359	1269	6360	4979	1509	6000	4695	1663	5760	4505	1733	5400	4220	1873	5160	4031	1943
	19	27	5520	4363	1090	7140	5643	1286	6600	5216	1526	6240	4932	1680	6000	4742	1750	5640	4458	1873	5400	4268	1943
	22	30	6120	4315	1090	7920	5596	1286	7320	5169	1526	6900	4884	1698	6660	4695	1768	6000	4552	1943	5580	4458	2048
	24	32	6540	4315	1107	8460	5596	1302	7800	5169	1544	7380	4884	1698	7080	4695	1785	6240	4647	1995	5700	4600	2118
1.2+1.2+1.8+2.5	12	18	5561	4130	1101	6298	5507	1308	5829	5084	1541	5494	4819	1702	5293	4607	1776	4958	4342	1906	4757	4130	1980
	14	20	5561	4130	1101	6767	5507	1308	6298	5137	1559	5896	4819	1721	5695	4660	1795	5293	4342	1924	5092	4183	2017
	16	22	5561	4395	1118	7236	5507	1325	6700	5137	1577	6298	4819	1739	6097	4660	1832	5695	4342	1961	5494	4183	2035
	18	25	5963	4713	1136	7705	5984	1342	7102	5560	1595	6700	5242	1758	6432	5031	1832	6030	4713	1980	5762	4501	2054
	19	27	6164	4872	1153	7973	6301	1359	7370	5825	1614	6968	5507	1776	6700	5295	1850	6298	4978	1980	6030	4766	2054
	22	30	6834	4819	1153	8844	6249	1359	8174	5772	1614	7705	5454	1795	7437	5242	1869	6700	5084	2054	6231	4978	2165
	24	32	7303	4819	1170	9447	6249	1376	8710	5772	1632	8241	5454	1795	7906	5242	1887	6968	5189	2109	6365	5137	2239
1.2+1.2+1.8+3.5	12	18	6391	4747	1298	7238	6329	1541	6699	5842	1816	6314	5538	2006	6083	5295	2093	5698	4990	2245	5467	4747	2333
	14	20	6391	4747	1298	7777	6329	1541	7238	5903	1837	6776	5538	2027	6545	5355	2115	6083	4990	2267	5852	4808	2376
	16	22	6391	5051	1318	8316	6329	1561	7700	5903	1859	7238	5538	2049	7007	5355	2158	6545	4990	2311	6314	4808	2398
	18	25	6853	5416	1338	8855	6877	1581	8162	6390	1880	7700	6025	2071	7392	5781	2158	6930	5416	2333	6622	5173	2420
	19	27	7084	5599	1358	9163	7242	1602	8470	6694	1901	8008	6329	2093	7700	6086	2180	7238	5721	2333	6930	5477	2420
	22	30	7854	5538	1358	10164	7181	1602	9394	6633	1901	8855	6268	2115	8547	6025	2202	7700	5842	2420	7161	5721	2551
	24	32	8393	5538	1379	10857	7181	1622	10010	6633	1923	9471	6268	2115	9086	6025	2224	8008	5964	2485	7315	5903	2638

EWB : Evaporator Wet Bulb temperature (°C)
EDB : Evaporator Dry Bulb temperature (°C)
(°CDB) : Outdoor Unit Inlet Air Dry Temperature (°C)

TC : Total Capacity (W)
SHC : Sensible Heating Capacity (w)
PI : Power Input

	INDOOR		OUTDOOR TEMPERATURE (°CDB)																				
	EWB	EDB	-10			21			27			32			35			40			43		
	°C	°C	TC	SHC	PI	TC	SHC	PI	TC	SHC	PI	TC	SHC	PI	TC	SHC	PI	TC	SHC	PI	TC	SHC	PI
1.2+1.2+1.8+5	12	18	7055	5240	1631	7990	6987	1937	7395	6449	2282	6970	6113	2521	6715	5845	2630	6290	5509	2822	6035	5240	2932
	14	20	7055	5240	1631	8585	6987	1937	7990	6516	2309	7480	6113	2548	7225	5912	2658	6715	5509	2850	6460	5307	2987
	16	22	7055	5576	1656	9180	6987	1962	8500	6516	2336	7990	6113	2576	7735	5912	2713	7225	5509	2904	6970	5307	3014
	18	25	7565	5979	1682	9775	7591	1988	9010	7054	2363	8500	6651	2603	8160	6382	2713	7650	5979	2932	7310	5710	3041
	19	27	7820	6181	1707	10115	7994	2013	9350	7390	2390	8840	6987	2630	8500	6718	2740	7990	6315	2932	7650	6046	3041
	22	30	8670	6113	1707	11220	7927	2013	10370	7323	2390	9775	6920	2658	9435	6651	2767	8500	6449	3041	7905	6315	3206
	24	32	9265	6113	1733	11985	7927	2039	11050	7323	2417	10455	6920	2658	10030	6651	2795	8840	6584	3124	8075	6516	3315
1.2+1.2+2.5+2.5	12	18	6142	4562	1280	6956	6083	1520	6438	5615	1791	6068	5322	1978	5846	5088	2064	5476	4796	2215	5254	4562	2301
	14	20	6142	4562	1280	7474	6083	1520	6956	5673	1812	6512	5322	2000	6290	5147	2086	5846	4796	2236	5624	4620	2344
	16	22	6142	4854	1300	7992	6083	1540	7400	5673	1833	6956	5322	2021	6734	5147	2129	6290	4796	2279	6068	4620	2365
	18	25	6586	5205	1320	8510	6609	1560	7844	6141	1854	7400	5790	2043	7104	5556	2129	6660	5205	2301	6364	4971	2387
	19	27	6808	5381	1340	8806	6960	1580	8140	6433	1875	7696	6083	2064	7400	5849	2150	6956	5498	2301	6660	5264	2387
	22	30	7548	5322	1340	9768	6901	1580	9028	6375	1875	8510	6024	2086	8214	5790	2172	7400	5615	2387	6882	5498	2516
	24	32	8066	5322	1360	10434	6901	1600	9620	6375	1896	9102	6024	2086	8732	5790	2193	7696	5732	2451	7030	5673	2602
1.2+1.2+2.5+3.5	12	18	6972	5178	1518	7896	6905	1802	7308	6373	2124	6888	6041	2346	6636	5776	2448	6216	5444	2627	5964	5178	2729
	14	20	6972	5178	1518	8484	6905	1802	7896	6440	2149	7392	6041	2372	7140	5842	2474	6636	5444	2652	6384	5245	2780
	16	22	6972	5510	1541	9072	6905	1826	8400	6440	2174	7896	6041	2397	7644	5842	2525	7140	5444	2703	6888	5245	2805
	18	25	7476	5909	1565	9660	7502	1850	8904	6971	2199	8400	6573	2423	8064	6307	2525	7560	5909	2729	7224	5643	2831
	19	27	7728	6108	1589	9996	7900	1873	9240	7303	2224	8736	6905	2448	8400	6639	2550	7896	6241	2729	7560	5975	2831
	22	30	8568	6041	1589	11088	7834	1873	10248	7236	2224	9660	6838	2474	9324	6573	2576	8400	6373	2831	7812	6241	2984
	24	32	9156	6041	1613	11844	7834	1897	10920	7236	2249	10332	6838	2474	9912	6573	2601	8736	6506	2907	7980	6440	3086
1.2+1.2+2.5+5	12	18	7055	5240	1631	7990	6987	1937	7395	6449	2282	6970	6113	2521	6715	5845	2630	6290	5509	2822	6035	5240	2932
	14	20	7055	5240	1631	8585	6987	1937	7990	6516	2309	7480	6113	2548	7225	5912	2658	6715	5509	2850	6460	5307	2987
	16	22	7055	5576	1656	9180	6987	1962	8500	6516	2336	7990	6113	2576	7735	5912	2713	7225	5509	2904	6970	5307	3014
	18	25	7565	5979	1682	9775	7591	1988	9010	7054	2363	8500	6651	2603	8160	6382	2713	7650	5979	2932	7310	5710	3041
	19	27	7820	6181	1707	10115	7994	2013	9350	7390	2390	8840	6987	2630	8500	6718	2740	7990	6315	2932	7650	6046	3041
	22	30	8670	6113	1707	11220	7927	2013	10370	7323	2390	9775	6920	2658	9435	6651	2767	8500	6449	3041	7905	6315	3206
	24	32	9265	6113	1733	11985	7927	2039	11050	7323	2417	10455	6920	2658	10030	6651	2795	8840	6584	3124	8075	6516	3315
1.2+1.2+3.5+3.5	12	18	7055	5240	1631	7990	6987	1937	7395	6449	2282	6970	6113	2521	6715	5845	2630	6290	5509	2822	6035	5240	2932
	14	20	7055	5240	1631	8585	6987	1937	7990	6516	2309	7480	6113	2548	7225	5912	2658	6715	5509	2850	6460	5307	2987
	16	22	7055	5576	1656	9180	6987	1962	8500	6516	2336	7990	6113	2576	7735	5912	2713	7225	5509	2904	6970	5307	3014
	18	25	7565	5979	1682	9775	7591	1988	9010	7054	2363	8500	6651	2603	8160	6382	2713	7650	5979	2932	7310	5710	3041
	19	27	7820	6181	1707	10115	7994	2013	9350	7390	2390	8840	6987	2630	8500	6718	2740	7990	6315	2932	7650	6046	3041
	22	30	8670	6113	1707	11220	7927	2013	10370	7323	2390	9775	6920	2658	9435	6651	2767	8500	6449	3041	7905	6315	3206
	24	32	9265	6113	1733	11985	7927	2039	11050	7323	2417	10455	6920	2658	10030	6651	2795	8840	6584	3124	8075	6516	3315
1.2+1.2+3.5+5	12	18	7055	5240	1631	7990	6987	1937	7395	6449	2282	6970	6113	2521	6715	5845	2630	6290	5509	2822	6035	5240	2932
	14	20	7055	5240	1631	8585	6987	1937	7990	6516	2309	7480	6113	2548	7225	5912	2658	6715	5509	2850	6460	5307	2987
	16	22	7055	5576	1656	9180	6987	1962	8500	6516	2336	7990	6113	2576	7735	5912	2713	7225	5509	2904	6970	5307	3014
	18	25	7565	5979	1682	9775	7591	1988	9010	7054	2363	8500	6651	2603	8160	6382	2713	7650	5979	2932	7310	5710	3041
	19	27	7820	6181	1707	10115	7994	2013	9350	7390	2390	8840	6987	2630	8500	6718	2740	7990	6315	2932	7650	6046	3041
	22	30	8670	6113	1707	11220	7927	2013	10370	7323	2390	9775	6920	2658	9435	6651	2767	8500	6449	3041	7905	6315	3206
	24	32	9265	6113	1733	11985	7927	2039	11050	7323	2417	10455	6920	2658	10030	6651	2795	8840	6584	3124	8075	6516	3315
1.2+1.2+5+5	12	18	7055	5240	1631	7990	6987	1937	7395	6449	2282	6970	6113	2521	6715	5845	2630	6290	5509	2822	6035	5240	2932
	14	20	7055	5240	1631	8585	6987	1937	7990	6516	2309	7480	6113	2548	7225	5912	2658	6715	5509	2850	6460	5307	2987
	16	22	7055	5576	1656	9180	6987	1962	8500	6516	2336	7990	6113	2576	7735	5912	2713	7225	5509	2904	6970	5307	3014
	18	25	7565	5979	1682	9775	7591	1988	9010	7054	2363	8500	6651	2603	8160	6382	2713	7650	5979	2932	7310	5710	3041
	19	27	7820	6181	1707	10115	7994	2013	9350	7390	2390	8840	6987	2630	8500	6718	2740	7990	6315	2932	7650	6046	3041
	22	30	8670	6113	1707	11220	7927	2013	10370	7323	2390	9775	6920	2658	9435	6651	2767	8500	6449	3041	7905	6315	3206
	24	32	9265	6113	1733	11985	7927	2039	11050	7323	2417	10455	6920	2658	10030	6651	2795	8840	6584	3124	8075	6516	3315

EWB : Evaporator Wet Bulb temperature (°C)
EDB : Evaporator Dry Bulb temperature (°C)
(°CDB) : Outdoor Unit Inlet Air Dry Temperature (°C)

TC : Total Capacity (W)
SHC : Sensible Heating Capacity (w)
PI : Power Input

	INDOOR		OUTDOOR TEMPERATURE (°CDB)																				
	EWB	EDB	-10			21			27			32			35			40			43		
	°C	°C	TC	SHC	PI	TC	SHC	PI	TC	SHC	PI	TC	SHC	PI	TC	SHC	PI	TC	SHC	PI	TC	SHC	PI
1.2+1.8+1.8+1.8	12	18	5478	4069	1113	6204	5425	1322	5742	5008	1558	5412	4747	1720	5214	4538	1795	4884	4277	1926	4686	4069	2001
	14	20	5478	4069	1113	6666	5425	1322	6204	5060	1576	5808	4747	1739	5610	4590	1814	5214	4277	1945	5016	4121	2038
	16	22	5478	4330	1130	7128	5425	1339	6600	5060	1594	6204	4747	1758	6006	4590	1851	5610	4277	1982	5412	4121	2057
	18	25	5874	4643	1148	7590	5894	1356	6996	5477	1613	6600	5164	1777	6336	4956	1851	5940	4643	2001	5676	4434	2076
	19	27	6072	4799	1165	7854	6207	1374	7260	5738	1631	6864	5425	1795	6600	5216	1870	6204	4903	2001	5940	4695	2076
	22	30	6732	4747	1165	8712	6155	1374	8052	5686	1631	7590	5373	1814	7326	5164	1889	6600	5008	2076	6138	4903	2188
	24	32	7194	4747	1183	9306	6155	1391	8580	5686	1649	8118	5373	1814	7788	5164	1907	6864	5112	2132	6270	5060	2263
1.2+1.8+1.8+2.5	12	18	6059	4500	1274	6862	6000	1513	6351	5539	1783	5986	5250	1969	5767	5020	2054	5402	4731	2204	5183	4500	2290
	14	20	6059	4500	1274	7373	6000	1513	6862	5596	1804	6424	5250	1990	6205	5077	2076	5767	4731	2226	5548	4558	2333
	16	22	6059	4789	1294	7884	6000	1532	7300	5596	1825	6862	5250	2012	6643	5077	2119	6205	4731	2268	5986	4558	2354
	18	25	6497	5135	1314	8395	6520	1552	7738	6058	1846	7300	5712	2033	7008	5481	2119	6570	5135	2290	6278	4904	2375
	19	27	6716	5308	1333	8687	6866	1572	8030	6347	1867	7592	6000	2054	7300	5770	2140	6862	5423	2290	6570	5193	2375
	22	30	7446	5250	1333	9636	6808	1572	8906	6289	1867	8395	5943	2076	8103	5712	2161	7300	5539	2375	6789	5423	2504
	24	32	7957	5250	1353	10293	6808	1592	9490	6289	1887	8979	5943	2076	8614	5712	2183	7592	5654	2440	6935	5596	2589
1.2+1.8+1.8+3.5	12	18	6889	5117	1518	7802	6822	1802	7221	6298	2124	6806	5970	2346	6557	5707	2448	6142	5379	2627	5893	5117	2729
	14	20	6889	5117	1518	8383	6822	1802	7802	6363	2149	7304	5970	2372	7055	5773	2474	6557	5379	2652	6308	5182	2780
	16	22	6889	5445	1541	8964	6822	1826	8300	6363	2174	7802	5970	2397	7553	5773	2525	7055	5379	2703	6806	5182	2805
	18	25	7387	5838	1565	9545	7413	1850	8798	6888	2199	8300	6494	2423	7968	6232	2525	7470	5838	2729	7138	5576	2831
	19	27	7636	6035	1589	9877	7806	1873	9130	7216	2224	8632	6822	2448	8300	6560	2550	7802	6166	2729	7470	5904	2831
	22	30	8466	5970	1589	10956	7741	1873	10126	7150	2224	9545	6757	2474	9213	6494	2576	8300	6298	2831	7719	6166	2984
	24	32	9047	5970	1613	11703	7741	1897	10790	7150	2249	10209	6757	2474	9794	6494	2601	8632	6429	2907	7885	6363	3086
1.2+1.8+1.8+5	12	18	7055	5240	1631	7990	6987	1937	7395	6449	2282	6970	6113	2521	6715	5845	2630	6290	5509	2822	6035	5240	2932
	14	20	7055	5240	1631	8585	6987	1937	7990	6516	2309	7480	6113	2548	7225	5912	2658	6715	5509	2850	6460	5307	2987
	16	22	7055	5576	1656	9180	6987	1962	8500	6516	2336	7990	6113	2576	7735	5912	2713	7225	5509	2904	6970	5307	3014
	18	25	7565	5979	1682	9775	7591	1988	9010	7054	2363	8500	6651	2603	8160	6382	2713	7650	5979	2932	7310	5710	3041
	19	27	7820	6181	1707	10115	7994	2013	9350	7390	2390	8840	6987	2630	8500	6718	2740	7990	6315	2932	7650	6046	3041
	22	30	8670	6113	1707	11220	7927	2013	10370	7323	2390	9775	6920	2658	9435	6651	2767	8500	6449	3041	7905	6315	3206
	24	32	9265	6113	1733	11985	7927	2039	11050	7323	2417	10455	6920	2658	10030	6651	2795	8840	6584	3124	8075	6516	3315
1.2+1.8+2.5+2.5	12	18	6640	4932	1631	7520	6576	1937	6960	6070	2282	6560	5754	2521	6320	5501	2630	5920	5185	2822	5680	4932	2932
	14	20	6640	4932	1631	8080	6576	1937	7520	6133	2309	7040	5754	2548	6800	5564	2658	6320	5185	2850	6080	4995	2987
	16	22	6640	5248	1656	8640	6576	1962	8000	6133	2336	7520	5754	2576	7280	5564	2713	6800	5185	2904	6560	4995	3014
	18	25	7120	5627	1682	9200	7145	1988	8480	6639	2363	8000	6260	2603	7680	6007	2713	7200	5627	2932	6880	5374	3041
	19	27	7360	5817	1707	9520	7524	2013	8800	6955	2390	8320	6576	2630	8000	6323	2740	7520	5943	2932	7200	5691	3041
	22	30	8160	5754	1707	10560	7461	2013	9760	6892	2390	9200	6513	2658	8880	6260	2767	8000	6070	3041	7440	5943	3206
	24	32	8720	5754	1733	11280	7461	2039	10400	6892	2417	9840	6513	2658	9440	6260	2795	8320	6196	3124	7600	6133	3315
1.2+1.8+2.5+3.5	12	18	7055	5240	1631	7990	6987	1937	7395	6449	2282	6970	6113	2521	6715	5845	2630	6290	5509	2822	6035	5240	2932
	14	20	7055	5240	1631	8585	6987	1937	7990	6516	2309	7480	6113	2548	7225	5912	2658	6715	5509	2850	6460	5307	2987
	16	22	7055	5576	1656	9180	6987	1962	8500	6516	2336	7990	6113	2576	7735	5912	2713	7225	5509	2904	6970	5307	3014
	18	25	7565	5979	1682	9775	7591	1988	9010	7054	2363	8500	6651	2603	8160	6382	2713	7650	5979	2932	7310	5710	3041
	19	27	7820	6181	1707	10115	7994	2013	9350	7390	2390	8840	6987	2630	8500	6718	2740	7990	6315	2932	7650	6046	3041
	22	30	8670	6113	1707	11220	7927	2013	10370	7323	2390	9775	6920	2658	9435	6651	2767	8500	6449	3041	7905	6315	3206
	24	32	9265	6113	1733	11985	7927	2039	11050	7323	2417	10455	6920	2658	10030	6651	2795	8840	6584	3124	8075	6516	3315
1.2+1.8+2.5+5	12	18	7055	5240	1631	7990	6987	1937	7395	6449	2282	6970	6113	2521	6715	5845	2630	6290	5509	2822	6035	5240	2932
	14	20	7055	5240	1631	8585	6987	1937	7990	6516	2309	7480	6113	2548	7225	5912	2658	6715	5509	2850	6460	5307	2987
	16	22	7055	5576	1656	9180	6987	1962	8500	6516	2336	7990	6113	2576	7735	5912	2713	7225	5509	2904	6970	5307	3014
	18	25	7565	5979	1682	9775	7591	1988	9010	7054	2363	8500	6651	2603	8160	6382	2713	7650	5979	2932	7310	5710	3041
	19	27	7820	6181	1707	10115	7994	2013	9350	7390	2390	8840	6987	2630	8500	6718	2740	7990	6315	2932	7650	6046	3041
	22	30	8670	6113	1707	11220	7927	2013	10370	7323	2390	9775	6920	2658	9435	6651	2767	8500	6449	3041	7905	6315	3206
	24	32	9265	6113	1733	11985	7927	2039	11050	7323	2417	10455	6920	2658	10030	6651	2795	8840	6584	3124	8075	6516	3315

EWB : Evaporator Wet Bulb temperature (°C)
EDB : Evaporator Dry Bulb temperature (°C)
(°CDB) : Outdoor Unit Inlet Air Dry Temperature (°C)

TC : Total Capacity (W)
SHC : Sensible Heating Capacity (w)
PI : Power Input

	INDOOR		OUTDOOR TEMPERATURE (°CDB)																				
	EWB	EDB	-10			21			27			32			35			40			43		
	°C	°C	TC	SHC	PI	TC	SHC	PI	TC	SHC	PI	TC	SHC	PI	TC	SHC	PI	TC	SHC	PI	TC	SHC	PI
1.2+1.8+3.5+3.5	12	18	7055	5240	1631	7990	6987	1937	7395	6449	2282	6970	6113	2521	6715	5845	2630	6290	5509	2822	6035	5240	2932
	14	20	7055	5240	1631	8585	6987	1937	7990	6516	2309	7480	6113	2548	7225	5912	2658	6715	5509	2850	6460	5307	2987
	16	22	7055	5576	1656	9180	6987	1962	8500	6516	2336	7990	6113	2576	7735	5912	2713	7225	5509	2904	6970	5307	3014
	18	25	7565	5979	1682	9775	7591	1988	9010	7054	2363	8500	6651	2603	8160	6382	2713	7650	5979	2932	7310	5710	3041
	19	27	7820	6181	1707	10115	7994	2013	9350	7390	2390	8840	6987	2630	8500	6718	2740	7990	6315	2932	7650	6046	3041
	22	30	8670	6113	1707	11220	7927	2013	10370	7323	2390	9775	6920	2658	9435	6651	2767	8500	6449	3041	7905	6315	3206
	24	32	9265	6113	1733	11985	7927	2039	11050	7323	2417	10455	6920	2658	10030	6651	2795	8840	6584	3124	8075	6516	3315
1.2+1.8+3.5+5	12	18	7055	5240	1631	7990	6987	1937	7395	6449	2282	6970	6113	2521	6715	5845	2630	6290	5509	2822	6035	5240	2932
	14	20	7055	5240	1631	8585	6987	1937	7990	6516	2309	7480	6113	2548	7225	5912	2658	6715	5509	2850	6460	5307	2987
	16	22	7055	5576	1656	9180	6987	1962	8500	6516	2336	7990	6113	2576	7735	5912	2713	7225	5509	2904	6970	5307	3014
	18	25	7565	5979	1682	9775	7591	1988	9010	7054	2363	8500	6651	2603	8160	6382	2713	7650	5979	2932	7310	5710	3041
	19	27	7820	6181	1707	10115	7994	2013	9350	7390	2390	8840	6987	2630	8500	6718	2740	7990	6315	2932	7650	6046	3041
	22	30	8670	6113	1707	11220	7927	2013	10370	7323	2390	9775	6920	2658	9435	6651	2767	8500	6449	3041	7905	6315	3206
	24	32	9265	6113	1733	11985	7927	2039	11050	7323	2417	10455	6920	2658	10030	6651	2795	8840	6584	3124	8075	6516	3315
1.2+1.8+5+5	12	18	7055	5240	1631	7990	6987	1937	7395	6449	2282	6970	6113	2521	6715	5845	2630	6290	5509	2822	6035	5240	2932
	14	20	7055	5240	1631	8585	6987	1937	7990	6516	2309	7480	6113	2548	7225	5912	2658	6715	5509	2850	6460	5307	2987
	16	22	7055	5576	1656	9180	6987	1962	8500	6516	2336	7990	6113	2576	7735	5912	2713	7225	5509	2904	6970	5307	3014
	18	25	7565	5979	1682	9775	7591	1988	9010	7054	2363	8500	6651	2603	8160	6382	2713	7650	5979	2932	7310	5710	3041
	19	27	7820	6181	1707	10115	7994	2013	9350	7390	2390	8840	6987	2630	8500	6718	2740	7990	6315	2932	7650	6046	3041
	22	30	8670	6113	1707	11220	7927	2013	10370	7323	2390	9775	6920	2658	9435	6651	2767	8500	6449	3041	7905	6315	3206
	24	32	9265	6113	1733	11985	7927	2039	11050	7323	2417	10455	6920	2658	10030	6651	2795	8840	6584	3124	8075	6516	3315
1.2+2.5+2.5+2.5	12	18	7055	5240	1589	7990	6987	1887	7395	6449	2224	6970	6113	2456	6715	5845	2563	6290	5509	2750	6035	5240	2857
	14	20	7055	5240	1589	8585	6987	1887	7990	6516	2250	7480	6113	2483	7225	5912	2590	6715	5509	2777	6460	5307	2910
	16	22	7055	5576	1614	9180	6987	1912	8500	6516	2276	7990	6113	2510	7735	5912	2643	7225	5509	2830	6970	5307	2937
	18	25	7565	5979	1639	9775	7591	1937	9010	7054	2303	8500	6651	2537	8160	6382	2643	7650	5979	2857	7310	5710	2964
	19	27	7820	6181	1664	10115	7994	1962	9350	7390	2329	8840	6987	2563	8500	6718	2670	7990	6315	2857	7650	6046	2964
	22	30	8670	6113	1664	11220	7927	1962	10370	7323	2329	9775	6920	2590	9435	6651	2697	8500	6449	2964	7905	6315	3124
	24	32	9265	6113	1689	11985	7927	1986	11050	7323	2355	10455	6920	2590	10030	6651	2723	8840	6584	3044	8075	6516	3231
1.2+2.5+2.5+3.5	12	18	7055	5240	1631	7990	6987	1937	7395	6449	2282	6970	6113	2521	6715	5845	2630	6290	5509	2822	6035	5240	2932
	14	20	7055	5240	1631	8585	6987	1937	7990	6516	2309	7480	6113	2548	7225	5912	2658	6715	5509	2850	6460	5307	2987
	16	22	7055	5576	1656	9180	6987	1962	8500	6516	2336	7990	6113	2576	7735	5912	2713	7225	5509	2904	6970	5307	3014
	18	25	7565	5979	1682	9775	7591	1988	9010	7054	2363	8500	6651	2603	8160	6382	2713	7650	5979	2932	7310	5710	3041
	19	27	7820	6181	1707	10115	7994	2013	9350	7390	2390	8840	6987	2630	8500	6718	2740	7990	6315	2932	7650	6046	3041
	22	30	8670	6113	1707	11220	7927	2013	10370	7323	2390	9775	6920	2658	9435	6651	2767	8500	6449	3041	7905	6315	3206
	24	32	9265	6113	1733	11985	7927	2039	11050	7323	2417	10455	6920	2658	10030	6651	2795	8840	6584	3124	8075	6516	3315
1.2+2.5+2.5+5	12	18	7055	5240	1631	7990	6987	1937	7395	6449	2282	6970	6113	2521	6715	5845	2630	6290	5509	2822	6035	5240	2932
	14	20	7055	5240	1631	8585	6987	1937	7990	6516	2309	7480	6113	2548	7225	5912	2658	6715	5509	2850	6460	5307	2987
	16	22	7055	5576	1656	9180	6987	1962	8500	6516	2336	7990	6113	2576	7735	5912	2713	7225	5509	2904	6970	5307	3014
	18	25	7565	5979	1682	9775	7591	1988	9010	7054	2363	8500	6651	2603	8160	6382	2713	7650	5979	2932	7310	5710	3041
	19	27	7820	6181	1707	10115	7994	2013	9350	7390	2390	8840	6987	2630	8500	6718	2740	7990	6315	2932	7650	6046	3041
	22	30	8670	6113	1707	11220	7927	2013	10370	7323	2390	9775	6920	2658	9435	6651	2767	8500	6449	3041	7905	6315	3206
	24	32	9265	6113	1733	11985	7927	2039	11050	7323	2417	10455	6920	2658	10030	6651	2795	8840	6584	3124	8075	6516	3315
1.2+2.5+3.5+3.5	12	18	7055	5240	1631	7990	6987	1937	7395	6449	2282	6970	6113	2521	6715	5845	2630	6290	5509	2822	6035	5240	2932
	14	20	7055	5240	1631	8585	6987	1937	7990	6516	2309	7480	6113	2548	7225	5912	2658	6715	5509	2850	6460	5307	2987
	16	22	7055	5576	1656	9180	6987	1962	8500	6516	2336	7990	6113	2576	7735	5912	2713	7225	5509	2904	6970	5307	3014
	18	25	7565	5979	1682	9775	7591	1988	9010	7054	2363	8500	6651	2603	8160	6382	2713	7650	5979	2932	7310	5710	3041
	19	27	7820	6181	1707	10115	7994	2013	9350	7390	2390	8840	6987	2630	8500	6718	2740	7990	6315	2932	7650	6046	3041
	22	30	8670	6113	1707	11220	7927	2013	10370	7323	2390	9775	6920	2658	9435	6651	2767	8500	6449	3041	7905	6315	3206
	24	32	9265	6113	1733	11985	7927	2039	11050	7323	2417	10455	6920	2658	10030	6651	2795	8840	6584	3124	8075	6516	3315

EWB : Evaporator Wet Bulb temperature (°C)
EDB : Evaporator Dry Bulb temperature (°C)
(°CDB) : Outdoor Unit Inlet Air Dry Temperature (°C)

TC : Total Capacity (W)
SHC : Sensible Heating Capacity (w)
PI : Power Input

	INDOOR		OUTDOOR TEMPERATURE (°CDB)																				
	EWB	EDB	-10			21			27			32			35			40			43		
	°C	°C	TC	SHC	PI	TC	SHC	PI	TC	SHC	PI	TC	SHC	PI	TC	SHC	PI	TC	SHC	PI	TC	SHC	PI
1.2+2.5+3.5+5	12	18	7055	5240	1631	7990	6987	1937	7395	6449	2282	6970	6113	2521	6715	5845	2630	6290	5509	2822	6035	5240	2932
	14	20	7055	5240	1631	8585	6987	1937	7990	6516	2309	7480	6113	2548	7225	5912	2658	6715	5509	2850	6460	5307	2987
	16	22	7055	5576	1656	9180	6987	1962	8500	6516	2336	7990	6113	2576	7735	5912	2713	7225	5509	2904	6970	5307	3014
	18	25	7565	5979	1682	9775	7591	1988	9010	7054	2363	8500	6651	2603	8160	6382	2713	7650	5979	2932	7310	5710	3041
	19	27	7820	6181	1707	10115	7994	2013	9350	7390	2390	8840	6987	2630	8500	6718	2740	7990	6315	2932	7650	6046	3041
	22	30	8670	6113	1707	11220	7927	2013	10370	7323	2390	9775	6920	2658	9435	6651	2767	8500	6449	3041	7905	6315	3206
	24	32	9265	6113	1733	11985	7927	2039	11050	7323	2417	10455	6920	2658	10030	6651	2795	8840	6584	3124	8075	6516	3315
1.2+2.5+5+5	12	18	7055	5240	1631	7990	6987	1937	7395	6449	2282	6970	6113	2521	6715	5845	2630	6290	5509	2822	6035	5240	2932
	14	20	7055	5240	1631	8585	6987	1937	7990	6516	2309	7480	6113	2548	7225	5912	2658	6715	5509	2850	6460	5307	2987
	16	22	7055	5576	1656	9180	6987	1962	8500	6516	2336	7990	6113	2576	7735	5912	2713	7225	5509	2904	6970	5307	3014
	18	25	7565	5979	1682	9775	7591	1988	9010	7054	2363	8500	6651	2603	8160	6382	2713	7650	5979	2932	7310	5710	3041
	19	27	7820	6181	1707	10115	7994	2013	9350	7390	2390	8840	6987	2630	8500	6718	2740	7990	6315	2932	7650	6046	3041
	22	30	8670	6113	1707	11220	7927	2013	10370	7323	2390	9775	6920	2658	9435	6651	2767	8500	6449	3041	7905	6315	3206
	24	32	9265	6113	1733	11985	7927	2039	11050	7323	2417	10455	6920	2658	10030	6651	2795	8840	6584	3124	8075	6516	3315
1.2+3.5+3.5+3.5	12	18	7055	5240	1631	7990	6987	1937	7395	6449	2282	6970	6113	2521	6715	5845	2630	6290	5509	2822	6035	5240	2932
	14	20	7055	5240	1631	8585	6987	1937	7990	6516	2309	7480	6113	2548	7225	5912	2658	6715	5509	2850	6460	5307	2987
	16	22	7055	5576	1656	9180	6987	1962	8500	6516	2336	7990	6113	2576	7735	5912	2713	7225	5509	2904	6970	5307	3014
	18	25	7565	5979	1682	9775	7591	1988	9010	7054	2363	8500	6651	2603	8160	6382	2713	7650	5979	2932	7310	5710	3041
	19	27	7820	6181	1707	10115	7994	2013	9350	7390	2390	8840	6987	2630	8500	6718	2740	7990	6315	2932	7650	6046	3041
	22	30	8670	6113	1707	11220	7927	2013	10370	7323	2390	9775	6920	2658	9435	6651	2767	8500	6449	3041	7905	6315	3206
	24	32	9265	6113	1733	11985	7927	2039	11050	7323	2417	10455	6920	2658	10030	6651	2795	8840	6584	3124	8075	6516	3315
1.2+3.5+3.5+5	12	18	7055	5240	1631	7990	6987	1937	7395	6449	2282	6970	6113	2521	6715	5845	2630	6290	5509	2822	6035	5240	2932
	14	20	7055	5240	1631	8585	6987	1937	7990	6516	2309	7480	6113	2548	7225	5912	2658	6715	5509	2850	6460	5307	2987
	16	22	7055	5576	1656	9180	6987	1962	8500	6516	2336	7990	6113	2576	7735	5912	2713	7225	5509	2904	6970	5307	3014
	18	25	7565	5979	1682	9775	7591	1988	9010	7054	2363	8500	6651	2603	8160	6382	2713	7650	5979	2932	7310	5710	3041
	19	27	7820	6181	1707	10115	7994	2013	9350	7390	2390	8840	6987	2630	8500	6718	2740	7990	6315	2932	7650	6046	3041
	22	30	8670	6113	1707	11220	7927	2013	10370	7323	2390	9775	6920	2658	9435	6651	2767	8500	6449	3041	7905	6315	3206
	24	32	9265	6113	1733	11985	7927	2039	11050	7323	2417	10455	6920	2658	10030	6651	2795	8840	6584	3124	8075	6516	3315
1.2+3.5+5+5	12	18	7055	5240	1631	7990	6987	1937	7395	6449	2282	6970	6113	2521	6715	5845	2630	6290	5509	2822	6035	5240	2932
	14	20	7055	5240	1631	8585	6987	1937	7990	6516	2309	7480	6113	2548	7225	5912	2658	6715	5509	2850	6460	5307	2987
	16	22	7055	5576	1656	9180	6987	1962	8500	6516	2336	7990	6113	2576	7735	5912	2713	7225	5509	2904	6970	5307	3014
	18	25	7565	5979	1682	9775	7591	1988	9010	7054	2363	8500	6651	2603	8160	6382	2713	7650	5979	2932	7310	5710	3041
	19	27	7820	6181	1707	10115	7994	2013	9350	7390	2390	8840	6987	2630	8500	6718	2740	7990	6315	2932	7650	6046	3041
	22	30	8670	6113	1707	11220	7927	2013	10370	7323	2390	9775	6920	2658	9435	6651	2767	8500	6449	3041	7905	6315	3206
	24	32	9265	6113	1733	11985	7927	2039	11050	7323	2417	10455	6920	2658	10030	6651	2795	8840	6584	3124	8075	6516	3315
1.8+1.8+1.8+1.8	12	18	5976	4439	1071	6768	5918	1272	6264	5463	1499	5904	5178	1656	5688	4951	1728	5328	4666	1854	5112	4439	1926
	14	20	5976	4439	1071	7272	5918	1272	6768	5520	1517	6336	5178	1674	6120	5008	1746	5688	4666	1872	5472	4496	1962
	16	22	5976	4723	1088	7776	5918	1289	7200	5520	1535	6768	5178	1692	6552	5008	1782	6120	4666	1908	5904	4496	1980
	18	25	6408	5065	1105	8280	6430	1306	7632	5975	1552	7200	5634	1710	6912	5406	1782	6480	5065	1926	6192	4837	1998
	19	27	6624	5235	1122	8568	6772	1322	7920	6260	1570	7488	5918	1728	7200	5691	1800	6768	5349	1926	6480	5121	1998
	22	30	7344	5178	1122	9504	6715	1322	8784	6203	1570	8280	5861	1746	7992	5634	1818	7200	5463	1998	6696	5349	2106
	24	32	7848	5178	1138	10152	6715	1339	9360	6203	1588	8856	5861	1746	8496	5634	1836	7488	5577	2052	6840	5520	2178
1.8+1.8+1.8+2.5	12	18	6557	4870	1244	7426	6494	1477	6873	5994	1741	6478	5682	1923	6241	5432	2006	5846	5120	2153	5609	4870	2236
	14	20	6557	4870	1244	7979	6494	1477	7426	6056	1761	6952	5682	1944	6715	5495	2027	6241	5120	2174	6004	4933	2278
	16	22	6557	5182	1263	8532	6494	1497	7900	6056	1782	7426	5682	1965	7189	5495	2069	6715	5120	2215	6478	4933	2299
	18	25	7031	5557	1283	9085	7055	1516	8374	6556	1802	7900	6181	1986	7584	5932	2069	7110	5557	2236	6794	5307	2320
	19	27	7268	5744	1302	9401	7430	1536	8690	6868	1823	8216	6494	2006	7900	6244	2090	7426	5869	2236	7110	5619	2320
	22	30	8058	5682	1302	10428	7368	1536	9638	6806	1823	9085	6431	2027	8769	6181	2111	7900	5994	2320	7347	5869	2445
	24	32	8611	5682	1322	11139	7368	1555	10270	6806	1843	9717	6431	2027	9322	6181	2132	8216	6119	2383	7505	6056	2529

EWB : Evaporator Wet Bulb temperature (°C)
EDB : Evaporator Dry Bulb temperature (°C)
(°CDB) : Outdoor Unit Inlet Air Dry Temperature (°C)

TC : Total Capacity (W)
SHC : Sensible Heating Capacity (w)
PI : Power Input

	INDOOR		OUTDOOR TEMPERATURE (°CDB)																				
	EWB	EDB	-10			21			27			32			35			40			43		
	°C	°C	TC	SHC	PI	TC	SHC	PI	TC	SHC	PI	TC	SHC	PI	TC	SHC	PI	TC	SHC	PI	TC	SHC	PI
1.8+1.8+1.8+3.5	12	18	7055	5240	1437	7990	6987	1707	7395	6449	2012	6970	6113	2222	6715	5845	2318	6290	5509	2487	6035	5240	2584
	14	20	7055	5240	1437	8585	6987	1707	7990	6516	2035	7480	6113	2246	7225	5912	2343	6715	5509	2512	6460	5307	2632
	16	22	7055	5576	1460	9180	6987	1729	8500	6516	2059	7990	6113	2270	7735	5912	2391	7225	5509	2560	6970	5307	2657
	18	25	7565	5979	1482	9775	7591	1752	9010	7054	2083	8500	6651	2294	8160	6382	2391	7650	5979	2584	7310	5710	2681
	19	27	7820	6181	1505	10115	7994	1774	9350	7390	2106	8840	6987	2318	8500	6718	2415	7990	6315	2584	7650	6046	2681
	22	30	8670	6113	1505	11220	7927	1774	10370	7323	2106	9775	6920	2343	9435	6651	2439	8500	6449	2681	7905	6315	2826
	24	32	9265	6113	1527	11985	7927	1797	11050	7323	2130	10455	6920	2343	10030	6651	2463	8840	6584	2753	8075	6516	2922
1.8+1.8+1.8+5.0	12	18	7055	5240	1423	7990	6987	1689	7395	6449	1991	6970	6113	2199	6715	5845	2294	6290	5509	2462	6035	5240	2557
	14	20	7055	5240	1423	8585	6987	1689	7990	6516	2014	7480	6113	2223	7225	5912	2318	6715	5509	2486	6460	5307	2605
	16	22	7055	5576	1445	9180	6987	1711	8500	6516	2038	7990	6113	2247	7735	5912	2366	7225	5509	2533	6970	5307	2629
	18	25	7565	5979	1467	9775	7591	1734	9010	7054	2061	8500	6651	2271	8160	6382	2366	7650	5979	2557	7310	5710	2653
	19	27	7820	6181	1489	10115	7994	1756	9350	7390	2085	8840	6987	2294	8500	6718	2390	7990	6315	2557	7650	6046	2653
	22	30	8670	6113	1489	11220	7927	1756	10370	7323	2085	9775	6920	2318	9435	6651	2414	8500	6449	2653	7905	6315	2796
	24	32	9265	6113	1511	11985	7927	1778	11050	7323	2108	10455	6920	2318	10030	6651	2438	8840	6584	2725	8075	6516	2892
1.8+1.8+2.5+2.5	12	18	7055	5240	1381	7990	6987	1640	7395	6449	1933	6970	6113	2134	6715	5845	2227	6290	5509	2390	6035	5240	2482
	14	20	7055	5240	1381	8585	6987	1640	7990	6516	1955	7480	6113	2158	7225	5912	2250	6715	5509	2413	6460	5307	2529
	16	22	7055	5576	1402	9180	6987	1661	8500	6516	1978	7990	6113	2181	7735	5912	2297	7225	5509	2459	6970	5307	2552
	18	25	7565	5979	1424	9775	7591	1683	9010	7054	2001	8500	6651	2204	8160	6382	2297	7650	5979	2482	7310	5710	2575
	19	27	7820	6181	1446	10115	7994	1705	9350	7390	2024	8840	6987	2227	8500	6718	2320	7990	6315	2482	7650	6046	2575
	22	30	8670	6113	1446	11220	7927	1705	10370	7323	2024	9775	6920	2250	9435	6651	2343	8500	6449	2575	7905	6315	2714
	24	32	9265	6113	1467	11985	7927	1726	11050	7323	2046	10455	6920	2250	10030	6651	2366	8840	6584	2645	8075	6516	2807
1.8+1.8+2.5+3.5	12	18	7055	5240	1423	7990	6987	1689	7395	6449	1991	6970	6113	2199	6715	5845	2294	6290	5509	2462	6035	5240	2557
	14	20	7055	5240	1423	8585	6987	1689	7990	6516	2014	7480	6113	2223	7225	5912	2318	6715	5509	2486	6460	5307	2605
	16	22	7055	5576	1445	9180	6987	1711	8500	6516	2038	7990	6113	2247	7735	5912	2366	7225	5509	2533	6970	5307	2629
	18	25	7565	5979	1467	9775	7591	1734	9010	7054	2061	8500	6651	2271	8160	6382	2366	7650	5979	2557	7310	5710	2653
	19	27	7820	6181	1489	10115	7994	1756	9350	7390	2085	8840	6987	2294	8500	6718	2390	7990	6315	2557	7650	6046	2653
	22	30	8670	6113	1489	11220	7927	1756	10370	7323	2085	9775	6920	2318	9435	6651	2414	8500	6449	2653	7905	6315	2796
	24	32	9265	6113	1511	11985	7927	1778	11050	7323	2108	10455	6920	2318	10030	6651	2438	8840	6584	2725	8075	6516	2892
1.8+1.8+2.5+5.0	12	18	7055	5240	1423	7990	6987	1689	7395	6449	1991	6970	6113	2199	6715	5845	2294	6290	5509	2462	6035	5240	2557
	14	20	7055	5240	1423	8585	6987	1689	7990	6516	2014	7480	6113	2223	7225	5912	2318	6715	5509	2486	6460	5307	2605
	16	22	7055	5576	1445	9180	6987	1711	8500	6516	2038	7990	6113	2247	7735	5912	2366	7225	5509	2533	6970	5307	2629
	18	25	7565	5979	1467	9775	7591	1734	9010	7054	2061	8500	6651	2271	8160	6382	2366	7650	5979	2557	7310	5710	2653
	19	27	7820	6181	1489	10115	7994	1756	9350	7390	2085	8840	6987	2294	8500	6718	2390	7990	6315	2557	7650	6046	2653
	22	30	8670	6113	1489	11220	7927	1756	10370	7323	2085	9775	6920	2318	9435	6651	2414	8500	6449	2653	7905	6315	2796
	24	32	9265	6113	1511	11985	7927	1778	11050	7323	2108	10455	6920	2318	10030	6651	2438	8840	6584	2725	8075	6516	2892
1.8+1.8+3.5+3.5	12	18	7055	5240	1423	7990	6987	1689	7395	6449	1991	6970	6113	2199	6715	5845	2294	6290	5509	2462	6035	5240	2557
	14	20	7055	5240	1423	8585	6987	1689	7990	6516	2014	7480	6113	2223	7225	5912	2318	6715	5509	2486	6460	5307	2605
	16	22	7055	5576	1445	9180	6987	1711	8500	6516	2038	7990	6113	2247	7735	5912	2366	7225	5509	2533	6970	5307	2629
	18	25	7565	5979	1467	9775	7591	1734	9010	7054	2061	8500	6651	2271	8160	6382	2366	7650	5979	2557	7310	5710	2653
	19	27	7820	6181	1489	10115	7994	1756	9350	7390	2085	8840	6987	2294	8500	6718	2390	7990	6315	2557	7650	6046	2653
	22	30	8670	6113	1489	11220	7927	1756	10370	7323	2085	9775	6920	2318	9435	6651	2414	8500	6449	2653	7905	6315	2796
	24	32	9265	6113	1511	11985	7927	1778	11050	7323	2108	10455	6920	2318	10030	6651	2438	8840	6584	2725	8075	6516	2892
1.8+1.8+3.5+5.0	12	18	7055	5240	1423	7990	6987	1689	7395	6449	1991	6970	6113	2199	6715	5845	2294	6290	5509	2462	6035	5240	2557
	14	20	7055	5240	1423	8585	6987	1689	7990	6516	2014	7480	6113	2223	7225	5912	2318	6715	5509	2486	6460	5307	2605
	16	22	7055	5576	1445	9180	6987	1711	8500	6516	2038	7990	6113	2247	7735	5912	2366	7225	5509	2533	6970	5307	2629
	18	25	7565	5979	1467	9775	7591	1734	9010	7054	2061	8500	6651	2271	8160	6382	2366	7650	5979	2557	7310	5710	2653
	19	27	7820	6181	1489	10115	7994	1756	9350	7390	2085	8840	6987	2294	8500	6718	2390	7990	6315	2557	7650	6046	2653
	22	30	8670	6113	1489	11220	7927	1756	10370	7323	2085	9775	6920	2318	9435	6651	2414	8500	6449	2653	7905	6315	2796
	24	32	9265	6113	1511	11985	7927	1778	11050	7323	2108	10455	6920	2318	10030	6651	2438	8840	6584	2725	8075	6516	2892

EWB : Evaporator Wet Bulb temperature (°C)
EDB : Evaporator Dry Bulb temperature (°C)
(°CDB) : Outdoor Unit Inlet Air Dry Temperature (°C)

TC : Total Capacity (W)
SHC : Sensible Heating Capacity (w)
PI : Power Input

	INDOOR		OUTDOOR TEMPERATURE (°CDB)																				
	EWB	EDB	-10			21			27			32			35			40			43		
	°C	°C	TC	SHC	PI	TC	SHC	PI	TC	SHC	PI	TC	SHC	PI	TC	SHC	PI	TC	SHC	PI	TC	SHC	PI
1.8+1.8+5.0+5.0	12	18	7055	5240	1411	7990	6987	1675	7395	6449	1974	6970	6113	2180	6715	5845	2275	6290	5509	2441	6035	5240	2536
	14	20	7055	5240	1411	8585	6987	1675	7990	6516	1997	7480	6113	2204	7225	5912	2299	6715	5509	2465	6460	5307	2583
	16	22	7055	5576	1433	9180	6987	1697	8500	6516	2021	7990	6113	2228	7735	5912	2346	7225	5509	2512	6970	5307	2607
	18	25	7565	5979	1455	9775	7591	1719	9010	7054	2044	8500	6651	2252	8160	6382	2346	7650	5979	2536	7310	5710	2631
	19	27	7820	6181	1477	10115	7994	1741	9350	7390	2067	8840	6987	2275	8500	6718	2370	7990	6315	2536	7650	6046	2631
	22	30	8670	6113	1477	11220	7927	1741	10370	7323	2067	9775	6920	2299	9435	6651	2394	8500	6449	2631	7905	6315	2773
	24	32	9265	6113	1499	11985	7927	1763	11050	7323	2090	10455	6920	2299	10030	6651	2417	8840	6584	2702	8075	6516	2868
1.8+2.5+2.5+2.5	12	18	7055	5240	1423	7990	6987	1689	7395	6449	1991	6970	6113	2199	6715	5845	2294	6290	5509	2462	6035	5240	2557
	14	20	7055	5240	1423	8585	6987	1689	7990	6516	2014	7480	6113	2223	7225	5912	2318	6715	5509	2486	6460	5307	2605
	16	22	7055	5576	1445	9180	6987	1711	8500	6516	2038	7990	6113	2247	7735	5912	2366	7225	5509	2533	6970	5307	2629
	18	25	7565	5979	1467	9775	7591	1734	9010	7054	2061	8500	6651	2271	8160	6382	2366	7650	5979	2557	7310	5710	2653
	19	27	7820	6181	1489	10115	7994	1756	9350	7390	2085	8840	6987	2294	8500	6718	2390	7990	6315	2557	7650	6046	2653
	22	30	8670	6113	1489	11220	7927	1756	10370	7323	2085	9775	6920	2318	9435	6651	2414	8500	6449	2653	7905	6315	2796
	24	32	9265	6113	1511	11985	7927	1778	11050	7323	2108	10455	6920	2318	10030	6651	2438	8840	6584	2725	8075	6516	2892
1.8+2.5+2.5+3.5	12	18	7055	5240	1423	7990	6987	1689	7395	6449	1991	6970	6113	2199	6715	5845	2294	6290	5509	2462	6035	5240	2557
	14	20	7055	5240	1423	8585	6987	1689	7990	6516	2014	7480	6113	2223	7225	5912	2318	6715	5509	2486	6460	5307	2605
	16	22	7055	5576	1445	9180	6987	1711	8500	6516	2038	7990	6113	2247	7735	5912	2366	7225	5509	2533	6970	5307	2629
	18	25	7565	5979	1467	9775	7591	1734	9010	7054	2061	8500	6651	2271	8160	6382	2366	7650	5979	2557	7310	5710	2653
	19	27	7820	6181	1489	10115	7994	1756	9350	7390	2085	8840	6987	2294	8500	6718	2390	7990	6315	2557	7650	6046	2653
	22	30	8670	6113	1489	11220	7927	1756	10370	7323	2085	9775	6920	2318	9435	6651	2414	8500	6449	2653	7905	6315	2796
	24	32	9265	6113	1511	11985	7927	1778	11050	7323	2108	10455	6920	2318	10030	6651	2438	8840	6584	2725	8075	6516	2892
1.8+2.5+2.5+5.0	12	18	7055	5240	1423	7990	6987	1689	7395	6449	1991	6970	6113	2199	6715	5845	2294	6290	5509	2462	6035	5240	2557
	14	20	7055	5240	1423	8585	6987	1689	7990	6516	2014	7480	6113	2223	7225	5912	2318	6715	5509	2486	6460	5307	2605
	16	22	7055	5576	1445	9180	6987	1711	8500	6516	2038	7990	6113	2247	7735	5912	2366	7225	5509	2533	6970	5307	2629
	18	25	7565	5979	1467	9775	7591	1734	9010	7054	2061	8500	6651	2271	8160	6382	2366	7650	5979	2557	7310	5710	2653
	19	27	7820	6181	1489	10115	7994	1756	9350	7390	2085	8840	6987	2294	8500	6718	2390	7990	6315	2557	7650	6046	2653
	22	30	8670	6113	1489	11220	7927	1756	10370	7323	2085	9775	6920	2318	9435	6651	2414	8500	6449	2653	7905	6315	2796
	24	32	9265	6113	1511	11985	7927	1778	11050	7323	2108	10455	6920	2318	10030	6651	2438	8840	6584	2725	8075	6516	2892
1.8+2.5+3.5+3.5	12	18	7055	5240	1423	7990	6987	1689	7395	6449	1991	6970	6113	2199	6715	5845	2294	6290	5509	2462	6035	5240	2557
	14	20	7055	5240	1423	8585	6987	1689	7990	6516	2014	7480	6113	2223	7225	5912	2318	6715	5509	2486	6460	5307	2605
	16	22	7055	5576	1445	9180	6987	1711	8500	6516	2038	7990	6113	2247	7735	5912	2366	7225	5509	2533	6970	5307	2629
	18	25	7565	5979	1467	9775	7591	1734	9010	7054	2061	8500	6651	2271	8160	6382	2366	7650	5979	2557	7310	5710	2653
	19	27	7820	6181	1489	10115	7994	1756	9350	7390	2085	8840	6987	2294	8500	6718	2390	7990	6315	2557	7650	6046	2653
	22	30	8670	6113	1489	11220	7927	1756	10370	7323	2085	9775	6920	2318	9435	6651	2414	8500	6449	2653	7905	6315	2796
	24	32	9265	6113	1511	11985	7927	1778	11050	7323	2108	10455	6920	2318	10030	6651	2438	8840	6584	2725	8075	6516	2892
1.8+2.5+3.5+5.0	12	18	7055	5240	1423	7990	6987	1689	7395	6449	1991	6970	6113	2199	6715	5845	2294	6290	5509	2462	6035	5240	2557
	14	20	7055	5240	1423	8585	6987	1689	7990	6516	2014	7480	6113	2223	7225	5912	2318	6715	5509	2486	6460	5307	2605
	16	22	7055	5576	1445	9180	6987	1711	8500	6516	2038	7990	6113	2247	7735	5912	2366	7225	5509	2533	6970	5307	2629
	18	25	7565	5979	1467	9775	7591	1734	9010	7054	2061	8500	6651	2271	8160	6382	2366	7650	5979	2557	7310	5710	2653
	19	27	7820	6181	1489	10115	7994	1756	9350	7390	2085	8840	6987	2294	8500	6718	2390	7990	6315	2557	7650	6046	2653
	22	30	8670	6113	1489	11220	7927	1756	10370	7323	2085	9775	6920	2318	9435	6651	2414	8500	6449	2653	7905	6315	2796
	24	32	9265	6113	1511	11985	7927	1778	11050	7323	2108	10455	6920	2318	10030	6651	2438	8840	6584	2725	8075	6516	2892
1.8+2.5+5.0+5.0	12	18	7055	5240	1411	7990	6987	1675	7395	6449	1974	6970	6113	2180	6715	5845	2275	6290	5509	2441	6035	5240	2536
	14	20	7055	5240	1411	8585	6987	1675	7990	6516	1997	7480	6113	2204	7225	5912	2299	6715	5509	2465	6460	5307	2583
	16	22	7055	5576	1433	9180	6987	1697	8500	6516	2021	7990	6113	2228	7735	5912	2346	7225	5509	2512	6970	5307	2607
	18	25	7565	5979	1455	9775	7591	1719	9010	7054	2044	8500	6651	2252	8160	6382	2346	7650	5979	2536	7310	5710	2631
	19	27	7820	6181	1477	10115	7994	1741	9350	7390	2067	8840	6987	2275	8500	6718	2370	7990	6315	2536	7650	6046	2631
	22	30	8670	6113	1477	11220	7927	1741	10370	7323	2067	9775	6920	2299	9435	6651	2394	8500	6449	2631	7905	6315	2773
	24	32	9265	6113	1499	11985	7927	1763	11050	7323	2090	10455	6920	2299	10030	6651	2417	8840	6584	2702	8075	6516	2868

EWB : Evaporator Wet Bulb temperature (°C)
EDB : Evaporator Dry Bulb temperature (°C)
(°CDB) : Outdoor Unit Inlet Air Dry Temperature (°C)

TC : Total Capacity (W)
SHC : Sensible Heating Capacity (w)
PI : Power Input

	INDOOR		OUTDOOR TEMPERATURE (°CDB)																				
	EWB	EDB	-10			21			27			32			35			40			43		
	°C	°C	TC	SHC	PI	TC	SHC	PI	TC	SHC	PI	TC	SHC	PI	TC	SHC	PI	TC	SHC	PI	TC	SHC	PI
1.8+3.5+3.5+3.5	12	18	7055	5240	1423	7990	6987	1689	7395	6449	1991	6970	6113	2199	6715	5845	2294	6290	5509	2462	6035	5240	2557
	14	20	7055	5240	1423	8585	6987	1689	7990	6516	2014	7480	6113	2223	7225	5912	2318	6715	5509	2486	6460	5307	2605
	16	22	7055	5576	1445	9180	6987	1711	8500	6516	2038	7990	6113	2247	7735	5912	2366	7225	5509	2533	6970	5307	2629
	18	25	7565	5979	1467	9775	7591	1734	9010	7054	2061	8500	6651	2271	8160	6382	2366	7650	5979	2557	7310	5710	2653
	19	27	7820	6181	1489	10115	7994	1756	9350	7390	2085	8840	6987	2294	8500	6718	2390	7990	6315	2557	7650	6046	2653
	22	30	8670	6113	1489	11220	7927	1756	10370	7323	2085	9775	6920	2318	9435	6651	2414	8500	6449	2653	7905	6315	2796
	24	32	9265	6113	1511	11985	7927	1778	11050	7323	2108	10455	6920	2318	10030	6651	2438	8840	6584	2725	8075	6516	2892
1.8+3.5+3.5+5.0	12	18	7055	5240	1423	7990	6987	1689	7395	6449	1991	6970	6113	2199	6715	5845	2294	6290	5509	2462	6035	5240	2557
	14	20	7055	5240	1423	8585	6987	1689	7990	6516	2014	7480	6113	2223	7225	5912	2318	6715	5509	2486	6460	5307	2605
	16	22	7055	5576	1445	9180	6987	1711	8500	6516	2038	7990	6113	2247	7735	5912	2366	7225	5509	2533	6970	5307	2629
	18	25	7565	5979	1467	9775	7591	1734	9010	7054	2061	8500	6651	2271	8160	6382	2366	7650	5979	2557	7310	5710	2653
	19	27	7820	6181	1489	10115	7994	1756	9350	7390	2085	8840	6987	2294	8500	6718	2390	7990	6315	2557	7650	6046	2653
	22	30	8670	6113	1489	11220	7927	1756	10370	7323	2085	9775	6920	2318	9435	6651	2414	8500	6449	2653	7905	6315	2796
	24	32	9265	6113	1511	11985	7927	1778	11050	7323	2108	10455	6920	2318	10030	6651	2438	8840	6584	2725	8075	6516	2892
1.8+3.5+5.0+5.0	12	18	7055	5240	1411	7990	6987	1675	7395	6449	1974	6970	6113	2180	6715	5845	2275	6290	5509	2441	6035	5240	2536
	14	20	7055	5240	1411	8585	6987	1675	7990	6516	1997	7480	6113	2204	7225	5912	2299	6715	5509	2465	6460	5307	2583
	16	22	7055	5576	1433	9180	6987	1697	8500	6516	2021	7990	6113	2228	7735	5912	2346	7225	5509	2512	6970	5307	2607
	18	25	7565	5979	1455	9775	7591	1719	9010	7054	2044	8500	6651	2252	8160	6382	2346	7650	5979	2536	7310	5710	2631
	19	27	7820	6181	1477	10115	7994	1741	9350	7390	2067	8840	6987	2275	8500	6718	2370	7990	6315	2536	7650	6046	2631
	22	30	8670	6113	1477	11220	7927	1741	10370	7323	2067	9775	6920	2299	9435	6651	2394	8500	6449	2631	7905	6315	2773
	24	32	9265	6113	1499	11985	7927	1763	11050	7323	2090	10455	6920	2299	10030	6651	2417	8840	6584	2702	8075	6516	2868
2.5+2.5+2.5+2.5	12	18	7055	5240	1423	7990	6987	1689	7395	6449	1991	6970	6113	2199	6715	5845	2294	6290	5509	2462	6035	5240	2557
	14	20	7055	5240	1423	8585	6987	1689	7990	6516	2014	7480	6113	2223	7225	5912	2318	6715	5509	2486	6460	5307	2605
	16	22	7055	5576	1445	9180	6987	1711	8500	6516	2038	7990	6113	2247	7735	5912	2366	7225	5509	2533	6970	5307	2629
	18	25	7565	5979	1467	9775	7591	1734	9010	7054	2061	8500	6651	2271	8160	6382	2366	7650	5979	2557	7310	5710	2653
	19	27	7820	6181	1489	10115	7994	1756	9350	7390	2085	8840	6987	2294	8500	6718	2390	7990	6315	2557	7650	6046	2653
	22	30	8670	6113	1489	11220	7927	1756	10370	7323	2085	9775	6920	2318	9435	6651	2414	8500	6449	2653	7905	6315	2796
	24	32	9265	6113	1511	11985	7927	1778	11050	7323	2108	10455	6920	2318	10030	6651	2438	8840	6584	2725	8075	6516	2892
2.5+2.5+2.5+3.5	12	18	7055	5240	1423	7990	6987	1689	7395	6449	1991	6970	6113	2199	6715	5845	2294	6290	5509	2462	6035	5240	2557
	14	20	7055	5240	1423	8585	6987	1689	7990	6516	2014	7480	6113	2223	7225	5912	2318	6715	5509	2486	6460	5307	2605
	16	22	7055	5576	1445	9180	6987	1711	8500	6516	2038	7990	6113	2247	7735	5912	2366	7225	5509	2533	6970	5307	2629
	18	25	7565	5979	1467	9775	7591	1734	9010	7054	2061	8500	6651	2271	8160	6382	2366	7650	5979	2557	7310	5710	2653
	19	27	7820	6181	1489	10115	7994	1756	9350	7390	2085	8840	6987	2294	8500	6718	2390	7990	6315	2557	7650	6046	2653
	22	30	8670	6113	1489	11220	7927	1756	10370	7323	2085	9775	6920	2318	9435	6651	2414	8500	6449	2653	7905	6315	2796
	24	32	9265	6113	1511	11985	7927	1778	11050	7323	2108	10455	6920	2318	10030	6651	2438	8840	6584	2725	8075	6516	2892
2.5+2.5+2.5+5.0	12	18	7055	5240	1423	7990	6987	1689	7395	6449	1991	6970	6113	2199	6715	5845	2294	6290	5509	2462	6035	5240	2557
	14	20	7055	5240	1423	8585	6987	1689	7990	6516	2014	7480	6113	2223	7225	5912	2318	6715	5509	2486	6460	5307	2605
	16	22	7055	5576	1445	9180	6987	1711	8500	6516	2038	7990	6113	2247	7735	5912	2366	7225	5509	2533	6970	5307	2629
	18	25	7565	5979	1467	9775	7591	1734	9010	7054	2061	8500	6651	2271	8160	6382	2366	7650	5979	2557	7310	5710	2653
	19	27	7820	6181	1489	10115	7994	1756	9350	7390	2085	8840	6987	2294	8500	6718	2390	7990	6315	2557	7650	6046	2653
	22	30	8670	6113	1489	11220	7927	1756	10370	7323	2085	9775	6920	2318	9435	6651	2414	8500	6449	2653	7905	6315	2796
	24	32	9265	6113	1511	11985	7927	1778	11050	7323	2108	10455	6920	2318	10030	6651	2438	8840	6584	2725	8075	6516	2892
2.5+2.5+3.5+3.5	12	18	7055	5240	1423	7990	6987	1689	7395	6449	1991	6970	6113	2199	6715	5845	2294	6290	5509	2462	6035	5240	2557
	14	20	7055	5240	1423	8585	6987	1689	7990	6516	2014	7480	6113	2223	7225	5912	2318	6715	5509	2486	6460	5307	2605
	16	22	7055	5576	1445	9180	6987	1711	8500	6516	2038	7990	6113	2247	7735	5912	2366	7225	5509	2533	6970	5307	2629
	18	25	7565	5979	1467	9775	7591	1734	9010	7054	2061	8500	6651	2271	8160	6382	2366	7650	5979	2557	7310	5710	2653
	19	27	7820	6181	1489	10115	7994	1756	9350	7390	2085	8840	6987	2294	8500	6718	2390	7990	6315	2557	7650	6046	2653
	22	30	8670	6113	1489	11220	7927	1756	10370	7323	2085	9775	6920	2318	9435	6651	2414	8500	6449	2653	7905	6315	2796
	24	32	9265	6113	1511	11985	7927	1778	11050	7323	2108	10455	6920	2318	10030	6651	2438	8840	6584	2725	8075	6516	2892

EWB : Evaporator Wet Bulb temperature (°C)
EDB : Evaporator Dry Bulb temperature (°C)
(°CDB) : Outdoor Unit Inlet Air Dry Temperature (°C)

TC : Total Capacity (W)
SHC : Sensible Heating Capacity (w)
PI : Power Input

	INDOOR		OUTDOOR TEMPERATURE (°CDB)																				
	EWB	EDB	-10			21			27			32			35			40			43		
	°C	°C	TC	SHC	PI	TC	SHC	PI	TC	SHC	PI	TC	SHC	PI	TC	SHC	PI	TC	SHC	PI	TC	SHC	PI
2.5+2.5+3.5+5.0	12	18	7055	5240	1423	7990	6987	1689	7395	6449	1991	6970	6113	2199	6715	5845	2294	6290	5509	2462	6035	5240	2557
	14	20	7055	5240	1423	8585	6987	1689	7990	6516	2014	7480	6113	2223	7225	5912	2318	6715	5509	2486	6460	5307	2605
	16	22	7055	5576	1445	9180	6987	1711	8500	6516	2038	7990	6113	2247	7735	5912	2366	7225	5509	2533	6970	5307	2629
	18	25	7565	5979	1467	9775	7591	1734	9010	7054	2061	8500	6651	2271	8160	6382	2366	7650	5979	2557	7310	5710	2653
	19	27	7820	6181	1489	10115	7994	1756	9350	7390	2085	8840	6987	2294	8500	6718	2390	7990	6315	2557	7650	6046	2653
	22	30	8670	6113	1489	11220	7927	1756	10370	7323	2085	9775	6920	2318	9435	6651	2414	8500	6449	2653	7905	6315	2796
	24	32	9265	6113	1511	11985	7927	1778	11050	7323	2108	10455	6920	2318	10030	6651	2438	8840	6584	2725	8075	6516	2892
2.5+2.5+5.0+5.0	12	18	7055	5240	1411	7990	6987	1675	7395	6449	1974	6970	6113	2180	6715	5845	2275	6290	5509	2441	6035	5240	2536
	14	20	7055	5240	1411	8585	6987	1675	7990	6516	1997	7480	6113	2204	7225	5912	2299	6715	5509	2465	6460	5307	2583
	16	22	7055	5576	1433	9180	6987	1697	8500	6516	2021	7990	6113	2228	7735	5912	2346	7225	5509	2512	6970	5307	2607
	18	25	7565	5979	1455	9775	7591	1719	9010	7054	2044	8500	6651	2252	8160	6382	2346	7650	5979	2536	7310	5710	2631
	19	27	7820	6181	1477	10115	7994	1741	9350	7390	2067	8840	6987	2275	8500	6718	2370	7990	6315	2536	7650	6046	2631
	22	30	8670	6113	1477	11220	7927	1741	10370	7323	2067	9775	6920	2299	9435	6651	2394	8500	6449	2631	7905	6315	2773
	24	32	9265	6113	1499	11985	7927	1763	11050	7323	2090	10455	6920	2299	10030	6651	2417	8840	6584	2702	8075	6516	2868
2.5+3.5+3.5+3.5	12	18	7055	5240	1423	7990	6987	1689	7395	6449	1991	6970	6113	2199	6715	5845	2294	6290	5509	2462	6035	5240	2557
	14	20	7055	5240	1423	8585	6987	1689	7990	6516	2014	7480	6113	2223	7225	5912	2318	6715	5509	2486	6460	5307	2605
	16	22	7055	5576	1445	9180	6987	1711	8500	6516	2038	7990	6113	2247	7735	5912	2366	7225	5509	2533	6970	5307	2629
	18	25	7565	5979	1467	9775	7591	1734	9010	7054	2061	8500	6651	2271	8160	6382	2366	7650	5979	2557	7310	5710	2653
	19	27	7820	6181	1489	10115	7994	1756	9350	7390	2085	8840	6987	2294	8500	6718	2390	7990	6315	2557	7650	6046	2653
	22	30	8670	6113	1489	11220	7927	1756	10370	7323	2085	9775	6920	2318	9435	6651	2414	8500	6449	2653	7905	6315	2796
	24	32	9265	6113	1511	11985	7927	1778	11050	7323	2108	10455	6920	2318	10030	6651	2438	8840	6584	2725	8075	6516	2892
2.5+3.5+3.5+5.0	12	18	7055	5240	1423	7990	6987	1689	7395	6449	1991	6970	6113	2199	6715	5845	2294	6290	5509	2462	6035	5240	2557
	14	20	7055	5240	1423	8585	6987	1689	7990	6516	2014	7480	6113	2223	7225	5912	2318	6715	5509	2486	6460	5307	2605
	16	22	7055	5576	1445	9180	6987	1711	8500	6516	2038	7990	6113	2247	7735	5912	2366	7225	5509	2533	6970	5307	2629
	18	25	7565	5979	1467	9775	7591	1734	9010	7054	2061	8500	6651	2271	8160	6382	2366	7650	5979	2557	7310	5710	2653
	19	27	7820	6181	1489	10115	7994	1756	9350	7390	2085	8840	6987	2294	8500	6718	2390	7990	6315	2557	7650	6046	2653
	22	30	8670	6113	1489	11220	7927	1756	10370	7323	2085	9775	6920	2318	9435	6651	2414	8500	6449	2653	7905	6315	2796
	24	32	9265	6113	1511	11985	7927	1778	11050	7323	2108	10455	6920	2318	10030	6651	2438	8840	6584	2725	8075	6516	2892
3.5+3.5+3.5+3.5	12	18	7055	5240	1423	7990	6987	1689	7395	6449	1991	6970	6113	2199	6715	5845	2294	6290	5509	2462	6035	5240	2557
	14	20	7055	5240	1423	8585	6987	1689	7990	6516	2014	7480	6113	2223	7225	5912	2318	6715	5509	2486	6460	5307	2605
	16	22	7055	5576	1445	9180	6987	1711	8500	6516	2038	7990	6113	2247	7735	5912	2366	7225	5509	2533	6970	5307	2629
	18	25	7565	5979	1467	9775	7591	1734	9010	7054	2061	8500	6651	2271	8160	6382	2366	7650	5979	2557	7310	5710	2653
	19	27	7820	6181	1489	10115	7994	1756	9350	7390	2085	8840	6987	2294	8500	6718	2390	7990	6315	2557	7650	6046	2653
	22	30	8670	6113	1489	11220	7927	1756	10370	7323	2085	9775	6920	2318	9435	6651	2414	8500	6449	2653	7905	6315	2796
	24	32	9265	6113	1511	11985	7927	1778	11050	7323	2108	10455	6920	2318	10030	6651	2438	8840	6584	2725	8075	6516	2892
3.5+3.5+3.5+5.0	12	18	7055	5240	1423	7990	6987	1689	7395	6449	1991	6970	6113	2199	6715	5845	2294	6290	5509	2462	6035	5240	2557
	14	20	7055	5240	1423	8585	6987	1689	7990	6516	2014	7480	6113	2223	7225	5912	2318	6715	5509	2486	6460	5307	2605
	16	22	7055	5576	1445	9180	6987	1711	8500	6516	2038	7990	6113	2247	7735	5912	2366	7225	5509	2533	6970	5307	2629
	18	25	7565	5979	1467	9775	7591	1734	9010	7054	2061	8500	6651	2271	8160	6382	2366	7650	5979	2557	7310	5710	2653
	19	27	7820	6181	1489	10115	7994	1756	9350	7390	2085	8840	6987	2294	8500	6718	2390	7990	6315	2557	7650	6046	2653
	22	30	8670	6113	1489	11220	7927	1756	10370	7323	2085	9775	6920	2318	9435	6651	2414	8500	6449	2653	7905	6315	2796
	24	32	9265	6113	1511	11985	7927	1778	11050	7323	2108	10455	6920	2318	10030	6651	2438	8840	6584	2725	8075	6516	2892
1.2+1.2+1.2+1.2+1.2	12	18	4980	3699	1054	5640	4932	1251	5220	4552	1474	4920	4315	1628	4740	4126	1699	4440	3889	1823	4260	3699	1894
	14	20	4980	3699	1054	6060	4932	1251	5640	4600	1492	5280	4315	1646	5100	4173	1717	4740	3889	1841	4560	3746	1929
	16	22	4980	3936	1070	6480	4932	1267	6000	4600	1509	5640	4315	1664	5460	4173	1752	5100	3889	1876	4920	3746	1947
	18	25	5340	4220	1086	6900	5359	1284	6360	4979	1526	6000	4695	1682	5760	4505	1752	5400	4220	1894	5160	4031	1965
	19	27	5520	4363	1103	7140	5643	1300	6600	5216	1544	6240	4932	1699	6000	4742	1770	5640	4458	1894	5400	4268	1965
	22	30	6120	4315	1103	7920	5596	1300	7320	5169	1544	6900	4884	1717	6660	4695	1788	6000	4552	1965	5580	4458	2071
	24	32	6540	4315	1119	8460	5596	1317	7800	5169	1561	7380	4884	1717	7080	4695	1805	6240	4647	2018	5700	4600	2142

EWB : Evaporator Wet Bulb temperature (°C)
EDB : Evaporator Dry Bulb temperature (°C)
(°CDB) : Outdoor Unit Inlet Air Dry Temperature (°C)

TC : Total Capacity (W)
SHC : Sensible Heating Capacity (w)
PI : Power Input

	INDOOR		OUTDOOR TEMPERATURE (°CDB)																				
	EWB	EDB	-10			21			27			32			35			40			43		
	°C	°C	TC	SHC	PI	TC	SHC	PI	TC	SHC	PI	TC	SHC	PI	TC	SHC	PI	TC	SHC	PI	TC	SHC	PI
1.2+1.2+1.2+1.2+1.8	12	18	5478	4069	1101	6204	5425	1308	5742	5008	1541	5412	4747	1702	5214	4538	1776	4884	4277	1906	4686	4069	1980
	14	20	5478	4069	1101	6666	5425	1308	6204	5060	1559	5808	4747	1721	5610	4590	1795	5214	4277	1924	5016	4121	2017
	16	22	5478	4330	1118	7128	5425	1325	6600	5060	1577	6204	4747	1739	6006	4590	1832	5610	4277	1961	5412	4121	2035
	18	25	5874	4643	1136	7590	5894	1342	6996	5477	1595	6600	5164	1758	6336	4956	1832	5940	4643	1980	5676	4434	2054
	19	27	6072	4799	1153	7854	6207	1359	7260	5738	1614	6864	5425	1776	6600	5216	1850	6204	4903	1980	5940	4695	2054
	22	30	6732	4747	1153	8712	6155	1359	8052	5686	1614	7590	5373	1795	7326	5164	1869	6600	5008	2054	6138	4903	2165
	24	32	7194	4747	1170	9306	6155	1376	8580	5686	1632	8118	5373	1795	7788	5164	1887	6864	5112	2109	6270	5060	2239
1.2+1.2+1.2+1.2+2.5	12	18	6059	4500	1161	6862	6000	1378	6351	5539	1624	5986	5250	1794	5767	5020	1872	5402	4731	2009	5183	4500	2087
	14	20	6059	4500	1161	7373	6000	1378	6862	5596	1643	6424	5250	1814	6205	5077	1892	5767	4731	2028	5548	4558	2126
	16	22	6059	4789	1179	7884	6000	1396	7300	5596	1663	6862	5250	1833	6643	5077	1931	6205	4731	2067	5986	4558	2145
	18	25	6497	5135	1197	8395	6520	1415	7738	6058	1682	7300	5712	1853	7008	5481	1931	6570	5135	2087	6278	4904	2165
	19	27	6716	5308	1215	8687	6866	1433	8030	6347	1701	7592	6000	1872	7300	5770	1950	6862	5423	2087	6570	5193	2165
	22	30	7446	5250	1215	9636	6808	1433	8906	6289	1701	8395	5943	1892	8103	5712	1970	7300	5539	2165	6789	5423	2282
	24	32	7957	5250	1233	10293	6808	1451	9490	6289	1720	8979	5943	1892	8614	5712	1989	7592	5654	2223	6935	5596	2360
1.2+1.2+1.2+1.2+3.5	12	18	6889	5117	1542	7802	6822	1831	7221	6298	2157	6806	5970	2383	6557	5707	2486	6142	5379	2668	5893	5117	2771
	14	20	6889	5117	1542	8383	6822	1831	7802	6363	2183	7304	5970	2409	7055	5773	2512	6557	5379	2694	6308	5182	2823
	16	22	6889	5445	1566	8964	6822	1855	8300	6363	2208	7802	5970	2435	7553	5773	2564	7055	5379	2745	6806	5182	2849
	18	25	7387	5838	1590	9545	7413	1879	8798	6888	2234	8300	6494	2461	7968	6232	2564	7470	5838	2771	7138	5576	2875
	19	27	7636	6035	1614	9877	7806	1903	9130	7216	2259	8632	6822	2486	8300	6560	2590	7802	6166	2771	7470	5904	2875
	22	30	8466	5970	1614	10956	7741	1903	10126	7150	2259	9545	6757	2512	9213	6494	2616	8300	6298	2875	7719	6166	3030
	24	32	9047	5970	1638	11703	7741	1927	10790	7150	2284	10209	6757	2512	9794	6494	2642	8632	6429	2953	7885	6363	3134
1.2+1.2+1.2+1.2+5	12	18	7055	5240	1423	7990	6987	1689	7395	6449	1991	6970	6113	2199	6715	5845	2294	6290	5509	2462	6035	5240	2557
	14	20	7055	5240	1423	8585	6987	1689	7990	6516	2014	7480	6113	2223	7225	5912	2318	6715	5509	2486	6460	5307	2605
	16	22	7055	5576	1445	9180	6987	1711	8500	6516	2038	7990	6113	2247	7735	5912	2366	7225	5509	2533	6970	5307	2629
	18	25	7565	5979	1467	9775	7591	1734	9010	7054	2061	8500	6651	2271	8160	6382	2366	7650	5979	2557	7310	5710	2653
	19	27	7820	6181	1489	10115	7994	1756	9350	7390	2085	8840	6987	2294	8500	6718	2390	7990	6315	2557	7650	6046	2653
	22	30	8670	6113	1489	11220	7927	1756	10370	7323	2085	9775	6920	2318	9435	6651	2414	8500	6449	2653	7905	6315	2796
	24	32	9265	6113	1511	11985	7927	1778	11050	7323	2108	10455	6920	2318	10030	6651	2438	8840	6584	2725	8075	6516	2892
1.2+1.2+1.2+1.8+1.8	12	18	5976	4439	1167	6768	5918	1385	6264	5463	1633	5904	5178	1803	5688	4951	1882	5328	4666	2019	5112	4439	2097
	14	20	5976	4439	1167	7272	5918	1385	6768	5520	1652	6336	5178	1823	6120	5008	1901	5688	4666	2038	5472	4496	2136
	16	22	5976	4723	1185	7776	5918	1404	7200	5520	1671	6768	5178	1842	6552	5008	1940	6120	4666	2078	5904	4496	2156
	18	25	6408	5065	1203	8280	6430	1422	7632	5975	1690	7200	5634	1862	6912	5406	1940	6480	5065	2097	6192	4837	2176
	19	27	6624	5235	1221	8568	6772	1440	7920	6260	1710	7488	5918	1882	7200	5691	1960	6768	5349	2097	6480	5121	2176
	22	30	7344	5178	1221	9504	6715	1440	8784	6203	1710	8280	5861	1901	7992	5634	1980	7200	5463	2176	6696	5349	2293
	24	32	7848	5178	1240	10152	6715	1458	9360	6203	1729	8856	5861	1901	8496	5634	1999	7488	5577	2234	6840	5520	2372
1.2+1.2+1.2+1.8+2.5	12	18	6557	4870	1309	7426	6494	1555	6873	5994	1833	6478	5682	2024	6241	5432	2112	5846	5120	2266	5609	4870	2354
	14	20	6557	4870	1309	7979	6494	1555	7426	6056	1854	6952	5682	2046	6715	5495	2134	6241	5120	2288	6004	4933	2398
	16	22	6557	5182	1330	8532	6494	1575	7900	6056	1876	7426	5682	2068	7189	5495	2178	6715	5120	2332	6478	4933	2420
	18	25	7031	5557	1350	9085	7055	1596	8374	6556	1897	7900	6181	2090	7584	5932	2178	7110	5557	2354	6794	5307	2442
	19	27	7268	5744	1371	9401	7430	1616	8690	6868	1919	8216	6494	2112	7900	6244	2200	7426	5869	2354	7110	5619	2442
	22	30	8058	5682	1371	10428	7368	1616	9638	6806	1919	9085	6431	2134	8769	6181	2222	7900	5994	2442	7347	5869	2574
	24	32	8611	5682	1391	11139	7368	1637	10270	6806	1940	9717	6431	2134	9322	6181	2244	8216	6119	2508	7505	6056	2662
1.2+1.2+1.2+1.8+3.5	12	18	7055	5240	1423	7990	6987	1689	7395	6449	1991	6970	6113	2199	6715	5845	2294	6290	5509	2462	6035	5240	2557
	14	20	7055	5240	1423	8585	6987	1689	7990	6516	2014	7480	6113	2223	7225	5912	2318	6715	5509	2486	6460	5307	2605
	16	22	7055	5576	1445	9180	6987	1711	8500	6516	2038	7990	6113	2247	7735	5912	2366	7225	5509	2533	6970	5307	2629
	18	25	7565	5979	1467	9775	7591	1734	9010	7054	2061	8500	6651	2271	8160	6382	2366	7650	5979	2557	7310	5710	2653
	19	27	7820	6181	1489	10115	7994	1756	9350	7390	2085	8840	6987	2294	8500	6718	2390	7990	6315	2557	7650	6046	2653
	22	30	8670	6113	1489	11220	7927	1756	10370	7323	2085	9775	6920	2318	9435	6651	2414	8500	6449	2653	7905	6315	2796
	24	32	9265	6113	1511	11985	7927	1778	11050	7323	2108	10455	6920	2318	10030	6651	2438	8840	6584	2725	8075	6516	2892

EWB : Evaporator Wet Bulb temperature (°C)
EDB : Evaporator Dry Bulb temperature (°C)
(°CDB) : Outdoor Unit Inlet Air Dry Temperature (°C)

TC : Total Capacity (W)
SHC : Sensible Heating Capacity (w)
PI : Power Input

	INDOOR		OUTDOOR TEMPERATURE (°CDB)																				
	EWB	EDB	-10			21			27			32			35			40			43		
	°C	°C	TC	SHC	PI	TC	SHC	PI	TC	SHC	PI	TC	SHC	PI	TC	SHC	PI	TC	SHC	PI	TC	SHC	PI
1.2+1.2+1.2+1.8+5	12	18	7055	5240	1423	7990	6987	1689	7395	6449	1991	6970	6113	2199	6715	5845	2294	6290	5509	2462	6035	5240	2557
	14	20	7055	5240	1423	8585	6987	1689	7990	6516	2014	7480	6113	2223	7225	5912	2318	6715	5509	2486	6460	5307	2605
	16	22	7055	5576	1445	9180	6987	1711	8500	6516	2038	7990	6113	2247	7735	5912	2366	7225	5509	2533	6970	5307	2629
	18	25	7565	5979	1467	9775	7591	1734	9010	7054	2061	8500	6651	2271	8160	6382	2366	7650	5979	2557	7310	5710	2653
	19	27	7820	6181	1489	10115	7994	1756	9350	7390	2085	8840	6987	2294	8500	6718	2390	7990	6315	2557	7650	6046	2653
	22	30	8670	6113	1489	11220	7927	1756	10370	7323	2085	9775	6920	2318	9435	6651	2414	8500	6449	2653	7905	6315	2796
	24	32	9265	6113	1511	11985	7927	1778	11050	7323	2108	10455	6920	2318	10030	6651	2438	8840	6584	2725	8075	6516	2892
1.2+1.2+1.2+2.5+2.5	12	18	7055	5240	1458	7990	6987	1732	7395	6449	2041	6970	6113	2254	6715	5845	2352	6290	5509	2524	6035	5240	2622
	14	20	7055	5240	1458	8585	6987	1732	7990	6516	2065	7480	6113	2279	7225	5912	2377	6715	5509	2548	6460	5307	2671
	16	22	7055	5576	1481	9180	6987	1754	8500	6516	2089	7990	6113	2303	7735	5912	2426	7225	5509	2597	6970	5307	2695
	18	25	7565	5979	1504	9775	7591	1777	9010	7054	2113	8500	6651	2328	8160	6382	2426	7650	5979	2622	7310	5710	2720
	19	27	7820	6181	1527	10115	7994	1800	9350	7390	2137	8840	6987	2352	8500	6718	2450	7990	6315	2622	7650	6046	2720
	22	30	8670	6113	1527	11220	7927	1800	10370	7323	2137	9775	6920	2377	9435	6651	2475	8500	6449	2720	7905	6315	2867
	24	32	9265	6113	1549	11985	7927	1823	11050	7323	2161	10455	6920	2377	10030	6651	2499	8840	6584	2793	8075	6516	2965
1.2+1.2+1.2+2.5+3.5	12	18	7055	5240	1423	7990	6987	1689	7395	6449	1991	6970	6113	2199	6715	5845	2294	6290	5509	2462	6035	5240	2557
	14	20	7055	5240	1423	8585	6987	1689	7990	6516	2014	7480	6113	2223	7225	5912	2318	6715	5509	2486	6460	5307	2605
	16	22	7055	5576	1445	9180	6987	1711	8500	6516	2038	7990	6113	2247	7735	5912	2366	7225	5509	2533	6970	5307	2629
	18	25	7565	5979	1467	9775	7591	1734	9010	7054	2061	8500	6651	2271	8160	6382	2366	7650	5979	2557	7310	5710	2653
	19	27	7820	6181	1489	10115	7994	1756	9350	7390	2085	8840	6987	2294	8500	6718	2390	7990	6315	2557	7650	6046	2653
	22	30	8670	6113	1489	11220	7927	1756	10370	7323	2085	9775	6920	2318	9435	6651	2414	8500	6449	2653	7905	6315	2796
	24	32	9265	6113	1511	11985	7927	1778	11050	7323	2108	10455	6920	2318	10030	6651	2438	8840	6584	2725	8075	6516	2892
1.2+1.2+1.2+2.5+5	12	18	7055	5240	1423	7990	6987	1689	7395	6449	1991	6970	6113	2199	6715	5845	2294	6290	5509	2462	6035	5240	2557
	14	20	7055	5240	1423	8585	6987	1689	7990	6516	2014	7480	6113	2223	7225	5912	2318	6715	5509	2486	6460	5307	2605
	16	22	7055	5576	1445	9180	6987	1711	8500	6516	2038	7990	6113	2247	7735	5912	2366	7225	5509	2533	6970	5307	2629
	18	25	7565	5979	1467	9775	7591	1734	9010	7054	2061	8500	6651	2271	8160	6382	2366	7650	5979	2557	7310	5710	2653
	19	27	7820	6181	1489	10115	7994	1756	9350	7390	2085	8840	6987	2294	8500	6718	2390	7990	6315	2557	7650	6046	2653
	22	30	8670	6113	1489	11220	7927	1756	10370	7323	2085	9775	6920	2318	9435	6651	2414	8500	6449	2653	7905	6315	2796
	24	32	9265	6113	1511	11985	7927	1778	11050	7323	2108	10455	6920	2318	10030	6651	2438	8840	6584	2725	8075	6516	2892
1.2+1.2+1.2+3.5+3.5	12	18	7055	5240	1423	7990	6987	1689	7395	6449	1991	6970	6113	2199	6715	5845	2294	6290	5509	2462	6035	5240	2557
	14	20	7055	5240	1423	8585	6987	1689	7990	6516	2014	7480	6113	2223	7225	5912	2318	6715	5509	2486	6460	5307	2605
	16	22	7055	5576	1445	9180	6987	1711	8500	6516	2038	7990	6113	2247	7735	5912	2366	7225	5509	2533	6970	5307	2629
	18	25	7565	5979	1467	9775	7591	1734	9010	7054	2061	8500	6651	2271	8160	6382	2366	7650	5979	2557	7310	5710	2653
	19	27	7820	6181	1489	10115	7994	1756	9350	7390	2085	8840	6987	2294	8500	6718	2390	7990	6315	2557	7650	6046	2653
	22	30	8670	6113	1489	11220	7927	1756	10370	7323	2085	9775	6920	2318	9435	6651	2414	8500	6449	2653	7905	6315	2796
	24	32	9265	6113	1511	11985	7927	1778	11050	7323	2108	10455	6920	2318	10030	6651	2438	8840	6584	2725	8075	6516	2892
1.2+1.2+1.2+3.5+5	12	18	7055	5240	1423	7990	6987	1689	7395	6449	1991	6970	6113	2199	6715	5845	2294	6290	5509	2462	6035	5240	2557
	14	20	7055	5240	1423	8585	6987	1689	7990	6516	2014	7480	6113	2223	7225	5912	2318	6715	5509	2486	6460	5307	2605
	16	22	7055	5576	1445	9180	6987	1711	8500	6516	2038	7990	6113	2247	7735	5912	2366	7225	5509	2533	6970	5307	2629
	18	25	7565	5979	1467	9775	7591	1734	9010	7054	2061	8500	6651	2271	8160	6382	2366	7650	5979	2557	7310	5710	2653
	19	27	7820	6181	1489	10115	7994	1756	9350	7390	2085	8840	6987	2294	8500	6718	2390	7990	6315	2557	7650	6046	2653
	22	30	8670	6113	1489	11220	7927	1756	10370	7323	2085	9775	6920	2318	9435	6651	2414	8500	6449	2653	7905	6315	2796
	24	32	9265	6113	1511	11985	7927	1778	11050	7323	2108	10455	6920	2318	10030	6651	2438	8840	6584	2725	8075	6516	2892
1.2+1.2+1.2+5+5	12	18	7055	5240	1423	7990	6987	1689	7395	6449	1991	6970	6113	2199	6715	5845	2294	6290	5509	2462	6035	5240	2557
	14	20	7055	5240	1423	8585	6987	1689	7990	6516	2014	7480	6113	2223	7225	5912	2318	6715	5509	2486	6460	5307	2605
	16	22	7055	5576	1445	9180	6987	1711	8500	6516	2038	7990	6113	2247	7735	5912	2366	7225	5509	2533	6970	5307	2629
	18	25	7565	5979	1467	9775	7591	1734	9010	7054	2061	8500	6651	2271	8160	6382	2366	7650	5979	2557	7310	5710	2653
	19	27	7820	6181	1489	10115	7994	1756	9350	7390	2085	8840	6987	2294	8500	6718	2390	7990	6315	2557	7650	6046	2653
	22	30	8670	6113	1489	11220	7927	1756	10370	7323	2085	9775	6920	2318	9435	6651	2414	8500	6449	2653	7905	6315	2796
	24	32	9265	6113	1511	11985	7927	1778	11050	7323	2108	10455	6920	2318	10030	6651	2438	8840	6584	2725	8075	6516	2892

EWB : Evaporator Wet Bulb temperature (°C)
EDB : Evaporator Dry Bulb temperature (°C)
(°CDB) : Outdoor Unit Inlet Air Dry Temperature (°C)

TC : Total Capacity (W)
SHC : Sensible Heating Capacity (w)
PI : Power Input

	INDOOR		OUTDOOR TEMPERATURE (°CDB)																				
	EWB	EDB	-10			21			27			32			35			40			43		
	°C	°C	TC	SHC	PI	TC	SHC	PI	TC	SHC	PI	TC	SHC	PI	TC	SHC	PI	TC	SHC	PI	TC	SHC	PI
1.2+1.2+1.8+1.8+1.8	12	18	6474	4809	1298	7332	6411	1541	6786	5918	1816	6396	5610	2006	6162	5363	2093	5772	5055	2245	5538	4809	2333
	14	20	6474	4809	1298	7878	6411	1541	7332	5980	1837	6864	5610	2027	6630	5425	2115	6162	5055	2267	5928	4870	2376
	16	22	6474	5117	1318	8424	6411	1561	7800	5980	1859	7332	5610	2049	7098	5425	2158	6630	5055	2311	6396	4870	2398
	18	25	6942	5487	1338	8970	6966	1581	8268	6473	1880	7800	6103	2071	7488	5857	2158	7020	5487	2333	6708	5240	2420
	19	27	7176	5672	1358	9282	7336	1602	8580	6781	1901	8112	6411	2093	7800	6165	2180	7332	5795	2333	7020	5548	2420
	22	30	7956	5610	1358	10296	7274	1602	9516	6720	1901	8970	6350	2115	8658	6103	2202	7800	5918	2420	7254	5795	2551
	24	32	8502	5610	1379	10998	7274	1622	10140	6720	1923	9594	6350	2115	9204	6103	2224	8112	6041	2485	7410	5980	2638
1.2+1.2+1.8+1.8+2.5	12	18	7055	5240	1482	7990	6987	1760	7395	6449	2074	6970	6113	2291	6715	5845	2390	6290	5509	2565	6035	5240	2664
	14	20	7055	5240	1482	8585	6987	1760	7990	6516	2099	7480	6113	2316	7225	5912	2415	6715	5509	2590	6460	5307	2714
	16	22	7055	5576	1505	9180	6987	1783	8500	6516	2123	7990	6113	2341	7735	5912	2465	7225	5509	2639	6970	5307	2739
	18	25	7565	5979	1528	9775	7591	1806	9010	7054	2147	8500	6651	2366	8160	6382	2465	7650	5979	2664	7310	5710	2764
	19	27	7820	6181	1552	10115	7994	1829	9350	7390	2172	8840	6987	2390	8500	6718	2490	7990	6315	2664	7650	6046	2764
	22	30	8670	6113	1552	11220	7927	1829	10370	7323	2172	9775	6920	2415	9435	6651	2515	8500	6449	2764	7905	6315	2913
	24	32	9265	6113	1575	11985	7927	1853	11050	7323	2196	10455	6920	2415	10030	6651	2540	8840	6584	2839	8075	6516	3013
1.2+1.2+1.8+1.8+3.5	12	18	7055	5240	1423	7990	6987	1689	7395	6449	1991	6970	6113	2199	6715	5845	2294	6290	5509	2462	6035	5240	2557
	14	20	7055	5240	1423	8585	6987	1689	7990	6516	2014	7480	6113	2223	7225	5912	2318	6715	5509	2486	6460	5307	2605
	16	22	7055	5576	1445	9180	6987	1711	8500	6516	2038	7990	6113	2247	7735	5912	2366	7225	5509	2533	6970	5307	2629
	18	25	7565	5979	1467	9775	7591	1734	9010	7054	2061	8500	6651	2271	8160	6382	2366	7650	5979	2557	7310	5710	2653
	19	27	7820	6181	1489	10115	7994	1756	9350	7390	2085	8840	6987	2294	8500	6718	2390	7990	6315	2557	7650	6046	2653
	22	30	8670	6113	1489	11220	7927	1756	10370	7323	2085	9775	6920	2318	9435	6651	2414	8500	6449	2653	7905	6315	2796
	24	32	9265	6113	1511	11985	7927	1778	11050	7323	2108	10455	6920	2318	10030	6651	2438	8840	6584	2725	8075	6516	2892
1.2+1.2+1.8+1.8+5	12	18	7055	5240	1423	7990	6987	1689	7395	6449	1991	6970	6113	2199	6715	5845	2294	6290	5509	2462	6035	5240	2557
	14	20	7055	5240	1423	8585	6987	1689	7990	6516	2014	7480	6113	2223	7225	5912	2318	6715	5509	2486	6460	5307	2605
	16	22	7055	5576	1445	9180	6987	1711	8500	6516	2038	7990	6113	2247	7735	5912	2366	7225	5509	2533	6970	5307	2629
	18	25	7565	5979	1467	9775	7591	1734	9010	7054	2061	8500	6651	2271	8160	6382	2366	7650	5979	2557	7310	5710	2653
	19	27	7820	6181	1489	10115	7994	1756	9350	7390	2085	8840	6987	2294	8500	6718	2390	7990	6315	2557	7650	6046	2653
	22	30	8670	6113	1489	11220	7927	1756	10370	7323	2085	9775	6920	2318	9435	6651	2414	8500	6449	2653	7905	6315	2796
	24	32	9265	6113	1511	11985	7927	1778	11050	7323	2108	10455	6920	2318	10030	6651	2438	8840	6584	2725	8075	6516	2892
1.2+1.2+1.8+2.5+2.5	12	18	7055	5240	1423	7990	6987	1689	7395	6449	1991	6970	6113	2199	6715	5845	2294	6290	5509	2462	6035	5240	2557
	14	20	7055	5240	1423	8585	6987	1689	7990	6516	2014	7480	6113	2223	7225	5912	2318	6715	5509	2486	6460	5307	2605
	16	22	7055	5576	1445	9180	6987	1711	8500	6516	2038	7990	6113	2247	7735	5912	2366	7225	5509	2533	6970	5307	2629
	18	25	7565	5979	1467	9775	7591	1734	9010	7054	2061	8500	6651	2271	8160	6382	2366	7650	5979	2557	7310	5710	2653
	19	27	7820	6181	1489	10115	7994	1756	9350	7390	2085	8840	6987	2294	8500	6718	2390	7990	6315	2557	7650	6046	2653
	22	30	8670	6113	1489	11220	7927	1756	10370	7323	2085	9775	6920	2318	9435	6651	2414	8500	6449	2653	7905	6315	2796
	24	32	9265	6113	1511	11985	7927	1778	11050	7323	2108	10455	6920	2318	10030	6651	2438	8840	6584	2725	8075	6516	2892
1.2+1.2+1.8+2.5+3.5	12	18	7055	5240	1423	7990	6987	1689	7395	6449	1991	6970	6113	2199	6715	5845	2294	6290	5509	2462	6035	5240	2557
	14	20	7055	5240	1423	8585	6987	1689	7990	6516	2014	7480	6113	2223	7225	5912	2318	6715	5509	2486	6460	5307	2605
	16	22	7055	5576	1445	9180	6987	1711	8500	6516	2038	7990	6113	2247	7735	5912	2366	7225	5509	2533	6970	5307	2629
	18	25	7565	5979	1467	9775	7591	1734	9010	7054	2061	8500	6651	2271	8160	6382	2366	7650	5979	2557	7310	5710	2653
	19	27	7820	6181	1489	10115	7994	1756	9350	7390	2085	8840	6987	2294	8500	6718	2390	7990	6315	2557	7650	6046	2653
	22	30	8670	6113	1489	11220	7927	1756	10370	7323	2085	9775	6920	2318	9435	6651	2414	8500	6449	2653	7905	6315	2796
	24	32	9265	6113	1511	11985	7927	1778	11050	7323	2108	10455	6920	2318	10030	6651	2438	8840	6584	2725	8075	6516	2892
1.2+1.2+1.8+2.5+5	12	18	7055	5240	1423	7990	6987	1689	7395	6449	1991	6970	6113	2199	6715	5845	2294	6290	5509	2462	6035	5240	2557
	14	20	7055	5240	1423	8585	6987	1689	7990	6516	2014	7480	6113	2223	7225	5912	2318	6715	5509	2486	6460	5307	2605
	16	22	7055	5576	1445	9180	6987	1711	8500	6516	2038	7990	6113	2247	7735	5912	2366	7225	5509	2533	6970	5307	2629
	18	25	7565	5979	1467	9775	7591	1734	9010	7054	2061	8500	6651	2271	8160	6382	2366	7650	5979	2557	7310	5710	2653
	19	27	7820	6181	1489	10115	7994	1756	9350	7390	2085	8840	6987	2294	8500	6718	2390	7990	6315	2557	7650	6046	2653
	22	30	8670	6113	1489	11220	7927	1756	10370	7323	2085	9775	6920	2318	9435	6651	2414	8500	6449	2653	7905	6315	2796
	24	32	9265	6113	1511	11985	7927	1778	11050	7323	2108	10455	6920	2318	10030	6651	2438	8840	6584	2725	8075	6516	2892

EWB : Evaporator Wet Bulb temperature (°C)
EDB : Evaporator Dry Bulb temperature (°C)
(°CDB) : Outdoor Unit Inlet Air Dry Temperature (°C)

TC : Total Capacity (W)
SHC : Sensible Heating Capacity (w)
PI : Power Input

	INDOOR		OUTDOOR TEMPERATURE (°CDB)																				
	EWB	EDB	-10			21			27			32			35			40			43		
	°C	°C	TC	SHC	PI	TC	SHC	PI	TC	SHC	PI	TC	SHC	PI	TC	SHC	PI	TC	SHC	PI	TC	SHC	PI
1.2+1.2+1.8+3.5+3.5	12	18	7055	5240	1423	7990	6987	1689	7395	6449	1991	6970	6113	2199	6715	5845	2294	6290	5509	2462	6035	5240	2557
	14	20	7055	5240	1423	8585	6987	1689	7990	6516	2014	7480	6113	2223	7225	5912	2318	6715	5509	2486	6460	5307	2605
	16	22	7055	5576	1445	9180	6987	1711	8500	6516	2038	7990	6113	2247	7735	5912	2366	7225	5509	2533	6970	5307	2629
	18	25	7565	5979	1467	9775	7591	1734	9010	7054	2061	8500	6651	2271	8160	6382	2366	7650	5979	2557	7310	5710	2653
	19	27	7820	6181	1489	10115	7994	1756	9350	7390	2085	8840	6987	2294	8500	6718	2390	7990	6315	2557	7650	6046	2653
	22	30	8670	6113	1489	11220	7927	1756	10370	7323	2085	9775	6920	2318	9435	6651	2414	8500	6449	2653	7905	6315	2796
	24	32	9265	6113	1511	11985	7927	1778	11050	7323	2108	10455	6920	2318	10030	6651	2438	8840	6584	2725	8075	6516	2892
1.2+1.2+1.8+3.5+5	12	18	7055	5240	1423	7990	6987	1689	7395	6449	1991	6970	6113	2199	6715	5845	2294	6290	5509	2462	6035	5240	2557
	14	20	7055	5240	1423	8585	6987	1689	7990	6516	2014	7480	6113	2223	7225	5912	2318	6715	5509	2486	6460	5307	2605
	16	22	7055	5576	1445	9180	6987	1711	8500	6516	2038	7990	6113	2247	7735	5912	2366	7225	5509	2533	6970	5307	2629
	18	25	7565	5979	1467	9775	7591	1734	9010	7054	2061	8500	6651	2271	8160	6382	2366	7650	5979	2557	7310	5710	2653
	19	27	7820	6181	1489	10115	7994	1756	9350	7390	2085	8840	6987	2294	8500	6718	2390	7990	6315	2557	7650	6046	2653
	22	30	8670	6113	1489	11220	7927	1756	10370	7323	2085	9775	6920	2318	9435	6651	2414	8500	6449	2653	7905	6315	2796
	24	32	9265	6113	1511	11985	7927	1778	11050	7323	2108	10455	6920	2318	10030	6651	2438	8840	6584	2725	8075	6516	2892
1.2+1.2+1.8+5+5	12	18	7055	5240	1423	7990	6987	1689	7395	6449	1991	6970	6113	2199	6715	5845	2294	6290	5509	2462	6035	5240	2557
	14	20	7055	5240	1423	8585	6987	1689	7990	6516	2014	7480	6113	2223	7225	5912	2318	6715	5509	2486	6460	5307	2605
	16	22	7055	5576	1445	9180	6987	1711	8500	6516	2038	7990	6113	2247	7735	5912	2366	7225	5509	2533	6970	5307	2629
	18	25	7565	5979	1467	9775	7591	1734	9010	7054	2061	8500	6651	2271	8160	6382	2366	7650	5979	2557	7310	5710	2653
	19	27	7820	6181	1489	10115	7994	1756	9350	7390	2085	8840	6987	2294	8500	6718	2390	7990	6315	2557	7650	6046	2653
	22	30	8670	6113	1489	11220	7927	1756	10370	7323	2085	9775	6920	2318	9435	6651	2414	8500	6449	2653	7905	6315	2796
	24	32	9265	6113	1511	11985	7927	1778	11050	7323	2108	10455	6920	2318	10030	6651	2438	8840	6584	2725	8075	6516	2892
1.2+1.2+2.5+2.5+2.5	12	18	7055	5240	1423	7990	6987	1689	7395	6449	1991	6970	6113	2199	6715	5845	2294	6290	5509	2462	6035	5240	2557
	14	20	7055	5240	1423	8585	6987	1689	7990	6516	2014	7480	6113	2223	7225	5912	2318	6715	5509	2486	6460	5307	2605
	16	22	7055	5576	1445	9180	6987	1711	8500	6516	2038	7990	6113	2247	7735	5912	2366	7225	5509	2533	6970	5307	2629
	18	25	7565	5979	1467	9775	7591	1734	9010	7054	2061	8500	6651	2271	8160	6382	2366	7650	5979	2557	7310	5710	2653
	19	27	7820	6181	1489	10115	7994	1756	9350	7390	2085	8840	6987	2294	8500	6718	2390	7990	6315	2557	7650	6046	2653
	22	30	8670	6113	1489	11220	7927	1756	10370	7323	2085	9775	6920	2318	9435	6651	2414	8500	6449	2653	7905	6315	2796
	24	32	9265	6113	1511	11985	7927	1778	11050	7323	2108	10455	6920	2318	10030	6651	2438	8840	6584	2725	8075	6516	2892
1.2+1.2+2.5+2.5+3.5	12	18	7055	5240	1423	7990	6987	1689	7395	6449	1991	6970	6113	2199	6715	5845	2294	6290	5509	2462	6035	5240	2557
	14	20	7055	5240	1423	8585	6987	1689	7990	6516	2014	7480	6113	2223	7225	5912	2318	6715	5509	2486	6460	5307	2605
	16	22	7055	5576	1445	9180	6987	1711	8500	6516	2038	7990	6113	2247	7735	5912	2366	7225	5509	2533	6970	5307	2629
	18	25	7565	5979	1467	9775	7591	1734	9010	7054	2061	8500	6651	2271	8160	6382	2366	7650	5979	2557	7310	5710	2653
	19	27	7820	6181	1489	10115	7994	1756	9350	7390	2085	8840	6987	2294	8500	6718	2390	7990	6315	2557	7650	6046	2653
	22	30	8670	6113	1489	11220	7927	1756	10370	7323	2085	9775	6920	2318	9435	6651	2414	8500	6449	2653	7905	6315	2796
	24	32	9265	6113	1511	11985	7927	1778	11050	7323	2108	10455	6920	2318	10030	6651	2438	8840	6584	2725	8075	6516	2892
1.2+1.2+2.5+2.5+5	12	18	7055	5240	1423	7990	6987	1689	7395	6449	1991	6970	6113	2199	6715	5845	2294	6290	5509	2462	6035	5240	2557
	14	20	7055	5240	1423	8585	6987	1689	7990	6516	2014	7480	6113	2223	7225	5912	2318	6715	5509	2486	6460	5307	2605
	16	22	7055	5576	1445	9180	6987	1711	8500	6516	2038	7990	6113	2247	7735	5912	2366	7225	5509	2533	6970	5307	2629
	18	25	7565	5979	1467	9775	7591	1734	9010	7054	2061	8500	6651	2271	8160	6382	2366	7650	5979	2557	7310	5710	2653
	19	27	7820	6181	1489	10115	7994	1756	9350	7390	2085	8840	6987	2294	8500	6718	2390	7990	6315	2557	7650	6046	2653
	22	30	8670	6113	1489	11220	7927	1756	10370	7323	2085	9775	6920	2318	9435	6651	2414	8500	6449	2653	7905	6315	2796
	24	32	9265	6113	1511	11985	7927	1778	11050	7323	2108	10455	6920	2318	10030	6651	2438	8840	6584	2725	8075	6516	2892
1.2+1.2+2.5+3.5+3.5	12	18	7055	5240	1423	7990	6987	1689	7395	6449	1991	6970	6113	2199	6715	5845	2294	6290	5509	2462	6035	5240	2557
	14	20	7055	5240	1423	8585	6987	1689	7990	6516	2014	7480	6113	2223	7225	5912	2318	6715	5509	2486	6460	5307	2605
	16	22	7055	5576	1445	9180	6987	1711	8500	6516	2038	7990	6113	2247	7735	5912	2366	7225	5509	2533	6970	5307	2629
	18	25	7565	5979	1467	9775	7591	1734	9010	7054	2061	8500	6651	2271	8160	6382	2366	7650	5979	2557	7310	5710	2653
	19	27	7820	6181	1489	10115	7994	1756	9350	7390	2085	8840	6987	2294	8500	6718	2390	7990	6315	2557	7650	6046	2653
	22	30	8670	6113	1489	11220	7927	1756	10370	7323	2085	9775	6920	2318	9435	6651	2414	8500	6449	2653	7905	6315	2796
	24	32	9265	6113	1511	11985	7927	1778	11050	7323	2108	10455	6920	2318	10030	6651	2438	8840	6584	2725	8075	6516	2892

EWB : Evaporator Wet Bulb temperature (°C)
EDB : Evaporator Dry Bulb temperature (°C)
(°CDB) : Outdoor Unit Inlet Air Dry Temperature (°C)

TC : Total Capacity (W)
SHC : Sensible Heating Capacity (w)
PI : Power Input

	INDOOR		OUTDOOR TEMPERATURE (°CDB)																				
	EWB	EDB	-10			21			27			32			35			40			43		
	°C	°C	TC	SHC	PI	TC	SHC	PI	TC	SHC	PI	TC	SHC	PI	TC	SHC	PI	TC	SHC	PI	TC	SHC	PI
1.2+1.2+2.5+3.5+5	12	18	7055	5240	1423	7990	6987	1689	7395	6449	1991	6970	6113	2199	6715	5845	2294	6290	5509	2462	6035	5240	2557
	14	20	7055	5240	1423	8585	6987	1689	7990	6516	2014	7480	6113	2223	7225	5912	2318	6715	5509	2486	6460	5307	2605
	16	22	7055	5576	1445	9180	6987	1711	8500	6516	2038	7990	6113	2247	7735	5912	2366	7225	5509	2533	6970	5307	2629
	18	25	7565	5979	1467	9775	7591	1734	9010	7054	2061	8500	6651	2271	8160	6382	2366	7650	5979	2557	7310	5710	2653
	19	27	7820	6181	1489	10115	7994	1756	9350	7390	2085	8840	6987	2294	8500	6718	2390	7990	6315	2557	7650	6046	2653
	22	30	8670	6113	1489	11220	7927	1756	10370	7323	2085	9775	6920	2318	9435	6651	2414	8500	6449	2653	7905	6315	2796
	24	32	9265	6113	1511	11985	7927	1778	11050	7323	2108	10455	6920	2318	10030	6651	2438	8840	6584	2725	8075	6516	2892
1.2+1.2+2.5+5+5	12	18	7055	5240	1423	7990	6987	1689	7395	6449	1991	6970	6113	2199	6715	5845	2294	6290	5509	2462	6035	5240	2557
	14	20	7055	5240	1423	8585	6987	1689	7990	6516	2014	7480	6113	2223	7225	5912	2318	6715	5509	2486	6460	5307	2605
	16	22	7055	5576	1445	9180	6987	1711	8500	6516	2038	7990	6113	2247	7735	5912	2366	7225	5509	2533	6970	5307	2629
	18	25	7565	5979	1467	9775	7591	1734	9010	7054	2061	8500	6651	2271	8160	6382	2366	7650	5979	2557	7310	5710	2653
	19	27	7820	6181	1489	10115	7994	1756	9350	7390	2085	8840	6987	2294	8500	6718	2390	7990	6315	2557	7650	6046	2653
	22	30	8670	6113	1489	11220	7927	1756	10370	7323	2085	9775	6920	2318	9435	6651	2414	8500	6449	2653	7905	6315	2796
	24	32	9265	6113	1511	11985	7927	1778	11050	7323	2108	10455	6920	2318	10030	6651	2438	8840	6584	2725	8075	6516	2892
1.2+1.2+3.5+3.5+3.5	12	18	7055	5240	1423	7990	6987	1689	7395	6449	1991	6970	6113	2199	6715	5845	2294	6290	5509	2462	6035	5240	2557
	14	20	7055	5240	1423	8585	6987	1689	7990	6516	2014	7480	6113	2223	7225	5912	2318	6715	5509	2486	6460	5307	2605
	16	22	7055	5576	1445	9180	6987	1711	8500	6516	2038	7990	6113	2247	7735	5912	2366	7225	5509	2533	6970	5307	2629
	18	25	7565	5979	1467	9775	7591	1734	9010	7054	2061	8500	6651	2271	8160	6382	2366	7650	5979	2557	7310	5710	2653
	19	27	7820	6181	1489	10115	7994	1756	9350	7390	2085	8840	6987	2294	8500	6718	2390	7990	6315	2557	7650	6046	2653
	22	30	8670	6113	1489	11220	7927	1756	10370	7323	2085	9775	6920	2318	9435	6651	2414	8500	6449	2653	7905	6315	2796
	24	32	9265	6113	1511	11985	7927	1778	11050	7323	2108	10455	6920	2318	10030	6651	2438	8840	6584	2725	8075	6516	2892
1.2+1.2+3.5+3.5+5	12	18	7055	5240	1423	7990	6987	1689	7395	6449	1991	6970	6113	2199	6715	5845	2294	6290	5509	2462	6035	5240	2557
	14	20	7055	5240	1423	8585	6987	1689	7990	6516	2014	7480	6113	2223	7225	5912	2318	6715	5509	2486	6460	5307	2605
	16	22	7055	5576	1445	9180	6987	1711	8500	6516	2038	7990	6113	2247	7735	5912	2366	7225	5509	2533	6970	5307	2629
	18	25	7565	5979	1467	9775	7591	1734	9010	7054	2061	8500	6651	2271	8160	6382	2366	7650	5979	2557	7310	5710	2653
	19	27	7820	6181	1489	10115	7994	1756	9350	7390	2085	8840	6987	2294	8500	6718	2390	7990	6315	2557	7650	6046	2653
	22	30	8670	6113	1489	11220	7927	1756	10370	7323	2085	9775	6920	2318	9435	6651	2414	8500	6449	2653	7905	6315	2796
	24	32	9265	6113	1511	11985	7927	1778	11050	7323	2108	10455	6920	2318	10030	6651	2438	8840	6584	2725	8075	6516	2892
1.2+1.8+1.8+1.8+1.8	12	18	6972	5178	1506	7896	6905	1788	7308	6373	2107	6888	6041	2328	6636	5776	2429	6216	5444	2606	5964	5178	2707
	14	20	6972	5178	1506	8484	6905	1788	7896	6440	2132	7392	6041	2353	7140	5842	2454	6636	5444	2631	6384	5245	2758
	16	22	6972	5510	1529	9072	6905	1812	8400	6440	2157	7896	6041	2378	7644	5842	2505	7140	5444	2682	6888	5245	2783
	18	25	7476	5909	1553	9660	7502	1835	8904	6971	2182	8400	6573	2404	8064	6307	2505	7560	5909	2707	7224	5643	2808
	19	27	7728	6108	1576	9996	7900	1859	9240	7303	2207	8736	6905	2429	8400	6639	2530	7896	6241	2707	7560	5975	2808
	22	30	8568	6041	1576	11088	7834	1859	10248	7236	2207	9660	6838	2454	9324	6573	2555	8400	6373	2808	7812	6241	2960
	24	32	9156	6041	1600	11844	7834	1882	10920	7236	2231	10332	6838	2454	9912	6573	2581	8736	6506	2884	7980	6440	3061
1.2+1.8+1.8+1.8+2.5	12	18	7055	5240	1423	7990	6987	1689	7395	6449	1991	6970	6113	2199	6715	5845	2294	6290	5509	2462	6035	5240	2557
	14	20	7055	5240	1423	8585	6987	1689	7990	6516	2014	7480	6113	2223	7225	5912	2318	6715	5509	2486	6460	5307	2605
	16	22	7055	5576	1445	9180	6987	1711	8500	6516	2038	7990	6113	2247	7735	5912	2366	7225	5509	2533	6970	5307	2629
	18	25	7565	5979	1467	9775	7591	1734	9010	7054	2061	8500	6651	2271	8160	6382	2366	7650	5979	2557	7310	5710	2653
	19	27	7820	6181	1489	10115	7994	1756	9350	7390	2085	8840	6987	2294	8500	6718	2390	7990	6315	2557	7650	6046	2653
	22	30	8670	6113	1489	11220	7927	1756	10370	7323	2085	9775	6920	2318	9435	6651	2414	8500	6449	2653	7905	6315	2796
	24	32	9265	6113	1511	11985	7927	1778	11050	7323	2108	10455	6920	2318	10030	6651	2438	8840	6584	2725	8075	6516	2892
1.2+1.8+1.8+1.8+3.5	12	18	7055	5240	1423	7990	6987	1689	7395	6449	1991	6970	6113	2199	6715	5845	2294	6290	5509	2462	6035	5240	2557
	14	20	7055	5240	1423	8585	6987	1689	7990	6516	2014	7480	6113	2223	7225	5912	2318	6715	5509	2486	6460	5307	2605
	16	22	7055	5576	1445	9180	6987	1711	8500	6516	2038	7990	6113	2247	7735	5912	2366	7225	5509	2533	6970	5307	2629
	18	25	7565	5979	1467	9775	7591	1734	9010	7054	2061	8500	6651	2271	8160	6382	2366	7650	5979	2557	7310	5710	2653
	19	27	7820	6181	1489	10115	7994	1756	9350	7390	2085	8840	6987	2294	8500	6718	2390	7990	6315	2557	7650	6046	2653
	22	30	8670	6113	1489	11220	7927	1756	10370	7323	2085	9775	6920	2318	9435	6651	2414	8500	6449	2653	7905	6315	2796
	24	32	9265	6113	1511	11985	7927	1778	11050	7323	2108	10455	6920	2318	10030	6651	2438	8840	6584	2725	8075	6516	2892

EWB : Evaporator Wet Bulb temperature (°C)
EDB : Evaporator Dry Bulb temperature (°C)
(°CDB) : Outdoor Unit Inlet Air Dry Temperature (°C)

TC : Total Capacity (W)
SHC : Sensible Heating Capacity (w)
PI : Power Input

	INDOOR		OUTDOOR TEMPERATURE (°CDB)																				
	EWB	EDB	-10			21			27			32			35			40			43		
	°C	°C	TC	SHC	PI	TC	SHC	PI	TC	SHC	PI	TC	SHC	PI	TC	SHC	PI	TC	SHC	PI	TC	SHC	PI
1.8+3.5+3.5+6.0	12	18	7470	5240	1506	8460	6987	1788	7830	6449	2107	7380	6113	2328	7110	5845	2429	6660	5509	2606	6390	5240	2707
	14	20	7470	5240	1506	9090	6987	1788	8460	6516	2132	7920	6113	2353	7650	5912	2454	7110	5509	2631	6840	5307	2758
	16	22	7470	5576	1529	9720	6987	1812	9000	6516	2157	8460	6113	2378	8190	5912	2505	7650	5509	2682	7380	5307	2783
	18	25	8010	5979	1553	10350	7591	1835	9540	7054	2182	9000	6651	2404	8640	6382	2505	8100	5979	2707	7740	5710	2808
	19	27	8280	6181	1576	10710	7994	1859	9900	7390	2207	9360	6987	2429	9000	6718	2530	8460	6315	2707	8100	6046	2808
	22	30	9180	6113	1576	11880	7927	1859	10980	7323	2207	10350	6920	2454	9990	6651	2555	9000	6449	2808	8370	6315	2960
	24	32	9810	6113	1600	12690	7927	1882	11700	7323	2231	11070	6920	2454	10620	6651	2581	9360	6584	2884	8550	6516	3061
1.8+3.5+5.0+5.0	12	18	7470	5240	1494	8460	6987	1774	7830	6449	2091	7380	6113	2309	7110	5845	2410	6660	5509	2585	6390	5240	2686
	14	20	7470	5240	1494	9090	6987	1774	8460	6516	2115	7920	6113	2334	7650	5912	2435	7110	5509	2610	6840	5307	2736
	16	22	7470	5576	1517	9720	6987	1797	9000	6516	2140	8460	6113	2359	8190	5912	2485	7650	5509	2661	7380	5307	2761
	18	25	8010	5979	1541	10350	7591	1821	9540	7054	2165	9000	6651	2385	8640	6382	2485	8100	5979	2686	7740	5710	2786
	19	27	8280	6181	1564	10710	7994	1844	9900	7390	2189	9360	6987	2410	9000	6718	2510	8460	6315	2686	8100	6046	2786
	22	30	9180	6113	1564	11880	7927	1844	10980	7323	2189	10350	6920	2435	9990	6651	2535	9000	6449	2786	8370	6315	2937
	24	32	9810	6113	1587	12690	7927	1867	11700	7323	2214	11070	6920	2435	10620	6651	2560	9360	6584	2861	8550	6516	3037
2.5+2.5+2.5+2.5	12	18	7470	5240	1506	8460	6987	1788	7830	6449	2107	7380	6113	2328	7110	5845	2429	6660	5509	2606	6390	5240	2707
	14	20	7470	5240	1506	9090	6987	1788	8460	6516	2132	7920	6113	2353	7650	5912	2454	7110	5509	2631	6840	5307	2758
	16	22	7470	5576	1529	9720	6987	1812	9000	6516	2157	8460	6113	2378	8190	5912	2505	7650	5509	2682	7380	5307	2783
	18	25	8010	5979	1553	10350	7591	1835	9540	7054	2182	9000	6651	2404	8640	6382	2505	8100	5979	2707	7740	5710	2808
	19	27	8280	6181	1576	10710	7994	1859	9900	7390	2207	9360	6987	2429	9000	6718	2530	8460	6315	2707	8100	6046	2808
	22	30	9180	6113	1576	11880	7927	1859	10980	7323	2207	10350	6920	2454	9990	6651	2555	9000	6449	2808	8370	6315	2960
	24	32	9810	6113	1600	12690	7927	1882	11700	7323	2231	11070	6920	2454	10620	6651	2581	9360	6584	2884	8550	6516	3061
2.5+2.5+2.5+3.5	12	18	7470	5240	1506	8460	6987	1788	7830	6449	2107	7380	6113	2328	7110	5845	2429	6660	5509	2606	6390	5240	2707
	14	20	7470	5240	1506	9090	6987	1788	8460	6516	2132	7920	6113	2353	7650	5912	2454	7110	5509	2631	6840	5307	2758
	16	22	7470	5576	1529	9720	6987	1812	9000	6516	2157	8460	6113	2378	8190	5912	2505	7650	5509	2682	7380	5307	2783
	18	25	8010	5979	1553	10350	7591	1835	9540	7054	2182	9000	6651	2404	8640	6382	2505	8100	5979	2707	7740	5710	2808
	19	27	8280	6181	1576	10710	7994	1859	9900	7390	2207	9360	6987	2429	9000	6718	2530	8460	6315	2707	8100	6046	2808
	22	30	9180	6113	1576	11880	7927	1859	10980	7323	2207	10350	6920	2454	9990	6651	2555	9000	6449	2808	8370	6315	2960
	24	32	9810	6113	1600	12690	7927	1882	11700	7323	2231	11070	6920	2454	10620	6651	2581	9360	6584	2884	8550	6516	3061
2.5+2.5+2.5+5.0	12	18	7470	5240	1506	8460	6987	1788	7830	6449	2107	7380	6113	2328	7110	5845	2429	6660	5509	2606	6390	5240	2707
	14	20	7470	5240	1506	9090	6987	1788	8460	6516	2132	7920	6113	2353	7650	5912	2454	7110	5509	2631	6840	5307	2758
	16	22	7470	5576	1529	9720	6987	1812	9000	6516	2157	8460	6113	2378	8190	5912	2505	7650	5509	2682	7380	5307	2783
	18	25	8010	5979	1553	10350	7591	1835	9540	7054	2182	9000	6651	2404	8640	6382	2505	8100	5979	2707	7740	5710	2808
	19	27	8280	6181	1576	10710	7994	1859	9900	7390	2207	9360	6987	2429	9000	6718	2530	8460	6315	2707	8100	6046	2808
	22	30	9180	6113	1576	11880	7927	1859	10980	7323	2207	10350	6920	2454	9990	6651	2555	9000	6449	2808	8370	6315	2960
	24	32	9810	6113	1600	12690	7927	1882	11700	7323	2231	11070	6920	2454	10620	6651	2581	9360	6584	2884	8550	6516	3061
2.5+2.5+2.5+6.0	12	18	7470	5240	1506	8460	6987	1788	7830	6449	2107	7380	6113	2328	7110	5845	2429	6660	5509	2606	6390	5240	2707
	14	20	7470	5240	1506	9090	6987	1788	8460	6516	2132	7920	6113	2353	7650	5912	2454	7110	5509	2631	6840	5307	2758
	16	22	7470	5576	1529	9720	6987	1812	9000	6516	2157	8460	6113	2378	8190	5912	2505	7650	5509	2682	7380	5307	2783
	18	25	8010	5979	1553	10350	7591	1835	9540	7054	2182	9000	6651	2404	8640	6382	2505	8100	5979	2707	7740	5710	2808
	19	27	8280	6181	1576	10710	7994	1859	9900	7390	2207	9360	6987	2429	9000	6718	2530	8460	6315	2707	8100	6046	2808
	22	30	9180	6113	1576	11880	7927	1859	10980	7323	2207	10350	6920	2454	9990	6651	2555	9000	6449	2808	8370	6315	2960
	24	32	9810	6113	1600	12690	7927	1882	11700	7323	2231	11070	6920	2454	10620	6651	2581	9360	6584	2884	8550	6516	3061
2.5+2.5+3.5+3.5	12	18	7470	5240	1506	8460	6987	1788	7830	6449	2107	7380	6113	2328	7110	5845	2429	6660	5509	2606	6390	5240	2707
	14	20	7470	5240	1506	9090	6987	1788	8460	6516	2132	7920	6113	2353	7650	5912	2454	7110	5509	2631	6840	5307	2758
	16	22	7470	5576	1529	9720	6987	1812	9000	6516	2157	8460	6113	2378	8190	5912	2505	7650	5509	2682	7380	5307	2783
	18	25	8010	5979	1553	10350	7591	1835	9540	7054	2182	9000	6651	2404	8640	6382	2505	8100	5979	2707	7740	5710	2808
	19	27	8280	6181	1576	10710	7994	1859	9900	7390	2207	9360	6987	2429	9000	6718	2530	8460	6315	2707	8100	6046	2808
	22	30	9180	6113	1576	11880	7927	1859	10980	7323	2207	10350	6920	2454	9990	6651	2555	9000	6449	2808	8370	6315	2960
	24	32	9810	6113	1600	12690	7927	1882	11700	7323	2231	11070	6920	2454	10620	6651	2581	9360	6584	2884	8550	6516	3061

EWB : Evaporator Wet Bulb temperature (°C)
EDB : Evaporator Dry Bulb temperature (°C)
(°CDB) : Outdoor Unit Inlet Air Dry Temperature (°C)

TC : Total Capacity (W)
SHC : Sensible Heating Capacity (w)
PI : Power Input

	INDOOR		OUTDOOR TEMPERATURE (°CDB)																				
	EWB	EDB	-10			21			27			32			35			40			43		
	°C	°C	TC	SHC	PI	TC	SHC	PI	TC	SHC	PI	TC	SHC	PI	TC	SHC	PI	TC	SHC	PI	TC	SHC	PI
2.5+2.5+3.5+5.0	12	18	7470	5240	1506	8460	6987	1788	7830	6449	2107	7380	6113	2328	7110	5845	2429	6660	5509	2606	6390	5240	2707
	14	20	7470	5240	1506	9090	6987	1788	8460	6516	2132	7920	6113	2353	7650	5912	2454	7110	5509	2631	6840	5307	2758
	16	22	7470	5576	1529	9720	6987	1812	9000	6516	2157	8460	6113	2378	8190	5912	2505	7650	5509	2682	7380	5307	2783
	18	25	8010	5979	1553	10350	7591	1835	9540	7054	2182	9000	6651	2404	8640	6382	2505	8100	5979	2707	7740	5710	2808
	19	27	8280	6181	1576	10710	7994	1859	9900	7390	2207	9360	6987	2429	9000	6718	2530	8460	6315	2707	8100	6046	2808
	22	30	9180	6113	1576	11880	7927	1859	10980	7323	2207	10350	6920	2454	9990	6651	2555	9000	6449	2808	8370	6315	2960
	24	32	9810	6113	1600	12690	7927	1882	11700	7323	2231	11070	6920	2454	10620	6651	2581	9360	6584	2884	8550	6516	3061
2.5+2.5+3.5+6.0	12	18	7470	5240	1506	8460	6987	1788	7830	6449	2107	7380	6113	2328	7110	5845	2429	6660	5509	2606	6390	5240	2707
	14	20	7470	5240	1506	9090	6987	1788	8460	6516	2132	7920	6113	2353	7650	5912	2454	7110	5509	2631	6840	5307	2758
	16	22	7470	5576	1529	9720	6987	1812	9000	6516	2157	8460	6113	2378	8190	5912	2505	7650	5509	2682	7380	5307	2783
	18	25	8010	5979	1553	10350	7591	1835	9540	7054	2182	9000	6651	2404	8640	6382	2505	8100	5979	2707	7740	5710	2808
	19	27	8280	6181	1576	10710	7994	1859	9900	7390	2207	9360	6987	2429	9000	6718	2530	8460	6315	2707	8100	6046	2808
	22	30	9180	6113	1576	11880	7927	1859	10980	7323	2207	10350	6920	2454	9990	6651	2555	9000	6449	2808	8370	6315	2960
	24	32	9810	6113	1600	12690	7927	1882	11700	7323	2231	11070	6920	2454	10620	6651	2581	9360	6584	2884	8550	6516	3061
2.5+2.5+5.0+5.0	12	18	7470	5240	1494	8460	6987	1774	7830	6449	2091	7380	6113	2309	7110	5845	2410	6660	5509	2585	6390	5240	2686
	14	20	7470	5240	1494	9090	6987	1774	8460	6516	2115	7920	6113	2334	7650	5912	2435	7110	5509	2610	6840	5307	2736
	16	22	7470	5576	1517	9720	6987	1797	9000	6516	2140	8460	6113	2359	8190	5912	2485	7650	5509	2661	7380	5307	2761
	18	25	8010	5979	1541	10350	7591	1821	9540	7054	2165	9000	6651	2385	8640	6382	2485	8100	5979	2686	7740	5710	2786
	19	27	8280	6181	1564	10710	7994	1844	9900	7390	2189	9360	6987	2410	9000	6718	2510	8460	6315	2686	8100	6046	2786
	22	30	9180	6113	1564	11880	7927	1844	10980	7323	2189	10350	6920	2435	9990	6651	2535	9000	6449	2786	8370	6315	2937
	24	32	9810	6113	1587	12690	7927	1867	11700	7323	2214	11070	6920	2435	10620	6651	2560	9360	6584	2861	8550	6516	3037
2.5+3.5+3.5+3.5	12	18	7470	5240	1506	8460	6987	1788	7830	6449	2107	7380	6113	2328	7110	5845	2429	6660	5509	2606	6390	5240	2707
	14	20	7470	5240	1506	9090	6987	1788	8460	6516	2132	7920	6113	2353	7650	5912	2454	7110	5509	2631	6840	5307	2758
	16	22	7470	5576	1529	9720	6987	1812	9000	6516	2157	8460	6113	2378	8190	5912	2505	7650	5509	2682	7380	5307	2783
	18	25	8010	5979	1553	10350	7591	1835	9540	7054	2182	9000	6651	2404	8640	6382	2505	8100	5979	2707	7740	5710	2808
	19	27	8280	6181	1576	10710	7994	1859	9900	7390	2207	9360	6987	2429	9000	6718	2530	8460	6315	2707	8100	6046	2808
	22	30	9180	6113	1576	11880	7927	1859	10980	7323	2207	10350	6920	2454	9990	6651	2555	9000	6449	2808	8370	6315	2960
	24	32	9810	6113	1600	12690	7927	1882	11700	7323	2231	11070	6920	2454	10620	6651	2581	9360	6584	2884	8550	6516	3061
2.5+3.5+3.5+5.0	12	18	7470	5240	1506	8460	6987	1788	7830	6449	2107	7380	6113	2328	7110	5845	2429	6660	5509	2606	6390	5240	2707
	14	20	7470	5240	1506	9090	6987	1788	8460	6516	2132	7920	6113	2353	7650	5912	2454	7110	5509	2631	6840	5307	2758
	16	22	7470	5576	1529	9720	6987	1812	9000	6516	2157	8460	6113	2378	8190	5912	2505	7650	5509	2682	7380	5307	2783
	18	25	8010	5979	1553	10350	7591	1835	9540	7054	2182	9000	6651	2404	8640	6382	2505	8100	5979	2707	7740	5710	2808
	19	27	8280	6181	1576	10710	7994	1859	9900	7390	2207	9360	6987	2429	9000	6718	2530	8460	6315	2707	8100	6046	2808
	22	30	9180	6113	1576	11880	7927	1859	10980	7323	2207	10350	6920	2454	9990	6651	2555	9000	6449	2808	8370	6315	2960
	24	32	9810	6113	1600	12690	7927	1882	11700	7323	2231	11070	6920	2454	10620	6651	2581	9360	6584	2884	8550	6516	3061
2.5+3.5+3.5+6.0	12	18	7470	5240	1506	8460	6987	1788	7830	6449	2107	7380	6113	2328	7110	5845	2429	6660	5509	2606	6390	5240	2707
	14	20	7470	5240	1506	9090	6987	1788	8460	6516	2132	7920	6113	2353	7650	5912	2454	7110	5509	2631	6840	5307	2758
	16	22	7470	5576	1529	9720	6987	1812	9000	6516	2157	8460	6113	2378	8190	5912	2505	7650	5509	2682	7380	5307	2783
	18	25	8010	5979	1553	10350	7591	1835	9540	7054	2182	9000	6651	2404	8640	6382	2505	8100	5979	2707	7740	5710	2808
	19	27	8280	6181	1576	10710	7994	1859	9900	7390	2207	9360	6987	2429	9000	6718	2530	8460	6315	2707	8100	6046	2808
	22	30	9180	6113	1576	11880	7927	1859	10980	7323	2207	10350	6920	2454	9990	6651	2555	9000	6449	2808	8370	6315	2960
	24	32	9810	6113	1600	12690	7927	1882	11700	7323	2231	11070	6920	2454	10620	6651	2581	9360	6584	2884	8550	6516	3061
3.5+3.5+3.5+3.5	12	18	7470	5240	1506	8460	6987	1788	7830	6449	2107	7380	6113	2328	7110	5845	2429	6660	5509	2606	6390	5240	2707
	14	20	7470	5240	1506	9090	6987	1788	8460	6516	2132	7920	6113	2353	7650	5912	2454	7110	5509	2631	6840	5307	2758
	16	22	7470	5576	1529	9720	6987	1812	9000	6516	2157	8460	6113	2378	8190	5912	2505	7650	5509	2682	7380	5307	2783
	18	25	8010	5979	1553	10350	7591	1835	9540	7054	2182	9000	6651	2404	8640	6382	2505	8100	5979	2707	7740	5710	2808
	19	27	8280	6181	1576	10710	7994	1859	9900	7390	2207	9360	6987	2429	9000	6718	2530	8460	6315	2707	8100	6046	2808
	22	30	9180	6113	1576	11880	7927	1859	10980	7323	2207	10350	6920	2454	9990	6651	2555	9000	6449	2808	8370	6315	2960
	24	32	9810	6113	1600	12690	7927	1882	11700	7323	2231	11070	6920	2454	10620	6651	2581	9360	6584	2884	8550	6516	3061

EWB : Evaporator Wet Bulb temperature (°C)
EDB : Evaporator Dry Bulb temperature (°C)
(°CDB) : Outdoor Unit Inlet Air Dry Temperature (°C)

TC : Total Capacity (W)
SHC : Sensible Heating Capacity (w)
PI : Power Input

	INDOOR		OUTDOOR TEMPERATURE (°CDB)																				
	EWB	EDB	-10			21			27			32			35			40			43		
	°C	°C	TC	SHC	PI	TC	SHC	PI	TC	SHC	PI	TC	SHC	PI	TC	SHC	PI	TC	SHC	PI	TC	SHC	PI
3.5+3.5+3.5+5.0	12	18	7470	5240	1506	8460	6987	1788	7830	6449	2107	7380	6113	2328	7110	5845	2429	6660	5509	2606	6390	5240	2707
	14	20	7470	5240	1506	9090	6987	1788	8460	6516	2132	7920	6113	2353	7650	5912	2454	7110	5509	2631	6840	5307	2758
	16	22	7470	5576	1529	9720	6987	1812	9000	6516	2157	8460	6113	2378	8190	5912	2505	7650	5509	2682	7380	5307	2783
	18	25	8010	5979	1553	10350	7591	1835	9540	7054	2182	9000	6651	2404	8640	6382	2505	8100	5979	2707	7740	5710	2808
	19	27	8280	6181	1576	10710	7994	1859	9900	7390	2207	9360	6987	2429	9000	6718	2530	8460	6315	2707	8100	6046	2808
	22	30	9180	6113	1576	11880	7927	1859	10980	7323	2207	10350	6920	2454	9990	6651	2555	9000	6449	2808	8370	6315	2960
	24	32	9810	6113	1600	12690	7927	1882	11700	7323	2231	11070	6920	2454	10620	6651	2581	9360	6584	2884	8550	6516	3061
1.2+1.2+1.2+1.2+1.2	12	18	4980	3493	1054	5640	4658	1251	5220	4300	1474	4920	4076	1628	4740	3896	1699	4440	3673	1823	4260	3493	1894
	14	20	4980	3493	1054	6060	4658	1251	5640	4344	1492	5280	4076	1646	5100	3941	1717	4740	3673	1841	4560	3538	1929
	16	22	4980	3717	1070	6480	4658	1267	6000	4344	1509	5640	4076	1664	5460	3941	1752	5100	3673	1876	4920	3538	1947
	18	25	5340	3986	1086	6900	5061	1284	6360	4703	1526	6000	4434	1682	5760	4255	1752	5400	3986	1894	5160	3807	1965
	19	27	5520	4120	1103	7140	5330	1300	6600	4927	1544	6240	4658	1699	6000	4479	1770	5640	4210	1894	5400	4031	1965
	22	30	6120	4076	1103	7920	5285	1300	7320	4882	1544	6900	4613	1717	6660	4434	1788	6000	4300	1965	5580	4210	2071
	24	32	6540	4076	1119	8460	5285	1317	7800	4882	1561	7380	4613	1717	7080	4434	1805	6240	4389	2018	5700	4344	2142
1.2+1.2+1.2+1.2+1.8	12	18	5478	3843	1101	6204	5124	1308	5742	4729	1541	5412	4483	1702	5214	4286	1776	4884	4040	1906	4686	3843	1980
	14	20	5478	3843	1101	6666	5124	1308	6204	4779	1559	5808	4483	1721	5610	4335	1795	5214	4040	1924	5016	3892	2017
	16	22	5478	4089	1118	7128	5124	1325	6600	4779	1577	6204	4483	1739	6006	4335	1832	5610	4040	1961	5412	3892	2035
	18	25	5874	4385	1136	7590	5567	1342	6996	5173	1595	6600	4877	1758	6336	4680	1832	5940	4385	1980	5676	4188	2054
	19	27	6072	4532	1153	7854	5863	1359	7260	5419	1614	6864	5124	1776	6600	4927	1850	6204	4631	1980	5940	4434	2054
	22	30	6732	4483	1153	8712	5813	1359	8052	5370	1614	7590	5074	1795	7326	4877	1869	6600	4729	2054	6138	4631	2165
	24	32	7194	4483	1170	9306	5813	1376	8580	5370	1632	8118	5074	1795	7788	4877	1887	6864	4828	2109	6270	4779	2239
1.2+1.2+1.2+1.2+2.5	12	18	6059	4250	1161	6862	5667	1378	6351	5231	1624	5986	4959	1794	5767	4741	1872	5402	4468	2009	5183	4250	2087
	14	20	6059	4250	1161	7373	5667	1378	6862	5286	1643	6424	4959	1814	6205	4795	1892	5767	4468	2028	5548	4305	2126
	16	22	6059	4523	1179	7884	5667	1396	7300	5286	1663	6862	4959	1833	6643	4795	1931	6205	4468	2067	5986	4305	2145
	18	25	6497	4850	1197	8395	6157	1415	7738	5721	1682	7300	5395	1853	7008	5177	1931	6570	4850	2087	6278	4632	2165
	19	27	6716	5013	1215	8687	6484	1433	8030	5994	1701	7592	5667	1872	7300	5449	1950	6862	5122	2087	6570	4904	2165
	22	30	7446	4959	1215	9636	6430	1433	8906	5939	1701	8395	5613	1892	8103	5395	1970	7300	5231	2165	6789	5122	2282
	24	32	7957	4959	1233	10293	6430	1451	9490	5939	1720	8979	5613	1892	8614	5395	1989	7592	5340	2223	6935	5286	2360
1.2+1.2+1.2+1.2+3.5	12	18	6889	4832	1542	7802	6443	1831	7221	5948	2157	6806	5638	2383	6557	5390	2486	6142	5080	2668	5893	4832	2771
	14	20	6889	4832	1542	8383	6443	1831	7802	6010	2183	7304	5638	2409	7055	5452	2512	6557	5080	2694	6308	4894	2823
	16	22	6889	5142	1566	8964	6443	1855	8300	6010	2208	7802	5638	2435	7553	5452	2564	7055	5080	2745	6806	4894	2849
	18	25	7387	5514	1590	9545	7001	1879	8798	6505	2234	8300	6134	2461	7968	5886	2564	7470	5514	2771	7138	5266	2875
	19	27	7636	5700	1614	9877	7373	1903	9130	6815	2259	8632	6443	2486	8300	6195	2590	7802	5824	2771	7470	5576	2875
	22	30	8466	5638	1614	10956	7311	1903	10126	6753	2259	9545	6381	2512	9213	6134	2616	8300	5948	2875	7719	5824	3030
	24	32	9047	5638	1638	11703	7311	1927	10790	6753	2284	10209	6381	2512	9794	6134	2642	8632	6072	2953	7885	6010	3134
1.2+1.2+1.2+1.2+5.0	12	18	7470	5240	1506	8460	6987	1788	7830	6449	2107	7380	6113	2328	7110	5845	2429	6660	5509	2606	6390	5240	2707
	14	20	7470	5240	1506	9090	6987	1788	8460	6516	2132	7920	6113	2353	7650	5912	2454	7110	5509	2631	6840	5307	2758
	16	22	7470	5576	1529	9720	6987	1812	9000	6516	2157	8460	6113	2378	8190	5912	2505	7650	5509	2682	7380	5307	2783
	18	25	8010	5979	1553	10350	7591	1835	9540	7054	2182	9000	6651	2404	8640	6382	2505	8100	5979	2707	7740	5710	2808
	19	27	8280	6181	1576	10710	7994	1859	9900	7390	2207	9360	6987	2429	9000	6718	2530	8460	6315	2707	8100	6046	2808
	22	30	9180	6113	1576	11880	7927	1859	10980	7323	2207	10350	6920	2454	9990	6651	2555	9000	6449	2808	8370	6315	2960
	24	32	9810	6113	1600	12690	7927	1882	11700	7323	2231	11070	6920	2454	10620	6651	2581	9360	6584	2884	8550	6516	3061
1.2+1.2+1.2+1.2+6.0	12	18	7470	5240	1506	8460	6987	1788	7830	6449	2107	7380	6113	2328	7110	5845	2429	6660	5509	2606	6390	5240	2707
	14	20	7470	5240	1506	9090	6987	1788	8460	6516	2132	7920	6113	2353	7650	5912	2454	7110	5509	2631	6840	5307	2758
	16	22	7470	5576	1529	9720	6987	1812	9000	6516	2157	8460	6113	2378	8190	5912	2505	7650	5509	2682	7380	5307	2783
	18	25	8010	5979	1553	10350	7591	1835	9540	7054	2182	9000	6651	2404	8640	6382	2505	8100	5979	2707	7740	5710	2808
	19	27	8280	6181	1576	10710	7994	1859	9900	7390	2207	9360	6987	2429	9000	6718	2530	8460	6315	2707	8100	6046	2808
	22	30	9180	6113	1576	11880	7927	1859	10980	7323	2207	10350	6920	2454	9990	6651	2555	9000	6449	2808	8370	6315	2960
	24	32	9810	6113	1600	12690	7927	1882	11700	7323	2231	11070	6920	2454	10620	6651	2581	9360	6584	2884	8550	6516	3061

EWB : Evaporator Wet Bulb temperature (°C)
EDB : Evaporator Dry Bulb temperature (°C)
(°CDB) : Outdoor Unit Inlet Air Dry Temperature (°C)

TC : Total Capacity (W)
SHC : Sensible Heating Capacity (w)
PI : Power Input

	INDOOR		OUTDOOR TEMPERATURE (°CDB)																				
	EWB	EDB	-10			21			27			32			35			40			43		
	°C	°C	TC	SHC	PI	TC	SHC	PI	TC	SHC	PI	TC	SHC	PI	TC	SHC	PI	TC	SHC	PI	TC	SHC	PI
1.2+1.2+1.2+1.8+1.8	12	18	5976	4192	1167	6768	5589	1385	6264	5159	1633	5904	4891	1803	5688	4676	1882	5328	4407	2019	5112	4192	2097
	14	20	5976	4192	1167	7272	5589	1385	6768	5213	1652	6336	4891	1823	6120	4729	1901	5688	4407	2038	5472	4246	2136
	16	22	5976	4461	1185	7776	5589	1404	7200	5213	1671	6768	4891	1842	6552	4729	1940	6120	4407	2078	5904	4246	2156
	18	25	6408	4783	1203	8280	6073	1422	7632	5643	1690	7200	5321	1862	6912	5106	1940	6480	4783	2097	6192	4568	2176
	19	27	6624	4944	1221	8568	6396	1440	7920	5912	1710	7488	5589	1882	7200	5374	1960	6768	5052	2097	6480	4837	2176
	22	30	7344	4891	1221	9504	6342	1440	8784	5858	1710	8280	5536	1901	7992	5321	1980	7200	5159	2176	6696	5052	2293
	24	32	7848	4891	1240	10152	6342	1458	9360	5858	1729	8856	5536	1901	8496	5321	1999	7488	5267	2234	6840	5213	2372
1.2+1.2+1.2+1.8+2.5	12	18	6557	4600	1309	7426	6133	1555	6873	5661	1833	6478	5366	2024	6241	5130	2112	5846	4835	2266	5609	4600	2354
	14	20	6557	4600	1309	7979	6133	1555	7426	5720	1854	6952	5366	2046	6715	5189	2134	6241	4835	2288	6004	4659	2398
	16	22	6557	4894	1330	8532	6133	1575	7900	5720	1876	7426	5366	2068	7189	5189	2178	6715	4835	2332	6478	4659	2420
	18	25	7031	5248	1350	9085	6664	1596	8374	6192	1897	7900	5838	2090	7584	5602	2178	7110	5248	2354	6794	5012	2442
	19	27	7268	5425	1371	9401	7017	1616	8690	6487	1919	8216	6133	2112	7900	5897	2200	7426	5543	2354	7110	5307	2442
	22	30	8058	5366	1371	10428	6958	1616	9638	6428	1919	9085	6074	2134	8769	5838	2222	7900	5661	2442	7347	5543	2574
	24	32	8611	5366	1391	11139	6958	1637	10270	6428	1940	9717	6074	2134	9322	5838	2244	8216	5779	2508	7505	5720	2662
1.2+1.2+1.2+1.8+3.5	12	18	7387	5182	1488	8366	6909	1767	7743	6378	2083	7298	6045	2300	7031	5780	2400	6586	5448	2575	6319	5182	2675
	14	20	7387	5182	1488	8989	6909	1767	8366	6444	2107	7832	6045	2325	7565	5846	2425	7031	5448	2600	6764	5248	2725
	16	22	7387	5514	1511	9612	6909	1790	8900	6444	2132	8366	6045	2350	8099	5846	2475	7565	5448	2650	7298	5248	2750
	18	25	7921	5913	1535	10235	7507	1814	9434	6976	2156	8900	6577	2375	8544	6311	2475	8010	5913	2675	7654	5647	2775
	19	27	8188	6112	1558	10591	7906	1837	9790	7308	2181	9256	6909	2400	8900	6643	2500	8366	6245	2675	8010	5979	2775
	22	30	9078	6045	1558	11748	7839	1837	10858	7241	2181	10235	6843	2425	9879	6577	2525	8900	6378	2775	8277	6245	2925
	24	32	9701	6045	1581	12549	7839	1860	11570	7241	2205	10947	6843	2425	10502	6577	2550	9256	6510	2850	8455	6444	3025
1.2+1.2+1.2+1.8+5.0	12	18	7470	5240	1506	8460	6987	1788	7830	6449	2107	7380	6113	2328	7110	5845	2429	6660	5509	2606	6390	5240	2707
	14	20	7470	5240	1506	9090	6987	1788	8460	6516	2132	7920	6113	2353	7650	5912	2454	7110	5509	2631	6840	5307	2758
	16	22	7470	5576	1529	9720	6987	1812	9000	6516	2157	8460	6113	2378	8190	5912	2505	7650	5509	2682	7380	5307	2783
	18	25	8010	5979	1553	10350	7591	1835	9540	7054	2182	9000	6651	2404	8640	6382	2505	8100	5979	2707	7740	5710	2808
	19	27	8280	6181	1576	10710	7994	1859	9900	7390	2207	9360	6987	2429	9000	6718	2530	8460	6315	2707	8100	6046	2808
	22	30	9180	6113	1576	11880	7927	1859	10980	7323	2207	10350	6920	2454	9990	6651	2555	9000	6449	2808	8370	6315	2960
	24	32	9810	6113	1600	12690	7927	1882	11700	7323	2231	11070	6920	2454	10620	6651	2581	9360	6584	2884	8550	6516	3061
1.2+1.2+1.2+1.8+6.0	12	18	7470	5240	1506	8460	6987	1788	7830	6449	2107	7380	6113	2328	7110	5845	2429	6660	5509	2606	6390	5240	2707
	14	20	7470	5240	1506	9090	6987	1788	8460	6516	2132	7920	6113	2353	7650	5912	2454	7110	5509	2631	6840	5307	2758
	16	22	7470	5576	1529	9720	6987	1812	9000	6516	2157	8460	6113	2378	8190	5912	2505	7650	5509	2682	7380	5307	2783
	18	25	8010	5979	1553	10350	7591	1835	9540	7054	2182	9000	6651	2404	8640	6382	2505	8100	5979	2707	7740	5710	2808
	19	27	8280	6181	1576	10710	7994	1859	9900	7390	2207	9360	6987	2429	9000	6718	2530	8460	6315	2707	8100	6046	2808
	22	30	9180	6113	1576	11880	7927	1859	10980	7323	2207	10350	6920	2454	9990	6651	2555	9000	6449	2808	8370	6315	2960
	24	32	9810	6113	1600	12690	7927	1882	11700	7323	2231	11070	6920	2454	10620	6651	2581	9360	6584	2884	8550	6516	3061
1.2+1.2+1.2+2.5+2.5	12	18	7138	5007	1476	8084	6676	1753	7482	6163	2066	7052	5842	2282	6794	5585	2381	6364	5264	2554	6106	5007	2654
	14	20	7138	5007	1476	8686	6676	1753	8084	6227	2090	7568	5842	2306	7310	5649	2406	6794	5264	2579	6536	5071	2703
	16	22	7138	5328	1499	9288	6676	1776	8600	6227	2114	8084	5842	2331	7826	5649	2455	7310	5264	2629	7052	5071	2728
	18	25	7654	5713	1522	9890	7254	1799	9116	6740	2139	8600	6355	2356	8256	6098	2455	7740	5713	2654	7396	5457	2753
	19	27	7912	5906	1545	10234	7639	1822	9460	7061	2163	8944	6676	2381	8600	6419	2480	8084	6034	2654	7740	5777	2753
	22	30	8772	5842	1545	11352	7575	1822	10492	6997	2163	9890	6612	2406	9546	6355	2505	8600	6163	2753	7998	6034	2902
	24	32	9374	5842	1568	12126	7575	1845	11180	6997	2187	10578	6612	2406	10148	6355	2530	8944	6291	2827	8170	6227	3001
1.2+1.2+1.2+2.5+3.5	12	18	7470	5240	1506	8460	6987	1788	7830	6449	2107	7380	6113	2328	7110	5845	2429	6660	5509	2606	6390	5240	2707
	14	20	7470	5240	1506	9090	6987	1788	8460	6516	2132	7920	6113	2353	7650	5912	2454	7110	5509	2631	6840	5307	2758
	16	22	7470	5576	1529	9720	6987	1812	9000	6516	2157	8460	6113	2378	8190	5912	2505	7650	5509	2682	7380	5307	2783
	18	25	8010	5979	1553	10350	7591	1835	9540	7054	2182	9000	6651	2404	8640	6382	2505	8100	5979	2707	7740	5710	2808
	19	27	8280	6181	1576	10710	7994	1859	9900	7390	2207	9360	6987	2429	9000	6718	2530	8460	6315	2707	8100	6046	2808
	22	30	9180	6113	1576	11880	7927	1859	10980	7323	2207	10350	6920	2454	9990	6651	2555	9000	6449	2808	8370	6315	2960
	24	32	9810	6113	1600	12690	7927	1882	11700	7323	2231	11070	6920	2454	10620	6651	2581	9360	6584	2884	8550	6516	3061

EWB : Evaporator Wet Bulb temperature (°C)
EDB : Evaporator Dry Bulb temperature (°C)
(°CDB) : Outdoor Unit Inlet Air Dry Temperature (°C)

TC : Total Capacity (W)
SHC : Sensible Heating Capacity (w)
PI : Power Input

	INDOOR		OUTDOOR TEMPERATURE (°CDB)																				
	EWB	EDB	-10			21			27			32			35			40			43		
	°C	°C	TC	SHC	PI	TC	SHC	PI	TC	SHC	PI	TC	SHC	PI	TC	SHC	PI	TC	SHC	PI	TC	SHC	PI
1.2+1.2+1.2+2.5+5.0	12	18	7470	5240	1506	8460	6987	1788	7830	6449	2107	7380	6113	2328	7110	5845	2429	6660	5509	2606	6390	5240	2707
	14	20	7470	5240	1506	9090	6987	1788	8460	6516	2132	7920	6113	2353	7650	5912	2454	7110	5509	2631	6840	5307	2758
	16	22	7470	5576	1529	9720	6987	1812	9000	6516	2157	8460	6113	2378	8190	5912	2505	7650	5509	2682	7380	5307	2783
	18	25	8010	5979	1553	10350	7591	1835	9540	7054	2182	9000	6651	2404	8640	6382	2505	8100	5979	2707	7740	5710	2808
	19	27	8280	6181	1576	10710	7994	1859	9900	7390	2207	9360	6987	2429	9000	6718	2530	8460	6315	2707	8100	6046	2808
	22	30	9180	6113	1576	11880	7927	1859	10980	7323	2207	10350	6920	2454	9990	6651	2555	9000	6449	2808	8370	6315	2960
	24	32	9810	6113	1600	12690	7927	1882	11700	7323	2231	11070	6920	2454	10620	6651	2581	9360	6584	2884	8550	6516	3061
1.2+1.2+1.2+2.5+6.0	12	18	7470	5240	1506	8460	6987	1788	7830	6449	2107	7380	6113	2328	7110	5845	2429	6660	5509	2606	6390	5240	2707
	14	20	7470	5240	1506	9090	6987	1788	8460	6516	2132	7920	6113	2353	7650	5912	2454	7110	5509	2631	6840	5307	2758
	16	22	7470	5576	1529	9720	6987	1812	9000	6516	2157	8460	6113	2378	8190	5912	2505	7650	5509	2682	7380	5307	2783
	18	25	8010	5979	1553	10350	7591	1835	9540	7054	2182	9000	6651	2404	8640	6382	2505	8100	5979	2707	7740	5710	2808
	19	27	8280	6181	1576	10710	7994	1859	9900	7390	2207	9360	6987	2429	9000	6718	2530	8460	6315	2707	8100	6046	2808
	22	30	9180	6113	1576	11880	7927	1859	10980	7323	2207	10350	6920	2454	9990	6651	2555	9000	6449	2808	8370	6315	2960
	24	32	9810	6113	1600	12690	7927	1882	11700	7323	2231	11070	6920	2454	10620	6651	2581	9360	6584	2884	8550	6516	3061
1.2+1.2+1.2+3.5+3.5	12	18	7470	5240	1506	8460	6987	1788	7830	6449	2107	7380	6113	2328	7110	5845	2429	6660	5509	2606	6390	5240	2707
	14	20	7470	5240	1506	9090	6987	1788	8460	6516	2132	7920	6113	2353	7650	5912	2454	7110	5509	2631	6840	5307	2758
	16	22	7470	5576	1529	9720	6987	1812	9000	6516	2157	8460	6113	2378	8190	5912	2505	7650	5509	2682	7380	5307	2783
	18	25	8010	5979	1553	10350	7591	1835	9540	7054	2182	9000	6651	2404	8640	6382	2505	8100	5979	2707	7740	5710	2808
	19	27	8280	6181	1576	10710	7994	1859	9900	7390	2207	9360	6987	2429	9000	6718	2530	8460	6315	2707	8100	6046	2808
	22	30	9180	6113	1576	11880	7927	1859	10980	7323	2207	10350	6920	2454	9990	6651	2555	9000	6449	2808	8370	6315	2960
	24	32	9810	6113	1600	12690	7927	1882	11700	7323	2231	11070	6920	2454	10620	6651	2581	9360	6584	2884	8550	6516	3061
1.2+1.2+1.2+3.5+5.0	12	18	7470	5240	1506	8460	6987	1788	7830	6449	2107	7380	6113	2328	7110	5845	2429	6660	5509	2606	6390	5240	2707
	14	20	7470	5240	1506	9090	6987	1788	8460	6516	2132	7920	6113	2353	7650	5912	2454	7110	5509	2631	6840	5307	2758
	16	22	7470	5576	1529	9720	6987	1812	9000	6516	2157	8460	6113	2378	8190	5912	2505	7650	5509	2682	7380	5307	2783
	18	25	8010	5979	1553	10350	7591	1835	9540	7054	2182	9000	6651	2404	8640	6382	2505	8100	5979	2707	7740	5710	2808
	19	27	8280	6181	1576	10710	7994	1859	9900	7390	2207	9360	6987	2429	9000	6718	2530	8460	6315	2707	8100	6046	2808
	22	30	9180	6113	1576	11880	7927	1859	10980	7323	2207	10350	6920	2454	9990	6651	2555	9000	6449	2808	8370	6315	2960
	24	32	9810	6113	1600	12690	7927	1882	11700	7323	2231	11070	6920	2454	10620	6651	2581	9360	6584	2884	8550	6516	3061
1.2+1.2+1.2+3.5+6.0	12	18	7470	5240	1506	8460	6987	1788	7830	6449	2107	7380	6113	2328	7110	5845	2429	6660	5509	2606	6390	5240	2707
	14	20	7470	5240	1506	9090	6987	1788	8460	6516	2132	7920	6113	2353	7650	5912	2454	7110	5509	2631	6840	5307	2758
	16	22	7470	5576	1529	9720	6987	1812	9000	6516	2157	8460	6113	2378	8190	5912	2505	7650	5509	2682	7380	5307	2783
	18	25	8010	5979	1553	10350	7591	1835	9540	7054	2182	9000	6651	2404	8640	6382	2505	8100	5979	2707	7740	5710	2808
	19	27	8280	6181	1576	10710	7994	1859	9900	7390	2207	9360	6987	2429	9000	6718	2530	8460	6315	2707	8100	6046	2808
	22	30	9180	6113	1576	11880	7927	1859	10980	7323	2207	10350	6920	2454	9990	6651	2555	9000	6449	2808	8370	6315	2960
	24	32	9810	6113	1600	12690	7927	1882	11700	7323	2231	11070	6920	2454	10620	6651	2581	9360	6584	2884	8550	6516	3061
1.2+1.2+1.2+5.0+5.0	12	18	7470	5240	1506	8460	6987	1788	7830	6449	2107	7380	6113	2328	7110	5845	2429	6660	5509	2606	6390	5240	2707
	14	20	7470	5240	1506	9090	6987	1788	8460	6516	2132	7920	6113	2353	7650	5912	2454	7110	5509	2631	6840	5307	2758
	16	22	7470	5576	1529	9720	6987	1812	9000	6516	2157	8460	6113	2378	8190	5912	2505	7650	5509	2682	7380	5307	2783
	18	25	8010	5979	1553	10350	7591	1835	9540	7054	2182	9000	6651	2404	8640	6382	2505	8100	5979	2707	7740	5710	2808
	19	27	8280	6181	1576	10710	7994	1859	9900	7390	2207	9360	6987	2429	9000	6718	2530	8460	6315	2707	8100	6046	2808
	22	30	9180	6113	1576	11880	7927	1859	10980	7323	2207	10350	6920	2454	9990	6651	2555	9000	6449	2808	8370	6315	2960
	24	32	9810	6113	1600	12690	7927	1882	11700	7323	2231	11070	6920	2454	10620	6651	2581	9360	6584	2884	8550	6516	3061
1.2+1.2+1.2+5.0+6.0	12	18	7470	5240	1506	8460	6987	1788	7830	6449	2107	7380	6113	2328	7110	5845	2429	6660	5509	2606	6390	5240	2707
	14	20	7470	5240	1506	9090	6987	1788	8460	6516	2132	7920	6113	2353	7650	5912	2454	7110	5509	2631	6840	5307	2758
	16	22	7470	5576	1529	9720	6987	1812	9000	6516	2157	8460	6113	2378	8190	5912	2505	7650	5509	2682	7380	5307	2783
	18	25	8010	5979	1553	10350	7591	1835	9540	7054	2182	9000	6651	2404	8640	6382	2505	8100	5979	2707	7740	5710	2808
	19	27	8280	6181	1576	10710	7994	1859	9900	7390	2207	9360	6987	2429	9000	6718	2530	8460	6315	2707	8100	6046	2808
	22	30	9180	6113	1576	11880	7927	1859	10980	7323	2207	10350	6920	2454	9990	6651	2555	9000	6449	2808	8370	6315	2960
	24	32	9810	6113	1600	12690	7927	1882	11700	7323	2231	11070	6920	2454	10620	6651	2581	9360	6584	2884	8550	6516	3061

EWB : Evaporator Wet Bulb temperature (°C)
EDB : Evaporator Dry Bulb temperature (°C)
(°CDB) : Outdoor Unit Inlet Air Dry Temperature (°C)

TC : Total Capacity (W)
SHC : Sensible Heating Capacity (w)
PI : Power Input

	INDOOR		OUTDOOR TEMPERATURE (°CDB)																				
	EWB	EDB	-10			21			27			32			35			40			43		
	°C	°C	TC	SHC	PI	TC	SHC	PI	TC	SHC	PI	TC	SHC	PI	TC	SHC	PI	TC	SHC	PI	TC	SHC	PI
1.2+1.2+1.8+1.8+1.8	12	18	6474	4541	1298	7332	6055	1541	6786	5589	1816	6396	5298	2006	6162	5065	2093	5772	4774	2245	5538	4541	2333
	14	20	6474	4541	1298	7878	6055	1541	7332	5648	1837	6864	5298	2027	6630	5124	2115	6162	4774	2267	5928	4600	2376
	16	22	6474	4832	1318	8424	6055	1561	7800	5648	1859	7332	5298	2049	7098	5124	2158	6630	4774	2311	6396	4600	2398
	18	25	6942	5182	1338	8970	6579	1581	8268	6113	1880	7800	5764	2071	7488	5531	2158	7020	5182	2333	6708	4949	2420
	19	27	7176	5356	1358	9282	6928	1602	8580	6404	1901	8112	6055	2093	7800	5822	2180	7332	5473	2333	7020	5240	2420
	22	30	7956	5298	1358	10296	6870	1602	9516	6346	1901	8970	5997	2115	8658	5764	2202	7800	5589	2420	7254	5473	2551
	24	32	8502	5298	1379	10998	6870	1622	10140	6346	1923	9594	5997	2115	9204	5764	2224	8112	5706	2485	7410	5648	2638
1.2+1.2+1.8+1.8+2.5	12	18	7055	4949	1482	7990	6599	1760	7395	6091	2074	6970	5774	2291	6715	5520	2390	6290	5203	2565	6035	4949	2664
	14	20	7055	4949	1482	8585	6599	1760	7990	6154	2099	7480	5774	2316	7225	5583	2415	6715	5203	2590	6460	5012	2714
	16	22	7055	5266	1505	9180	6599	1783	8500	6154	2123	7990	5774	2341	7735	5583	2465	7225	5203	2639	6970	5012	2739
	18	25	7565	5647	1528	9775	7170	1806	9010	6662	2147	8500	6281	2366	8160	6028	2465	7650	5647	2664	7310	5393	2764
	19	27	7820	5837	1552	10115	7550	1829	9350	6979	2172	8840	6599	2390	8500	6345	2490	7990	5964	2664	7650	5710	2764
	22	30	8670	5774	1552	11220	7487	1829	10370	6916	2172	9775	6535	2415	9435	6281	2515	8500	6091	2764	7905	5964	2913
	24	32	9265	5774	1575	11985	7487	1853	11050	6916	2196	10455	6535	2415	10030	6281	2540	8840	6218	2839	8075	6154	3013
1.2+1.2+1.8+1.8+3.5	12	18	7470	5240	1506	8460	6987	1788	7830	6449	2107	7380	6113	2328	7110	5845	2429	6660	5509	2606	6390	5240	2707
	14	20	7470	5240	1506	9090	6987	1788	8460	6516	2132	7920	6113	2353	7650	5912	2454	7110	5509	2631	6840	5307	2758
	16	22	7470	5576	1529	9720	6987	1812	9000	6516	2157	8460	6113	2378	8190	5912	2505	7650	5509	2682	7380	5307	2783
	18	25	8010	5979	1553	10350	7591	1835	9540	7054	2182	9000	6651	2404	8640	6382	2505	8100	5979	2707	7740	5710	2808
	19	27	8280	6181	1576	10710	7994	1859	9900	7390	2207	9360	6987	2429	9000	6718	2530	8460	6315	2707	8100	6046	2808
	22	30	9180	6113	1576	11880	7927	1859	10980	7323	2207	10350	6920	2454	9990	6651	2555	9000	6449	2808	8370	6315	2960
	24	32	9810	6113	1600	12690	7927	1882	11700	7323	2231	11070	6920	2454	10620	6651	2581	9360	6584	2884	8550	6516	3061
1.2+1.2+1.8+1.8+5.0	12	18	7470	5240	1506	8460	6987	1788	7830	6449	2107	7380	6113	2328	7110	5845	2429	6660	5509	2606	6390	5240	2707
	14	20	7470	5240	1506	9090	6987	1788	8460	6516	2132	7920	6113	2353	7650	5912	2454	7110	5509	2631	6840	5307	2758
	16	22	7470	5576	1529	9720	6987	1812	9000	6516	2157	8460	6113	2378	8190	5912	2505	7650	5509	2682	7380	5307	2783
	18	25	8010	5979	1553	10350	7591	1835	9540	7054	2182	9000	6651	2404	8640	6382	2505	8100	5979	2707	7740	5710	2808
	19	27	8280	6181	1576	10710	7994	1859	9900	7390	2207	9360	6987	2429	9000	6718	2530	8460	6315	2707	8100	6046	2808
	22	30	9180	6113	1576	11880	7927	1859	10980	7323	2207	10350	6920	2454	9990	6651	2555	9000	6449	2808	8370	6315	2960
	24	32	9810	6113	1600	12690	7927	1882	11700	7323	2231	11070	6920	2454	10620	6651	2581	9360	6584	2884	8550	6516	3061
1.2+1.2+1.8+1.8+6.0	12	18	7470	5240	1506	8460	6987	1788	7830	6449	2107	7380	6113	2328	7110	5845	2429	6660	5509	2606	6390	5240	2707
	14	20	7470	5240	1506	9090	6987	1788	8460	6516	2132	7920	6113	2353	7650	5912	2454	7110	5509	2631	6840	5307	2758
	16	22	7470	5576	1529	9720	6987	1812	9000	6516	2157	8460	6113	2378	8190	5912	2505	7650	5509	2682	7380	5307	2783
	18	25	8010	5979	1553	10350	7591	1835	9540	7054	2182	9000	6651	2404	8640	6382	2505	8100	5979	2707	7740	5710	2808
	19	27	8280	6181	1576	10710	7994	1859	9900	7390	2207	9360	6987	2429	9000	6718	2530	8460	6315	2707	8100	6046	2808
	22	30	9180	6113	1576	11880	7927	1859	10980	7323	2207	10350	6920	2454	9990	6651	2555	9000	6449	2808	8370	6315	2960
	24	32	9810	6113	1600	12690	7927	1882	11700	7323	2231	11070	6920	2454	10620	6651	2581	9360	6584	2884	8550	6516	3061
1.2+1.2+1.8+2.5+2.5	12	18	7470	5240	1506	8460	6987	1788	7830	6449	2107	7380	6113	2328	7110	5845	2429	6660	5509	2606	6390	5240	2707
	14	20	7470	5240	1506	9090	6987	1788	8460	6516	2132	7920	6113	2353	7650	5912	2454	7110	5509	2631	6840	5307	2758
	16	22	7470	5576	1529	9720	6987	1812	9000	6516	2157	8460	6113	2378	8190	5912	2505	7650	5509	2682	7380	5307	2783
	18	25	8010	5979	1553	10350	7591	1835	9540	7054	2182	9000	6651	2404	8640	6382	2505	8100	5979	2707	7740	5710	2808
	19	27	8280	6181	1576	10710	7994	1859	9900	7390	2207	9360	6987	2429	9000	6718	2530	8460	6315	2707	8100	6046	2808
	22	30	9180	6113	1576	11880	7927	1859	10980	7323	2207	10350	6920	2454	9990	6651	2555	9000	6449	2808	8370	6315	2960
	24	32	9810	6113	1600	12690	7927	1882	11700	7323	2231	11070	6920	2454	10620	6651	2581	9360	6584	2884	8550	6516	3061
1.2+1.2+1.8+2.5+3.5	12	18	7470	5240	1506	8460	6987	1788	7830	6449	2107	7380	6113	2328	7110	5845	2429	6660	5509	2606	6390	5240	2707
	14	20	7470	5240	1506	9090	6987	1788	8460	6516	2132	7920	6113	2353	7650	5912	2454	7110	5509	2631	6840	5307	2758
	16	22	7470	5576	1529	9720	6987	1812	9000	6516	2157	8460	6113	2378	8190	5912	2505	7650	5509	2682	7380	5307	2783
	18	25	8010	5979	1553	10350	7591	1835	9540	7054	2182	9000	6651	2404	8640	6382	2505	8100	5979	2707	7740	5710	2808
	19	27	8280	6181	1576	10710	7994	1859	9900	7390	2207	9360	6987	2429	9000	6718	2530	8460	6315	2707	8100	6046	2808
	22	30	9180	6113	1576	11880	7927	1859	10980	7323	2207	10350	6920	2454	9990	6651	2555	9000	6449	2808	8370	6315	2960
	24	32	9810	6113	1600	12690	7927	1882	11700	7323	2231	11070	6920	2454	10620	6651	2581	9360	6584	2884	8550	6516	3061

EWB : Evaporator Wet Bulb temperature (°C)
EDB : Evaporator Dry Bulb temperature (°C)
(°CDB) : Outdoor Unit Inlet Air Dry Temperature (°C)

TC : Total Capacity (W)
SHC : Sensible Heating Capacity (w)
PI : Power Input

	INDOOR		OUTDOOR TEMPERATURE (°CDB)																				
	EWB	EDB	-10			21			27			32			35			40			43		
	°C	°C	TC	SHC	PI	TC	SHC	PI	TC	SHC	PI	TC	SHC	PI	TC	SHC	PI	TC	SHC	PI	TC	SHC	PI
1.2+1.2+1.8+2.5+5.0	12	18	7470	5240	1506	8460	6987	1788	7830	6449	2107	7380	6113	2328	7110	5845	2429	6660	5509	2606	6390	5240	2707
	14	20	7470	5240	1506	9090	6987	1788	8460	6516	2132	7920	6113	2353	7650	5912	2454	7110	5509	2631	6840	5307	2758
	16	22	7470	5576	1529	9720	6987	1812	9000	6516	2157	8460	6113	2378	8190	5912	2505	7650	5509	2682	7380	5307	2783
	18	25	8010	5979	1553	10350	7591	1835	9540	7054	2182	9000	6651	2404	8640	6382	2505	8100	5979	2707	7740	5710	2808
	19	27	8280	6181	1576	10710	7994	1859	9900	7390	2207	9360	6987	2429	9000	6718	2530	8460	6315	2707	8100	6046	2808
	22	30	9180	6113	1576	11880	7927	1859	10980	7323	2207	10350	6920	2454	9990	6651	2555	9000	6449	2808	8370	6315	2960
	24	32	9810	6113	1600	12690	7927	1882	11700	7323	2231	11070	6920	2454	10620	6651	2581	9360	6584	2884	8550	6516	3061
1.2+1.2+1.8+2.5+6.0	12	18	7470	5240	1506	8460	6987	1788	7830	6449	2107	7380	6113	2328	7110	5845	2429	6660	5509	2606	6390	5240	2707
	14	20	7470	5240	1506	9090	6987	1788	8460	6516	2132	7920	6113	2353	7650	5912	2454	7110	5509	2631	6840	5307	2758
	16	22	7470	5576	1529	9720	6987	1812	9000	6516	2157	8460	6113	2378	8190	5912	2505	7650	5509	2682	7380	5307	2783
	18	25	8010	5979	1553	10350	7591	1835	9540	7054	2182	9000	6651	2404	8640	6382	2505	8100	5979	2707	7740	5710	2808
	19	27	8280	6181	1576	10710	7994	1859	9900	7390	2207	9360	6987	2429	9000	6718	2530	8460	6315	2707	8100	6046	2808
	22	30	9180	6113	1576	11880	7927	1859	10980	7323	2207	10350	6920	2454	9990	6651	2555	9000	6449	2808	8370	6315	2960
	24	32	9810	6113	1600	12690	7927	1882	11700	7323	2231	11070	6920	2454	10620	6651	2581	9360	6584	2884	8550	6516	3061
1.2+1.2+1.8+3.5+3.5	12	18	7470	5240	1506	8460	6987	1788	7830	6449	2107	7380	6113	2328	7110	5845	2429	6660	5509	2606	6390	5240	2707
	14	20	7470	5240	1506	9090	6987	1788	8460	6516	2132	7920	6113	2353	7650	5912	2454	7110	5509	2631	6840	5307	2758
	16	22	7470	5576	1529	9720	6987	1812	9000	6516	2157	8460	6113	2378	8190	5912	2505	7650	5509	2682	7380	5307	2783
	18	25	8010	5979	1553	10350	7591	1835	9540	7054	2182	9000	6651	2404	8640	6382	2505	8100	5979	2707	7740	5710	2808
	19	27	8280	6181	1576	10710	7994	1859	9900	7390	2207	9360	6987	2429	9000	6718	2530	8460	6315	2707	8100	6046	2808
	22	30	9180	6113	1576	11880	7927	1859	10980	7323	2207	10350	6920	2454	9990	6651	2555	9000	6449	2808	8370	6315	2960
	24	32	9810	6113	1600	12690	7927	1882	11700	7323	2231	11070	6920	2454	10620	6651	2581	9360	6584	2884	8550	6516	3061
1.2+1.2+1.8+3.5+5.0	12	18	7470	5240	1506	8460	6987	1788	7830	6449	2107	7380	6113	2328	7110	5845	2429	6660	5509	2606	6390	5240	2707
	14	20	7470	5240	1506	9090	6987	1788	8460	6516	2132	7920	6113	2353	7650	5912	2454	7110	5509	2631	6840	5307	2758
	16	22	7470	5576	1529	9720	6987	1812	9000	6516	2157	8460	6113	2378	8190	5912	2505	7650	5509	2682	7380	5307	2783
	18	25	8010	5979	1553	10350	7591	1835	9540	7054	2182	9000	6651	2404	8640	6382	2505	8100	5979	2707	7740	5710	2808
	19	27	8280	6181	1576	10710	7994	1859	9900	7390	2207	9360	6987	2429	9000	6718	2530	8460	6315	2707	8100	6046	2808
	22	30	9180	6113	1576	11880	7927	1859	10980	7323	2207	10350	6920	2454	9990	6651	2555	9000	6449	2808	8370	6315	2960
	24	32	9810	6113	1600	12690	7927	1882	11700	7323	2231	11070	6920	2454	10620	6651	2581	9360	6584	2884	8550	6516	3061
1.2+1.2+1.8+3.5+6.0	12	18	7470	5240	1506	8460	6987	1788	7830	6449	2107	7380	6113	2328	7110	5845	2429	6660	5509	2606	6390	5240	2707
	14	20	7470	5240	1506	9090	6987	1788	8460	6516	2132	7920	6113	2353	7650	5912	2454	7110	5509	2631	6840	5307	2758
	16	22	7470	5576	1529	9720	6987	1812	9000	6516	2157	8460	6113	2378	8190	5912	2505	7650	5509	2682	7380	5307	2783
	18	25	8010	5979	1553	10350	7591	1835	9540	7054	2182	9000	6651	2404	8640	6382	2505	8100	5979	2707	7740	5710	2808
	19	27	8280	6181	1576	10710	7994	1859	9900	7390	2207	9360	6987	2429	9000	6718	2530	8460	6315	2707	8100	6046	2808
	22	30	9180	6113	1576	11880	7927	1859	10980	7323	2207	10350	6920	2454	9990	6651	2555	9000	6449	2808	8370	6315	2960
	24	32	9810	6113	1600	12690	7927	1882	11700	7323	2231	11070	6920	2454	10620	6651	2581	9360	6584	2884	8550	6516	3061
1.2+1.2+1.8+5.0+5.0	12	18	7470	5240	1506	8460	6987	1788	7830	6449	2107	7380	6113	2328	7110	5845	2429	6660	5509	2606	6390	5240	2707
	14	20	7470	5240	1506	9090	6987	1788	8460	6516	2132	7920	6113	2353	7650	5912	2454	7110	5509	2631	6840	5307	2758
	16	22	7470	5576	1529	9720	6987	1812	9000	6516	2157	8460	6113	2378	8190	5912	2505	7650	5509	2682	7380	5307	2783
	18	25	8010	5979	1553	10350	7591	1835	9540	7054	2182	9000	6651	2404	8640	6382	2505	8100	5979	2707	7740	5710	2808
	19	27	8280	6181	1576	10710	7994	1859	9900	7390	2207	9360	6987	2429	9000	6718	2530	8460	6315	2707	8100	6046	2808
	22	30	9180	6113	1576	11880	7927	1859	10980	7323	2207	10350	6920	2454	9990	6651	2555	9000	6449	2808	8370	6315	2960
	24	32	9810	6113	1600	12690	7927	1882	11700	7323	2231	11070	6920	2454	10620	6651	2581	9360	6584	2884	8550	6516	3061
1.2+1.2+1.8+5.0+6.0	12	18	7470	5240	1506	8460	6987	1788	7830	6449	2107	7380	6113	2328	7110	5845	2429	6660	5509	2606	6390	5240	2707
	14	20	7470	5240	1506	9090	6987	1788	8460	6516	2132	7920	6113	2353	7650	5912	2454	7110	5509	2631	6840	5307	2758
	16	22	7470	5576	1529	9720	6987	1812	9000	6516	2157	8460	6113	2378	8190	5912	2505	7650	5509	2682	7380	5307	2783
	18	25	8010	5979	1553	10350	7591	1835	9540	7054	2182	9000	6651	2404	8640	6382	2505	8100	5979	2707	7740	5710	2808
	19	27	8280	6181	1576	10710	7994	1859	9900	7390	2207	9360	6987	2429	9000	6718	2530	8460	6315	2707	8100	6046	2808
	22	30	9180	6113	1576	11880	7927	1859	10980	7323	2207	10350	6920	2454	9990	6651	2555	9000	6449	2808	8370	6315	2960
	24	32	9810	6113	1600	12690	7927	1882	11700	7323	2231	11070	6920	2454	10620	6651	2581	9360	6584	2884	8550	6516	3061

EWB : Evaporator Wet Bulb temperature (°C)
EDB : Evaporator Dry Bulb temperature (°C)
(°CDB) : Outdoor Unit Inlet Air Dry Temperature (°C)

TC : Total Capacity (W)
SHC : Sensible Heating Capacity (w)
PI : Power Input

	INDOOR		OUTDOOR TEMPERATURE (°CDB)																				
	EWB	EDB	-10			21			27			32			35			40			43		
	°C	°C	TC	SHC	PI	TC	SHC	PI	TC	SHC	PI	TC	SHC	PI	TC	SHC	PI	TC	SHC	PI	TC	SHC	PI
1.2+1.2+2.5+2.5+2.5	12	18	7470	5240	1506	8460	6987	1788	7830	6449	2107	7380	6113	2328	7110	5845	2429	6660	5509	2606	6390	5240	2707
	14	20	7470	5240	1506	9090	6987	1788	8460	6516	2132	7920	6113	2353	7650	5912	2454	7110	5509	2631	6840	5307	2758
	16	22	7470	5576	1529	9720	6987	1812	9000	6516	2157	8460	6113	2378	8190	5912	2505	7650	5509	2682	7380	5307	2783
	18	25	8010	5979	1553	10350	7591	1835	9540	7054	2182	9000	6651	2404	8640	6382	2505	8100	5979	2707	7740	5710	2808
	19	27	8280	6181	1576	10710	7994	1859	9900	7390	2207	9360	6987	2429	9000	6718	2530	8460	6315	2707	8100	6046	2808
	22	30	9180	6113	1576	11880	7927	1859	10980	7323	2207	10350	6920	2454	9990	6651	2555	9000	6449	2808	8370	6315	2960
	24	32	9810	6113	1600	12690	7927	1882	11700	7323	2231	11070	6920	2454	10620	6651	2581	9360	6584	2884	8550	6516	3061
1.2+1.2+2.5+2.5+3.5	12	18	7470	5240	1506	8460	6987	1788	7830	6449	2107	7380	6113	2328	7110	5845	2429	6660	5509	2606	6390	5240	2707
	14	20	7470	5240	1506	9090	6987	1788	8460	6516	2132	7920	6113	2353	7650	5912	2454	7110	5509	2631	6840	5307	2758
	16	22	7470	5576	1529	9720	6987	1812	9000	6516	2157	8460	6113	2378	8190	5912	2505	7650	5509	2682	7380	5307	2783
	18	25	8010	5979	1553	10350	7591	1835	9540	7054	2182	9000	6651	2404	8640	6382	2505	8100	5979	2707	7740	5710	2808
	19	27	8280	6181	1576	10710	7994	1859	9900	7390	2207	9360	6987	2429	9000	6718	2530	8460	6315	2707	8100	6046	2808
	22	30	9180	6113	1576	11880	7927	1859	10980	7323	2207	10350	6920	2454	9990	6651	2555	9000	6449	2808	8370	6315	2960
	24	32	9810	6113	1600	12690	7927	1882	11700	7323	2231	11070	6920	2454	10620	6651	2581	9360	6584	2884	8550	6516	3061
1.2+1.2+2.5+2.5+5.0	12	18	7470	5240	1506	8460	6987	1788	7830	6449	2107	7380	6113	2328	7110	5845	2429	6660	5509	2606	6390	5240	2707
	14	20	7470	5240	1506	9090	6987	1788	8460	6516	2132	7920	6113	2353	7650	5912	2454	7110	5509	2631	6840	5307	2758
	16	22	7470	5576	1529	9720	6987	1812	9000	6516	2157	8460	6113	2378	8190	5912	2505	7650	5509	2682	7380	5307	2783
	18	25	8010	5979	1553	10350	7591	1835	9540	7054	2182	9000	6651	2404	8640	6382	2505	8100	5979	2707	7740	5710	2808
	19	27	8280	6181	1576	10710	7994	1859	9900	7390	2207	9360	6987	2429	9000	6718	2530	8460	6315	2707	8100	6046	2808
	22	30	9180	6113	1576	11880	7927	1859	10980	7323	2207	10350	6920	2454	9990	6651	2555	9000	6449	2808	8370	6315	2960
	24	32	9810	6113	1600	12690	7927	1882	11700	7323	2231	11070	6920	2454	10620	6651	2581	9360	6584	2884	8550	6516	3061
1.2+1.2+2.5+2.5+6.0	12	18	7470	5240	1506	8460	6987	1788	7830	6449	2107	7380	6113	2328	7110	5845	2429	6660	5509	2606	6390	5240	2707
	14	20	7470	5240	1506	9090	6987	1788	8460	6516	2132	7920	6113	2353	7650	5912	2454	7110	5509	2631	6840	5307	2758
	16	22	7470	5576	1529	9720	6987	1812	9000	6516	2157	8460	6113	2378	8190	5912	2505	7650	5509	2682	7380	5307	2783
	18	25	8010	5979	1553	10350	7591	1835	9540	7054	2182	9000	6651	2404	8640	6382	2505	8100	5979	2707	7740	5710	2808
	19	27	8280	6181	1576	10710	7994	1859	9900	7390	2207	9360	6987	2429	9000	6718	2530	8460	6315	2707	8100	6046	2808
	22	30	9180	6113	1576	11880	7927	1859	10980	7323	2207	10350	6920	2454	9990	6651	2555	9000	6449	2808	8370	6315	2960
	24	32	9810	6113	1600	12690	7927	1882	11700	7323	2231	11070	6920	2454	10620	6651	2581	9360	6584	2884	8550	6516	3061
1.2+1.2+2.5+3.5+3.5	12	18	7470	5240	1506	8460	6987	1788	7830	6449	2107	7380	6113	2328	7110	5845	2429	6660	5509	2606	6390	5240	2707
	14	20	7470	5240	1506	9090	6987	1788	8460	6516	2132	7920	6113	2353	7650	5912	2454	7110	5509	2631	6840	5307	2758
	16	22	7470	5576	1529	9720	6987	1812	9000	6516	2157	8460	6113	2378	8190	5912	2505	7650	5509	2682	7380	5307	2783
	18	25	8010	5979	1553	10350	7591	1835	9540	7054	2182	9000	6651	2404	8640	6382	2505	8100	5979	2707	7740	5710	2808
	19	27	8280	6181	1576	10710	7994	1859	9900	7390	2207	9360	6987	2429	9000	6718	2530	8460	6315	2707	8100	6046	2808
	22	30	9180	6113	1576	11880	7927	1859	10980	7323	2207	10350	6920	2454	9990	6651	2555	9000	6449	2808	8370	6315	2960
	24	32	9810	6113	1600	12690	7927	1882	11700	7323	2231	11070	6920	2454	10620	6651	2581	9360	6584	2884	8550	6516	3061
1.2+1.2+2.5+3.5+5.0	12	18	7470	5240	1506	8460	6987	1788	7830	6449	2107	7380	6113	2328	7110	5845	2429	6660	5509	2606	6390	5240	2707
	14	20	7470	5240	1506	9090	6987	1788	8460	6516	2132	7920	6113	2353	7650	5912	2454	7110	5509	2631	6840	5307	2758
	16	22	7470	5576	1529	9720	6987	1812	9000	6516	2157	8460	6113	2378	8190	5912	2505	7650	5509	2682	7380	5307	2783
	18	25	8010	5979	1553	10350	7591	1835	9540	7054	2182	9000	6651	2404	8640	6382	2505	8100	5979	2707	7740	5710	2808
	19	27	8280	6181	1576	10710	7994	1859	9900	7390	2207	9360	6987	2429	9000	6718	2530	8460	6315	2707	8100	6046	2808
	22	30	9180	6113	1576	11880	7927	1859	10980	7323	2207	10350	6920	2454	9990	6651	2555	9000	6449	2808	8370	6315	2960
	24	32	9810	6113	1600	12690	7927	1882	11700	7323	2231	11070	6920	2454	10620	6651	2581	9360	6584	2884	8550	6516	3061
1.2+1.2+2.5+3.5+6.0	12	18	7470	5240	1506	8460	6987	1788	7830	6449	2107	7380	6113	2328	7110	5845	2429	6660	5509	2606	6390	5240	2707
	14	20	7470	5240	1506	9090	6987	1788	8460	6516	2132	7920	6113	2353	7650	5912	2454	7110	5509	2631	6840	5307	2758
	16	22	7470	5576	1529	9720	6987	1812	9000	6516	2157	8460	6113	2378	8190	5912	2505	7650	5509	2682	7380	5307	2783
	18	25	8010	5979	1553	10350	7591	1835	9540	7054	2182	9000	6651	2404	8640	6382	2505	8100	5979	2707	7740	5710	2808
	19	27	8280	6181	1576	10710	7994	1859	9900	7390	2207	9360	6987	2429	9000	6718	2530	8460	6315	2707	8100	6046	2808
	22	30	9180	6113	1576	11880	7927	1859	10980	7323	2207	10350	6920	2454	9990	6651	2555	9000	6449	2808	8370	6315	2960
	24	32	9810	6113	1600	12690	7927	1882	11700	7323	2231	11070	6920	2454	10620	6651	2581	9360	6584	2884	8550	6516	3061

EWB : Evaporator Wet Bulb temperature (°C)
EDB : Evaporator Dry Bulb temperature (°C)
(°CDB) : Outdoor Unit Inlet Air Dry Temperature (°C)

TC : Total Capacity (W)
SHC : Sensible Heating Capacity (w)
PI : Power Input

	INDOOR		OUTDOOR TEMPERATURE (°CDB)																				
	EWB	EDB	-10			21			27			32			35			40			43		
	°C	°C	TC	SHC	PI	TC	SHC	PI	TC	SHC	PI	TC	SHC	PI	TC	SHC	PI	TC	SHC	PI	TC	SHC	PI
1.2+1.2+2.5+5.0+5.0	12	18	7470	5240	1506	8460	6987	1788	7830	6449	2107	7380	6113	2328	7110	5845	2429	6660	5509	2606	6390	5240	2707
	14	20	7470	5240	1506	9090	6987	1788	8460	6516	2132	7920	6113	2353	7650	5912	2454	7110	5509	2631	6840	5307	2758
	16	22	7470	5576	1529	9720	6987	1812	9000	6516	2157	8460	6113	2378	8190	5912	2505	7650	5509	2682	7380	5307	2783
	18	25	8010	5979	1553	10350	7591	1835	9540	7054	2182	9000	6651	2404	8640	6382	2505	8100	5979	2707	7740	5710	2808
	19	27	8280	6181	1576	10710	7994	1859	9900	7390	2207	9360	6987	2429	9000	6718	2530	8460	6315	2707	8100	6046	2808
	22	30	9180	6113	1576	11880	7927	1859	10980	7323	2207	10350	6920	2454	9990	6651	2555	9000	6449	2808	8370	6315	2960
	24	32	9810	6113	1600	12690	7927	1882	11700	7323	2231	11070	6920	2454	10620	6651	2581	9360	6584	2884	8550	6516	3061
1.2+1.2+3.5+3.5+3.5	12	18	7470	5240	1506	8460	6987	1788	7830	6449	2107	7380	6113	2328	7110	5845	2429	6660	5509	2606	6390	5240	2707
	14	20	7470	5240	1506	9090	6987	1788	8460	6516	2132	7920	6113	2353	7650	5912	2454	7110	5509	2631	6840	5307	2758
	16	22	7470	5576	1529	9720	6987	1812	9000	6516	2157	8460	6113	2378	8190	5912	2505	7650	5509	2682	7380	5307	2783
	18	25	8010	5979	1553	10350	7591	1835	9540	7054	2182	9000	6651	2404	8640	6382	2505	8100	5979	2707	7740	5710	2808
	19	27	8280	6181	1576	10710	7994	1859	9900	7390	2207	9360	6987	2429	9000	6718	2530	8460	6315	2707	8100	6046	2808
	22	30	9180	6113	1576	11880	7927	1859	10980	7323	2207	10350	6920	2454	9990	6651	2555	9000	6449	2808	8370	6315	2960
	24	32	9810	6113	1600	12690	7927	1882	11700	7323	2231	11070	6920	2454	10620	6651	2581	9360	6584	2884	8550	6516	3061
1.2+1.2+3.5+3.5+5.0	12	18	7470	5240	1506	8460	6987	1788	7830	6449	2107	7380	6113	2328	7110	5845	2429	6660	5509	2606	6390	5240	2707
	14	20	7470	5240	1506	9090	6987	1788	8460	6516	2132	7920	6113	2353	7650	5912	2454	7110	5509	2631	6840	5307	2758
	16	22	7470	5576	1529	9720	6987	1812	9000	6516	2157	8460	6113	2378	8190	5912	2505	7650	5509	2682	7380	5307	2783
	18	25	8010	5979	1553	10350	7591	1835	9540	7054	2182	9000	6651	2404	8640	6382	2505	8100	5979	2707	7740	5710	2808
	19	27	8280	6181	1576	10710	7994	1859	9900	7390	2207	9360	6987	2429	9000	6718	2530	8460	6315	2707	8100	6046	2808
	22	30	9180	6113	1576	11880	7927	1859	10980	7323	2207	10350	6920	2454	9990	6651	2555	9000	6449	2808	8370	6315	2960
	24	32	9810	6113	1600	12690	7927	1882	11700	7323	2231	11070	6920	2454	10620	6651	2581	9360	6584	2884	8550	6516	3061
1.2+1.2+3.5+3.5+6.0	12	18	7470	5240	1506	8460	6987	1788	7830	6449	2107	7380	6113	2328	7110	5845	2429	6660	5509	2606	6390	5240	2707
	14	20	7470	5240	1506	9090	6987	1788	8460	6516	2132	7920	6113	2353	7650	5912	2454	7110	5509	2631	6840	5307	2758
	16	22	7470	5576	1529	9720	6987	1812	9000	6516	2157	8460	6113	2378	8190	5912	2505	7650	5509	2682	7380	5307	2783
	18	25	8010	5979	1553	10350	7591	1835	9540	7054	2182	9000	6651	2404	8640	6382	2505	8100	5979	2707	7740	5710	2808
	19	27	8280	6181	1576	10710	7994	1859	9900	7390	2207	9360	6987	2429	9000	6718	2530	8460	6315	2707	8100	6046	2808
	22	30	9180	6113	1576	11880	7927	1859	10980	7323	2207	10350	6920	2454	9990	6651	2555	9000	6449	2808	8370	6315	2960
	24	32	9810	6113	1600	12690	7927	1882	11700	7323	2231	11070	6920	2454	10620	6651	2581	9360	6584	2884	8550	6516	3061
1.2+1.8+1.8+1.8+1.8	12	18	6972	4891	1506	7896	6521	1788	7308	6019	2107	6888	5706	2328	6636	5455	2429	6216	5142	2606	6964	4891	2707
	14	20	6972	4891	1506	8484	6521	1788	7896	6082	2132	7392	5706	2353	7140	5518	2454	6636	5142	2631	6384	4953	2758
	16	22	6972	5204	1529	9072	6521	1812	8400	6082	2157	7896	5706	2378	7644	5518	2505	7140	5142	2682	6888	4953	2783
	18	25	7476	5580	1553	9660	7085	1835	8904	6584	2182	8400	6207	2404	8064	5957	2505	7560	5580	2707	7224	5330	2808
	19	27	7728	5769	1576	9996	7461	1859	9240	6897	2207	8736	6521	2429	8400	6270	2530	7896	5894	2707	7560	5643	2808
	22	30	8568	5706	1576	11088	7399	1859	10248	6834	2207	9660	6458	2454	9324	6207	2555	8400	6019	2808	7812	5894	2960
	24	32	9156	5706	1600	11844	7399	1882	10920	6834	2231	10332	6458	2454	9912	6207	2581	8736	6145	2884	7980	6082	3061
1.2+1.8+1.8+1.8+2.5	12	18	7470	5240	1506	8460	6987	1788	7830	6449	2107	7380	6113	2328	7110	5845	2429	6660	5509	2606	6390	5240	2707
	14	20	7470	5240	1506	9090	6987	1788	8460	6516	2132	7920	6113	2353	7650	5912	2454	7110	5509	2631	6840	5307	2758
	16	22	7470	5576	1529	9720	6987	1812	9000	6516	2157	8460	6113	2378	8190	5912	2505	7650	5509	2682	7380	5307	2783
	18	25	8010	5979	1553	10350	7591	1835	9540	7054	2182	9000	6651	2404	8640	6382	2505	8100	5979	2707	7740	5710	2808
	19	27	8280	6181	1576	10710	7994	1859	9900	7390	2207	9360	6987	2429	9000	6718	2530	8460	6315	2707	8100	6046	2808
	22	30	9180	6113	1576	11880	7927	1859	10980	7323	2207	10350	6920	2454	9990	6651	2555	9000	6449	2808	8370	6315	2960
	24	32	9810	6113	1600	12690	7927	1882	11700	7323	2231	11070	6920	2454	10620	6651	2581	9360	6584	2884	8550	6516	3061
1.2+1.8+1.8+1.8+3.5	12	18	7470	5240	1506	8460	6987	1788	7830	6449	2107	7380	6113	2328	7110	5845	2429	6660	5509	2606	6390	5240	2707
	14	20	7470	5240	1506	9090	6987	1788	8460	6516	2132	7920	6113	2353	7650	5912	2454	7110	5509	2631	6840	5307	2758
	16	22	7470	5576	1529	9720	6987	1812	9000	6516	2157	8460	6113	2378	8190	5912	2505	7650	5509	2682	7380	5307	2783
	18	25	8010	5979	1553	10350	7591	1835	9540	7054	2182	9000	6651	2404	8640	6382	2505	8100	5979	2707	7740	5710	2808
	19	27	8280	6181	1576	10710	7994	1859	9900	7390	2207	9360	6987	2429	9000	6718	2530	8460	6315	2707	8100	6046	2808
	22	30	9180	6113	1576	11880	7927	1859	10980	7323	2207	10350	6920	2454	9990	6651	2555	9000	6449	2808	8370	6315	2960
	24	32	9810	6113	1600	12690	7927	1882	11700	7323	2231	11070	6920	2454	10620	6651	2581	9360	6584	2884	8550	6516	3061

EWB : Evaporator Wet Bulb temperature (°C)
EDB : Evaporator Dry Bulb temperature (°C)
(°CDB) : Outdoor Unit Inlet Air Dry Temperature (°C)

TC : Total Capacity (W)
SHC : Sensible Heating Capacity (w)
PI : Power Input

	INDOOR		OUTDOOR TEMPERATURE (°CDB)																				
	EWB	EDB	-10			21			27			32			35			40			43		
	°C	°C	TC	SHC	PI	TC	SHC	PI	TC	SHC	PI	TC	SHC	PI	TC	SHC	PI	TC	SHC	PI	TC	SHC	PI
1.2+1.8+1.8+1.8+5.0	12	18	7470	5240	1506	8460	6987	1788	7830	6449	2107	7380	6113	2328	7110	5845	2429	6660	5509	2606	6390	5240	2707
	14	20	7470	5240	1506	9090	6987	1788	8460	6516	2132	7920	6113	2353	7650	5912	2454	7110	5509	2631	6840	5307	2758
	16	22	7470	5576	1529	9720	6987	1812	9000	6516	2157	8460	6113	2378	8190	5912	2505	7650	5509	2682	7380	5307	2783
	18	25	8010	5979	1553	10350	7591	1835	9540	7054	2182	9000	6651	2404	8640	6382	2505	8100	5979	2707	7740	5710	2808
	19	27	8280	6181	1576	10710	7994	1859	9900	7390	2207	9360	6987	2429	9000	6718	2530	8460	6315	2707	8100	6046	2808
	22	30	9180	6113	1576	11880	7927	1859	10980	7323	2207	10350	6920	2454	9990	6651	2555	9000	6449	2808	8370	6315	2960
	24	32	9810	6113	1600	12690	7927	1882	11700	7323	2231	11070	6920	2454	10620	6651	2581	9360	6584	2884	8550	6516	3061
1.2+1.8+1.8+1.8+6.0	12	18	7470	5240	1506	8460	6987	1788	7830	6449	2107	7380	6113	2328	7110	5845	2429	6660	5509	2606	6390	5240	2707
	14	20	7470	5240	1506	9090	6987	1788	8460	6516	2132	7920	6113	2353	7650	5912	2454	7110	5509	2631	6840	5307	2758
	16	22	7470	5576	1529	9720	6987	1812	9000	6516	2157	8460	6113	2378	8190	5912	2505	7650	5509	2682	7380	5307	2783
	18	25	8010	5979	1553	10350	7591	1835	9540	7054	2182	9000	6651	2404	8640	6382	2505	8100	5979	2707	7740	5710	2808
	19	27	8280	6181	1576	10710	7994	1859	9900	7390	2207	9360	6987	2429	9000	6718	2530	8460	6315	2707	8100	6046	2808
	22	30	9180	6113	1576	11880	7927	1859	10980	7323	2207	10350	6920	2454	9990	6651	2555	9000	6449	2808	8370	6315	2960
	24	32	9810	6113	1600	12690	7927	1882	11700	7323	2231	11070	6920	2454	10620	6651	2581	9360	6584	2884	8550	6516	3061
1.2+1.8+1.8+2.5+2.5	12	18	7470	5240	1506	8460	6987	1788	7830	6449	2107	7380	6113	2328	7110	5845	2429	6660	5509	2606	6390	5240	2707
	14	20	7470	5240	1506	9090	6987	1788	8460	6516	2132	7920	6113	2353	7650	5912	2454	7110	5509	2631	6840	5307	2758
	16	22	7470	5576	1529	9720	6987	1812	9000	6516	2157	8460	6113	2378	8190	5912	2505	7650	5509	2682	7380	5307	2783
	18	25	8010	5979	1553	10350	7591	1835	9540	7054	2182	9000	6651	2404	8640	6382	2505	8100	5979	2707	7740	5710	2808
	19	27	8280	6181	1576	10710	7994	1859	9900	7390	2207	9360	6987	2429	9000	6718	2530	8460	6315	2707	8100	6046	2808
	22	30	9180	6113	1576	11880	7927	1859	10980	7323	2207	10350	6920	2454	9990	6651	2555	9000	6449	2808	8370	6315	2960
	24	32	9810	6113	1600	12690	7927	1882	11700	7323	2231	11070	6920	2454	10620	6651	2581	9360	6584	2884	8550	6516	3061
1.2+1.8+1.8+2.5+3.5	12	18	7470	5240	1506	8460	6987	1788	7830	6449	2107	7380	6113	2328	7110	5845	2429	6660	5509	2606	6390	5240	2707
	14	20	7470	5240	1506	9090	6987	1788	8460	6516	2132	7920	6113	2353	7650	5912	2454	7110	5509	2631	6840	5307	2758
	16	22	7470	5576	1529	9720	6987	1812	9000	6516	2157	8460	6113	2378	8190	5912	2505	7650	5509	2682	7380	5307	2783
	18	25	8010	5979	1553	10350	7591	1835	9540	7054	2182	9000	6651	2404	8640	6382	2505	8100	5979	2707	7740	5710	2808
	19	27	8280	6181	1576	10710	7994	1859	9900	7390	2207	9360	6987	2429	9000	6718	2530	8460	6315	2707	8100	6046	2808
	22	30	9180	6113	1576	11880	7927	1859	10980	7323	2207	10350	6920	2454	9990	6651	2555	9000	6449	2808	8370	6315	2960
	24	32	9810	6113	1600	12690	7927	1882	11700	7323	2231	11070	6920	2454	10620	6651	2581	9360	6584	2884	8550	6516	3061
1.2+1.8+1.8+2.5+5.0	12	18	7470	5240	1506	8460	6987	1788	7830	6449	2107	7380	6113	2328	7110	5845	2429	6660	5509	2606	6390	5240	2707
	14	20	7470	5240	1506	9090	6987	1788	8460	6516	2132	7920	6113	2353	7650	5912	2454	7110	5509	2631	6840	5307	2758
	16	22	7470	5576	1529	9720	6987	1812	9000	6516	2157	8460	6113	2378	8190	5912	2505	7650	5509	2682	7380	5307	2783
	18	25	8010	5979	1553	10350	7591	1835	9540	7054	2182	9000	6651	2404	8640	6382	2505	8100	5979	2707	7740	5710	2808
	19	27	8280	6181	1576	10710	7994	1859	9900	7390	2207	9360	6987	2429	9000	6718	2530	8460	6315	2707	8100	6046	2808
	22	30	9180	6113	1576	11880	7927	1859	10980	7323	2207	10350	6920	2454	9990	6651	2555	9000	6449	2808	8370	6315	2960
	24	32	9810	6113	1600	12690	7927	1882	11700	7323	2231	11070	6920	2454	10620	6651	2581	9360	6584	2884	8550	6516	3061
1.2+1.8+1.8+2.5+6.0	12	18	7470	5240	1506	8460	6987	1788	7830	6449	2107	7380	6113	2328	7110	5845	2429	6660	5509	2606	6390	5240	2707
	14	20	7470	5240	1506	9090	6987	1788	8460	6516	2132	7920	6113	2353	7650	5912	2454	7110	5509	2631	6840	5307	2758
	16	22	7470	5576	1529	9720	6987	1812	9000	6516	2157	8460	6113	2378	8190	5912	2505	7650	5509	2682	7380	5307	2783
	18	25	8010	5979	1553	10350	7591	1835	9540	7054	2182	9000	6651	2404	8640	6382	2505	8100	5979	2707	7740	5710	2808
	19	27	8280	6181	1576	10710	7994	1859	9900	7390	2207	9360	6987	2429	9000	6718	2530	8460	6315	2707	8100	6046	2808
	22	30	9180	6113	1576	11880	7927	1859	10980	7323	2207	10350	6920	2454	9990	6651	2555	9000	6449	2808	8370	6315	2960
	24	32	9810	6113	1600	12690	7927	1882	11700	7323	2231	11070	6920	2454	10620	6651	2581	9360	6584	2884	8550	6516	3061
1.2+1.8+1.8+3.5+3.5	12	18	7470	5240	1506	8460	6987	1788	7830	6449	2107	7380	6113	2328	7110	5845	2429	6660	5509	2606	6390	5240	2707
	14	20	7470	5240	1506	9090	6987	1788	8460	6516	2132	7920	6113	2353	7650	5912	2454	7110	5509	2631	6840	5307	2758
	16	22	7470	5576	1529	9720	6987	1812	9000	6516	2157	8460	6113	2378	8190	5912	2505	7650	5509	2682	7380	5307	2783
	18	25	8010	5979	1553	10350	7591	1835	9540	7054	2182	9000	6651	2404	8640	6382	2505	8100	5979	2707	7740	5710	2808
	19	27	8280	6181	1576	10710	7994	1859	9900	7390	2207	9360	6987	2429	9000	6718	2530	8460	6315	2707	8100	6046	2808
	22	30	9180	6113	1576	11880	7927	1859	10980	7323	2207	10350	6920	2454	9990	6651	2555	9000	6449	2808	8370	6315	2960
	24	32	9810	6113	1600	12690	7927	1882	11700	7323	2231	11070	6920	2454	10620	6651	2581	9360	6584	2884	8550	6516	3061

EWB : Evaporator Wet Bulb temperature (°C)
EDB : Evaporator Dry Bulb temperature (°C)
(°CDB) : Outdoor Unit Inlet Air Dry Temperature (°C)

TC : Total Capacity (W)
SHC : Sensible Heating Capacity (w)
PI : Power Input

	INDOOR		OUTDOOR TEMPERATURE (°CDB)																				
	EWB	EDB	-10			21			27			32			35			40			43		
	°C	°C	TC	SHC	PI	TC	SHC	PI	TC	SHC	PI	TC	SHC	PI	TC	SHC	PI	TC	SHC	PI	TC	SHC	PI
1.2+1.8+1.8+3.5+5.0	12	18	7470	5240	1506	8460	6987	1788	7830	6449	2107	7380	6113	2328	7110	5845	2429	6660	5509	2606	6390	5240	2707
	14	20	7470	5240	1506	9090	6987	1788	8460	6516	2132	7920	6113	2353	7650	5912	2454	7110	5509	2631	6840	5307	2758
	16	22	7470	5576	1529	9720	6987	1812	9000	6516	2157	8460	6113	2378	8190	5912	2505	7650	5509	2682	7380	5307	2783
	18	25	8010	5979	1553	10350	7591	1835	9540	7054	2182	9000	6651	2404	8640	6382	2505	8100	5979	2707	7740	5710	2808
	19	27	8280	6181	1576	10710	7994	1859	9900	7390	2207	9360	6987	2429	9000	6718	2530	8460	6315	2707	8100	6046	2808
	22	30	9180	6113	1576	11880	7927	1859	10980	7323	2207	10350	6920	2454	9990	6651	2555	9000	6449	2808	8370	6315	2960
	24	32	9810	6113	1600	12690	7927	1882	11700	7323	2231	11070	6920	2454	10620	6651	2581	9360	6584	2884	8550	6516	3061
1.2+1.8+1.8+3.5+6.0	12	18	7470	5240	1506	8460	6987	1788	7830	6449	2107	7380	6113	2328	7110	5845	2429	6660	5509	2606	6390	5240	2707
	14	20	7470	5240	1506	9090	6987	1788	8460	6516	2132	7920	6113	2353	7650	5912	2454	7110	5509	2631	6840	5307	2758
	16	22	7470	5576	1529	9720	6987	1812	9000	6516	2157	8460	6113	2378	8190	5912	2505	7650	5509	2682	7380	5307	2783
	18	25	8010	5979	1553	10350	7591	1835	9540	7054	2182	9000	6651	2404	8640	6382	2505	8100	5979	2707	7740	5710	2808
	19	27	8280	6181	1576	10710	7994	1859	9900	7390	2207	9360	6987	2429	9000	6718	2530	8460	6315	2707	8100	6046	2808
	22	30	9180	6113	1576	11880	7927	1859	10980	7323	2207	10350	6920	2454	9990	6651	2555	9000	6449	2808	8370	6315	2960
	24	32	9810	6113	1600	12690	7927	1882	11700	7323	2231	11070	6920	2454	10620	6651	2581	9360	6584	2884	8550	6516	3061
1.2+1.8+1.8+5.0+5.0	12	18	7470	5240	1506	8460	6987	1788	7830	6449	2107	7380	6113	2328	7110	5845	2429	6660	5509	2606	6390	5240	2707
	14	20	7470	5240	1506	9090	6987	1788	8460	6516	2132	7920	6113	2353	7650	5912	2454	7110	5509	2631	6840	5307	2758
	16	22	7470	5576	1529	9720	6987	1812	9000	6516	2157	8460	6113	2378	8190	5912	2505	7650	5509	2682	7380	5307	2783
	18	25	8010	5979	1553	10350	7591	1835	9540	7054	2182	9000	6651	2404	8640	6382	2505	8100	5979	2707	7740	5710	2808
	19	27	8280	6181	1576	10710	7994	1859	9900	7390	2207	9360	6987	2429	9000	6718	2530	8460	6315	2707	8100	6046	2808
	22	30	9180	6113	1576	11880	7927	1859	10980	7323	2207	10350	6920	2454	9990	6651	2555	9000	6449	2808	8370	6315	2960
	24	32	9810	6113	1600	12690	7927	1882	11700	7323	2231	11070	6920	2454	10620	6651	2581	9360	6584	2884	8550	6516	3061
1.2+1.8+2.5+2.5+2.5	12	18	7470	5240	1506	8460	6987	1788	7830	6449	2107	7380	6113	2328	7110	5845	2429	6660	5509	2606	6390	5240	2707
	14	20	7470	5240	1506	9090	6987	1788	8460	6516	2132	7920	6113	2353	7650	5912	2454	7110	5509	2631	6840	5307	2758
	16	22	7470	5576	1529	9720	6987	1812	9000	6516	2157	8460	6113	2378	8190	5912	2505	7650	5509	2682	7380	5307	2783
	18	25	8010	5979	1553	10350	7591	1835	9540	7054	2182	9000	6651	2404	8640	6382	2505	8100	5979	2707	7740	5710	2808
	19	27	8280	6181	1576	10710	7994	1859	9900	7390	2207	9360	6987	2429	9000	6718	2530	8460	6315	2707	8100	6046	2808
	22	30	9180	6113	1576	11880	7927	1859	10980	7323	2207	10350	6920	2454	9990	6651	2555	9000	6449	2808	8370	6315	2960
	24	32	9810	6113	1600	12690	7927	1882	11700	7323	2231	11070	6920	2454	10620	6651	2581	9360	6584	2884	8550	6516	3061
1.2+1.8+2.5+2.5+3.5	12	18	7470	5240	1506	8460	6987	1788	7830	6449	2107	7380	6113	2328	7110	5845	2429	6660	5509	2606	6390	5240	2707
	14	20	7470	5240	1506	9090	6987	1788	8460	6516	2132	7920	6113	2353	7650	5912	2454	7110	5509	2631	6840	5307	2758
	16	22	7470	5576	1529	9720	6987	1812	9000	6516	2157	8460	6113	2378	8190	5912	2505	7650	5509	2682	7380	5307	2783
	18	25	8010	5979	1553	10350	7591	1835	9540	7054	2182	9000	6651	2404	8640	6382	2505	8100	5979	2707	7740	5710	2808
	19	27	8280	6181	1576	10710	7994	1859	9900	7390	2207	9360	6987	2429	9000	6718	2530	8460	6315	2707	8100	6046	2808
	22	30	9180	6113	1576	11880	7927	1859	10980	7323	2207	10350	6920	2454	9990	6651	2555	9000	6449	2808	8370	6315	2960
	24	32	9810	6113	1600	12690	7927	1882	11700	7323	2231	11070	6920	2454	10620	6651	2581	9360	6584	2884	8550	6516	3061
1.2+1.8+2.5+2.5+5.0	12	18	7470	5240	1506	8460	6987	1788	7830	6449	2107	7380	6113	2328	7110	5845	2429	6660	5509	2606	6390	5240	2707
	14	20	7470	5240	1506	9090	6987	1788	8460	6516	2132	7920	6113	2353	7650	5912	2454	7110	5509	2631	6840	5307	2758
	16	22	7470	5576	1529	9720	6987	1812	9000	6516	2157	8460	6113	2378	8190	5912	2505	7650	5509	2682	7380	5307	2783
	18	25	8010	5979	1553	10350	7591	1835	9540	7054	2182	9000	6651	2404	8640	6382	2505	8100	5979	2707	7740	5710	2808
	19	27	8280	6181	1576	10710	7994	1859	9900	7390	2207	9360	6987	2429	9000	6718	2530	8460	6315	2707	8100	6046	2808
	22	30	9180	6113	1576	11880	7927	1859	10980	7323	2207	10350	6920	2454	9990	6651	2555	9000	6449	2808	8370	6315	2960
	24	32	9810	6113	1600	12690	7927	1882	11700	7323	2231	11070	6920	2454	10620	6651	2581	9360	6584	2884	8550	6516	3061
1.2+1.8+2.5+2.5+6.0	12	18	7470	5240	1506	8460	6987	1788	7830	6449	2107	7380	6113	2328	7110	5845	2429	6660	5509	2606	6390	5240	2707
	14	20	7470	5240	1506	9090	6987	1788	8460	6516	2132	7920	6113	2353	7650	5912	2454	7110	5509	2631	6840	5307	2758
	16	22	7470	5576	1529	9720	6987	1812	9000	6516	2157	8460	6113	2378	8190	5912	2505	7650	5509	2682	7380	5307	2783
	18	25	8010	5979	1553	10350	7591	1835	9540	7054	2182	9000	6651	2404	8640	6382	2505	8100	5979	2707	7740	5710	2808
	19	27	8280	6181	1576	10710	7994	1859	9900	7390	2207	9360	6987	2429	9000	6718	2530	8460	6315	2707	8100	6046	2808
	22	30	9180	6113	1576	11880	7927	1859	10980	7323	2207	10350	6920	2454	9990	6651	2555	9000	6449	2808	8370	6315	2960
	24	32	9810	6113	1600	12690	7927	1882	11700	7323	2231	11070	6920	2454	10620	6651	2581	9360	6584	2884	8550	6516	3061

EWB : Evaporator Wet Bulb temperature (°C)
EDB : Evaporator Dry Bulb temperature (°C)
(°CDB) : Outdoor Unit Inlet Air Dry Temperature (°C)

TC : Total Capacity (W)
SHC : Sensible Heating Capacity (w)
PI : Power Input

	INDOOR		OUTDOOR TEMPERATURE (°CDB)																				
	EWB	EDB	-10			21			27			32			35			40			43		
	°C	°C	TC	SHC	PI	TC	SHC	PI	TC	SHC	PI	TC	SHC	PI	TC	SHC	PI	TC	SHC	PI	TC	SHC	PI
1.2+1.8+2.5+3.5+3.5	12	18	7470	5240	1506	8460	6987	1788	7830	6449	2107	7380	6113	2328	7110	5845	2429	6660	5509	2606	6390	5240	2707
	14	20	7470	5240	1506	9090	6987	1788	8460	6516	2132	7920	6113	2353	7650	5912	2454	7110	5509	2631	6840	5307	2758
	16	22	7470	5576	1529	9720	6987	1812	9000	6516	2157	8460	6113	2378	8190	5912	2505	7650	5509	2682	7380	5307	2783
	18	25	8010	5979	1553	10350	7591	1835	9540	7054	2182	9000	6651	2404	8640	6382	2505	8100	5979	2707	7740	5710	2808
	19	27	8280	6181	1576	10710	7994	1859	9900	7390	2207	9360	6987	2429	9000	6718	2530	8460	6315	2707	8100	6046	2808
	22	30	9180	6113	1576	11880	7927	1859	10980	7323	2207	10350	6920	2454	9990	6651	2555	9000	6449	2808	8370	6315	2960
	24	32	9810	6113	1600	12690	7927	1882	11700	7323	2231	11070	6920	2454	10620	6651	2581	9360	6584	2884	8550	6516	3061
1.2+1.8+2.5+3.5+5.0	12	18	7470	5240	1506	8460	6987	1788	7830	6449	2107	7380	6113	2328	7110	5845	2429	6660	5509	2606	6390	5240	2707
	14	20	7470	5240	1506	9090	6987	1788	8460	6516	2132	7920	6113	2353	7650	5912	2454	7110	5509	2631	6840	5307	2758
	16	22	7470	5576	1529	9720	6987	1812	9000	6516	2157	8460	6113	2378	8190	5912	2505	7650	5509	2682	7380	5307	2783
	18	25	8010	5979	1553	10350	7591	1835	9540	7054	2182	9000	6651	2404	8640	6382	2505	8100	5979	2707	7740	5710	2808
	19	27	8280	6181	1576	10710	7994	1859	9900	7390	2207	9360	6987	2429	9000	6718	2530	8460	6315	2707	8100	6046	2808
	22	30	9180	6113	1576	11880	7927	1859	10980	7323	2207	10350	6920	2454	9990	6651	2555	9000	6449	2808	8370	6315	2960
	24	32	9810	6113	1600	12690	7927	1882	11700	7323	2231	11070	6920	2454	10620	6651	2581	9360	6584	2884	8550	6516	3061
1.2+1.8+2.5+3.5+6.0	12	18	7470	5240	1506	8460	6987	1788	7830	6449	2107	7380	6113	2328	7110	5845	2429	6660	5509	2606	6390	5240	2707
	14	20	7470	5240	1506	9090	6987	1788	8460	6516	2132	7920	6113	2353	7650	5912	2454	7110	5509	2631	6840	5307	2758
	16	22	7470	5576	1529	9720	6987	1812	9000	6516	2157	8460	6113	2378	8190	5912	2505	7650	5509	2682	7380	5307	2783
	18	25	8010	5979	1553	10350	7591	1835	9540	7054	2182	9000	6651	2404	8640	6382	2505	8100	5979	2707	7740	5710	2808
	19	27	8280	6181	1576	10710	7994	1859	9900	7390	2207	9360	6987	2429	9000	6718	2530	8460	6315	2707	8100	6046	2808
	22	30	9180	6113	1576	11880	7927	1859	10980	7323	2207	10350	6920	2454	9990	6651	2555	9000	6449	2808	8370	6315	2960
	24	32	9810	6113	1600	12690	7927	1882	11700	7323	2231	11070	6920	2454	10620	6651	2581	9360	6584	2884	8550	6516	3061
1.2+1.8+2.5+5.0+5.0	12	18	7470	5240	1506	8460	6987	1788	7830	6449	2107	7380	6113	2328	7110	5845	2429	6660	5509	2606	6390	5240	2707
	14	20	7470	5240	1506	9090	6987	1788	8460	6516	2132	7920	6113	2353	7650	5912	2454	7110	5509	2631	6840	5307	2758
	16	22	7470	5576	1529	9720	6987	1812	9000	6516	2157	8460	6113	2378	8190	5912	2505	7650	5509	2682	7380	5307	2783
	18	25	8010	5979	1553	10350	7591	1835	9540	7054	2182	9000	6651	2404	8640	6382	2505	8100	5979	2707	7740	5710	2808
	19	27	8280	6181	1576	10710	7994	1859	9900	7390	2207	9360	6987	2429	9000	6718	2530	8460	6315	2707	8100	6046	2808
	22	30	9180	6113	1576	11880	7927	1859	10980	7323	2207	10350	6920	2454	9990	6651	2555	9000	6449	2808	8370	6315	2960
	24	32	9810	6113	1600	12690	7927	1882	11700	7323	2231	11070	6920	2454	10620	6651	2581	9360	6584	2884	8550	6516	3061
1.2+1.8+3.5+3.5+3.5	12	18	7470	5240	1506	8460	6987	1788	7830	6449	2107	7380	6113	2328	7110	5845	2429	6660	5509	2606	6390	5240	2707
	14	20	7470	5240	1506	9090	6987	1788	8460	6516	2132	7920	6113	2353	7650	5912	2454	7110	5509	2631	6840	5307	2758
	16	22	7470	5576	1529	9720	6987	1812	9000	6516	2157	8460	6113	2378	8190	5912	2505	7650	5509	2682	7380	5307	2783
	18	25	8010	5979	1553	10350	7591	1835	9540	7054	2182	9000	6651	2404	8640	6382	2505	8100	5979	2707	7740	5710	2808
	19	27	8280	6181	1576	10710	7994	1859	9900	7390	2207	9360	6987	2429	9000	6718	2530	8460	6315	2707	8100	6046	2808
	22	30	9180	6113	1576	11880	7927	1859	10980	7323	2207	10350	6920	2454	9990	6651	2555	9000	6449	2808	8370	6315	2960
	24	32	9810	6113	1600	12690	7927	1882	11700	7323	2231	11070	6920	2454	10620	6651	2581	9360	6584	2884	8550	6516	3061
1.2+1.8+3.5+3.5+5.0	12	18	7470	5240	1506	8460	6987	1788	7830	6449	2107	7380	6113	2328	7110	5845	2429	6660	5509	2606	6390	5240	2707
	14	20	7470	5240	1506	9090	6987	1788	8460	6516	2132	7920	6113	2353	7650	5912	2454	7110	5509	2631	6840	5307	2758
	16	22	7470	5576	1529	9720	6987	1812	9000	6516	2157	8460	6113	2378	8190	5912	2505	7650	5509	2682	7380	5307	2783
	18	25	8010	5979	1553	10350	7591	1835	9540	7054	2182	9000	6651	2404	8640	6382	2505	8100	5979	2707	7740	5710	2808
	19	27	8280	6181	1576	10710	7994	1859	9900	7390	2207	9360	6987	2429	9000	6718	2530	8460	6315	2707	8100	6046	2808
	22	30	9180	6113	1576	11880	7927	1859	10980	7323	2207	10350	6920	2454	9990	6651	2555	9000	6449	2808	8370	6315	2960
	24	32	9810	6113	1600	12690	7927	1882	11700	7323	2231	11070	6920	2454	10620	6651	2581	9360	6584	2884	8550	6516	3061
1.8+1.8+1.8+1.8+1.8	12	18	7470	5240	1405	8460	6987	1668	7830	6449	1966	7380	6113	2171	7110	5845	2266	6660	5509	2431	6390	5240	2525
	14	20	7470	5240	1405	9090	6987	1668	8460	6516	1989	7920	6113	2195	7650	5912	2289	7110	5509	2454	6840	5307	2572
	16	22	7470	5576	1427	9720	6987	1690	9000	6516	2012	8460	6113	2218	8190	5912	2336	7650	5509	2502	7380	5307	2596
	18	25	8010	5979	1449	10350	7591	1712	9540	7054	2035	9000	6651	2242	8640	6382	2336	8100	5979	2525	7740	5710	2620
	19	27	8280	6181	1471	10710	7994	1734	9900	7390	2058	9360	6987	2266	9000	6718	2360	8460	6315	2525	8100	6046	2620
	22	30	9180	6113	1471	11880	7927	1734	10980	7323	2058	10350	6920	2289	9990	6651	2384	9000	6449	2620	8370	6315	2761
	24	32	9810	6113	1492	12690	7927	1756	11700	7323	2082	11070	6920	2289	10620	6651	2407	9360	6584	2690	8550	6516	2856

EWB : Evaporator Wet Bulb temperature (°C)
EDB : Evaporator Dry Bulb temperature (°C)
(°CDB) : Outdoor Unit Inlet Air Dry Temperature (°C)

TC : Total Capacity (W)
SHC : Sensible Heating Capacity (w)
PI : Power Input

	INDOOR		OUTDOOR TEMPERATURE (°CDB)																				
	EWB	EDB	-10			21			27			32			35			40			43		
	°C	°C	TC	SHC	PI	TC	SHC	PI	TC	SHC	PI	TC	SHC	PI	TC	SHC	PI	TC	SHC	PI	TC	SHC	PI
1.8+1.8+1.8+1.8+2.5	12	18	7470	5240	1405	8460	6987	1668	7830	6449	1966	7380	6113	2171	7110	5845	2266	6660	5509	2431	6390	5240	2525
	14	20	7470	5240	1405	9090	6987	1668	8460	6516	1989	7920	6113	2195	7650	5912	2289	7110	5509	2454	6840	5307	2572
	16	22	7470	5576	1427	9720	6987	1690	9000	6516	2012	8460	6113	2218	8190	5912	2336	7650	5509	2502	7380	5307	2596
	18	25	8010	5979	1449	10350	7591	1712	9540	7054	2035	9000	6651	2242	8640	6382	2336	8100	5979	2525	7740	5710	2620
	19	27	8280	6181	1471	10710	7994	1734	9900	7390	2058	9360	6987	2266	9000	6718	2360	8460	6315	2525	8100	6046	2620
	22	30	9180	6113	1471	11880	7927	1734	10980	7323	2058	10350	6920	2289	9990	6651	2384	9000	6449	2620	8370	6315	2761
	24	32	9810	6113	1492	12690	7927	1756	11700	7323	2082	11070	6920	2289	10620	6651	2407	9360	6584	2690	8550	6516	2856
1.8+1.8+1.8+1.8+3.5	12	18	7470	5240	1405	8460	6987	1668	7830	6449	1966	7380	6113	2171	7110	5845	2266	6660	5509	2431	6390	5240	2525
	14	20	7470	5240	1405	9090	6987	1668	8460	6516	1989	7920	6113	2195	7650	5912	2289	7110	5509	2454	6840	5307	2572
	16	22	7470	5576	1427	9720	6987	1690	9000	6516	2012	8460	6113	2218	8190	5912	2336	7650	5509	2502	7380	5307	2596
	18	25	8010	5979	1449	10350	7591	1712	9540	7054	2035	9000	6651	2242	8640	6382	2336	8100	5979	2525	7740	5710	2620
	19	27	8280	6181	1471	10710	7994	1734	9900	7390	2058	9360	6987	2266	9000	6718	2360	8460	6315	2525	8100	6046	2620
	22	30	9180	6113	1471	11880	7927	1734	10980	7323	2058	10350	6920	2289	9990	6651	2384	9000	6449	2620	8370	6315	2761
	24	32	9810	6113	1492	12690	7927	1756	11700	7323	2082	11070	6920	2289	10620	6651	2407	9360	6584	2690	8550	6516	2856
1.8+1.8+1.8+1.8+5.0	12	18	7470	5240	1405	8460	6987	1668	7830	6449	1966	7380	6113	2171	7110	5845	2266	6660	5509	2431	6390	5240	2525
	14	20	7470	5240	1405	9090	6987	1668	8460	6516	1989	7920	6113	2195	7650	5912	2289	7110	5509	2454	6840	5307	2572
	16	22	7470	5576	1427	9720	6987	1690	9000	6516	2012	8460	6113	2218	8190	5912	2336	7650	5509	2502	7380	5307	2596
	18	25	8010	5979	1449	10350	7591	1712	9540	7054	2035	9000	6651	2242	8640	6382	2336	8100	5979	2525	7740	5710	2620
	19	27	8280	6181	1471	10710	7994	1734	9900	7390	2058	9360	6987	2266	9000	6718	2360	8460	6315	2525	8100	6046	2620
	22	30	9180	6113	1471	11880	7927	1734	10980	7323	2058	10350	6920	2289	9990	6651	2384	9000	6449	2620	8370	6315	2761
	24	32	9810	6113	1492	12690	7927	1756	11700	7323	2082	11070	6920	2289	10620	6651	2407	9360	6584	2690	8550	6516	2856
1.8+1.8+1.8+1.8+6.0	12	18	7470	5240	1405	8460	6987	1668	7830	6449	1966	7380	6113	2171	7110	5845	2266	6660	5509	2431	6390	5240	2525
	14	20	7470	5240	1405	9090	6987	1668	8460	6516	1989	7920	6113	2195	7650	5912	2289	7110	5509	2454	6840	5307	2572
	16	22	7470	5576	1427	9720	6987	1690	9000	6516	2012	8460	6113	2218	8190	5912	2336	7650	5509	2502	7380	5307	2596
	18	25	8010	5979	1449	10350	7591	1712	9540	7054	2035	9000	6651	2242	8640	6382	2336	8100	5979	2525	7740	5710	2620
	19	27	8280	6181	1471	10710	7994	1734	9900	7390	2058	9360	6987	2266	9000	6718	2360	8460	6315	2525	8100	6046	2620
	22	30	9180	6113	1471	11880	7927	1734	10980	7323	2058	10350	6920	2289	9990	6651	2384	9000	6449	2620	8370	6315	2761
	24	32	9810	6113	1492	12690	7927	1756	11700	7323	2082	11070	6920	2289	10620	6651	2407	9360	6584	2690	8550	6516	2856
1.8+1.8+1.8+2.5+2.5	12	18	7470	5240	1405	8460	6987	1668	7830	6449	1966	7380	6113	2171	7110	5845	2266	6660	5509	2431	6390	5240	2525
	14	20	7470	5240	1405	9090	6987	1668	8460	6516	1989	7920	6113	2195	7650	5912	2289	7110	5509	2454	6840	5307	2572
	16	22	7470	5576	1427	9720	6987	1690	9000	6516	2012	8460	6113	2218	8190	5912	2336	7650	5509	2502	7380	5307	2596
	18	25	8010	5979	1449	10350	7591	1712	9540	7054	2035	9000	6651	2242	8640	6382	2336	8100	5979	2525	7740	5710	2620
	19	27	8280	6181	1471	10710	7994	1734	9900	7390	2058	9360	6987	2266	9000	6718	2360	8460	6315	2525	8100	6046	2620
	22	30	9180	6113	1471	11880	7927	1734	10980	7323	2058	10350	6920	2289	9990	6651	2384	9000	6449	2620	8370	6315	2761
	24	32	9810	6113	1492	12690	7927	1756	11700	7323	2082	11070	6920	2289	10620	6651	2407	9360	6584	2690	8550	6516	2856
1.8+1.8+1.8+2.5+3.5	12	18	7470	5240	1405	8460	6987	1668	7830	6449	1966	7380	6113	2171	7110	5845	2266	6660	5509	2431	6390	5240	2525
	14	20	7470	5240	1405	9090	6987	1668	8460	6516	1989	7920	6113	2195	7650	5912	2289	7110	5509	2454	6840	5307	2572
	16	22	7470	5576	1427	9720	6987	1690	9000	6516	2012	8460	6113	2218	8190	5912	2336	7650	5509	2502	7380	5307	2596
	18	25	8010	5979	1449	10350	7591	1712	9540	7054	2035	9000	6651	2242	8640	6382	2336	8100	5979	2525	7740	5710	2620
	19	27	8280	6181	1471	10710	7994	1734	9900	7390	2058	9360	6987	2266	9000	6718	2360	8460	6315	2525	8100	6046	2620
	22	30	9180	6113	1471	11880	7927	1734	10980	7323	2058	10350	6920	2289	9990	6651	2384	9000	6449	2620	8370	6315	2761
	24	32	9810	6113	1492	12690	7927	1756	11700	7323	2082	11070	6920	2289	10620	6651	2407	9360	6584	2690	8550	6516	2856
1.8+1.8+1.8+2.5+5.0	12	18	7470	5240	1405	8460	6987	1668	7830	6449	1966	7380	6113	2171	7110	5845	2266	6660	5509	2431	6390	5240	2525
	14	20	7470	5240	1405	9090	6987	1668	8460	6516	1989	7920	6113	2195	7650	5912	2289	7110	5509	2454	6840	5307	2572
	16	22	7470	5576	1427	9720	6987	1690	9000	6516	2012	8460	6113	2218	8190	5912	2336	7650	5509	2502	7380	5307	2596
	18	25	8010	5979	1449	10350	7591	1712	9540	7054	2035	9000	6651	2242	8640	6382	2336	8100	5979	2525	7740	5710	2620
	19	27	8280	6181	1471	10710	7994	1734	9900	7390	2058	9360	6987	2266	9000	6718	2360	8460	6315	2525	8100	6046	2620
	22	30	9180	6113	1471	11880	7927	1734	10980	7323	2058	10350	6920	2289	9990	6651	2384	9000	6449	2620	8370	6315	2761
	24	32	9810	6113	1492	12690	7927	1756	11700	7323	2082	11070	6920	2289	10620	6651	2407	9360	6584	2690	8550	6516	2856

EWB : Evaporator Wet Bulb temperature (°C)
EDB : Evaporator Dry Bulb temperature (°C)
(°CDB) : Outdoor Unit Inlet Air Dry Temperature (°C)

TC : Total Capacity (W)
SHC : Sensible Heating Capacity (w)
PI : Power Input

	INDOOR		OUTDOOR TEMPERATURE (°CDB)																				
	EWB	EDB	-10			21			27			32			35			40			43		
	°C	°C	TC	SHC	PI	TC	SHC	PI	TC	SHC	PI	TC	SHC	PI	TC	SHC	PI	TC	SHC	PI	TC	SHC	PI
1.8+1.8+1.8+2.5+6.0	12	18	7470	5240	1405	8460	6987	1668	7830	6449	1966	7380	6113	2171	7110	5845	2266	6660	5509	2431	6390	5240	2525
	14	20	7470	5240	1405	9090	6987	1668	8460	6516	1989	7920	6113	2195	7650	5912	2289	7110	5509	2454	6840	5307	2572
	16	22	7470	5576	1427	9720	6987	1690	9000	6516	2012	8460	6113	2218	8190	5912	2336	7650	5509	2502	7380	5307	2596
	18	25	8010	5979	1449	10350	7591	1712	9540	7054	2035	9000	6651	2242	8640	6382	2336	8100	5979	2525	7740	5710	2620
	19	27	8280	6181	1471	10710	7994	1734	9900	7390	2058	9360	6987	2266	9000	6718	2360	8460	6315	2525	8100	6046	2620
	22	30	9180	6113	1471	11880	7927	1734	10980	7323	2058	10350	6920	2289	9990	6651	2384	9000	6449	2620	8370	6315	2761
	24	32	9810	6113	1492	12690	7927	1756	11700	7323	2082	11070	6920	2289	10620	6651	2407	9360	6584	2690	8550	6516	2856
1.8+1.8+1.8+3.5+3.5	12	18	7470	5240	1405	8460	6987	1668	7830	6449	1966	7380	6113	2171	7110	5845	2266	6660	5509	2431	6390	5240	2525
	14	20	7470	5240	1405	9090	6987	1668	8460	6516	1989	7920	6113	2195	7650	5912	2289	7110	5509	2454	6840	5307	2572
	16	22	7470	5576	1427	9720	6987	1690	9000	6516	2012	8460	6113	2218	8190	5912	2336	7650	5509	2502	7380	5307	2596
	18	25	8010	5979	1449	10350	7591	1712	9540	7054	2035	9000	6651	2242	8640	6382	2336	8100	5979	2525	7740	5710	2620
	19	27	8280	6181	1471	10710	7994	1734	9900	7390	2058	9360	6987	2266	9000	6718	2360	8460	6315	2525	8100	6046	2620
	22	30	9180	6113	1471	11880	7927	1734	10980	7323	2058	10350	6920	2289	9990	6651	2384	9000	6449	2620	8370	6315	2761
	24	32	9810	6113	1492	12690	7927	1756	11700	7323	2082	11070	6920	2289	10620	6651	2407	9360	6584	2690	8550	6516	2856
1.8+1.8+1.8+3.5+5.0	12	18	7470	5240	1405	8460	6987	1668	7830	6449	1966	7380	6113	2171	7110	5845	2266	6660	5509	2431	6390	5240	2525
	14	20	7470	5240	1405	9090	6987	1668	8460	6516	1989	7920	6113	2195	7650	5912	2289	7110	5509	2454	6840	5307	2572
	16	22	7470	5576	1427	9720	6987	1690	9000	6516	2012	8460	6113	2218	8190	5912	2336	7650	5509	2502	7380	5307	2596
	18	25	8010	5979	1449	10350	7591	1712	9540	7054	2035	9000	6651	2242	8640	6382	2336	8100	5979	2525	7740	5710	2620
	19	27	8280	6181	1471	10710	7994	1734	9900	7390	2058	9360	6987	2266	9000	6718	2360	8460	6315	2525	8100	6046	2620
	22	30	9180	6113	1471	11880	7927	1734	10980	7323	2058	10350	6920	2289	9990	6651	2384	9000	6449	2620	8370	6315	2761
	24	32	9810	6113	1492	12690	7927	1756	11700	7323	2082	11070	6920	2289	10620	6651	2407	9360	6584	2690	8550	6516	2856
1.8+1.8+1.8+3.5+6.0	12	18	7470	5240	1405	8460	6987	1668	7830	6449	1966	7380	6113	2171	7110	5845	2266	6660	5509	2431	6390	5240	2525
	14	20	7470	5240	1405	9090	6987	1668	8460	6516	1989	7920	6113	2195	7650	5912	2289	7110	5509	2454	6840	5307	2572
	16	22	7470	5576	1427	9720	6987	1690	9000	6516	2012	8460	6113	2218	8190	5912	2336	7650	5509	2502	7380	5307	2596
	18	25	8010	5979	1449	10350	7591	1712	9540	7054	2035	9000	6651	2242	8640	6382	2336	8100	5979	2525	7740	5710	2620
	19	27	8280	6181	1471	10710	7994	1734	9900	7390	2058	9360	6987	2266	9000	6718	2360	8460	6315	2525	8100	6046	2620
	22	30	9180	6113	1471	11880	7927	1734	10980	7323	2058	10350	6920	2289	9990	6651	2384	9000	6449	2620	8370	6315	2761
	24	32	9810	6113	1492	12690	7927	1756	11700	7323	2082	11070	6920	2289	10620	6651	2407	9360	6584	2690	8550	6516	2856
1.8+1.8+1.8+5.0+5.0	12	18	7470	5240	1405	8460	6987	1668	7830	6449	1966	7380	6113	2171	7110	5845	2266	6660	5509	2431	6390	5240	2525
	14	20	7470	5240	1405	9090	6987	1668	8460	6516	1989	7920	6113	2195	7650	5912	2289	7110	5509	2454	6840	5307	2572
	16	22	7470	5576	1427	9720	6987	1690	9000	6516	2012	8460	6113	2218	8190	5912	2336	7650	5509	2502	7380	5307	2596
	18	25	8010	5979	1449	10350	7591	1712	9540	7054	2035	9000	6651	2242	8640	6382	2336	8100	5979	2525	7740	5710	2620
	19	27	8280	6181	1471	10710	7994	1734	9900	7390	2058	9360	6987	2266	9000	6718	2360	8460	6315	2525	8100	6046	2620
	22	30	9180	6113	1471	11880	7927	1734	10980	7323	2058	10350	6920	2289	9990	6651	2384	9000	6449	2620	8370	6315	2761
	24	32	9810	6113	1492	12690	7927	1756	11700	7323	2082	11070	6920	2289	10620	6651	2407	9360	6584	2690	8550	6516	2856
1.8+1.8+2.5+2.5+2.5	12	18	7470	5240	1405	8460	6987	1668	7830	6449	1966	7380	6113	2171	7110	5845	2266	6660	5509	2431	6390	5240	2525
	14	20	7470	5240	1405	9090	6987	1668	8460	6516	1989	7920	6113	2195	7650	5912	2289	7110	5509	2454	6840	5307	2572
	16	22	7470	5576	1427	9720	6987	1690	9000	6516	2012	8460	6113	2218	8190	5912	2336	7650	5509	2502	7380	5307	2596
	18	25	8010	5979	1449	10350	7591	1712	9540	7054	2035	9000	6651	2242	8640	6382	2336	8100	5979	2525	7740	5710	2620
	19	27	8280	6181	1471	10710	7994	1734	9900	7390	2058	9360	6987	2266	9000	6718	2360	8460	6315	2525	8100	6046	2620
	22	30	9180	6113	1471	11880	7927	1734	10980	7323	2058	10350	6920	2289	9990	6651	2384	9000	6449	2620	8370	6315	2761
	24	32	9810	6113	1492	12690	7927	1756	11700	7323	2082	11070	6920	2289	10620	6651	2407	9360	6584	2690	8550	6516	2856
1.8+1.8+2.5+2.5+3.5	12	18	7470	5240	1405	8460	6987	1668	7830	6449	1966	7380	6113	2171	7110	5845	2266	6660	5509	2431	6390	5240	2525
	14	20	7470	5240	1405	9090	6987	1668	8460	6516	1989	7920	6113	2195	7650	5912	2289	7110	5509	2454	6840	5307	2572
	16	22	7470	5576	1427	9720	6987	1690	9000	6516	2012	8460	6113	2218	8190	5912	2336	7650	5509	2502	7380	5307	2596
	18	25	8010	5979	1449	10350	7591	1712	9540	7054	2035	9000	6651	2242	8640	6382	2336	8100	5979	2525	7740	5710	2620
	19	27	8280	6181	1471	10710	7994	1734	9900	7390	2058	9360	6987	2266	9000	6718	2360	8460	6315	2525	8100	6046	2620
	22	30	9180	6113	1471	11880	7927	1734	10980	7323	2058	10350	6920	2289	9990	6651	2384	9000	6449	2620	8370	6315	2761
	24	32	9810	6113	1492	12690	7927	1756	11700	7323	2082	11070	6920	2289	10620	6651	2407	9360	6584	2690	8550	6516	2856

EWB : Evaporator Wet Bulb temperature (°C)
EDB : Evaporator Dry Bulb temperature (°C)
(°CDB) : Outdoor Unit Inlet Air Dry Temperature (°C)

TC : Total Capacity (W)
SHC : Sensible Heating Capacity (w)
PI : Power Input

	INDOOR		OUTDOOR TEMPERATURE (°CDB)																				
	EWB	EDB	-10			21			27			32			35			40			43		
	°C	°C	TC	SHC	PI	TC	SHC	PI	TC	SHC	PI	TC	SHC	PI	TC	SHC	PI	TC	SHC	PI	TC	SHC	PI
1.8+1.8+2.5+2.5+5.0	12	18	7470	5240	1405	8460	6987	1668	7830	6449	1966	7380	6113	2171	7110	5845	2266	6660	5509	2431	6390	5240	2525
	14	20	7470	5240	1405	9090	6987	1668	8460	6516	1989	7920	6113	2195	7650	5912	2289	7110	5509	2454	6840	5307	2572
	16	22	7470	5576	1427	9720	6987	1690	9000	6516	2012	8460	6113	2218	8190	5912	2336	7650	5509	2502	7380	5307	2596
	18	25	8010	5979	1449	10350	7591	1712	9540	7054	2035	9000	6651	2242	8640	6382	2336	8100	5979	2525	7740	5710	2620
	19	27	8280	6181	1471	10710	7994	1734	9900	7390	2058	9360	6987	2266	9000	6718	2360	8460	6315	2525	8100	6046	2620
	22	30	9180	6113	1471	11880	7927	1734	10980	7323	2058	10350	6920	2289	9990	6651	2384	9000	6449	2620	8370	6315	2761
	24	32	9810	6113	1492	12690	7927	1756	11700	7323	2082	11070	6920	2289	10620	6651	2407	9360	6584	2690	8550	6516	2856
1.8+1.8+2.5+2.5+6.0	12	18	7470	5240	1405	8460	6987	1668	7830	6449	1966	7380	6113	2171	7110	5845	2266	6660	5509	2431	6390	5240	2525
	14	20	7470	5240	1405	9090	6987	1668	8460	6516	1989	7920	6113	2195	7650	5912	2289	7110	5509	2454	6840	5307	2572
	16	22	7470	5576	1427	9720	6987	1690	9000	6516	2012	8460	6113	2218	8190	5912	2336	7650	5509	2502	7380	5307	2596
	18	25	8010	5979	1449	10350	7591	1712	9540	7054	2035	9000	6651	2242	8640	6382	2336	8100	5979	2525	7740	5710	2620
	19	27	8280	6181	1471	10710	7994	1734	9900	7390	2058	9360	6987	2266	9000	6718	2360	8460	6315	2525	8100	6046	2620
	22	30	9180	6113	1471	11880	7927	1734	10980	7323	2058	10350	6920	2289	9990	6651	2384	9000	6449	2620	8370	6315	2761
	24	32	9810	6113	1492	12690	7927	1756	11700	7323	2082	11070	6920	2289	10620	6651	2407	9360	6584	2690	8550	6516	2856
1.8+1.8+2.5+3.5+3.5	12	18	7470	5240	1405	8460	6987	1668	7830	6449	1966	7380	6113	2171	7110	5845	2266	6660	5509	2431	6390	5240	2525
	14	20	7470	5240	1405	9090	6987	1668	8460	6516	1989	7920	6113	2195	7650	5912	2289	7110	5509	2454	6840	5307	2572
	16	22	7470	5576	1427	9720	6987	1690	9000	6516	2012	8460	6113	2218	8190	5912	2336	7650	5509	2502	7380	5307	2596
	18	25	8010	5979	1449	10350	7591	1712	9540	7054	2035	9000	6651	2242	8640	6382	2336	8100	5979	2525	7740	5710	2620
	19	27	8280	6181	1471	10710	7994	1734	9900	7390	2058	9360	6987	2266	9000	6718	2360	8460	6315	2525	8100	6046	2620
	22	30	9180	6113	1471	11880	7927	1734	10980	7323	2058	10350	6920	2289	9990	6651	2384	9000	6449	2620	8370	6315	2761
	24	32	9810	6113	1492	12690	7927	1756	11700	7323	2082	11070	6920	2289	10620	6651	2407	9360	6584	2690	8550	6516	2856
1.8+1.8+2.5+3.5+5.0	12	18	7470	5240	1405	8460	6987	1668	7830	6449	1966	7380	6113	2171	7110	5845	2266	6660	5509	2431	6390	5240	2525
	14	20	7470	5240	1405	9090	6987	1668	8460	6516	1989	7920	6113	2195	7650	5912	2289	7110	5509	2454	6840	5307	2572
	16	22	7470	5576	1427	9720	6987	1690	9000	6516	2012	8460	6113	2218	8190	5912	2336	7650	5509	2502	7380	5307	2596
	18	25	8010	5979	1449	10350	7591	1712	9540	7054	2035	9000	6651	2242	8640	6382	2336	8100	5979	2525	7740	5710	2620
	19	27	8280	6181	1471	10710	7994	1734	9900	7390	2058	9360	6987	2266	9000	6718	2360	8460	6315	2525	8100	6046	2620
	22	30	9180	6113	1471	11880	7927	1734	10980	7323	2058	10350	6920	2289	9990	6651	2384	9000	6449	2620	8370	6315	2761
	24	32	9810	6113	1492	12690	7927	1756	11700	7323	2082	11070	6920	2289	10620	6651	2407	9360	6584	2690	8550	6516	2856
1.8+1.8+3.5+3.5+3.5	12	18	7470	5240	1405	8460	6987	1668	7830	6449	1966	7380	6113	2171	7110	5845	2266	6660	5509	2431	6390	5240	2525
	14	20	7470	5240	1405	9090	6987	1668	8460	6516	1989	7920	6113	2195	7650	5912	2289	7110	5509	2454	6840	5307	2572
	16	22	7470	5576	1427	9720	6987	1690	9000	6516	2012	8460	6113	2218	8190	5912	2336	7650	5509	2502	7380	5307	2596
	18	25	8010	5979	1449	10350	7591	1712	9540	7054	2035	9000	6651	2242	8640	6382	2336	8100	5979	2525	7740	5710	2620
	19	27	8280	6181	1471	10710	7994	1734	9900	7390	2058	9360	6987	2266	9000	6718	2360	8460	6315	2525	8100	6046	2620
	22	30	9180	6113	1471	11880	7927	1734	10980	7323	2058	10350	6920	2289	9990	6651	2384	9000	6449	2620	8370	6315	2761
	24	32	9810	6113	1492	12690	7927	1756	11700	7323	2082	11070	6920	2289	10620	6651	2407	9360	6584	2690	8550	6516	2856
1.8+2.5+2.5+2.5+2.5	12	18	7470	5240	1405	8460	6987	1668	7830	6449	1966	7380	6113	2171	7110	5845	2266	6660	5509	2431	6390	5240	2525
	14	20	7470	5240	1405	9090	6987	1668	8460	6516	1989	7920	6113	2195	7650	5912	2289	7110	5509	2454	6840	5307	2572
	16	22	7470	5576	1427	9720	6987	1690	9000	6516	2012	8460	6113	2218	8190	5912	2336	7650	5509	2502	7380	5307	2596
	18	25	8010	5979	1449	10350	7591	1712	9540	7054	2035	9000	6651	2242	8640	6382	2336	8100	5979	2525	7740	5710	2620
	19	27	8280	6181	1471	10710	7994	1734	9900	7390	2058	9360	6987	2266	9000	6718	2360	8460	6315	2525	8100	6046	2620
	22	30	9180	6113	1471	11880	7927	1734	10980	7323	2058	10350	6920	2289	9990	6651	2384	9000	6449	2620	8370	6315	2761
	24	32	9810	6113	1492	12690	7927	1756	11700	7323	2082	11070	6920	2289	10620	6651	2407	9360	6584	2690	8550	6516	2856
1.8+2.5+2.5+2.5+3.5	12	18	7470	5240	1405	8460	6987	1668	7830	6449	1966	7380	6113	2171	7110	5845	2266	6660	5509	2431	6390	5240	2525
	14	20	7470	5240	1405	9090	6987	1668	8460	6516	1989	7920	6113	2195	7650	5912	2289	7110	5509	2454	6840	5307	2572
	16	22	7470	5576	1427	9720	6987	1690	9000	6516	2012	8460	6113	2218	8190	5912	2336	7650	5509	2502	7380	5307	2596
	18	25	8010	5979	1449	10350	7591	1712	9540	7054	2035	9000	6651	2242	8640	6382	2336	8100	5979	2525	7740	5710	2620
	19	27	8280	6181	1471	10710	7994	1734	9900	7390	2058	9360	6987	2266	9000	6718	2360	8460	6315	2525	8100	6046	2620
	22	30	9180	6113	1471	11880	7927	1734	10980	7323	2058	10350	6920	2289	9990	6651	2384	9000	6449	2620	8370	6315	2761
	24	32	9810	6113	1492	12690	7927	1756	11700	7323	2082	11070	6920	2289	10620	6651	2407	9360	6584	2690	8550	6516	2856

EWB : Evaporator Wet Bulb temperature (°C)
EDB : Evaporator Dry Bulb temperature (°C)
(°CDB) : Outdoor Unit Inlet Air Dry Temperature (°C)

TC : Total Capacity (W)
SHC : Sensible Heating Capacity (w)
PI : Power Input

	INDOOR		OUTDOOR TEMPERATURE (°CDB)																				
	EWB	EDB	-10			21			27			32			35			40			43		
	°C	°C	TC	SHC	PI	TC	SHC	PI	TC	SHC	PI	TC	SHC	PI	TC	SHC	PI	TC	SHC	PI	TC	SHC	PI
1.8+2.5+2.5+2.5+5.0	12	18	7470	5240	1405	8460	6987	1668	7830	6449	1966	7380	6113	2171	7110	5845	2266	6660	5509	2431	6390	5240	2525
	14	20	7470	5240	1405	9090	6987	1668	8460	6516	1989	7920	6113	2195	7650	5912	2289	7110	5509	2454	6840	5307	2572
	16	22	7470	5576	1427	9720	6987	1690	9000	6516	2012	8460	6113	2218	8190	5912	2336	7650	5509	2502	7380	5307	2596
	18	25	8010	5979	1449	10350	7591	1712	9540	7054	2035	9000	6651	2242	8640	6382	2336	8100	5979	2525	7740	5710	2620
	19	27	8280	6181	1471	10710	7994	1734	9900	7390	2058	9360	6987	2266	9000	6718	2360	8460	6315	2525	8100	6046	2620
	22	30	9180	6113	1471	11880	7927	1734	10980	7323	2058	10350	6920	2289	9990	6651	2384	9000	6449	2620	8370	6315	2761
	24	32	9810	6113	1492	12690	7927	1756	11700	7323	2082	11070	6920	2289	10620	6651	2407	9360	6584	2690	8550	6516	2856
1.8+2.5+2.5+2.5+6.0	12	18	7470	5240	1405	8460	6987	1668	7830	6449	1966	7380	6113	2171	7110	5845	2266	6660	5509	2431	6390	5240	2525
	14	20	7470	5240	1405	9090	6987	1668	8460	6516	1989	7920	6113	2195	7650	5912	2289	7110	5509	2454	6840	5307	2572
	16	22	7470	5576	1427	9720	6987	1690	9000	6516	2012	8460	6113	2218	8190	5912	2336	7650	5509	2502	7380	5307	2596
	18	25	8010	5979	1449	10350	7591	1712	9540	7054	2035	9000	6651	2242	8640	6382	2336	8100	5979	2525	7740	5710	2620
	19	27	8280	6181	1471	10710	7994	1734	9900	7390	2058	9360	6987	2266	9000	6718	2360	8460	6315	2525	8100	6046	2620
	22	30	9180	6113	1471	11880	7927	1734	10980	7323	2058	10350	6920	2289	9990	6651	2384	9000	6449	2620	8370	6315	2761
	24	32	9810	6113	1492	12690	7927	1756	11700	7323	2082	11070	6920	2289	10620	6651	2407	9360	6584	2690	8550	6516	2856
1.8+2.5+2.5+3.5+3.5	12	18	7470	5240	1405	8460	6987	1668	7830	6449	1966	7380	6113	2171	7110	5845	2266	6660	5509	2431	6390	5240	2525
	14	20	7470	5240	1405	9090	6987	1668	8460	6516	1989	7920	6113	2195	7650	5912	2289	7110	5509	2454	6840	5307	2572
	16	22	7470	5576	1427	9720	6987	1690	9000	6516	2012	8460	6113	2218	8190	5912	2336	7650	5509	2502	7380	5307	2596
	18	25	8010	5979	1449	10350	7591	1712	9540	7054	2035	9000	6651	2242	8640	6382	2336	8100	5979	2525	7740	5710	2620
	19	27	8280	6181	1471	10710	7994	1734	9900	7390	2058	9360	6987	2266	9000	6718	2360	8460	6315	2525	8100	6046	2620
	22	30	9180	6113	1471	11880	7927	1734	10980	7323	2058	10350	6920	2289	9990	6651	2384	9000	6449	2620	8370	6315	2761
	24	32	9810	6113	1492	12690	7927	1756	11700	7323	2082	11070	6920	2289	10620	6651	2407	9360	6584	2690	8550	6516	2856
1.8+2.5+2.5+3.5+5.0	12	18	7470	5240	1405	8460	6987	1668	7830	6449	1966	7380	6113	2171	7110	5845	2266	6660	5509	2431	6390	5240	2525
	14	20	7470	5240	1405	9090	6987	1668	8460	6516	1989	7920	6113	2195	7650	5912	2289	7110	5509	2454	6840	5307	2572
	16	22	7470	5576	1427	9720	6987	1690	9000	6516	2012	8460	6113	2218	8190	5912	2336	7650	5509	2502	7380	5307	2596
	18	25	8010	5979	1449	10350	7591	1712	9540	7054	2035	9000	6651	2242	8640	6382	2336	8100	5979	2525	7740	5710	2620
	19	27	8280	6181	1471	10710	7994	1734	9900	7390	2058	9360	6987	2266	9000	6718	2360	8460	6315	2525	8100	6046	2620
	22	30	9180	6113	1471	11880	7927	1734	10980	7323	2058	10350	6920	2289	9990	6651	2384	9000	6449	2620	8370	6315	2761
	24	32	9810	6113	1492	12690	7927	1756	11700	7323	2082	11070	6920	2289	10620	6651	2407	9360	6584	2690	8550	6516	2856
1.8+2.5+3.5+3.5+3.5	12	18	7470	5240	1405	8460	6987	1668	7830	6449	1966	7380	6113	2171	7110	5845	2266	6660	5509	2431	6390	5240	2525
	14	20	7470	5240	1405	9090	6987	1668	8460	6516	1989	7920	6113	2195	7650	5912	2289	7110	5509	2454	6840	5307	2572
	16	22	7470	5576	1427	9720	6987	1690	9000	6516	2012	8460	6113	2218	8190	5912	2336	7650	5509	2502	7380	5307	2596
	18	25	8010	5979	1449	10350	7591	1712	9540	7054	2035	9000	6651	2242	8640	6382	2336	8100	5979	2525	7740	5710	2620
	19	27	8280	6181	1471	10710	7994	1734	9900	7390	2058	9360	6987	2266	9000	6718	2360	8460	6315	2525	8100	6046	2620
	22	30	9180	6113	1471	11880	7927	1734	10980	7323	2058	10350	6920	2289	9990	6651	2384	9000	6449	2620	8370	6315	2761
	24	32	9810	6113	1492	12690	7927	1756	11700	7323	2082	11070	6920	2289	10620	6651	2407	9360	6584	2690	8550	6516	2856
2.5+2.5+2.5+2.5+2.5	12	18	7470	5240	1405	8460	6987	1668	7830	6449	1966	7380	6113	2171	7110	5845	2266	6660	5509	2431	6390	5240	2525
	14	20	7470	5240	1405	9090	6987	1668	8460	6516	1989	7920	6113	2195	7650	5912	2289	7110	5509	2454	6840	5307	2572
	16	22	7470	5576	1427	9720	6987	1690	9000	6516	2012	8460	6113	2218	8190	5912	2336	7650	5509	2502	7380	5307	2596
	18	25	8010	5979	1449	10350	7591	1712	9540	7054	2035	9000	6651	2242	8640	6382	2336	8100	5979	2525	7740	5710	2620
	19	27	8280	6181	1471	10710	7994	1734	9900	7390	2058	9360	6987	2266	9000	6718	2360	8460	6315	2525	8100	6046	2620
	22	30	9180	6113	1471	11880	7927	1734	10980	7323	2058	10350	6920	2289	9990	6651	2384	9000	6449	2620	8370	6315	2761
	24	32	9810	6113	1492	12690	7927	1756	11700	7323	2082	11070	6920	2289	10620	6651	2407	9360	6584	2690	8550	6516	2856
2.5+2.5+2.5+2.5+3.5	12	18	7470	5240	1405	8460	6987	1668	7830	6449	1966	7380	6113	2171	7110	5845	2266	6660	5509	2431	6390	5240	2525
	14	20	7470	5240	1405	9090	6987	1668	8460	6516	1989	7920	6113	2195	7650	5912	2289	7110	5509	2454	6840	5307	2572
	16	22	7470	5576	1427	9720	6987	1690	9000	6516	2012	8460	6113	2218	8190	5912	2336	7650	5509	2502	7380	5307	2596
	18	25	8010	5979	1449	10350	7591	1712	9540	7054	2035	9000	6651	2242	8640	6382	2336	8100	5979	2525	7740	5710	2620
	19	27	8280	6181	1471	10710	7994	1734	9900	7390	2058	9360	6987	2266	9000	6718	2360	8460	6315	2525	8100	6046	2620
	22	30	9180	6113	1471	11880	7927	1734	10980	7323	2058	10350	6920	2289	9990	6651	2384	9000	6449	2620	8370	6315	2761
	24	32	9810	6113	1492	12690	7927	1756	11700	7323	2082	11070	6920	2289	10620	6651	2407	9360	6584	2690	8550	6516	2856

EWB : Evaporator Wet Bulb temperature (°C)
EDB : Evaporator Dry Bulb temperature (°C)
(°CDB) : Outdoor Unit Inlet Air Dry Temperature (°C)

TC : Total Capacity (W)
SHC : Sensible Heating Capacity (w)
PI : Power Input

	INDOOR		OUTDOOR TEMPERATURE (°CDB)																				
	EWB	EDB	-10			21			27			32			35			40			43		
	°C	°C	TC	SHC	PI	TC	SHC	PI	TC	SHC	PI	TC	SHC	PI	TC	SHC	PI	TC	SHC	PI	TC	SHC	PI
2.5+2.5+2.5+2.5+5.0	12	18	7470	5240	1405	8460	6987	1668	7830	6449	1966	7380	6113	2171	7110	5845	2266	6660	5509	2431	6390	5240	2525
	14	20	7470	5240	1405	9090	6987	1668	8460	6516	1989	7920	6113	2195	7650	5912	2289	7110	5509	2454	6840	5307	2572
	16	22	7470	5576	1427	9720	6987	1690	9000	6516	2012	8460	6113	2218	8190	5912	2336	7650	5509	2502	7380	5307	2596
	18	25	8010	5979	1449	10350	7591	1712	9540	7054	2035	9000	6651	2242	8640	6382	2336	8100	5979	2525	7740	5710	2620
	19	27	8280	6181	1471	10710	7994	1734	9900	7390	2058	9360	6987	2266	9000	6718	2360	8460	6315	2525	8100	6046	2620
	22	30	9180	6113	1471	11880	7927	1734	10980	7323	2058	10350	6920	2289	9990	6651	2384	9000	6449	2620	8370	6315	2761
	24	32	9810	6113	1492	12690	7927	1756	11700	7323	2082	11070	6920	2289	10620	6651	2407	9360	6584	2690	8550	6516	2856
2.5+2.5+2.5+3.5+3.5	12	18	7470	5240	1405	8460	6987	1668	7830	6449	1966	7380	6113	2171	7110	5845	2266	6660	5509	2431	6390	5240	2525
	14	20	7470	5240	1405	9090	6987	1668	8460	6516	1989	7920	6113	2195	7650	5912	2289	7110	5509	2454	6840	5307	2572
	16	22	7470	5576	1427	9720	6987	1690	9000	6516	2012	8460	6113	2218	8190	5912	2336	7650	5509	2502	7380	5307	2596
	18	25	8010	5979	1449	10350	7591	1712	9540	7054	2035	9000	6651	2242	8640	6382	2336	8100	5979	2525	7740	5710	2620
	19	27	8280	6181	1471	10710	7994	1734	9900	7390	2058	9360	6987	2266	9000	6718	2360	8460	6315	2525	8100	6046	2620
	22	30	9180	6113	1471	11880	7927	1734	10980	7323	2058	10350	6920	2289	9990	6651	2384	9000	6449	2620	8370	6315	2761
	24	32	9810	6113	1492	12690	7927	1756	11700	7323	2082	11070	6920	2289	10620	6651	2407	9360	6584	2690	8550	6516	2856
2.5+2.5+3.5+3.5+3.5	12	18	7470	5240	1405	8460	6987	1668	7830	6449	1966	7380	6113	2171	7110	5845	2266	6660	5509	2431	6390	5240	2525
	14	20	7470	5240	1405	9090	6987	1668	8460	6516	1989	7920	6113	2195	7650	5912	2289	7110	5509	2454	6840	5307	2572
	16	22	7470	5576	1427	9720	6987	1690	9000	6516	2012	8460	6113	2218	8190	5912	2336	7650	5509	2502	7380	5307	2596
	18	25	8010	5979	1449	10350	7591	1712	9540	7054	2035	9000	6651	2242	8640	6382	2336	8100	5979	2525	7740	5710	2620
	19	27	8280	6181	1471	10710	7994	1734	9900	7390	2058	9360	6987	2266	9000	6718	2360	8460	6315	2525	8100	6046	2620
	22	30	9180	6113	1471	11880	7927	1734	10980	7323	2058	10350	6920	2289	9990	6651	2384	9000	6449	2620	8370	6315	2761
	24	32	9810	6113	1492	12690	7927	1756	11700	7323	2082	11070	6920	2289	10620	6651	2407	9360	6584	2690	8550	6516	2856

EWB : Evaporator Wet Bulb temperature (°C)
EDB : Evaporator Dry Bulb temperature (°C)
(°CDB) : Outdoor Unit Inlet Air Dry Temperature (°C)

TC : Total Capacity (W)
SHC : Sensible Heating Capacity (w)
PI : Power Input

HEATING [50Hz, 230V]

	INDOOR	OUTDOOR TEMPERATURE (°CDB)																								
	EDB	-15			-10			-7			-5			0			7			10			15		
	°C	TC	SHC	PI	TC	SHC	PI	TC	SHC	PI	TC	SHC	PI	TC	SHC	PI	TC	SHC	PI	TC	SHC	PI	TC	SHC	PI
RAM-90NP5A	16	3960	0	1820	6270	0	1870	7148	0	1949	7733	0	2002	9416	0	2241	11121	0	2271	12133	0	2332	14003	0	2448
	18	3905	0	1845	6215	0	1894	7080	0	1990	7656	0	2054	9317	0	2298	11066	0	2386	12089	0	2435	13948	0	2563
	20	3850	0	1870	6160	0	1919	7018	0	2022	7590	0	2091	9240	0	2337	11000	0	2460	11825	0	2546	13860	0	2681
	22	3795	0	1894	6105	0	1943	6930	0	2064	7480	0	2145	9141	0	2394	10934	0	2558	11957	0	2640	13794	0	2792
	24	3740	0	1919	6050	0	1968	6868	0	2105	7414	0	2197	9064	0	2450	10868	0	2657	11891	0	2740	13596	0	2905
1.2	16	648	0	355	1026	0	365	1170	0	380	1265	0	391	1541	0	437	1820	0	443	1985	0	455	2291	0	478
	18	639	0	360	1017	0	370	1158	0	388	1253	0	401	1525	0	448	1811	0	466	1978	0	475	2282	0	500
	20	630	0	365	1008	0	374	1148	0	395	1242	0	408	1512	0	456	1800	0	480	1935	0	497	2268	0	523
	22	621	0	370	999	0	379	1134	0	403	1224	0	419	1496	0	467	1789	0	499	1957	0	515	2257	0	545
	24	612	0	374	990	0	384	1124	0	411	1213	0	429	1483	0	478	1778	0	518	1946	0	535	2225	0	567
1.8	16	900	0	577	1425	0	593	1625	0	618	1758	0	635	2140	0	711	2528	0	720	2758	0	739	3183	0	776
	18	888	0	585	1413	0	601	1609	0	631	1740	0	651	2118	0	729	2515	0	757	2748	0	772	3170	0	813
	20	875	0	593	1400	0	608	1595	0	641	1725	0	663	2100	0	741	2500	0	780	2688	0	807	3150	0	850
	22	863	0	601	1388	0	616	1575	0	655	1700	0	680	2078	0	759	2485	0	811	2718	0	837	3135	0	885
	24	850	0	608	1375	0	624	1561	0	668	1685	0	697	2060	0	777	2470	0	842	2703	0	869	3090	0	921
2.5	16	1224	0	844	1938	0	866	2209	0	903	2390	0	928	2910	0	1039	3437	0	1052	3750	0	1081	4328	0	1134
	18	1207	0	855	1921	0	878	2188	0	922	2366	0	952	2880	0	1065	3420	0	1106	3737	0	1129	4311	0	1188
	20	1190	0	866	1904	0	889	2169	0	937	2346	0	969	2856	0	1083	3400	0	1140	3655	0	1180	4284	0	1243
	22	1173	0	878	1887	0	901	2142	0	957	2312	0	994	2825	0	1109	3380	0	1186	3696	0	1223	4264	0	1294
	24	1156	0	889	1870	0	912	2123	0	976	2292	0	1018	2802	0	1135	3359	0	1231	3675	0	1270	4202	0	1346
3.5	16	1548	0	1051	2451	0	1079	2794	0	1125	3023	0	1156	3681	0	1294	4347	0	1311	4743	0	1346	5474	0	1413
	18	1527	0	1065	2430	0	1093	2767	0	1149	2993	0	1186	3642	0	1326	4326	0	1377	4726	0	1406	5452	0	1480
	20	1505	0	1079	2408	0	1108	2743	0	1167	2967	0	1207	3612	0	1349	4300	0	1420	4623	0	1470	5418	0	1548
	22	1484	0	1093	2387	0	1122	2709	0	1192	2924	0	1238	3573	0	1382	4274	0	1477	4674	0	1524	5392	0	1612
	24	1462	0	1108	2365	0	1136	2685	0	1215	2898	0	1268	3543	0	1414	4248	0	1534	4648	0	1582	5315	0	1677
5	16	2340	0	1702	3705	0	1748	4224	0	1823	4570	0	1872	5564	0	2095	6572	0	2123	7170	0	2180	8275	0	2289
	18	2308	0	1725	3673	0	1771	4183	0	1861	4524	0	1921	5506	0	2148	6539	0	2231	7144	0	2277	8242	0	2397
	20	2275	0	1748	3640	0	1794	4147	0	1891	4485	0	1955	5460	0	2185	6500	0	2300	6988	0	2381	8190	0	2507
	22	2243	0	1771	3608	0	1817	4095	0	1930	4420	0	2006	5402	0	2238	6461	0	2392	7066	0	2468	8151	0	2611
	24	2210	0	1794	3575	0	1840	4059	0	1968	4381	0	2054	5356	0	2291	6422	0	2484	7027	0	2562	8034	0	2716
6	16	2628	0	1946	4161	0	1999	4744	0	2084	5132	0	2141	6249	0	2396	7380	0	2427	8052	0	2493	9293	0	2617
	18	2592	0	1973	4125	0	2025	4698	0	2128	5081	0	2196	6183	0	2456	7344	0	2551	8023	0	2604	9256	0	2740
	20	2555	0	1999	4088	0	2051	4657	0	2162	5037	0	2236	6132	0	2499	7300	0	2630	7848	0	2722	9198	0	2867
	22	2519	0	2025	4052	0	2078	4599	0	2207	4964	0	2293	6066	0	2559	7256	0	2735	7935	0	2822	9154	0	2985
	24	2482	0	2051	4015	0	2104	4558	0	2251	4920	0	2349	6015	0	2619	7212	0	2840	7891	0	2930	9023	0	3106
1.2+1.2	16	1296	0	622	2052	0	638	2339	0	666	2531	0	684	3082	0	765	3640	0	775	3971	0	796	4583	0	836
	18	1278	0	630	2034	0	647	2317	0	680	2506	0	701	3049	0	785	3622	0	815	3956	0	832	4565	0	875
	20	1260	0	638	2016	0	655	2297	0	690	2484	0	714	3024	0	798	3600	0	840	3870	0	869	4536	0	916
	22	1242	0	647	1998	0	664	2268	0	705	2448	0	732	2992	0	817	3578	0	874	3913	0	901	4514	0	953
	24	1224	0	655	1980	0	672	2248	0	719	2426	0	750	2966	0	837	3557	0	907	3892	0	936	4450	0	992

EWB : Evaporator Wet Bulb temperature (°C)

EDB : Evaporator Dry Bulb temperature (°C)

(°CDB) : Outdoor Unit Inlet Air Dry Temperature (°C)

TC : Total Capacity (W)

SHC : Sensible Heating Capacity (W)

PI : Power Input

	INDOOR	OUTDOOR TEMPERATURE (°CDB)																							
	EDB	-15			-10			-7			-5			0			7			10			15		
	°C	TC	SHC	PI	TC	SHC	PI	TC	SHC	PI	TC	SHC	PI	TC	SHC	PI	TC	SHC	PI	TC	SHC	PI	TC	SHC	PI
1.2+1.8	16	1548	0	873	2451	0	897	2794	0	935	3023	0	961	3681	0	1075	4347	0	1089	4743	0	1119	5474	0	1174
	18	1527	0	885	2430	0	909	2767	0	955	2993	0	985	3642	0	1102	4326	0	1145	4726	0	1168	5452	0	1230
	20	1505	0	897	2408	0	920	2743	0	970	2967	0	1003	3612	0	1121	4300	0	1180	4623	0	1221	5418	0	1286
	22	1484	0	909	2387	0	932	2709	0	990	2924	0	1029	3573	0	1148	4274	0	1227	4674	0	1266	5392	0	1339
	24	1462	0	920	2365	0	944	2685	0	1010	2898	0	1054	3543	0	1175	4248	0	1274	4648	0	1315	5315	0	1394
1.2+2.5	16	1872	0	947	2964	0	973	3379	0	1014	3656	0	1042	4451	0	1166	5257	0	1181	5736	0	1213	6620	0	1274
	18	1846	0	960	2938	0	986	3347	0	1036	3619	0	1069	4404	0	1196	5231	0	1242	5715	0	1267	6594	0	1334
	20	1820	0	973	2912	0	998	3318	0	1052	3588	0	1088	4368	0	1216	5200	0	1280	5590	0	1325	6552	0	1395
	22	1794	0	986	2886	0	1011	3276	0	1074	3536	0	1116	4321	0	1245	5169	0	1331	5652	0	1373	6521	0	1453
	24	1768	0	998	2860	0	1024	3247	0	1095	3505	0	1143	4285	0	1275	5138	0	1382	5621	0	1426	6427	0	1512
1.2+3.5	16	2196	0	1147	3477	0	1178	3964	0	1228	4288	0	1262	5222	0	1412	6167	0	1431	6728	0	1469	7765	0	1542
	18	2166	0	1163	3447	0	1194	3926	0	1254	4246	0	1294	5167	0	1448	6137	0	1504	6704	0	1535	7735	0	1615
	20	2135	0	1178	3416	0	1209	3892	0	1274	4209	0	1318	5124	0	1473	6100	0	1550	6558	0	1604	7686	0	1690
	22	2105	0	1194	3386	0	1225	3843	0	1301	4148	0	1352	5069	0	1508	6063	0	1612	6631	0	1663	7649	0	1759
	24	2074	0	1209	3355	0	1240	3809	0	1326	4111	0	1384	5026	0	1544	6027	0	1674	6594	0	1727	7540	0	1831
1.2+5	16	2988	0	1791	4731	0	1839	5393	0	1918	5835	0	1970	7105	0	2205	8391	0	2234	9155	0	2294	10566	0	2408
	18	2947	0	1815	4690	0	1863	5342	0	1958	5777	0	2021	7030	0	2260	8350	0	2347	9122	0	2396	10524	0	2522
	20	2905	0	1839	4648	0	1888	5295	0	1989	5727	0	2057	6972	0	2299	8300	0	2420	8923	0	2505	10458	0	2638
	22	2864	0	1863	4607	0	1912	5229	0	2031	5644	0	2110	6897	0	2355	8250	0	2517	9022	0	2597	10408	0	2747
	24	2822	0	1888	4565	0	1936	5183	0	2071	5594	0	2161	6839	0	2410	8200	0	2614	8972	0	2696	10259	0	2858
1.2+6	16	3276	0	1961	5187	0	2014	5913	0	2100	6397	0	2157	7790	0	2414	9200	0	2446	10037	0	2512	11584	0	2637
	18	3231	0	1988	5142	0	2041	5857	0	2144	6334	0	2213	7708	0	2475	9155	0	2571	10001	0	2624	11539	0	2761
	20	3185	0	2014	5096	0	2067	5806	0	2178	6279	0	2253	7644	0	2518	9100	0	2650	9783	0	2743	11466	0	2889
	22	3140	0	2041	5051	0	2094	5733	0	2224	6188	0	2311	7562	0	2578	9045	0	2756	9892	0	2843	11411	0	3008
	24	3094	0	2067	5005	0	2120	5682	0	2268	6133	0	2366	7498	0	2639	8991	0	2862	9837	0	2952	11248	0	3130
1.8+1.8	16	1800	0	918	2850	0	942	3249	0	983	3515	0	1009	4280	0	1130	5055	0	1145	5515	0	1176	6365	0	1234
	18	1775	0	930	2825	0	955	3218	0	1003	3480	0	1035	4235	0	1158	5030	0	1203	5495	0	1228	6340	0	1292
	20	1750	0	942	2800	0	967	3190	0	1019	3450	0	1054	4200	0	1178	5000	0	1240	5375	0	1283	6300	0	1352
	22	1725	0	955	2775	0	980	3150	0	1041	3400	0	1081	4155	0	1207	4970	0	1290	5435	0	1331	6270	0	1407
	24	1700	0	967	2750	0	992	3122	0	1061	3370	0	1107	4120	0	1235	4940	0	1339	5405	0	1381	6180	0	1464
1.8+2.5	16	2124	0	1132	3363	0	1163	3834	0	1212	4148	0	1245	5050	0	1394	5965	0	1412	6508	0	1450	7511	0	1522
	18	2095	0	1148	3334	0	1178	3797	0	1238	4106	0	1278	4997	0	1429	5935	0	1484	6484	0	1515	7481	0	1594
	20	2065	0	1163	3304	0	1193	3764	0	1258	4071	0	1301	4956	0	1454	5900	0	1530	6343	0	1584	7434	0	1668
	22	2036	0	1178	3275	0	1209	3717	0	1284	4012	0	1334	4903	0	1489	5865	0	1591	6413	0	1642	7399	0	1737
	24	2006	0	1193	3245	0	1224	3684	0	1309	3977	0	1366	4862	0	1524	5829	0	1652	6378	0	1704	7292	0	1807
1.8+3.5	16	2448	0	1384	3876	0	1421	4419	0	1482	4780	0	1522	5821	0	1704	6875	0	1726	7500	0	1773	8656	0	1861
	18	2414	0	1403	3842	0	1440	4376	0	1513	4733	0	1561	5760	0	1747	6841	0	1814	7473	0	1851	8622	0	1949
	20	2380	0	1421	3808	0	1459	4338	0	1537	4692	0	1590	5712	0	1777	6800	0	1870	7310	0	1935	8568	0	2038
	22	2346	0	1440	3774	0	1477	4284	0	1569	4624	0	1631	5651	0	1820	6759	0	1945	7392	0	2007	8527	0	2122
	24	2312	0	1459	3740	0	1496	4246	0	1600	4583	0	1670	5603	0	1863	6718	0	2020	7351	0	2083	8405	0	2208

EWB : Evaporator Wet Bulb temperature (°C)
EDB : Evaporator Dry Bulb temperature (°C)
(°CDB) : Outdoor Unit Inlet Air Dry Temperature (°C)

TC : Total Capacity (W)
SHC : Sensible Heating Capacity (W)
PI : Power Input

	INDOOR	OUTDOOR TEMPERATURE (°CDB)																							
	EDB	-15			-10			-7			-5			0			7			10			15		
	°C	TC	SHC	PI	TC	SHC	PI	TC	SHC	PI	TC	SHC	PI	TC	SHC	PI	TC	SHC	PI	TC	SHC	PI	TC	SHC	PI
1.8+5	16	3096	0	1828	4902	0	1877	5588	0	1957	6046	0	2011	7362	0	2250	8695	0	2280	9486	0	2342	10948	0	2458
	18	3053	0	1853	4859	0	1902	5535	0	1998	5986	0	2062	7284	0	2307	8652	0	2396	9451	0	2445	10905	0	2574
	20	3010	0	1877	4816	0	1927	5487	0	2030	5934	0	2100	7224	0	2347	8600	0	2470	9245	0	2556	10836	0	2692
	22	2967	0	1902	4773	0	1951	5418	0	2073	5848	0	2154	7147	0	2403	8548	0	2569	9348	0	2650	10784	0	2803
	24	2924	0	1927	4730	0	1976	5370	0	2114	5796	0	2206	7086	0	2460	8497	0	2668	9297	0	2752	10630	0	2917
1.8+6	16	3384	0	2050	5358	0	2105	6108	0	2195	6608	0	2255	8046	0	2523	9503	0	2557	10368	0	2626	11966	0	2756
	18	3337	0	2078	5311	0	2133	6050	0	2241	6542	0	2313	7962	0	2587	9456	0	2687	10331	0	2742	11919	0	2886
	20	3290	0	2105	5264	0	2161	5997	0	2277	6486	0	2355	7896	0	2632	9400	0	2770	10105	0	2867	11844	0	3019
	22	3243	0	2133	5217	0	2188	5922	0	2325	6392	0	2415	7811	0	2695	9344	0	2881	10218	0	2972	11788	0	3144
	24	3196	0	2161	5170	0	2216	5869	0	2371	6336	0	2474	7746	0	2759	9287	0	2992	10161	0	3086	11618	0	3271
2.5+2.5	16	2448	0	1339	3876	0	1376	4419	0	1434	4780	0	1473	5821	0	1649	6875	0	1671	7500	0	1716	8656	0	1801
	18	2414	0	1358	3842	0	1394	4376	0	1464	4733	0	1511	5760	0	1691	6841	0	1756	7473	0	1792	8622	0	1886
	20	2380	0	1376	3808	0	1412	4338	0	1488	4692	0	1539	5712	0	1720	6800	0	1810	7310	0	1873	8568	0	1973
	22	2346	0	1394	3774	0	1430	4284	0	1519	4624	0	1578	5651	0	1761	6759	0	1882	7392	0	1942	8527	0	2054
	24	2312	0	1412	3740	0	1448	4246	0	1549	4583	0	1616	5603	0	1803	6718	0	1955	7351	0	2016	8405	0	2138
2.5+3.5	16	2772	0	1598	4389	0	1642	5003	0	1712	5413	0	1758	6591	0	1968	7785	0	1994	8493	0	2048	9802	0	2149
	18	2734	0	1620	4351	0	1663	4956	0	1747	5359	0	1804	6522	0	2017	7746	0	2095	8462	0	2138	9764	0	2251
	20	2695	0	1642	4312	0	1685	4913	0	1776	5313	0	1836	6468	0	2052	7700	0	2160	8278	0	2236	9702	0	2354
	22	2657	0	1663	4274	0	1706	4851	0	1813	5236	0	1884	6399	0	2102	7654	0	2246	8370	0	2318	9656	0	2452
	24	2618	0	1685	4235	0	1728	4808	0	1849	5190	0	1929	6345	0	2151	7608	0	2333	8324	0	2406	9517	0	2551
2.5+5	16	3312	0	2013	5244	0	2067	5978	0	2155	6468	0	2214	7875	0	2478	9301	0	2511	10148	0	2579	11712	0	2706
	18	3266	0	2040	5198	0	2094	5921	0	2200	6403	0	2271	7792	0	2540	9255	0	2638	10111	0	2693	11666	0	2834
	20	3220	0	2067	5152	0	2122	5870	0	2236	6348	0	2312	7728	0	2584	9200	0	2720	9890	0	2815	11592	0	2965
	22	3174	0	2094	5106	0	2149	5796	0	2283	6256	0	2372	7645	0	2647	9145	0	2829	10000	0	2919	11537	0	3087
	24	3128	0	2122	5060	0	2176	5744	0	2328	6201	0	2429	7581	0	2709	9090	0	2938	9945	0	3030	11371	0	3212
2.5+6	16	3492	0	2176	5529	0	2234	6303	0	2330	6819	0	2393	8303	0	2678	9807	0	2714	10699	0	2787	12348	0	2925
	18	3444	0	2205	5481	0	2264	6243	0	2378	6751	0	2455	8216	0	2746	9758	0	2852	10660	0	2911	12300	0	3063
	20	3395	0	2234	5432	0	2293	6189	0	2417	6693	0	2499	8148	0	2793	9700	0	2940	10428	0	3043	12222	0	3205
	22	3347	0	2264	5384	0	2323	6111	0	2467	6596	0	2564	8061	0	2861	9642	0	3058	10544	0	3155	12164	0	3337
	24	3298	0	2293	5335	0	2352	6057	0	2516	6538	0	2625	7993	0	2928	9584	0	3175	10486	0	3275	11989	0	3472
3.5+3.5	16	3096	0	1820	4902	0	1870	5588	0	1949	6046	0	2002	7362	0	2241	8695	0	2271	9486	0	2332	10948	0	2448
	18	3053	0	1845	4859	0	1894	5535	0	1990	5986	0	2054	7284	0	2298	8652	0	2386	9451	0	2435	10905	0	2563
	20	3010	0	1870	4816	0	1919	5487	0	2022	5934	0	2091	7224	0	2337	8600	0	2460	9245	0	2546	10836	0	2681
	22	2967	0	1894	4773	0	1943	5418	0	2064	5848	0	2145	7147	0	2394	8548	0	2558	9348	0	2640	10784	0	2792
	24	2924	0	1919	4730	0	1968	5370	0	2105	5796	0	2197	7086	0	2450	8497	0	2657	9297	0	2740	10630	0	2905
3.5+5	16	3492	0	2176	5529	0	2234	6303	0	2330	6819	0	2393	8303	0	2678	9807	0	2714	10699	0	2787	12348	0	2925
	18	3444	0	2205	5481	0	2264	6243	0	2378	6751	0	2455	8216	0	2746	9758	0	2852	10660	0	2911	12300	0	3063
	20	3395	0	2234	5432	0	2293	6189	0	2417	6693	0	2499	8148	0	2793	9700	0	2940	10428	0	3043	12222	0	3205
	22	3347	0	2264	5384	0	2323	6111	0	2467	6596	0	2564	8061	0	2861	9642	0	3058	10544	0	3155	12164	0	3337
	24	3298	0	2293	5335	0	2352	6057	0	2516	6538	0	2625	7993	0	2928	9584	0	3175	10486	0	3275	11989	0	3472

EWB : Evaporator Wet Bulb temperature (°C)

EDB : Evaporator Dry Bulb temperature (°C)

(°CDB) : Outdoor Unit Inlet Air Dry Temperature (°C)

TC : Total Capacity (W)

SHC : Sensible Heating Capacity (W)

PI : Power Input

	INDOOR	OUTDOOR TEMPERATURE (°CDB)																							
	EDB	-15			-10			-7			-5			0			7			10			15		
	°C	TC	SHC	PI	TC	SHC	PI	TC	SHC	PI	TC	SHC	PI	TC	SHC	PI	TC	SHC	PI	TC	SHC	PI	TC	SHC	PI
3.5+6	16	3672	0	2316	5814	0	2379	6628	0	2480	7171	0	2548	8731	0	2851	10312	0	2889	11251	0	2967	12985	0	3114
	18	3621	0	2348	5763	0	2410	6565	0	2532	7099	0	2614	8639	0	2923	10261	0	3036	11210	0	3099	12934	0	3261
	20	3570	0	2379	5712	0	2441	6508	0	2573	7038	0	2661	8568	0	2974	10200	0	3130	10965	0	3240	12852	0	3412
	22	3519	0	2410	5661	0	2473	6426	0	2627	6936	0	2729	8476	0	3045	10139	0	3255	11087	0	3358	12791	0	3553
	24	3468	0	2441	5610	0	2504	6369	0	2679	6875	0	2795	8405	0	3117	10078	0	3380	11026	0	3487	12607	0	3697
5+5	16	3672	0	2116	5814	0	2174	6628	0	2266	7171	0	2328	8731	0	2605	10312	0	2640	11251	0	2711	12985	0	2846
	18	3621	0	2145	5763	0	2202	6565	0	2314	7099	0	2388	8639	0	2671	10261	0	2774	11210	0	2831	12934	0	2980
	20	3570	0	2174	5712	0	2231	6508	0	2351	7038	0	2431	8568	0	2717	10200	0	2860	10965	0	2960	12852	0	3117
	22	3519	0	2202	5661	0	2259	6426	0	2400	6936	0	2494	8476	0	2783	10139	0	2974	11087	0	3069	12791	0	3246
	24	3468	0	2231	5610	0	2288	6369	0	2448	6875	0	2554	8405	0	2849	10078	0	3089	11026	0	3186	12607	0	3378
5+6	16	3744	0	2324	5928	0	2386	6758	0	2488	7311	0	2556	8902	0	2861	10514	0	2898	11471	0	2977	13239	0	3124
	18	3692	0	2355	5876	0	2418	6693	0	2540	7238	0	2622	8809	0	2933	10462	0	3046	11430	0	3109	13187	0	3272
	20	3640	0	2386	5824	0	2449	6635	0	2581	7176	0	2669	8736	0	2983	10400	0	3140	11180	0	3250	13104	0	3423
	22	3588	0	2418	5772	0	2481	6552	0	2635	7072	0	2738	8642	0	3055	10338	0	3266	11305	0	3369	13042	0	3564
	24	3536	0	2449	5720	0	2512	6494	0	2687	7010	0	2804	8570	0	3127	10275	0	3391	11242	0	3498	12854	0	3708
6+6	16	3960	0	2605	6270	0	2675	7148	0	2789	7733	0	2865	9416	0	3207	11121	0	3249	12133	0	3337	14003	0	3502
	18	3905	0	2640	6215	0	2710	7080	0	2848	7656	0	2939	9317	0	3288	11066	0	3414	12089	0	3485	13948	0	3668
	20	3850	0	2675	6160	0	2746	7018	0	2893	7590	0	2992	9240	0	3344	11000	0	3520	11825	0	3643	13860	0	3837
	22	3795	0	2710	6105	0	2781	6930	0	2954	7480	0	3069	9141	0	3425	10934	0	3661	11957	0	3777	13794	0	3995
	24	3740	0	2746	6050	0	2816	6868	0	3012	7414	0	3143	9064	0	3506	10868	0	3802	11891	0	3921	13596	0	4157
1.2+1.2+1.2	16	1944	0	977	3078	0	1003	3509	0	1046	3796	0	1074	4622	0	1203	5459	0	1218	5956	0	1251	6874	0	1313
	18	1917	0	990	3051	0	1016	3475	0	1068	3758	0	1102	4574	0	1233	5432	0	1280	5935	0	1307	6847	0	1375
	20	1890	0	1003	3024	0	1030	3445	0	1085	3726	0	1122	4536	0	1254	5400	0	1320	5805	0	1366	6804	0	1439
	22	1863	0	1016	2997	0	1043	3402	0	1108	3672	0	1151	4487	0	1284	5368	0	1373	5870	0	1416	6772	0	1498
	24	1836	0	1030	2970	0	1056	3372	0	1130	3640	0	1179	4450	0	1315	5335	0	1426	5837	0	1470	6674	0	1559
1.2+1.2+1.8	16	2196	0	1169	3477	0	1201	3964	0	1252	4288	0	1286	5222	0	1439	6167	0	1458	6728	0	1498	7765	0	1572
	18	2166	0	1185	3447	0	1217	3926	0	1278	4246	0	1319	5167	0	1476	6137	0	1533	6704	0	1564	7735	0	1646
	20	2135	0	1201	3416	0	1232	3892	0	1299	4209	0	1343	5124	0	1501	6100	0	1580	6558	0	1635	7686	0	1722
	22	2105	0	1217	3386	0	1248	3843	0	1326	4148	0	1378	5069	0	1537	6063	0	1643	6631	0	1695	7649	0	1793
	24	2074	0	1232	3355	0	1264	3809	0	1352	4111	0	1411	5026	0	1574	6027	0	1706	6594	0	1760	7540	0	1866
1.2+1.2+2.5	16	2520	0	1406	3990	0	1444	4549	0	1506	4921	0	1547	5992	0	1731	7077	0	1754	7721	0	1801	8911	0	1891
	18	2485	0	1425	3955	0	1463	4505	0	1537	4872	0	1587	5929	0	1775	7042	0	1843	7693	0	1881	8876	0	1980
	20	2450	0	1444	3920	0	1482	4466	0	1562	4830	0	1615	5880	0	1805	7000	0	1900	7525	0	1967	8820	0	2071
	22	2415	0	1463	3885	0	1501	4410	0	1594	4760	0	1657	5817	0	1849	6958	0	1976	7609	0	2039	8778	0	2157
	24	2380	0	1482	3850	0	1520	4371	0	1626	4718	0	1697	5768	0	1892	6916	0	2052	7567	0	2117	8652	0	2244
1.2+1.2+3.5	16	2844	0	1613	4503	0	1657	5133	0	1727	5554	0	1775	6762	0	1986	7987	0	2012	8714	0	2067	10057	0	2169
	18	2805	0	1635	4464	0	1679	5084	0	1764	5498	0	1820	6691	0	2036	7947	0	2115	8682	0	2158	10017	0	2272
	20	2765	0	1657	4424	0	1700	5040	0	1792	5451	0	1853	6636	0	2071	7900	0	2180	8493	0	2256	9954	0	2376
	22	2726	0	1679	4385	0	1722	4977	0	1829	5372	0	1901	6565	0	2121	7853	0	2267	8587	0	2339	9907	0	2474
	24	2686	0	1700	4345	0	1744	4933	0	1866	5325	0	1947	6510	0	2171	7805	0	2354	8540	0	2429	9764	0	2575

EWB : Evaporator Wet Bulb temperature (°C)
EDB : Evaporator Dry Bulb temperature (°C)
(°CDB) : Outdoor Unit Inlet Air Dry Temperature (°C)

TC : Total Capacity (W)
SHC : Sensible Heating Capacity (W)
PI : Power Input

	INDOOR	OUTDOOR TEMPERATURE (°CDB)																							
	EDB	-15			-10			-7			-5			0			7			10			15		
	°C	TC	SHC	PI	TC	SHC	PI	TC	SHC	PI	TC	SHC	PI	TC	SHC	PI	TC	SHC	PI	TC	SHC	PI	TC	SHC	PI
1.2+1.2+5	16	3636	0	2020	5757	0	2075	6563	0	2163	7100	0	2222	8646	0	2487	10211	0	2520	11140	0	2588	12857	0	2716
	18	3586	0	2048	5707	0	2102	6500	0	2209	7030	0	2280	8555	0	2550	10161	0	2648	11100	0	2703	12807	0	2845
	20	3535	0	2075	5656	0	2129	6444	0	2244	6969	0	2321	8484	0	2594	10100	0	2730	10858	0	2826	12726	0	2976
	22	3485	0	2102	5606	0	2157	6363	0	2291	6868	0	2381	8393	0	2656	10039	0	2839	10979	0	2929	12665	0	3099
	24	3434	0	2129	5555	0	2184	6306	0	2336	6807	0	2438	8322	0	2719	9979	0	2948	10918	0	3041	12484	0	3224
1.2+1.2+6	16	3924	0	2124	6213	0	2181	7083	0	2274	7663	0	2336	9330	0	2615	11020	0	2649	12023	0	2721	13876	0	2856
	18	3870	0	2153	6159	0	2210	7015	0	2322	7586	0	2396	9232	0	2681	10965	0	2784	11979	0	2841	13821	0	2991
	20	3815	0	2181	6104	0	2239	6954	0	2359	7521	0	2440	9156	0	2727	10900	0	2870	11718	0	2970	13734	0	3128
	22	3761	0	2210	6050	0	2267	6867	0	2409	7412	0	2503	9058	0	2793	10835	0	2985	11848	0	3080	13669	0	3257
	24	3706	0	2239	5995	0	2296	6806	0	2456	7347	0	2563	8982	0	2859	10769	0	3100	11783	0	3197	13472	0	3389
1.2+1.8+1.8	16	2448	0	1391	3876	0	1429	4419	0	1490	4780	0	1530	5821	0	1713	6875	0	1735	7500	0	1782	8656	0	1871
	18	2414	0	1410	3842	0	1448	4376	0	1521	4733	0	1570	5760	0	1756	6841	0	1824	7473	0	1861	8622	0	1959
	20	2380	0	1429	3808	0	1466	4338	0	1545	4692	0	1598	5712	0	1786	6800	0	1880	7310	0	1946	8568	0	2049
	22	2346	0	1448	3774	0	1485	4284	0	1578	4624	0	1639	5651	0	1829	6759	0	1955	7392	0	2017	8527	0	2134
	24	2312	0	1466	3740	0	1504	4246	0	1609	4583	0	1679	5603	0	1872	6718	0	2030	7351	0	2094	8405	0	2220
1.2+1.8+2.5	16	2772	0	1576	4389	0	1619	5003	0	1688	5413	0	1734	6591	0	1940	7785	0	1966	8493	0	2019	9802	0	2119
	18	2734	0	1598	4351	0	1640	4956	0	1723	5359	0	1779	6522	0	1989	7746	0	2066	8462	0	2109	9764	0	2219
	20	2695	0	1619	4312	0	1661	4913	0	1751	5313	0	1811	6468	0	2024	7700	0	2130	8278	0	2205	9702	0	2322
	22	2657	0	1640	4274	0	1683	4851	0	1787	5236	0	1857	6399	0	2072	7654	0	2215	8370	0	2285	9656	0	2418
	24	2618	0	1661	4235	0	1704	4808	0	1823	5190	0	1902	6345	0	2121	7608	0	2300	8324	0	2373	9517	0	2516
1.2+1.8+3.5	16	3096	0	1739	4902	0	1786	5588	0	1862	6046	0	1913	7362	0	2141	8695	0	2169	9486	0	2228	10948	0	2338
	18	3053	0	1763	4859	0	1810	5535	0	1901	5986	0	1962	7284	0	2195	8652	0	2280	9451	0	2327	10905	0	2449
	20	3010	0	1786	4816	0	1833	5487	0	1932	5934	0	1998	7224	0	2233	8600	0	2350	9245	0	2432	10836	0	2562
	22	2967	0	1810	4773	0	1857	5418	0	1972	5848	0	2049	7147	0	2287	8548	0	2444	9348	0	2522	10784	0	2667
	24	2924	0	1833	4730	0	1880	5370	0	2011	5796	0	2099	7086	0	2341	8497	0	2538	9297	0	2618	10630	0	2775
1.2+1.8+5	16	3888	0	2109	6156	0	2166	7018	0	2258	7592	0	2320	9245	0	2596	10919	0	2631	11912	0	2702	13748	0	2836
	18	3834	0	2138	6102	0	2195	6951	0	2306	7517	0	2380	9148	0	2662	10865	0	2765	11869	0	2822	13694	0	2970
	20	3780	0	2166	6048	0	2223	6890	0	2343	7452	0	2423	9072	0	2708	10800	0	2850	11610	0	2950	13608	0	3107
	22	3726	0	2195	5994	0	2252	6804	0	2392	7344	0	2485	8975	0	2773	10735	0	2964	11740	0	3058	13543	0	3235
	24	3672	0	2223	5940	0	2280	6744	0	2439	7279	0	2545	8899	0	2839	10670	0	3078	11675	0	3175	13349	0	3366
1.2+1.8+6	16	3960	0	2139	6270	0	2196	7148	0	2290	7733	0	2352	9416	0	2633	11121	0	2667	12133	0	2740	14003	0	2876
	18	3905	0	2168	6215	0	2225	7080	0	2338	7656	0	2413	9317	0	2699	11066	0	2803	12089	0	2861	13948	0	3011
	20	3850	0	2196	6160	0	2254	7018	0	2376	7590	0	2457	9240	0	2746	11000	0	2890	11825	0	2991	13860	0	3150
	22	3795	0	2225	6105	0	2283	6930	0	2425	7480	0	2520	9141	0	2812	10934	0	3006	11957	0	3101	13794	0	3280
	24	3740	0	2254	6050	0	2312	6868	0	2473	7414	0	2581	9064	0	2878	10868	0	3121	11891	0	3219	13596	0	3413
1.2+2.5+2.5	16	3096	0	1739	4902	0	1786	5588	0	1862	6046	0	1913	7362	0	2141	8695	0	2169	9486	0	2228	10948	0	2338
	18	3053	0	1763	4859	0	1810	5535	0	1901	5986	0	1962	7284	0	2195	8652	0	2280	9451	0	2327	10905	0	2449
	20	3010	0	1786	4816	0	1833	5487	0	1932	5934	0	1998	7224	0	2233	8600	0	2350	9245	0	2432	10836	0	2562
	22	2967	0	1810	4773	0	1857	5418	0	1972	5848	0	2049	7147	0	2287	8548	0	2444	9348	0	2522	10784	0	2667
	24	2924	0	1833	4730	0	1880	5370	0	2011	5796	0	2099	7086	0	2341	8497	0	2538	9297	0	2618	10630	0	2775

EWB : Evaporator Wet Bulb temperature (°C)
EDB : Evaporator Dry Bulb temperature (°C)
(°CDB) : Outdoor Unit Inlet Air Dry Temperature (°C)

TC : Total Capacity (W)
SHC : Sensible Heating Capacity (W)
PI : Power Input

	INDOOR	OUTDOOR TEMPERATURE (°CDB)																							
	EDB	-15			-10			-7			-5			0			7			10			15		
	°C	TC	SHC	PI	TC	SHC	PI	TC	SHC	PI	TC	SHC	PI	TC	SHC	PI	TC	SHC	PI	TC	SHC	PI	TC	SHC	PI
1.2+2.5+3.5	16	3420	0	1939	5415	0	1991	6173	0	2076	6679	0	2133	8132	0	2387	9605	0	2418	10479	0	2484	12094	0	2607
	18	3373	0	1965	5368	0	2017	6114	0	2120	6612	0	2188	8047	0	2447	9557	0	2541	10441	0	2594	12046	0	2730
	20	3325	0	1991	5320	0	2044	6061	0	2154	6555	0	2227	7980	0	2489	9500	0	2620	10213	0	2712	11970	0	2856
	22	3278	0	2017	5273	0	2070	5985	0	2199	6460	0	2285	7895	0	2549	9443	0	2725	10327	0	2811	11913	0	2974
	24	3230	0	2044	5225	0	2096	5932	0	2242	6403	0	2340	7828	0	2610	9386	0	2830	10270	0	2919	11742	0	3094
1.2+2.5+5	16	3960	0	2139	6270	0	2196	7148	0	2290	7733	0	2352	9416	0	2633	11121	0	2667	12133	0	2740	14003	0	2876
	18	3905	0	2168	6215	0	2225	7080	0	2338	7656	0	2413	9317	0	2699	11066	0	2803	12089	0	2861	13948	0	3011
	20	3850	0	2196	6160	0	2254	7018	0	2376	7590	0	2457	9240	0	2746	11000	0	2890	11825	0	2991	13860	0	3150
	22	3795	0	2225	6105	0	2283	6930	0	2425	7480	0	2520	9141	0	2812	10934	0	3006	11957	0	3101	13794	0	3280
	24	3740	0	2254	6050	0	2312	6868	0	2473	7414	0	2581	9064	0	2878	10868	0	3121	11891	0	3219	13596	0	3413
1.2+2.5+6	16	3960	0	2139	6270	0	2196	7148	0	2290	7733	0	2352	9416	0	2633	11121	0	2667	12133	0	2740	14003	0	2876
	18	3905	0	2168	6215	0	2225	7080	0	2338	7656	0	2413	9317	0	2699	11066	0	2803	12089	0	2861	13948	0	3011
	20	3850	0	2196	6160	0	2254	7018	0	2376	7590	0	2457	9240	0	2746	11000	0	2890	11825	0	2991	13860	0	3150
	22	3795	0	2225	6105	0	2283	6930	0	2425	7480	0	2520	9141	0	2812	10934	0	3006	11957	0	3101	13794	0	3280
	24	3740	0	2254	6050	0	2312	6868	0	2473	7414	0	2581	9064	0	2878	10868	0	3121	11891	0	3219	13596	0	3413
1.2+3.5+3.5	16	3744	0	2213	5928	0	2272	6758	0	2369	7311	0	2434	8902	0	2724	10514	0	2760	11471	0	2835	13239	0	2975
	18	3692	0	2243	5876	0	2302	6693	0	2419	7238	0	2497	8809	0	2793	10462	0	2900	11430	0	2960	13187	0	3116
	20	3640	0	2272	5824	0	2332	6635	0	2458	7176	0	2542	8736	0	2841	10400	0	2990	11180	0	3095	13104	0	3259
	22	3588	0	2302	5772	0	2362	6552	0	2509	7072	0	2607	8642	0	2909	10338	0	3110	11305	0	3208	13042	0	3394
	24	3536	0	2332	5720	0	2392	6494	0	2559	7010	0	2670	8570	0	2978	10275	0	3229	11242	0	3331	12854	0	3531
1.2+3.5+5	16	3960	0	2139	6270	0	2196	7148	0	2290	7733	0	2352	9416	0	2633	11121	0	2667	12133	0	2740	14003	0	2876
	18	3905	0	2168	6215	0	2225	7080	0	2338	7656	0	2413	9317	0	2699	11066	0	2803	12089	0	2861	13948	0	3011
	20	3850	0	2196	6160	0	2254	7018	0	2376	7590	0	2457	9240	0	2746	11000	0	2890	11825	0	2991	13860	0	3150
	22	3795	0	2225	6105	0	2283	6930	0	2425	7480	0	2520	9141	0	2812	10934	0	3006	11957	0	3101	13794	0	3280
	24	3740	0	2254	6050	0	2312	6868	0	2473	7414	0	2581	9064	0	2878	10868	0	3121	11891	0	3219	13596	0	3413
1.2+3.5+6	16	3960	0	2139	6270	0	2196	7148	0	2290	7733	0	2352	9416	0	2633	11121	0	2667	12133	0	2740	14003	0	2876
	18	3905	0	2168	6215	0	2225	7080	0	2338	7656	0	2413	9317	0	2699	11066	0	2803	12089	0	2861	13948	0	3011
	20	3850	0	2196	6160	0	2254	7018	0	2376	7590	0	2457	9240	0	2746	11000	0	2890	11825	0	2991	13860	0	3150
	22	3795	0	2225	6105	0	2283	6930	0	2425	7480	0	2520	9141	0	2812	10934	0	3006	11957	0	3101	13794	0	3280
	24	3740	0	2254	6050	0	2312	6868	0	2473	7414	0	2581	9064	0	2878	10868	0	3121	11891	0	3219	13596	0	3413
1.2+5+5	16	3960	0	2139	6270	0	2196	7148	0	2290	7733	0	2352	9416	0	2633	11121	0	2667	12133	0	2740	14003	0	2876
	18	3905	0	2168	6215	0	2225	7080	0	2338	7656	0	2413	9317	0	2699	11066	0	2803	12089	0	2861	13948	0	3011
	20	3850	0	2196	6160	0	2254	7018	0	2376	7590	0	2457	9240	0	2746	11000	0	2890	11825	0	2991	13860	0	3150
	22	3795	0	2225	6105	0	2283	6930	0	2425	7480	0	2520	9141	0	2812	10934	0	3006	11957	0	3101	13794	0	3280
	24	3740	0	2254	6050	0	2312	6868	0	2473	7414	0	2581	9064	0	2878	10868	0	3121	11891	0	3219	13596	0	3413
1.2+5+6	16	3960	0	2139	6270	0	2196	7148	0	2290	7733	0	2352	9416	0	2633	11121	0	2667	12133	0	2740	14003	0	2876
	18	3905	0	2168	6215	0	2225	7080	0	2338	7656	0	2413	9317	0	2699	11066	0	2803	12089	0	2861	13948	0	3011
	20	3850	0	2196	6160	0	2254	7018	0	2376	7590	0	2457	9240	0	2746	11000	0	2890	11825	0	2991	13860	0	3150
	22	3795	0	2225	6105	0	2283	6930	0	2425	7480	0	2520	9141	0	2812	10934	0	3006	11957	0	3101	13794	0	3280
	24	3740	0	2254	6050	0	2312	6868	0	2473	7414	0	2581	9064	0	2878	10868	0	3121	11891	0	3219	13596	0	3413

EWB : Evaporator Wet Bulb temperature (°C)
EDB : Evaporator Dry Bulb temperature (°C)
(°CDB) : Outdoor Unit Inlet Air Dry Temperature (°C)

TC : Total Capacity (W)
SHC : Sensible Heating Capacity (W)
PI : Power Input

	INDOOR	OUTDOOR TEMPERATURE (°CDB)																							
	EDB	-15			-10			-7			-5			0			7			10			15		
	°C	TC	SHC	PI	TC	SHC	PI	TC	SHC	PI	TC	SHC	PI	TC	SHC	PI	TC	SHC	PI	TC	SHC	PI	TC	SHC	PI
1.2+6+6	16	3960	0	2139	6270	0	2196	7148	0	2290	7733	0	2352	9416	0	2633	11121	0	2667	12133	0	2740	14003	0	2876
	18	3905	0	2168	6215	0	2225	7080	0	2338	7656	0	2413	9317	0	2699	11066	0	2803	12089	0	2861	13948	0	3011
	20	3850	0	2196	6160	0	2254	7018	0	2376	7590	0	2457	9240	0	2746	11000	0	2890	11825	0	2991	13860	0	3150
	22	3795	0	2225	6105	0	2283	6930	0	2425	7480	0	2520	9141	0	2812	10934	0	3006	11957	0	3101	13794	0	3280
	24	3740	0	2254	6050	0	2312	6868	0	2473	7414	0	2581	9064	0	2878	10868	0	3121	11891	0	3219	13596	0	3413
1.8+1.8+1.8	16	2700	0	1495	4275	0	1535	4874	0	1601	5273	0	1644	6420	0	1840	7583	0	1864	8273	0	1915	9548	0	2010
	18	2663	0	1515	4238	0	1555	4827	0	1634	5220	0	1687	6353	0	1887	7545	0	1959	8243	0	2000	9510	0	2105
	20	2625	0	1535	4200	0	1576	4785	0	1660	5175	0	1717	6300	0	1919	7500	0	2020	8063	0	2091	9450	0	2202
	22	2588	0	1555	4163	0	1596	4725	0	1695	5100	0	1761	6233	0	1965	7455	0	2101	8153	0	2167	9405	0	2293
	24	2550	0	1576	4125	0	1616	4683	0	1729	5055	0	1804	6180	0	2012	7410	0	2182	8108	0	2250	9270	0	2386
1.8+1.8+2.5	16	2880	0	1635	4560	0	1680	5198	0	1751	5624	0	1799	6848	0	2013	8088	0	2040	8824	0	2095	10184	0	2199
	18	2840	0	1658	4520	0	1702	5149	0	1788	5568	0	1845	6776	0	2064	8048	0	2144	8792	0	2188	10144	0	2303
	20	2800	0	1680	4480	0	1724	5104	0	1817	5520	0	1879	6720	0	2100	8000	0	2210	8600	0	2287	10080	0	2409
	22	2760	0	1702	4440	0	1746	5040	0	1855	5440	0	1927	6648	0	2150	7952	0	2298	8696	0	2371	10032	0	2508
	24	2720	0	1724	4400	0	1768	4995	0	1891	5392	0	1974	6592	0	2201	7904	0	2387	8648	0	2462	9888	0	2610
1.8+1.8+3.5	16	3168	0	1754	5016	0	1801	5718	0	1878	6186	0	1929	7533	0	2159	8897	0	2188	9706	0	2247	11202	0	2358
	18	3124	0	1778	4972	0	1825	5664	0	1917	6125	0	1979	7454	0	2214	8853	0	2299	9671	0	2346	11158	0	2470
	20	3080	0	1801	4928	0	1849	5614	0	1948	6072	0	2015	7392	0	2252	8800	0	2370	9460	0	2453	11088	0	2583
	22	3036	0	1825	4884	0	1872	5544	0	1989	5984	0	2067	7313	0	2306	8747	0	2465	9566	0	2543	11035	0	2690
	24	2992	0	1849	4840	0	1896	5495	0	2028	5931	0	2116	7251	0	2361	8694	0	2560	9513	0	2640	10877	0	2799
1.8+1.8+5	16	3636	0	2020	5757	0	2075	6563	0	2163	7100	0	2222	8646	0	2487	10211	0	2520	11140	0	2588	12857	0	2716
	18	3586	0	2048	5707	0	2102	6500	0	2209	7030	0	2280	8555	0	2550	10161	0	2648	11100	0	2703	12807	0	2845
	20	3535	0	2075	5656	0	2129	6444	0	2244	6969	0	2321	8484	0	2594	10100	0	2730	10858	0	2826	12726	0	2976
	22	3485	0	2102	5606	0	2157	6363	0	2291	6868	0	2381	8393	0	2656	10039	0	2839	10979	0	2929	12665	0	3099
	24	3434	0	2129	5555	0	2184	6306	0	2336	6807	0	2438	8322	0	2719	9979	0	2948	10918	0	3041	12484	0	3224
1.8+1.8+6	16	3744	0	2264	5928	0	2326	6758	0	2425	7311	0	2491	8902	0	2788	10514	0	2824	11471	0	2901	13239	0	3045
	18	3692	0	2295	5876	0	2356	6693	0	2476	7238	0	2555	8809	0	2858	10462	0	2968	11430	0	3029	13187	0	3189
	20	3640	0	2326	5824	0	2387	6635	0	2515	7176	0	2601	8736	0	2907	10400	0	3060	11180	0	3167	13104	0	3335
	22	3588	0	2356	5772	0	2417	6552	0	2568	7072	0	2668	8642	0	2977	10338	0	3182	11305	0	3283	13042	0	3473
	24	3536	0	2387	5720	0	2448	6494	0	2619	7010	0	2733	8570	0	3048	10275	0	3305	11242	0	3409	12854	0	3614
1.8+2.5+2.5	16	3096	0	1754	4902	0	1801	5588	0	1878	6046	0	1929	7362	0	2159	8695	0	2188	9486	0	2247	10948	0	2358
	18	3053	0	1778	4859	0	1825	5535	0	1917	5986	0	1979	7284	0	2214	8652	0	2299	9451	0	2346	10905	0	2470
	20	3010	0	1801	4816	0	1849	5487	0	1948	5934	0	2015	7224	0	2252	8600	0	2370	9245	0	2453	10836	0	2583
	22	2967	0	1825	4773	0	1872	5418	0	1989	5848	0	2067	7147	0	2306	8548	0	2465	9348	0	2543	10784	0	2690
	24	2924	0	1849	4730	0	1896	5370	0	2028	5796	0	2116	7086	0	2361	8497	0	2560	9297	0	2640	10630	0	2799
1.8+2.5+3.5	16	3384	0	1872	5358	0	1923	6108	0	2005	6608	0	2059	8046	0	2305	9503	0	2335	10368	0	2398	11966	0	2517
	18	3337	0	1898	5311	0	1948	6050	0	2047	6542	0	2113	7962	0	2363	9456	0	2454	10331	0	2505	11919	0	2636
	20	3290	0	1923	5264	0	1973	5997	0	2080	6486	0	2151	7896	0	2404	9400	0	2530	10105	0	2619	11844	0	2758
	22	3243	0	1948	5217	0	1999	5922	0	2123	6392	0	2206	7811	0	2462	9344	0	2631	10218	0	2715	11788	0	2872
	24	3196	0	1973	5170	0	2024	5869	0	2165	6336	0	2259	7746	0	2520	9287	0	2732	10161	0	2818	11618	0	2988

EWB : Evaporator Wet Bulb temperature (°C)
EDB : Evaporator Dry Bulb temperature (°C)
(°CDB) : Outdoor Unit Inlet Air Dry Temperature (°C)

TC : Total Capacity (W)
SHC : Sensible Heating Capacity (W)
PI : Power Input

	INDOOR	OUTDOOR TEMPERATURE (°CDB)																							
	EDB	-15			-10			-7			-5			0			7			10			15		
	°C	TC	SHC	PI	TC	SHC	PI	TC	SHC	PI	TC	SHC	PI	TC	SHC	PI	TC	SHC	PI	TC	SHC	PI	TC	SHC	PI
1.8+2.5+5	16	3744	0	2139	5928	0	2196	6758	0	2290	7311	0	2352	8902	0	2633	10514	0	2667	11471	0	2740	13239	0	2876
	18	3692	0	2168	5876	0	2225	6693	0	2338	7238	0	2413	8809	0	2699	10462	0	2803	11430	0	2861	13187	0	3011
	20	3640	0	2196	5824	0	2254	6635	0	2376	7176	0	2457	8736	0	2746	10400	0	2890	11180	0	2991	13104	0	3150
	22	3588	0	2225	5772	0	2283	6552	0	2425	7072	0	2520	8642	0	2812	10338	0	3006	11305	0	3101	13042	0	3280
	24	3536	0	2254	5720	0	2312	6494	0	2473	7010	0	2581	8570	0	2878	10275	0	3121	11242	0	3219	12854	0	3413
1.8+2.5+6	16	3744	0	2213	5928	0	2272	6758	0	2369	7311	0	2434	8902	0	2724	10514	0	2760	11471	0	2835	13239	0	2975
	18	3692	0	2243	5876	0	2302	6693	0	2419	7238	0	2497	8809	0	2793	10462	0	2900	11430	0	2960	13187	0	3116
	20	3640	0	2272	5824	0	2332	6635	0	2458	7176	0	2542	8736	0	2841	10400	0	2990	11180	0	3095	13104	0	3259
	22	3588	0	2302	5772	0	2362	6552	0	2509	7072	0	2607	8642	0	2909	10338	0	3110	11305	0	3208	13042	0	3394
	24	3536	0	2332	5720	0	2392	6494	0	2559	7010	0	2670	8570	0	2978	10275	0	3229	11242	0	3331	12854	0	3531
1.8+3.5+3.5	16	3744	0	2035	5928	0	2090	6758	0	2179	7311	0	2239	8902	0	2505	10514	0	2538	11471	0	2607	13239	0	2736
	18	3692	0	2063	5876	0	2118	6693	0	2225	7238	0	2296	8809	0	2569	10462	0	2668	11430	0	2723	13187	0	2866
	20	3640	0	2090	5824	0	2145	6635	0	2261	7176	0	2338	8736	0	2613	10400	0	2750	11180	0	2846	13104	0	2998
	22	3588	0	2118	5772	0	2173	6552	0	2308	7072	0	2398	8642	0	2676	10338	0	2860	11305	0	2951	13042	0	3121
	24	3536	0	2145	5720	0	2200	6494	0	2353	7010	0	2456	8570	0	2739	10275	0	2970	11242	0	3064	12854	0	3248
1.8+3.5+5	16	3744	0	2213	5928	0	2272	6758	0	2369	7311	0	2434	8902	0	2724	10514	0	2760	11471	0	2835	13239	0	2975
	18	3692	0	2243	5876	0	2302	6693	0	2419	7238	0	2497	8809	0	2793	10462	0	2900	11430	0	2960	13187	0	3116
	20	3640	0	2272	5824	0	2332	6635	0	2458	7176	0	2542	8736	0	2841	10400	0	2990	11180	0	3095	13104	0	3259
	22	3588	0	2302	5772	0	2362	6552	0	2509	7072	0	2607	8642	0	2909	10338	0	3110	11305	0	3208	13042	0	3394
	24	3536	0	2332	5720	0	2392	6494	0	2559	7010	0	2670	8570	0	2978	10275	0	3229	11242	0	3331	12854	0	3531
1.8+3.5+6	16	3744	0	2213	5928	0	2272	6758	0	2369	7311	0	2434	8902	0	2724	10514	0	2760	11471	0	2835	13239	0	2975
	18	3692	0	2243	5876	0	2302	6693	0	2419	7238	0	2497	8809	0	2793	10462	0	2900	11430	0	2960	13187	0	3116
	20	3640	0	2272	5824	0	2332	6635	0	2458	7176	0	2542	8736	0	2841	10400	0	2990	11180	0	3095	13104	0	3259
	22	3588	0	2302	5772	0	2362	6552	0	2509	7072	0	2607	8642	0	2909	10338	0	3110	11305	0	3208	13042	0	3394
	24	3536	0	2332	5720	0	2392	6494	0	2559	7010	0	2670	8570	0	2978	10275	0	3229	11242	0	3331	12854	0	3531
1.8+5+5	16	3744	0	2213	5928	0	2272	6758	0	2369	7311	0	2434	8902	0	2724	10514	0	2760	11471	0	2835	13239	0	2975
	18	3692	0	2243	5876	0	2302	6693	0	2419	7238	0	2497	8809	0	2793	10462	0	2900	11430	0	2960	13187	0	3116
	20	3640	0	2272	5824	0	2332	6635	0	2458	7176	0	2542	8736	0	2841	10400	0	2990	11180	0	3095	13104	0	3259
	22	3588	0	2302	5772	0	2362	6552	0	2509	7072	0	2607	8642	0	2909	10338	0	3110	11305	0	3208	13042	0	3394
	24	3536	0	2332	5720	0	2392	6494	0	2559	7010	0	2670	8570	0	2978	10275	0	3229	11242	0	3331	12854	0	3531
1.8+5+6	16	3780	0	2213	5985	0	2272	6823	0	2369	7382	0	2434	8988	0	2724	10616	0	2760	11582	0	2835	13367	0	2975
	18	3728	0	2243	5933	0	2302	6758	0	2419	7308	0	2497	8894	0	2793	10563	0	2900	11540	0	2960	13314	0	3116
	20	3675	0	2272	5880	0	2332	6699	0	2458	7245	0	2542	8820	0	2841	10500	0	2990	11288	0	3095	13230	0	3259
	22	3623	0	2302	5828	0	2362	6615	0	2509	7140	0	2607	8726	0	2909	10437	0	3110	11414	0	3208	13167	0	3394
	24	3570	0	2332	5775	0	2392	6556	0	2559	7077	0	2670	8652	0	2978	10374	0	3229	11351	0	3331	12978	0	3531
1.8+6+6	16	3960	0	2250	6270	0	2310	7148	0	2409	7733	0	2475	9416	0	2769	11121	0	2806	12133	0	2882	14003	0	3025
	18	3905	0	2280	6215	0	2341	7080	0	2459	7656	0	2538	9317	0	2839	11066	0	2949	12089	0	3010	13948	0	3168
	20	3850	0	2310	6160	0	2371	7018	0	2499	7590	0	2584	9240	0	2888	11000	0	3040	11825	0	3146	13860	0	3314
	22	3795	0	2341	6105	0	2402	6930	0	2551	7480	0	2651	9141	0	2958	10934	0	3162	11957	0	3262	13794	0	3450
	24	3740	0	2371	6050	0	2432	6868	0	2602	7414	0	2715	9064	0	3028	10868	0	3283	11891	0	3387	13596	0	3590

EWB : Evaporator Wet Bulb temperature (°C)
EDB : Evaporator Dry Bulb temperature (°C)
(°CDB) : Outdoor Unit Inlet Air Dry Temperature (°C)

TC : Total Capacity (W)
SHC : Sensible Heating Capacity (W)
PI : Power Input

	INDOOR	OUTDOOR TEMPERATURE (°CDB)																							
	EDB	-15			-10			-7			-5			0			7			10			15		
	°C	TC	SHC	PI	TC	SHC	PI	TC	SHC	PI	TC	SHC	PI	TC	SHC	PI	TC	SHC	PI	TC	SHC	PI	TC	SHC	PI
2.5+2.5+2.5	16	3240	0	1880	5130	0	1930	5848	0	2013	6327	0	2068	7704	0	2314	9099	0	2344	9927	0	2408	11457	0	2527
	18	3195	0	1905	5085	0	1956	5792	0	2055	6264	0	2121	7623	0	2372	9054	0	2464	9891	0	2515	11412	0	2647
	20	3150	0	1930	5040	0	1981	5742	0	2088	6210	0	2159	7560	0	2413	9000	0	2540	9675	0	2629	11340	0	2769
	22	3105	0	1956	4995	0	2007	5670	0	2132	6120	0	2215	7479	0	2471	8946	0	2642	9783	0	2725	11286	0	2883
	24	3060	0	1981	4950	0	2032	5620	0	2174	6066	0	2268	7416	0	2530	8892	0	2743	9729	0	2830	11124	0	3000
2.5+2.5+3.5	16	3600	0	2020	5700	0	2075	6498	0	2163	7030	0	2222	8560	0	2487	10110	0	2520	11030	0	2588	12730	0	2716
	18	3550	0	2048	5650	0	2102	6436	0	2209	6960	0	2280	8470	0	2550	10060	0	2648	10990	0	2703	12680	0	2845
	20	3500	0	2075	5600	0	2129	6380	0	2244	6900	0	2321	8400	0	2594	10000	0	2730	10750	0	2826	12600	0	2976
	22	3450	0	2102	5550	0	2157	6300	0	2291	6800	0	2381	8310	0	2656	9940	0	2839	10870	0	2929	12540	0	3099
	24	3400	0	2129	5500	0	2184	6244	0	2336	6740	0	2438	8240	0	2719	9880	0	2948	10810	0	3041	12360	0	3224
2.5+2.5+5	16	3744	0	2213	5928	0	2272	6758	0	2369	7311	0	2434	8902	0	2724	10514	0	2760	11471	0	2835	13239	0	2975
	18	3692	0	2243	5876	0	2302	6693	0	2419	7238	0	2497	8809	0	2793	10462	0	2900	11430	0	2960	13187	0	3116
	20	3640	0	2272	5824	0	2332	6635	0	2458	7176	0	2542	8736	0	2841	10400	0	2990	11180	0	3095	13104	0	3259
	22	3588	0	2302	5772	0	2362	6552	0	2509	7072	0	2607	8642	0	2909	10338	0	3110	11305	0	3208	13042	0	3394
	24	3536	0	2332	5720	0	2392	6494	0	2559	7010	0	2670	8570	0	2978	10275	0	3229	11242	0	3331	12854	0	3531
2.5+2.5+6	16	3744	0	2213	5928	0	2272	6758	0	2369	7311	0	2434	8902	0	2724	10514	0	2760	11471	0	2835	13239	0	2975
	18	3692	0	2243	5876	0	2302	6693	0	2419	7238	0	2497	8809	0	2793	10462	0	2900	11430	0	2960	13187	0	3116
	20	3640	0	2272	5824	0	2332	6635	0	2458	7176	0	2542	8736	0	2841	10400	0	2990	11180	0	3095	13104	0	3259
	22	3588	0	2302	5772	0	2362	6552	0	2509	7072	0	2607	8642	0	2909	10338	0	3110	11305	0	3208	13042	0	3394
	24	3536	0	2332	5720	0	2392	6494	0	2559	7010	0	2670	8570	0	2978	10275	0	3229	11242	0	3331	12854	0	3531
2.5+3.5+3.5	16	3744	0	2139	5928	0	2196	6758	0	2290	7311	0	2352	8902	0	2633	10514	0	2667	11471	0	2740	13239	0	2876
	18	3692	0	2168	5876	0	2225	6693	0	2338	7238	0	2413	8809	0	2699	10462	0	2803	11430	0	2861	13187	0	3011
	20	3640	0	2196	5824	0	2254	6635	0	2376	7176	0	2457	8736	0	2746	10400	0	2890	11180	0	2991	13104	0	3150
	22	3588	0	2225	5772	0	2283	6552	0	2425	7072	0	2520	8642	0	2812	10338	0	3006	11305	0	3101	13042	0	3280
	24	3536	0	2254	5720	0	2312	6494	0	2473	7010	0	2581	8570	0	2878	10275	0	3121	11242	0	3219	12854	0	3413
2.5+3.5+5	16	3744	0	2213	5928	0	2272	6758	0	2369	7311	0	2434	8902	0	2724	10514	0	2760	11471	0	2835	13239	0	2975
	18	3692	0	2243	5876	0	2302	6693	0	2419	7238	0	2497	8809	0	2793	10462	0	2900	11430	0	2960	13187	0	3116
	20	3640	0	2272	5824	0	2332	6635	0	2458	7176	0	2542	8736	0	2841	10400	0	2990	11180	0	3095	13104	0	3259
	22	3588	0	2302	5772	0	2362	6552	0	2509	7072	0	2607	8642	0	2909	10338	0	3110	11305	0	3208	13042	0	3394
	24	3536	0	2332	5720	0	2392	6494	0	2559	7010	0	2670	8570	0	2978	10275	0	3229	11242	0	3331	12854	0	3531
2.5+3.5+6	16	3780	0	2213	5985	0	2272	6823	0	2369	7382	0	2434	8988	0	2724	10616	0	2760	11582	0	2835	13367	0	2975
	18	3728	0	2243	5933	0	2302	6758	0	2419	7308	0	2497	8894	0	2793	10563	0	2900	11540	0	2960	13314	0	3116
	20	3675	0	2272	5880	0	2332	6699	0	2458	7245	0	2542	8820	0	2841	10500	0	2990	11288	0	3095	13230	0	3259
	22	3623	0	2302	5828	0	2362	6615	0	2509	7140	0	2607	8726	0	2909	10437	0	3110	11414	0	3208	13167	0	3394
	24	3570	0	2332	5775	0	2392	6556	0	2559	7077	0	2670	8652	0	2978	10374	0	3229	11351	0	3331	12978	0	3531
2.5+5+5	16	3780	0	2213	5985	0	2272	6823	0	2369	7382	0	2434	8988	0	2724	10616	0	2760	11582	0	2835	13367	0	2975
	18	3728	0	2243	5933	0	2302	6758	0	2419	7308	0	2497	8894	0	2793	10563	0	2900	11540	0	2960	13314	0	3116
	20	3675	0	2272	5880	0	2332	6699	0	2458	7245	0	2542	8820	0	2841	10500	0	2990	11288	0	3095	13230	0	3259
	22	3623	0	2302	5828	0	2362	6615	0	2509	7140	0	2607	8726	0	2909	10437	0	3110	11414	0	3208	13167	0	3394
	24	3570	0	2332	5775	0	2392	6556	0	2559	7077	0	2670	8652	0	2978	10374	0	3229	11351	0	3331	12978	0	3531

EWB : Evaporator Wet Bulb temperature (°C)

EDB : Evaporator Dry Bulb temperature (°C)

(°CDB) : Outdoor Unit Inlet Air Dry Temperature (°C)

TC : Total Capacity (W)

SHC : Sensible Heating Capacity (W)

PI : Power Input

	INDOOR	OUTDOOR TEMPERATURE (°CDB)																							
	EDB	-15			-10			-7			-5			0			7			10			15		
	°C	TC	SHC	PI	TC	SHC	PI	TC	SHC	PI	TC	SHC	PI	TC	SHC	PI	TC	SHC	PI	TC	SHC	PI	TC	SHC	PI
2.5+5+6	16	3780	0	2213	5985	0	2272	6823	0	2369	7382	0	2434	8988	0	2724	10616	0	2760	11582	0	2835	13367	0	2975
	18	3728	0	2243	5933	0	2302	6758	0	2419	7308	0	2497	8894	0	2793	10563	0	2900	11540	0	2960	13314	0	3116
	20	3675	0	2272	5880	0	2332	6699	0	2458	7245	0	2542	8820	0	2841	10500	0	2990	11288	0	3095	13230	0	3259
	22	3623	0	2302	5828	0	2362	6615	0	2509	7140	0	2607	8726	0	2909	10437	0	3110	11414	0	3208	13167	0	3394
	24	3570	0	2332	5775	0	2392	6556	0	2559	7077	0	2670	8652	0	2978	10374	0	3229	11351	0	3331	12978	0	3531
2.5+6+6	16	3960	0	2139	6270	0	2196	7148	0	2290	7733	0	2352	9416	0	2633	11121	0	2667	12133	0	2740	14003	0	2876
	18	3905	0	2168	6215	0	2225	7080	0	2338	7656	0	2413	9317	0	2699	11066	0	2803	12089	0	2861	13948	0	3011
	20	3850	0	2196	6160	0	2254	7018	0	2376	7590	0	2457	9240	0	2746	11000	0	2890	11825	0	2991	13860	0	3150
	22	3795	0	2225	6105	0	2283	6930	0	2425	7480	0	2520	9141	0	2812	10934	0	3006	11957	0	3101	13794	0	3280
	24	3740	0	2254	6050	0	2312	6868	0	2473	7414	0	2581	9064	0	2878	10868	0	3121	11891	0	3219	13596	0	3413
3.5+3.5+3.5	16	3744	0	2213	5928	0	2272	6758	0	2369	7311	0	2434	8902	0	2724	10514	0	2760	11471	0	2835	13239	0	2975
	18	3692	0	2243	5876	0	2302	6693	0	2419	7238	0	2497	8809	0	2793	10462	0	2900	11430	0	2960	13187	0	3116
	20	3640	0	2272	5824	0	2332	6635	0	2458	7176	0	2542	8736	0	2841	10400	0	2990	11180	0	3095	13104	0	3259
	22	3588	0	2302	5772	0	2362	6552	0	2509	7072	0	2607	8642	0	2909	10338	0	3110	11305	0	3208	13042	0	3394
	24	3536	0	2332	5720	0	2392	6494	0	2559	7010	0	2670	8570	0	2978	10275	0	3229	11242	0	3331	12854	0	3531
3.5+3.5+5	16	3780	0	2213	5985	0	2272	6823	0	2369	7382	0	2434	8988	0	2724	10616	0	2760	11582	0	2835	13367	0	2975
	18	3728	0	2243	5933	0	2302	6758	0	2419	7308	0	2497	8894	0	2793	10563	0	2900	11540	0	2960	13314	0	3116
	20	3675	0	2272	5880	0	2332	6699	0	2458	7245	0	2542	8820	0	2841	10500	0	2990	11288	0	3095	13230	0	3259
	22	3623	0	2302	5828	0	2362	6615	0	2509	7140	0	2607	8726	0	2909	10437	0	3110	11414	0	3208	13167	0	3394
	24	3570	0	2332	5775	0	2392	6556	0	2559	7077	0	2670	8652	0	2978	10374	0	3229	11351	0	3331	12978	0	3531
3.5+3.5+6	16	3780	0	2213	5985	0	2272	6823	0	2369	7382	0	2434	8988	0	2724	10616	0	2760	11582	0	2835	13367	0	2975
	18	3728	0	2243	5933	0	2302	6758	0	2419	7308	0	2497	8894	0	2793	10563	0	2900	11540	0	2960	13314	0	3116
	20	3675	0	2272	5880	0	2332	6699	0	2458	7245	0	2542	8820	0	2841	10500	0	2990	11288	0	3095	13230	0	3259
	22	3623	0	2302	5828	0	2362	6615	0	2509	7140	0	2607	8726	0	2909	10437	0	3110	11414	0	3208	13167	0	3394
	24	3570	0	2332	5775	0	2392	6556	0	2559	7077	0	2670	8652	0	2978	10374	0	3229	11351	0	3331	12978	0	3531
3.5+5+5	16	3780	0	2213	5985	0	2272	6823	0	2369	7382	0	2434	8988	0	2724	10616	0	2760	11582	0	2835	13367	0	2975
	18	3728	0	2243	5933	0	2302	6758	0	2419	7308	0	2497	8894	0	2793	10563	0	2900	11540	0	2960	13314	0	3116
	20	3675	0	2272	5880	0	2332	6699	0	2458	7245	0	2542	8820	0	2841	10500	0	2990	11288	0	3095	13230	0	3259
	22	3623	0	2302	5828	0	2362	6615	0	2509	7140	0	2607	8726	0	2909	10437	0	3110	11414	0	3208	13167	0	3394
	24	3570	0	2332	5775	0	2392	6556	0	2559	7077	0	2670	8652	0	2978	10374	0	3229	11351	0	3331	12978	0	3531
3.5+5+6	16	3960	0	2139	6270	0	2196	7148	0	2290	7733	0	2352	9416	0	2633	11121	0	2667	12133	0	2740	14003	0	2876
	18	3905	0	2168	6215	0	2225	7080	0	2338	7656	0	2413	9317	0	2699	11066	0	2803	12089	0	2861	13948	0	3011
	20	3850	0	2196	6160	0	2254	7018	0	2376	7590	0	2457	9240	0	2746	11000	0	2890	11825	0	2991	13860	0	3150
	22	3795	0	2225	6105	0	2283	6930	0	2425	7480	0	2520	9141	0	2812	10934	0	3006	11957	0	3101	13794	0	3280
	24	3740	0	2254	6050	0	2312	6868	0	2473	7414	0	2581	9064	0	2878	10868	0	3121	11891	0	3219	13596	0	3413
3.5+6+6	16	3960	0	2139	6270	0	2196	7148	0	2290	7733	0	2352	9416	0	2633	11121	0	2667	12133	0	2740	14003	0	2876
	18	3905	0	2168	6215	0	2225	7080	0	2338	7656	0	2413	9317	0	2699	11066	0	2803	12089	0	2861	13948	0	3011
	20	3850	0	2196	6160	0	2254	7018	0	2376	7590	0	2457	9240	0	2746	11000	0	2890	11825	0	2991	13860	0	3150
	22	3795	0	2225	6105	0	2283	6930	0	2425	7480	0	2520	9141	0	2812	10934	0	3006	11957	0	3101	13794	0	3280
	24	3740	0	2254	6050	0	2312	6868	0	2473	7414	0	2581	9064	0	2878	10868	0	3121	11891	0	3219	13596	0	3413

EWB : Evaporator Wet Bulb temperature (°C)
EDB : Evaporator Dry Bulb temperature (°C)
(°CDB) : Outdoor Unit Inlet Air Dry Temperature (°C)

TC : Total Capacity (W)
SHC : Sensible Heating Capacity (W)
PI : Power Input

	INDOOR	OUTDOOR TEMPERATURE (°CDB)																							
	EDB	-15			-10			-7			-5			0			7			10			15		
	°C	TC	SHC	PI	TC	SHC	PI	TC	SHC	PI	TC	SHC	PI	TC	SHC	PI	TC	SHC	PI	TC	SHC	PI	TC	SHC	PI
5+5+5	16	3960	0	2139	6270	0	2196	7148	0	2290	7733	0	2352	9416	0	2633	11121	0	2667	12133	0	2740	14003	0	2876
	18	3905	0	2168	6215	0	2225	7080	0	2338	7656	0	2413	9317	0	2699	11066	0	2803	12089	0	2861	13948	0	3011
	20	3850	0	2196	6160	0	2254	7018	0	2376	7590	0	2457	9240	0	2746	11000	0	2890	11825	0	2991	13860	0	3150
	22	3795	0	2225	6105	0	2283	6930	0	2425	7480	0	2520	9141	0	2812	10934	0	3006	11957	0	3101	13794	0	3280
	24	3740	0	2254	6050	0	2312	6868	0	2473	7414	0	2581	9064	0	2878	10868	0	3121	11891	0	3219	13596	0	3413
1.2+1.2+1.2+1.2	16	2592	0	1480	4104	0	1520	4679	0	1585	5062	0	1628	6163	0	1822	7279	0	1846	7942	0	1896	9166	0	1990
	18	2556	0	1500	4068	0	1540	4634	0	1618	5011	0	1670	6098	0	1868	7243	0	1940	7913	0	1980	9130	0	2084
	20	2520	0	1520	4032	0	1560	4594	0	1644	4968	0	1700	6048	0	1900	7200	0	2000	7740	0	2070	9072	0	2180
	22	2484	0	1540	3996	0	1580	4536	0	1678	4896	0	1744	5983	0	1946	7157	0	2080	7826	0	2146	9029	0	2270
	24	2448	0	1560	3960	0	1600	4496	0	1712	4853	0	1786	5933	0	1992	7114	0	2160	7783	0	2228	8899	0	2362
1.2+1.2+1.2+1.8	16	2844	0	1628	4503	0	1672	5133	0	1743	5554	0	1791	6762	0	2004	7987	0	2031	8714	0	2086	10057	0	2189
	18	2805	0	1650	4464	0	1694	5084	0	1780	5498	0	1837	6691	0	2055	7947	0	2134	8682	0	2178	10017	0	2292
	20	2765	0	1672	4424	0	1716	5040	0	1808	5451	0	1870	6636	0	2090	7900	0	2200	8493	0	2277	9954	0	2398
	22	2726	0	1694	4385	0	1738	4977	0	1846	5372	0	1918	6565	0	2141	7853	0	2288	8587	0	2361	9907	0	2497
	24	2686	0	1716	4345	0	1760	4933	0	1883	5325	0	1965	6510	0	2191	7805	0	2376	8540	0	2451	9764	0	2598
1.2+1.2+1.2+2.5	16	3168	0	1769	5016	0	1816	5718	0	1894	6186	0	1945	7533	0	2177	8897	0	2206	9706	0	2266	11202	0	2378
	18	3124	0	1793	4972	0	1840	5664	0	1934	6125	0	1996	7454	0	2232	8853	0	2318	9671	0	2366	11158	0	2490
	20	3080	0	1816	4928	0	1864	5614	0	1965	6072	0	2032	7392	0	2271	8800	0	2390	9460	0	2474	11088	0	2605
	22	3036	0	1840	4884	0	1888	5544	0	2006	5984	0	2084	7313	0	2325	8747	0	2486	9566	0	2564	11035	0	2713
	24	2992	0	1864	4840	0	1912	5495	0	2045	5931	0	2134	7251	0	2380	8694	0	2581	9513	0	2662	10877	0	2823
1.2+1.2+1.2+3.5	16	3492	0	1887	5529	0	1938	6303	0	2021	6819	0	2076	8303	0	2323	9807	0	2354	10699	0	2417	12348	0	2537
	18	3444	0	1913	5481	0	1964	6243	0	2063	6751	0	2129	8216	0	2382	9758	0	2474	10660	0	2525	12300	0	2657
	20	3395	0	1938	5432	0	1989	6189	0	2096	6693	0	2168	8148	0	2423	9700	0	2550	10428	0	2639	12222	0	2780
	22	3347	0	1964	5384	0	2015	6111	0	2140	6596	0	2224	8061	0	2481	9642	0	2652	10544	0	2736	12164	0	2894
	24	3298	0	1989	5335	0	2040	6057	0	2182	6538	0	2277	7993	0	2540	9584	0	2754	10486	0	2841	11989	0	3012
1.2+1.2+1.2+5	16	3960	0	2139	6270	0	2196	7148	0	2290	7733	0	2352	9416	0	2633	11121	0	2667	12133	0	2740	14003	0	2876
	18	3905	0	2168	6215	0	2225	7080	0	2338	7656	0	2413	9317	0	2699	11066	0	2803	12089	0	2861	13948	0	3011
	20	3850	0	2196	6160	0	2254	7018	0	2376	7590	0	2457	9240	0	2746	11000	0	2890	11825	0	2991	13860	0	3150
	22	3795	0	2225	6105	0	2283	6930	0	2425	7480	0	2520	9141	0	2812	10934	0	3006	11957	0	3101	13794	0	3280
	24	3740	0	2254	6050	0	2312	6868	0	2473	7414	0	2581	9064	0	2878	10868	0	3121	11891	0	3219	13596	0	3413
1.2+1.2+1.2+6	16	3960	0	2139	6270	0	2196	7148	0	2290	7733	0	2352	9416	0	2633	11121	0	2667	12133	0	2740	14003	0	2876
	18	3905	0	2168	6215	0	2225	7080	0	2338	7656	0	2413	9317	0	2699	11066	0	2803	12089	0	2861	13948	0	3011
	20	3850	0	2196	6160	0	2254	7018	0	2376	7590	0	2457	9240	0	2746	11000	0	2890	11825	0	2991	13860	0	3150
	22	3795	0	2225	6105	0	2283	6930	0	2425	7480	0	2520	9141	0	2812	10934	0	3006	11957	0	3101	13794	0	3280
	24	3740	0	2254	6050	0	2312	6868	0	2473	7414	0	2581	9064	0	2878	10868	0	3121	11891	0	3219	13596	0	3413
1.2+1.2+1.8+1.8	16	3096	0	1761	4902	0	1809	5588	0	1886	6046	0	1937	7362	0	2168	8695	0	2197	9486	0	2256	10948	0	2368
	18	3053	0	1785	4859	0	1833	5535	0	1925	5986	0	1987	7284	0	2223	8652	0	2309	9451	0	2356	10905	0	2480
	20	3010	0	1809	4816	0	1856	5487	0	1956	5934	0	2023	7224	0	2261	8600	0	2380	9245	0	2463	10836	0	2594
	22	2967	0	1833	4773	0	1880	5418	0	1997	5848	0	2075	7147	0	2316	8548	0	2475	9348	0	2554	10784	0	2701
	24	2924	0	1856	4730	0	1904	5370	0	2037	5796	0	2125	7086	0	2370	8497	0	2570	9297	0	2651	10630	0	2811

EWB : Evaporator Wet Bulb temperature (°C)

EDB : Evaporator Dry Bulb temperature (°C)

(°CDB) : Outdoor Unit Inlet Air Dry Temperature (°C)

TC : Total Capacity (W)

SHC : Sensible Heating Capacity (W)

PI : Power Input

	INDOOR	OUTDOOR TEMPERATURE (°CDB)																							
	EDB	-15			-10			-7			-5			0			7			10			15		
	°C	TC	SHC	PI	TC	SHC	PI	TC	SHC	PI	TC	SHC	PI	TC	SHC	PI	TC	SHC	PI	TC	SHC	PI	TC	SHC	PI
1.2+1.2+1.8+2.5	16	3420	0	1872	5415	0	1923	6173	0	2005	6679	0	2059	8132	0	2305	9605	0	2335	10479	0	2398	12094	0	2517
	18	3373	0	1898	5368	0	1948	6114	0	2047	6612	0	2113	8047	0	2363	9557	0	2454	10441	0	2505	12046	0	2636
	20	3325	0	1923	5320	0	1973	6061	0	2080	6555	0	2151	7980	0	2404	9500	0	2530	10213	0	2619	11970	0	2758
	22	3278	0	1948	5273	0	1999	5985	0	2123	6460	0	2206	7895	0	2462	9443	0	2631	10327	0	2715	11913	0	2872
	24	3230	0	1973	5225	0	2024	5932	0	2165	6403	0	2259	7828	0	2520	9386	0	2732	10270	0	2818	11742	0	2988
1.2+1.2+1.8+3.5	16	3744	0	1835	5928	0	1885	6758	0	1965	7311	0	2019	8902	0	2259	10514	0	2289	11471	0	2351	13239	0	2468
	18	3692	0	1860	5876	0	1910	6693	0	2006	7238	0	2071	8809	0	2316	10462	0	2406	11430	0	2455	13187	0	2584
	20	3640	0	1885	5824	0	1934	6635	0	2039	7176	0	2108	8736	0	2356	10400	0	2480	11180	0	2567	13104	0	2703
	22	3588	0	1910	5772	0	1959	6552	0	2081	7072	0	2163	8642	0	2413	10338	0	2579	11305	0	2661	13042	0	2815
	24	3536	0	1934	5720	0	1984	6494	0	2122	7010	0	2215	8570	0	2470	10275	0	2678	11242	0	2763	12854	0	2929
1.2+1.2+1.8+5	16	3960	0	2139	6270	0	2196	7148	0	2290	7733	0	2352	9416	0	2633	11121	0	2667	12133	0	2740	14003	0	2876
	18	3905	0	2168	6215	0	2225	7080	0	2338	7656	0	2413	9317	0	2699	11066	0	2803	12089	0	2861	13948	0	3011
	20	3850	0	2196	6160	0	2254	7018	0	2376	7590	0	2457	9240	0	2746	11000	0	2890	11825	0	2991	13860	0	3150
	22	3795	0	2225	6105	0	2283	6930	0	2425	7480	0	2520	9141	0	2812	10934	0	3006	11957	0	3101	13794	0	3280
	24	3740	0	2254	6050	0	2312	6868	0	2473	7414	0	2581	9064	0	2878	10868	0	3121	11891	0	3219	13596	0	3413
1.2+1.2+1.8+6	16	3960	0	2139	6270	0	2196	7148	0	2290	7733	0	2352	9416	0	2633	11121	0	2667	12133	0	2740	14003	0	2876
	18	3905	0	2168	6215	0	2225	7080	0	2338	7656	0	2413	9317	0	2699	11066	0	2803	12089	0	2861	13948	0	3011
	20	3850	0	2196	6160	0	2254	7018	0	2376	7590	0	2457	9240	0	2746	11000	0	2890	11825	0	2991	13860	0	3150
	22	3795	0	2225	6105	0	2283	6930	0	2425	7480	0	2520	9141	0	2812	10934	0	3006	11957	0	3101	13794	0	3280
	24	3740	0	2254	6050	0	2312	6868	0	2473	7414	0	2581	9064	0	2878	10868	0	3121	11891	0	3219	13596	0	3413
1.2+1.2+2.5+2.5	16	3744	0	1835	5928	0	1885	6758	0	1965	7311	0	2019	8902	0	2259	10514	0	2289	11471	0	2351	13239	0	2468
	18	3692	0	1860	5876	0	1910	6693	0	2006	7238	0	2071	8809	0	2316	10462	0	2406	11430	0	2455	13187	0	2584
	20	3640	0	1885	5824	0	1934	6635	0	2039	7176	0	2108	8736	0	2356	10400	0	2480	11180	0	2567	13104	0	2703
	22	3588	0	1910	5772	0	1959	6552	0	2081	7072	0	2163	8642	0	2413	10338	0	2579	11305	0	2661	13042	0	2815
	24	3536	0	1934	5720	0	1984	6494	0	2122	7010	0	2215	8570	0	2470	10275	0	2678	11242	0	2763	12854	0	2929
1.2+1.2+2.5+3.5	16	3960	0	2139	6270	0	2196	7148	0	2290	7733	0	2352	9416	0	2633	11121	0	2667	12133	0	2740	14003	0	2876
	18	3905	0	2168	6215	0	2225	7080	0	2338	7656	0	2413	9317	0	2699	11066	0	2803	12089	0	2861	13948	0	3011
	20	3850	0	2196	6160	0	2254	7018	0	2376	7590	0	2457	9240	0	2746	11000	0	2890	11825	0	2991	13860	0	3150
	22	3795	0	2225	6105	0	2283	6930	0	2425	7480	0	2520	9141	0	2812	10934	0	3006	11957	0	3101	13794	0	3280
	24	3740	0	2254	6050	0	2312	6868	0	2473	7414	0	2581	9064	0	2878	10868	0	3121	11891	0	3219	13596	0	3413
1.2+1.2+2.5+5	16	3960	0	2139	6270	0	2196	7148	0	2290	7733	0	2352	9416	0	2633	11121	0	2667	12133	0	2740	14003	0	2876
	18	3905	0	2168	6215	0	2225	7080	0	2338	7656	0	2413	9317	0	2699	11066	0	2803	12089	0	2861	13948	0	3011
	20	3850	0	2196	6160	0	2254	7018	0	2376	7590	0	2457	9240	0	2746	11000	0	2890	11825	0	2991	13860	0	3150
	22	3795	0	2225	6105	0	2283	6930	0	2425	7480	0	2520	9141	0	2812	10934	0	3006	11957	0	3101	13794	0	3280
	24	3740	0	2254	6050	0	2312	6868	0	2473	7414	0	2581	9064	0	2878	10868	0	3121	11891	0	3219	13596	0	3413
1.2+1.2+2.5+6	16	3960	0	2139	6270	0	2196	7148	0	2290	7733	0	2352	9416	0	2633	11121	0	2667	12133	0	2740	14003	0	2876
	18	3905	0	2168	6215	0	2225	7080	0	2338	7656	0	2413	9317	0	2699	11066	0	2803	12089	0	2861	13948	0	3011
	20	3850	0	2196	6160	0	2254	7018	0	2376	7590	0	2457	9240	0	2746	11000	0	2890	11825	0	2991	13860	0	3150
	22	3795	0	2225	6105	0	2283	6930	0	2425	7480	0	2520	9141	0	2812	10934	0	3006	11957	0	3101	13794	0	3280
	24	3740	0	2254	6050	0	2312	6868	0	2473	7414	0	2581	9064	0	2878	10868	0	3121	11891	0	3219	13596	0	3413

EWB : Evaporator Wet Bulb temperature (°C)
EDB : Evaporator Dry Bulb temperature (°C)
(°CDB) : Outdoor Unit Inlet Air Dry Temperature (°C)

TC : Total Capacity (W)
SHC : Sensible Heating Capacity (W)
PI : Power Input

	INDOOR	OUTDOOR TEMPERATURE (°CDB)																							
	EDB	-15			-10			-7			-5			0			7			10			15		
	°C	TC	SHC	PI	TC	SHC	PI	TC	SHC	PI	TC	SHC	PI	TC	SHC	PI	TC	SHC	PI	TC	SHC	PI	TC	SHC	PI
1.2+1.2+3.5+3.5	16	3960	0	2139	6270	0	2196	7148	0	2290	7733	0	2352	9416	0	2633	11121	0	2667	12133	0	2740	14003	0	2876
	18	3905	0	2168	6215	0	2225	7080	0	2338	7656	0	2413	9317	0	2699	11066	0	2803	12089	0	2861	13948	0	3011
	20	3850	0	2196	6160	0	2254	7018	0	2376	7590	0	2457	9240	0	2746	11000	0	2890	11825	0	2991	13860	0	3150
	22	3795	0	2225	6105	0	2283	6930	0	2425	7480	0	2520	9141	0	2812	10934	0	3006	11957	0	3101	13794	0	3280
	24	3740	0	2254	6050	0	2312	6868	0	2473	7414	0	2581	9064	0	2878	10868	0	3121	11891	0	3219	13596	0	3413
1.2+1.2+3.5+5	16	3960	0	2139	6270	0	2196	7148	0	2290	7733	0	2352	9416	0	2633	11121	0	2667	12133	0	2740	14003	0	2876
	18	3905	0	2168	6215	0	2225	7080	0	2338	7656	0	2413	9317	0	2699	11066	0	2803	12089	0	2861	13948	0	3011
	20	3850	0	2196	6160	0	2254	7018	0	2376	7590	0	2457	9240	0	2746	11000	0	2890	11825	0	2991	13860	0	3150
	22	3795	0	2225	6105	0	2283	6930	0	2425	7480	0	2520	9141	0	2812	10934	0	3006	11957	0	3101	13794	0	3280
	24	3740	0	2254	6050	0	2312	6868	0	2473	7414	0	2581	9064	0	2878	10868	0	3121	11891	0	3219	13596	0	3413
1.2+1.2+3.5+6	16	3960	0	2139	6270	0	2196	7148	0	2290	7733	0	2352	9416	0	2633	11121	0	2667	12133	0	2740	14003	0	2876
	18	3905	0	2168	6215	0	2225	7080	0	2338	7656	0	2413	9317	0	2699	11066	0	2803	12089	0	2861	13948	0	3011
	20	3850	0	2196	6160	0	2254	7018	0	2376	7590	0	2457	9240	0	2746	11000	0	2890	11825	0	2991	13860	0	3150
	22	3795	0	2225	6105	0	2283	6930	0	2425	7480	0	2520	9141	0	2812	10934	0	3006	11957	0	3101	13794	0	3280
	24	3740	0	2254	6050	0	2312	6868	0	2473	7414	0	2581	9064	0	2878	10868	0	3121	11891	0	3219	13596	0	3413
1.2+1.2+5+5	16	3960	0	2139	6270	0	2196	7148	0	2290	7733	0	2352	9416	0	2633	11121	0	2667	12133	0	2740	14003	0	2876
	18	3905	0	2168	6215	0	2225	7080	0	2338	7656	0	2413	9317	0	2699	11066	0	2803	12089	0	2861	13948	0	3011
	20	3850	0	2196	6160	0	2254	7018	0	2376	7590	0	2457	9240	0	2746	11000	0	2890	11825	0	2991	13860	0	3150
	22	3795	0	2225	6105	0	2283	6930	0	2425	7480	0	2520	9141	0	2812	10934	0	3006	11957	0	3101	13794	0	3280
	24	3740	0	2254	6050	0	2312	6868	0	2473	7414	0	2581	9064	0	2878	10868	0	3121	11891	0	3219	13596	0	3413
1.2+1.8+1.8+1.8	16	3348	0	1865	5301	0	1915	6043	0	1997	6538	0	2051	7961	0	2296	9402	0	2326	10258	0	2389	11839	0	2507
	18	3302	0	1890	5255	0	1940	5985	0	2039	6473	0	2104	7877	0	2354	9356	0	2444	10221	0	2495	11792	0	2626
	20	3255	0	1915	5208	0	1966	5933	0	2071	6417	0	2142	7812	0	2394	9300	0	2520	9998	0	2608	11718	0	2747
	22	3209	0	1940	5162	0	1991	5859	0	2115	6324	0	2197	7728	0	2452	9244	0	2621	10109	0	2704	11662	0	2860
	24	3162	0	1966	5115	0	2016	5807	0	2157	6268	0	2250	7663	0	2510	9188	0	2722	10053	0	2807	11495	0	2976
1.2+1.8+1.8+2.5	16	3672	0	2035	5814	0	2090	6628	0	2179	7171	0	2239	8731	0	2505	10312	0	2538	11251	0	2607	12985	0	2736
	18	3621	0	2063	5763	0	2118	6565	0	2225	7099	0	2296	8639	0	2569	10261	0	2668	11210	0	2723	12934	0	2866
	20	3570	0	2090	5712	0	2145	6508	0	2261	7038	0	2338	8568	0	2613	10200	0	2750	10965	0	2846	12852	0	2998
	22	3519	0	2118	5661	0	2173	6426	0	2308	6936	0	2398	8476	0	2676	10139	0	2860	11087	0	2951	12791	0	3121
	24	3468	0	2145	5610	0	2200	6369	0	2353	6875	0	2456	8405	0	2739	10078	0	2970	11026	0	3064	12607	0	3248
1.2+1.8+1.8+3.5	16	3960	0	2139	6270	0	2196	7148	0	2290	7733	0	2352	9416	0	2633	11121	0	2667	12133	0	2740	14003	0	2876
	18	3905	0	2168	6215	0	2225	7080	0	2338	7656	0	2413	9317	0	2699	11066	0	2803	12089	0	2861	13948	0	3011
	20	3850	0	2196	6160	0	2254	7018	0	2376	7590	0	2457	9240	0	2746	11000	0	2890	11825	0	2991	13860	0	3150
	22	3795	0	2225	6105	0	2283	6930	0	2425	7480	0	2520	9141	0	2812	10934	0	3006	11957	0	3101	13794	0	3280
	24	3740	0	2254	6050	0	2312	6868	0	2473	7414	0	2581	9064	0	2878	10868	0	3121	11891	0	3219	13596	0	3413
1.2+1.8+1.8+5	16	3960	0	2139	6270	0	2196	7148	0	2290	7733	0	2352	9416	0	2633	11121	0	2667	12133	0	2740	14003	0	2876
	18	3905	0	2168	6215	0	2225	7080	0	2338	7656	0	2413	9317	0	2699	11066	0	2803	12089	0	2861	13948	0	3011
	20	3850	0	2196	6160	0	2254	7018	0	2376	7590	0	2457	9240	0	2746	11000	0	2890	11825	0	2991	13860	0	3150
	22	3795	0	2225	6105	0	2283	6930	0	2425	7480	0	2520	9141	0	2812	10934	0	3006	11957	0	3101	13794	0	3280
	24	3740	0	2254	6050	0	2312	6868	0	2473	7414	0	2581	9064	0	2878	10868	0	3121	11891	0	3219	13596	0	3413

EWB : Evaporator Wet Bulb temperature (°C)
EDB : Evaporator Dry Bulb temperature (°C)
(°CDB) : Outdoor Unit Inlet Air Dry Temperature (°C)

TC : Total Capacity (W)
SHC : Sensible Heating Capacity (W)
PI : Power Input

	INDOOR	OUTDOOR TEMPERATURE (°CDB)																							
	EDB	-15			-10			-7			-5			0			7			10			15		
	°C	TC	SHC	PI	TC	SHC	PI	TC	SHC	PI	TC	SHC	PI	TC	SHC	PI	TC	SHC	PI	TC	SHC	PI	TC	SHC	PI
1.2+1.8+1.8+6	16	3960	0	2139	6270	0	2196	7148	0	2290	7733	0	2352	9416	0	2633	11121	0	2667	12133	0	2740	14003	0	2876
	18	3905	0	2168	6215	0	2225	7080	0	2338	7656	0	2413	9317	0	2699	11066	0	2803	12089	0	2861	13948	0	3011
	20	3850	0	2196	6160	0	2254	7018	0	2376	7590	0	2457	9240	0	2746	11000	0	2890	11825	0	2991	13860	0	3150
	22	3795	0	2225	6105	0	2283	6930	0	2425	7480	0	2520	9141	0	2812	10934	0	3006	11957	0	3101	13794	0	3280
	24	3740	0	2254	6050	0	2312	6868	0	2473	7414	0	2581	9064	0	2878	10868	0	3121	11891	0	3219	13596	0	3413
1.2+1.8+2.5+2.5	16	3960	0	2139	6270	0	2196	7148	0	2290	7733	0	2352	9416	0	2633	11121	0	2667	12133	0	2740	14003	0	2876
	18	3905	0	2168	6215	0	2225	7080	0	2338	7656	0	2413	9317	0	2699	11066	0	2803	12089	0	2861	13948	0	3011
	20	3850	0	2196	6160	0	2254	7018	0	2376	7590	0	2457	9240	0	2746	11000	0	2890	11825	0	2991	13860	0	3150
	22	3795	0	2225	6105	0	2283	6930	0	2425	7480	0	2520	9141	0	2812	10934	0	3006	11957	0	3101	13794	0	3280
	24	3740	0	2254	6050	0	2312	6868	0	2473	7414	0	2581	9064	0	2878	10868	0	3121	11891	0	3219	13596	0	3413
1.2+1.8+2.5+3.5	16	3960	0	2139	6270	0	2196	7148	0	2290	7733	0	2352	9416	0	2633	11121	0	2667	12133	0	2740	14003	0	2876
	18	3905	0	2168	6215	0	2225	7080	0	2338	7656	0	2413	9317	0	2699	11066	0	2803	12089	0	2861	13948	0	3011
	20	3850	0	2196	6160	0	2254	7018	0	2376	7590	0	2457	9240	0	2746	11000	0	2890	11825	0	2991	13860	0	3150
	22	3795	0	2225	6105	0	2283	6930	0	2425	7480	0	2520	9141	0	2812	10934	0	3006	11957	0	3101	13794	0	3280
	24	3740	0	2254	6050	0	2312	6868	0	2473	7414	0	2581	9064	0	2878	10868	0	3121	11891	0	3219	13596	0	3413
1.2+1.8+2.5+5	16	3960	0	2139	6270	0	2196	7148	0	2290	7733	0	2352	9416	0	2633	11121	0	2667	12133	0	2740	14003	0	2876
	18	3905	0	2168	6215	0	2225	7080	0	2338	7656	0	2413	9317	0	2699	11066	0	2803	12089	0	2861	13948	0	3011
	20	3850	0	2196	6160	0	2254	7018	0	2376	7590	0	2457	9240	0	2746	11000	0	2890	11825	0	2991	13860	0	3150
	22	3795	0	2225	6105	0	2283	6930	0	2425	7480	0	2520	9141	0	2812	10934	0	3006	11957	0	3101	13794	0	3280
	24	3740	0	2254	6050	0	2312	6868	0	2473	7414	0	2581	9064	0	2878	10868	0	3121	11891	0	3219	13596	0	3413
1.2+1.8+2.5+6	16	3960	0	2139	6270	0	2196	7148	0	2290	7733	0	2352	9416	0	2633	11121	0	2667	12133	0	2740	14003	0	2876
	18	3905	0	2168	6215	0	2225	7080	0	2338	7656	0	2413	9317	0	2699	11066	0	2803	12089	0	2861	13948	0	3011
	20	3850	0	2196	6160	0	2254	7018	0	2376	7590	0	2457	9240	0	2746	11000	0	2890	11825	0	2991	13860	0	3150
	22	3795	0	2225	6105	0	2283	6930	0	2425	7480	0	2520	9141	0	2812	10934	0	3006	11957	0	3101	13794	0	3280
	24	3740	0	2254	6050	0	2312	6868	0	2473	7414	0	2581	9064	0	2878	10868	0	3121	11891	0	3219	13596	0	3413
1.2+1.8+3.5+3.5	16	3960	0	2139	6270	0	2196	7148	0	2290	7733	0	2352	9416	0	2633	11121	0	2667	12133	0	2740	14003	0	2876
	18	3905	0	2168	6215	0	2225	7080	0	2338	7656	0	2413	9317	0	2699	11066	0	2803	12089	0	2861	13948	0	3011
	20	3850	0	2196	6160	0	2254	7018	0	2376	7590	0	2457	9240	0	2746	11000	0	2890	11825	0	2991	13860	0	3150
	22	3795	0	2225	6105	0	2283	6930	0	2425	7480	0	2520	9141	0	2812	10934	0	3006	11957	0	3101	13794	0	3280
	24	3740	0	2254	6050	0	2312	6868	0	2473	7414	0	2581	9064	0	2878	10868	0	3121	11891	0	3219	13596	0	3413
1.2+1.8+3.5+5	16	3960	0	2139	6270	0	2196	7148	0	2290	7733	0	2352	9416	0	2633	11121	0	2667	12133	0	2740	14003	0	2876
	18	3905	0	2168	6215	0	2225	7080	0	2338	7656	0	2413	9317	0	2699	11066	0	2803	12089	0	2861	13948	0	3011
	20	3850	0	2196	6160	0	2254	7018	0	2376	7590	0	2457	9240	0	2746	11000	0	2890	11825	0	2991	13860	0	3150
	22	3795	0	2225	6105	0	2283	6930	0	2425	7480	0	2520	9141	0	2812	10934	0	3006	11957	0	3101	13794	0	3280
	24	3740	0	2254	6050	0	2312	6868	0	2473	7414	0	2581	9064	0	2878	10868	0	3121	11891	0	3219	13596	0	3413
1.2+1.8+3.5+6	16	3960	0	2139	6270	0	2196	7148	0	2290	7733	0	2352	9416	0	2633	11121	0	2667	12133	0	2740	14003	0	2876
	18	3905	0	2168	6215	0	2225	7080	0	2338	7656	0	2413	9317	0	2699	11066	0	2803	12089	0	2861	13948	0	3011
	20	3850	0	2196	6160	0	2254	7018	0	2376	7590	0	2457	9240	0	2746	11000	0	2890	11825	0	2991	13860	0	3150
	22	3795	0	2225	6105	0	2283	6930	0	2425	7480	0	2520	9141	0	2812	10934	0	3006	11957	0	3101	13794	0	3280
	24	3740	0	2254	6050	0	2312	6868	0	2473	7414	0	2581	9064	0	2878	10868	0	3121	11891	0	3219	13596	0	3413

EWB : Evaporator Wet Bulb temperature (°C)
EDB : Evaporator Dry Bulb temperature (°C)
(°CDB) : Outdoor Unit Inlet Air Dry Temperature (°C)

TC : Total Capacity (W)
SHC : Sensible Heating Capacity (W)
PI : Power Input

	INDOOR	OUTDOOR TEMPERATURE (°CDB)																							
	EDB	-15			-10			-7			-5			0			7			10			15		
	°C	TC	SHC	PI	TC	SHC	PI	TC	SHC	PI	TC	SHC	PI	TC	SHC	PI	TC	SHC	PI	TC	SHC	PI	TC	SHC	PI
1.2+1.8+5+5	16	3960	0	2139	6270	0	2196	7148	0	2290	7733	0	2352	9416	0	2633	11121	0	2667	12133	0	2740	14003	0	2876
	18	3905	0	2168	6215	0	2225	7080	0	2338	7656	0	2413	9317	0	2699	11066	0	2803	12089	0	2861	13948	0	3011
	20	3850	0	2196	6160	0	2254	7018	0	2376	7590	0	2457	9240	0	2746	11000	0	2890	11825	0	2991	13860	0	3150
	22	3795	0	2225	6105	0	2283	6930	0	2425	7480	0	2520	9141	0	2812	10934	0	3006	11957	0	3101	13794	0	3280
	24	3740	0	2254	6050	0	2312	6868	0	2473	7414	0	2581	9064	0	2878	10868	0	3121	11891	0	3219	13596	0	3413
1.2+1.8+5+6	16	3960	0	2139	6270	0	2196	7148	0	2290	7733	0	2352	9416	0	2633	11121	0	2667	12133	0	2740	14003	0	2876
	18	3905	0	2168	6215	0	2225	7080	0	2338	7656	0	2413	9317	0	2699	11066	0	2803	12089	0	2861	13948	0	3011
	20	3850	0	2196	6160	0	2254	7018	0	2376	7590	0	2457	9240	0	2746	11000	0	2890	11825	0	2991	13860	0	3150
	22	3795	0	2225	6105	0	2283	6930	0	2425	7480	0	2520	9141	0	2812	10934	0	3006	11957	0	3101	13794	0	3280
	24	3740	0	2254	6050	0	2312	6868	0	2473	7414	0	2581	9064	0	2878	10868	0	3121	11891	0	3219	13596	0	3413
1.2+1.8+6+6	16	3960	0	2139	6270	0	2196	7148	0	2290	7733	0	2352	9416	0	2633	11121	0	2667	12133	0	2740	14003	0	2876
	18	3905	0	2168	6215	0	2225	7080	0	2338	7656	0	2413	9317	0	2699	11066	0	2803	12089	0	2861	13948	0	3011
	20	3850	0	2196	6160	0	2254	7018	0	2376	7590	0	2457	9240	0	2746	11000	0	2890	11825	0	2991	13860	0	3150
	22	3795	0	2225	6105	0	2283	6930	0	2425	7480	0	2520	9141	0	2812	10934	0	3006	11957	0	3101	13794	0	3280
	24	3740	0	2254	6050	0	2312	6868	0	2473	7414	0	2581	9064	0	2878	10868	0	3121	11891	0	3219	13596	0	3413
1.2+2.5+2.5+2.5	16	3960	0	2139	6270	0	2196	7148	0	2290	7733	0	2352	9416	0	2633	11121	0	2667	12133	0	2740	14003	0	2876
	18	3905	0	2168	6215	0	2225	7080	0	2338	7656	0	2413	9317	0	2699	11066	0	2803	12089	0	2861	13948	0	3011
	20	3850	0	2196	6160	0	2254	7018	0	2376	7590	0	2457	9240	0	2746	11000	0	2890	11825	0	2991	13860	0	3150
	22	3795	0	2225	6105	0	2283	6930	0	2425	7480	0	2520	9141	0	2812	10934	0	3006	11957	0	3101	13794	0	3280
	24	3740	0	2254	6050	0	2312	6868	0	2473	7414	0	2581	9064	0	2878	10868	0	3121	11891	0	3219	13596	0	3413
1.2+2.5+2.5+3.5	16	3960	0	2139	6270	0	2196	7148	0	2290	7733	0	2352	9416	0	2633	11121	0	2667	12133	0	2740	14003	0	2876
	18	3905	0	2168	6215	0	2225	7080	0	2338	7656	0	2413	9317	0	2699	11066	0	2803	12089	0	2861	13948	0	3011
	20	3850	0	2196	6160	0	2254	7018	0	2376	7590	0	2457	9240	0	2746	11000	0	2890	11825	0	2991	13860	0	3150
	22	3795	0	2225	6105	0	2283	6930	0	2425	7480	0	2520	9141	0	2812	10934	0	3006	11957	0	3101	13794	0	3280
	24	3740	0	2254	6050	0	2312	6868	0	2473	7414	0	2581	9064	0	2878	10868	0	3121	11891	0	3219	13596	0	3413
1.2+2.5+2.5+5	16	3960	0	2139	6270	0	2196	7148	0	2290	7733	0	2352	9416	0	2633	11121	0	2667	12133	0	2740	14003	0	2876
	18	3905	0	2168	6215	0	2225	7080	0	2338	7656	0	2413	9317	0	2699	11066	0	2803	12089	0	2861	13948	0	3011
	20	3850	0	2196	6160	0	2254	7018	0	2376	7590	0	2457	9240	0	2746	11000	0	2890	11825	0	2991	13860	0	3150
	22	3795	0	2225	6105	0	2283	6930	0	2425	7480	0	2520	9141	0	2812	10934	0	3006	11957	0	3101	13794	0	3280
	24	3740	0	2254	6050	0	2312	6868	0	2473	7414	0	2581	9064	0	2878	10868	0	3121	11891	0	3219	13596	0	3413
1.2+2.5+2.5+6	16	3960	0	2139	6270	0	2196	7148	0	2290	7733	0	2352	9416	0	2633	11121	0	2667	12133	0	2740	14003	0	2876
	18	3905	0	2168	6215	0	2225	7080	0	2338	7656	0	2413	9317	0	2699	11066	0	2803	12089	0	2861	13948	0	3011
	20	3850	0	2196	6160	0	2254	7018	0	2376	7590	0	2457	9240	0	2746	11000	0	2890	11825	0	2991	13860	0	3150
	22	3795	0	2225	6105	0	2283	6930	0	2425	7480	0	2520	9141	0	2812	10934	0	3006	11957	0	3101	13794	0	3280
	24	3740	0	2254	6050	0	2312	6868	0	2473	7414	0	2581	9064	0	2878	10868	0	3121	11891	0	3219	13596	0	3413
1.2+2.5+3.5+3.5	16	3960	0	2139	6270	0	2196	7148	0	2290	7733	0	2352	9416	0	2633	11121	0	2667	12133	0	2740	14003	0	2876
	18	3905	0	2168	6215	0	2225	7080	0	2338	7656	0	2413	9317	0	2699	11066	0	2803	12089	0	2861	13948	0	3011
	20	3850	0	2196	6160	0	2254	7018	0	2376	7590	0	2457	9240	0	2746	11000	0	2890	11825	0	2991	13860	0	3150
	22	3795	0	2225	6105	0	2283	6930	0	2425	7480	0	2520	9141	0	2812	10934	0	3006	11957	0	3101	13794	0	3280
	24	3740	0	2254	6050	0	2312	6868	0	2473	7414	0	2581	9064	0	2878	10868	0	3121	11891	0	3219	13596	0	3413

EWB : Evaporator Wet Bulb temperature (°C)
EDB : Evaporator Dry Bulb temperature (°C)
(°CDB) : Outdoor Unit Inlet Air Dry Temperature (°C)

TC : Total Capacity (W)
SHC : Sensible Heating Capacity (W)
PI : Power Input

	INDOOR	OUTDOOR TEMPERATURE (°CDB)																								
	EDB	-15			-10			-7			-5			0			7			10			15			
	°C	TC	SHC	PI	TC	SHC	PI	TC	SHC	PI	TC	SHC	PI	TC	SHC	PI	TC	SHC	PI	TC	SHC	PI	TC	SHC	PI
1.2+2.5+3.5+5	16	3960	0	2139	6270	0	2196	7148	0	2290	7733	0	2352	9416	0	2633	11121	0	2667	12133	0	2740	14003	0	2876
	18	3905	0	2168	6215	0	2225	7080	0	2338	7656	0	2413	9317	0	2699	11066	0	2803	12089	0	2861	13948	0	3011
	20	3850	0	2196	6160	0	2254	7018	0	2376	7590	0	2457	9240	0	2746	11000	0	2890	11825	0	2991	13860	0	3150
	22	3795	0	2225	6105	0	2283	6930	0	2425	7480	0	2520	9141	0	2812	10934	0	3006	11957	0	3101	13794	0	3280
	24	3740	0	2254	6050	0	2312	6868	0	2473	7414	0	2581	9064	0	2878	10868	0	3121	11891	0	3219	13596	0	3413
1.2+2.5+3.5+6	16	3960	0	2139	6270	0	2196	7148	0	2290	7733	0	2352	9416	0	2633	11121	0	2667	12133	0	2740	14003	0	2876
	18	3905	0	2168	6215	0	2225	7080	0	2338	7656	0	2413	9317	0	2699	11066	0	2803	12089	0	2861	13948	0	3011
	20	3850	0	2196	6160	0	2254	7018	0	2376	7590	0	2457	9240	0	2746	11000	0	2890	11825	0	2991	13860	0	3150
	22	3795	0	2225	6105	0	2283	6930	0	2425	7480	0	2520	9141	0	2812	10934	0	3006	11957	0	3101	13794	0	3280
	24	3740	0	2254	6050	0	2312	6868	0	2473	7414	0	2581	9064	0	2878	10868	0	3121	11891	0	3219	13596	0	3413
1.2+2.5+5+5	16	3960	0	2139	6270	0	2196	7148	0	2290	7733	0	2352	9416	0	2633	11121	0	2667	12133	0	2740	14003	0	2876
	18	3905	0	2168	6215	0	2225	7080	0	2338	7656	0	2413	9317	0	2699	11066	0	2803	12089	0	2861	13948	0	3011
	20	3850	0	2196	6160	0	2254	7018	0	2376	7590	0	2457	9240	0	2746	11000	0	2890	11825	0	2991	13860	0	3150
	22	3795	0	2225	6105	0	2283	6930	0	2425	7480	0	2520	9141	0	2812	10934	0	3006	11957	0	3101	13794	0	3280
	24	3740	0	2254	6050	0	2312	6868	0	2473	7414	0	2581	9064	0	2878	10868	0	3121	11891	0	3219	13596	0	3413
1.2+2.5+5+6	16	3960	0	2139	6270	0	2196	7148	0	2290	7733	0	2352	9416	0	2633	11121	0	2667	12133	0	2740	14003	0	2876
	18	3905	0	2168	6215	0	2225	7080	0	2338	7656	0	2413	9317	0	2699	11066	0	2803	12089	0	2861	13948	0	3011
	20	3850	0	2196	6160	0	2254	7018	0	2376	7590	0	2457	9240	0	2746	11000	0	2890	11825	0	2991	13860	0	3150
	22	3795	0	2225	6105	0	2283	6930	0	2425	7480	0	2520	9141	0	2812	10934	0	3006	11957	0	3101	13794	0	3280
	24	3740	0	2254	6050	0	2312	6868	0	2473	7414	0	2581	9064	0	2878	10868	0	3121	11891	0	3219	13596	0	3413
1.2+2.5+6+6	16	3960	0	2139	6270	0	2196	7148	0	2290	7733	0	2352	9416	0	2633	11121	0	2667	12133	0	2740	14003	0	2876
	18	3905	0	2168	6215	0	2225	7080	0	2338	7656	0	2413	9317	0	2699	11066	0	2803	12089	0	2861	13948	0	3011
	20	3850	0	2196	6160	0	2254	7018	0	2376	7590	0	2457	9240	0	2746	11000	0	2890	11825	0	2991	13860	0	3150
	22	3795	0	2225	6105	0	2283	6930	0	2425	7480	0	2520	9141	0	2812	10934	0	3006	11957	0	3101	13794	0	3280
	24	3740	0	2254	6050	0	2312	6868	0	2473	7414	0	2581	9064	0	2878	10868	0	3121	11891	0	3219	13596	0	3413
1.2+3.5+3.5+3.5	16	3960	0	2139	6270	0	2196	7148	0	2290	7733	0	2352	9416	0	2633	11121	0	2667	12133	0	2740	14003	0	2876
	18	3905	0	2168	6215	0	2225	7080	0	2338	7656	0	2413	9317	0	2699	11066	0	2803	12089	0	2861	13948	0	3011
	20	3850	0	2196	6160	0	2254	7018	0	2376	7590	0	2457	9240	0	2746	11000	0	2890	11825	0	2991	13860	0	3150
	22	3795	0	2225	6105	0	2283	6930	0	2425	7480	0	2520	9141	0	2812	10934	0	3006	11957	0	3101	13794	0	3280
	24	3740	0	2254	6050	0	2312	6868	0	2473	7414	0	2581	9064	0	2878	10868	0	3121	11891	0	3219	13596	0	3413
1.2+3.5+3.5+5	16	3960	0	2139	6270	0	2196	7148	0	2290	7733	0	2352	9416	0	2633	11121	0	2667	12133	0	2740	14003	0	2876
	18	3905	0	2168	6215	0	2225	7080	0	2338	7656	0	2413	9317	0	2699	11066	0	2803	12089	0	2861	13948	0	3011
	20	3850	0	2196	6160	0	2254	7018	0	2376	7590	0	2457	9240	0	2746	11000	0	2890	11825	0	2991	13860	0	3150
	22	3795	0	2225	6105	0	2283	6930	0	2425	7480	0	2520	9141	0	2812	10934	0	3006	11957	0	3101	13794	0	3280
	24	3740	0	2254	6050	0	2312	6868	0	2473	7414	0	2581	9064	0	2878	10868	0	3121	11891	0	3219	13596	0	3413
1.2+3.5+3.5+6	16	3960	0	2139	6270	0	2196	7148	0	2290	7733	0	2352	9416	0	2633	11121	0	2667	12133	0	2740	14003	0	2876
	18	3905	0	2168	6215	0	2225	7080	0	2338	7656	0	2413	9317	0	2699	11066	0	2803	12089	0	2861	13948	0	3011
	20	3850	0	2196	6160	0	2254	7018	0	2376	7590	0	2457	9240	0	2746	11000	0	2890	11825	0	2991	13860	0	3150
	22	3795	0	2225	6105	0	2283	6930	0	2425	7480	0	2520	9141	0	2812	10934	0	3006	11957	0	3101	13794	0	3280
	24	3740	0	2254	6050	0	2312	6868	0	2473	7414	0	2581	9064	0	2878	10868	0	3121	11891	0	3219	13596	0	3413

EWB : Evaporator Wet Bulb temperature (°C)
EDB : Evaporator Dry Bulb temperature (°C)
(°CDB) : Outdoor Unit Inlet Air Dry Temperature (°C)

TC : Total Capacity (W)
SHC : Sensible Heating Capacity (W)
PI : Power Input

	INDOOR	OUTDOOR TEMPERATURE (°CDB)																							
	EDB	-15			-10			-7			-5			0			7			10			15		
	°C	TC	SHC	PI	TC	SHC	PI	TC	SHC	PI	TC	SHC	PI	TC	SHC	PI	TC	SHC	PI	TC	SHC	PI	TC	SHC	PI
1.2+3.5+5+5	16	3960	02139		6270	02196		7148	02290		7733	02352		9416	02633		11121	02667		12133	02740		14003	02876	
	18	3905	02168		6215	02225		7080	02338		7656	02413		9317	02699		11066	02803		12089	02861		13948	03011	
	20	3850	02196		6160	02254		7018	02376		7590	02457		9240	02746		11000	02890		11825	02991		13860	03150	
	22	3795	02225		6105	02283		6930	02425		7480	02520		9141	02812		10934	03006		11957	03101		13794	03280	
	24	3740	02254		6050	02312		6868	02473		7414	02581		9064	02878		10868	03121		11891	03219		13596	03413	
1.8+1.8+1.8+1.8	16	3456	01776		5472	01824		6238	01902		6749	01954		8218	02186		9706	02215		10589	02275		12221	02388	
	18	3408	01800		5424	01848		6179	01942		6682	02004		8131	02242		9658	02328		10550	02376		12173	02501	
	20	3360	01824		5376	01872		6125	01973		6624	02040		8064	02280		9600	02400		10320	02484		12096	02616	
	22	3312	01848		5328	01896		6048	02014		6528	02093		7978	02335		9542	02496		10435	02575		12038	02724	
	24	3264	01872		5280	01920		5994	02054		6470	02143		7910	02390		9485	02592		10378	02674		11866	02834	
1.8+1.8+1.8+2.5	16	3528	01998		5586	02052		6368	02139		6889	02198		8389	02460		9908	02492		10809	02560		12475	02687	
	18	3479	02025		5537	02079		6307	02184		6821	02255		8301	02522		9859	02619		10770	02673		12426	02813	
	20	3430	02052		5488	02106		6252	02219		6762	02295		8232	02565		9800	02700		10535	02795		12348	02943	
	22	3381	02079		5439	02133		6174	02266		6664	02354		8144	02627		9741	02808		10653	02897		12289	03065	
	24	3332	02106		5390	02160		6119	02311		6605	02411		8075	02689		9682	02916		10594	03008		12113	03189	
1.8+1.8+1.8+3.5	16	3672	01998		5814	02052		6628	02139		7171	02198		8731	02460		10312	02492		11251	02560		12985	02687	
	18	3621	02025		5763	02079		6565	02184		7099	02255		8639	02522		10261	02619		11210	02673		12934	02813	
	20	3570	02052		5712	02106		6508	02219		7038	02295		8568	02565		10200	02700		10965	02795		12852	02943	
	22	3519	02079		5661	02133		6426	02266		6936	02354		8476	02627		10139	02808		11087	02897		12791	03065	
	24	3468	02106		5610	02160		6369	02311		6875	02411		8405	02689		10078	02916		11026	03008		12607	03189	
1.8+1.8+1.8+5	16	3672	01998		5814	02052		6628	02139		7171	02198		8731	02460		10312	02492		11251	02560		12985	02687	
	18	3621	02025		5763	02079		6565	02184		7099	02255		8639	02522		10261	02619		11210	02673		12934	02813	
	20	3570	02052		5712	02106		6508	02219		7038	02295		8568	02565		10200	02700		10965	02795		12852	02943	
	22	3519	02079		5661	02133		6426	02266		6936	02354		8476	02627		10139	02808		11087	02897		12791	03065	
	24	3468	02106		5610	02160		6369	02311		6875	02411		8405	02689		10078	02916		11026	03008		12607	03189	
1.8+1.8+1.8+6	16	3672	01998		5814	02052		6628	02139		7171	02198		8731	02460		10312	02492		11251	02560		12985	02687	
	18	3621	02025		5763	02079		6565	02184		7099	02255		8639	02522		10261	02619		11210	02673		12934	02813	
	20	3570	02052		5712	02106		6508	02219		7038	02295		8568	02565		10200	02700		10965	02795		12852	02943	
	22	3519	02079		5661	02133		6426	02266		6936	02354		8476	02627		10139	02808		11087	02897		12791	03065	
	24	3468	02106		5610	02160		6369	02311		6875	02411		8405	02689		10078	02916		11026	03008		12607	03189	
1.8+1.8+2.5+2.5	16	3600	01998		5700	02052		6498	02139		7030	02198		8560	02460		10110	02492		11030	02560		12730	02687	
	18	3550	02025		5650	02079		6436	02184		6960	02255		8470	02522		10060	02619		10990	02673		12680	02813	
	20	3500	02052		5600	02106		6380	02219		6900	02295		8400	02565		10000	02700		10750	02795		12600	02943	
	22	3450	02079		5550	02133		6300	02266		6800	02354		8310	02627		9940	02808		10870	02897		12540	03065	
	24	3400	02106		5500	02160		6244	02311		6740	02411		8240	02689		9880	02916		10810	03008		12360	03189	
1.8+1.8+2.5+3.5	16	3672	01998		5814	02052		6628	02139		7171	02198		8731	02460		10312	02492		11251	02560		12985	02687	
	18	3621	02025		5763	02079		6565	02184		7099	02255		8639	02522		10261	02619		11210	02673		12934	02813	
	20	3570	02052		5712	02106		6508	02219		7038	02295		8568	02565		10200	02700		10965	02795		12852	02943	
	22	3519	02079		5661	02133		6426	02266		6936	02354		8476	02627		10139	02808		11087	02897		12791	03065	
	24	3468	02106		5610	02160		6369	02311		6875	02411		8405	02689		10078	02916		11026	03008		12607	03189	

EWB : Evaporator Wet Bulb temperature (°C)
EDB : Evaporator Dry Bulb temperature (°C)
(°CDB) : Outdoor Unit Inlet Air Dry Temperature (°C)

TC : Total Capacity (W)
SHC : Sensible Heating Capacity (W)
PI : Power Input

	INDOOR	OUTDOOR TEMPERATURE (°CDB)																							
	EDB	-15			-10			-7			-5			0			7			10			15		
	°C	TC	SHC	PI	TC	SHC	PI	TC	SHC	PI	TC	SHC	PI	TC	SHC	PI	TC	SHC	PI	TC	SHC	PI	TC	SHC	PI
1.8+1.8+2.5+5	16	3672	0	1998	5814	0	2052	6628	0	2139	7171	0	2198	8731	0	2460	10312	0	2492	11251	0	2560	12985	0	2687
	18	3621	0	2025	5763	0	2079	6565	0	2184	7099	0	2255	8639	0	2522	10261	0	2619	11210	0	2673	12934	0	2813
	20	3570	0	2052	5712	0	2106	6508	0	2219	7038	0	2295	8568	0	2565	10200	0	2700	10965	0	2795	12852	0	2943
	22	3519	0	2079	5661	0	2133	6426	0	2266	6936	0	2354	8476	0	2627	10139	0	2808	11087	0	2897	12791	0	3065
	24	3468	0	2106	5610	0	2160	6369	0	2311	6875	0	2411	8405	0	2689	10078	0	2916	11026	0	3008	12607	0	3189
1.8+1.8+2.5+6	16	3672	0	1998	5814	0	2052	6628	0	2139	7171	0	2198	8731	0	2460	10312	0	2492	11251	0	2560	12985	0	2687
	18	3621	0	2025	5763	0	2079	6565	0	2184	7099	0	2255	8639	0	2522	10261	0	2619	11210	0	2673	12934	0	2813
	20	3570	0	2052	5712	0	2106	6508	0	2219	7038	0	2295	8568	0	2565	10200	0	2700	10965	0	2795	12852	0	2943
	22	3519	0	2079	5661	0	2133	6426	0	2266	6936	0	2354	8476	0	2627	10139	0	2808	11087	0	2897	12791	0	3065
	24	3468	0	2106	5610	0	2160	6369	0	2311	6875	0	2411	8405	0	2689	10078	0	2916	11026	0	3008	12607	0	3189
1.8+1.8+3.5+3.5	16	3672	0	1998	5814	0	2052	6628	0	2139	7171	0	2198	8731	0	2460	10312	0	2492	11251	0	2560	12985	0	2687
	18	3621	0	2025	5763	0	2079	6565	0	2184	7099	0	2255	8639	0	2522	10261	0	2619	11210	0	2673	12934	0	2813
	20	3570	0	2052	5712	0	2106	6508	0	2219	7038	0	2295	8568	0	2565	10200	0	2700	10965	0	2795	12852	0	2943
	22	3519	0	2079	5661	0	2133	6426	0	2266	6936	0	2354	8476	0	2627	10139	0	2808	11087	0	2897	12791	0	3065
	24	3468	0	2106	5610	0	2160	6369	0	2311	6875	0	2411	8405	0	2689	10078	0	2916	11026	0	3008	12607	0	3189
1.8+1.8+3.5+5	16	3672	0	1998	5814	0	2052	6628	0	2139	7171	0	2198	8731	0	2460	10312	0	2492	11251	0	2560	12985	0	2687
	18	3621	0	2025	5763	0	2079	6565	0	2184	7099	0	2255	8639	0	2522	10261	0	2619	11210	0	2673	12934	0	2813
	20	3570	0	2052	5712	0	2106	6508	0	2219	7038	0	2295	8568	0	2565	10200	0	2700	10965	0	2795	12852	0	2943
	22	3519	0	2079	5661	0	2133	6426	0	2266	6936	0	2354	8476	0	2627	10139	0	2808	11087	0	2897	12791	0	3065
	24	3468	0	2106	5610	0	2160	6369	0	2311	6875	0	2411	8405	0	2689	10078	0	2916	11026	0	3008	12607	0	3189
1.8+1.8+3.5+6	16	3744	0	1998	5928	0	2052	6758	0	2139	7311	0	2198	8902	0	2460	10514	0	2492	11471	0	2560	13239	0	2687
	18	3692	0	2025	5876	0	2079	6693	0	2184	7238	0	2255	8809	0	2522	10462	0	2619	11430	0	2673	13187	0	2813
	20	3640	0	2052	5824	0	2106	6635	0	2219	7176	0	2295	8736	0	2565	10400	0	2700	11180	0	2795	13104	0	2943
	22	3588	0	2079	5772	0	2133	6552	0	2266	7072	0	2354	8642	0	2627	10338	0	2808	11305	0	2897	13042	0	3065
	24	3536	0	2106	5720	0	2160	6494	0	2311	7010	0	2411	8570	0	2689	10275	0	2916	11242	0	3008	12854	0	3189
1.8+1.8+5+5	16	3744	0	1998	5928	0	2052	6758	0	2139	7311	0	2198	8902	0	2460	10514	0	2492	11471	0	2560	13239	0	2687
	18	3692	0	2025	5876	0	2079	6693	0	2184	7238	0	2255	8809	0	2522	10462	0	2619	11430	0	2673	13187	0	2813
	20	3640	0	2052	5824	0	2106	6635	0	2219	7176	0	2295	8736	0	2565	10400	0	2700	11180	0	2795	13104	0	2943
	22	3588	0	2079	5772	0	2133	6552	0	2266	7072	0	2354	8642	0	2627	10338	0	2808	11305	0	2897	13042	0	3065
	24	3536	0	2106	5720	0	2160	6494	0	2311	7010	0	2411	8570	0	2689	10275	0	2916	11242	0	3008	12854	0	3189
1.8+1.8+5+6	16	3960	0	1946	6270	0	1999	7148	0	2084	7733	0	2141	9416	0	2396	11121	0	2427	12133	0	2493	14003	0	2617
	18	3905	0	1973	6215	0	2025	7080	0	2128	7656	0	2196	9317	0	2456	11066	0	2551	12089	0	2604	13948	0	2740
	20	3850	0	1999	6160	0	2051	7018	0	2162	7590	0	2236	9240	0	2499	11000	0	2630	11825	0	2722	13860	0	2867
	22	3795	0	2025	6105	0	2078	6930	0	2207	7480	0	2293	9141	0	2559	10934	0	2735	11957	0	2822	13794	0	2985
	24	3740	0	2051	6050	0	2104	6868	0	2251	7414	0	2349	9064	0	2619	10868	0	2840	11891	0	2930	13596	0	3106
1.8+2.5+2.5+2.5	16	3672	0	1998	5814	0	2052	6628	0	2139	7171	0	2198	8731	0	2460	10312	0	2492	11251	0	2560	12985	0	2687
	18	3621	0	2025	5763	0	2079	6565	0	2184	7099	0	2255	8639	0	2522	10261	0	2619	11210	0	2673	12934	0	2813
	20	3570	0	2052	5712	0	2106	6508	0	2219	7038	0	2295	8568	0	2565	10200	0	2700	10965	0	2795	12852	0	2943
	22	3519	0	2079	5661	0	2133	6426	0	2266	6936	0	2354	8476	0	2627	10139	0	2808	11087	0	2897	12791	0	3065
	24	3468	0	2106	5610	0	2160	6369	0	2311	6875	0	2411	8405	0	2689	10078	0	2916	11026	0	3008	12607	0	3189

EWB : Evaporator Wet Bulb temperature (°C)
EDB : Evaporator Dry Bulb temperature (°C)
(°CDB) : Outdoor Unit Inlet Air Dry Temperature (°C)

TC : Total Capacity (W)
SHC : Sensible Heating Capacity (W)
PI : Power Input

	INDOOR	OUTDOOR TEMPERATURE (°CDB)																							
	EDB	-15			-10			-7			-5			0			7			10			15		
	°C	TC	SHC	PI	TC	SHC	PI	TC	SHC	PI	TC	SHC	PI	TC	SHC	PI	TC	SHC	PI	TC	SHC	PI	TC	SHC	PI
1.8+2.5+2.5+3.5	16	3672	0	1998	5814	0	2052	6628	0	2139	7171	0	2198	8731	0	2460	10312	0	2492	11251	0	2560	12985	0	2687
	18	3621	0	2025	5763	0	2079	6565	0	2184	7099	0	2255	8639	0	2522	10261	0	2619	11210	0	2673	12934	0	2813
	20	3570	0	2052	5712	0	2106	6508	0	2219	7038	0	2295	8568	0	2565	10200	0	2700	10965	0	2795	12852	0	2943
	22	3519	0	2079	5661	0	2133	6426	0	2266	6936	0	2354	8476	0	2627	10139	0	2808	11087	0	2897	12791	0	3065
	24	3468	0	2106	5610	0	2160	6369	0	2311	6875	0	2411	8405	0	2689	10078	0	2916	11026	0	3008	12607	0	3189
1.8+2.5+2.5+5	16	3672	0	1998	5814	0	2052	6628	0	2139	7171	0	2198	8731	0	2460	10312	0	2492	11251	0	2560	12985	0	2687
	18	3621	0	2025	5763	0	2079	6565	0	2184	7099	0	2255	8639	0	2522	10261	0	2619	11210	0	2673	12934	0	2813
	20	3570	0	2052	5712	0	2106	6508	0	2219	7038	0	2295	8568	0	2565	10200	0	2700	10965	0	2795	12852	0	2943
	22	3519	0	2079	5661	0	2133	6426	0	2266	6936	0	2354	8476	0	2627	10139	0	2808	11087	0	2897	12791	0	3065
	24	3468	0	2106	5610	0	2160	6369	0	2311	6875	0	2411	8405	0	2689	10078	0	2916	11026	0	3008	12607	0	3189
1.8+2.5+2.5+6	16	3672	0	1998	5814	0	2052	6628	0	2139	7171	0	2198	8731	0	2460	10312	0	2492	11251	0	2560	12985	0	2687
	18	3621	0	2025	5763	0	2079	6565	0	2184	7099	0	2255	8639	0	2522	10261	0	2619	11210	0	2673	12934	0	2813
	20	3570	0	2052	5712	0	2106	6508	0	2219	7038	0	2295	8568	0	2565	10200	0	2700	10965	0	2795	12852	0	2943
	22	3519	0	2079	5661	0	2133	6426	0	2266	6936	0	2354	8476	0	2627	10139	0	2808	11087	0	2897	12791	0	3065
	24	3468	0	2106	5610	0	2160	6369	0	2311	6875	0	2411	8405	0	2689	10078	0	2916	11026	0	3008	12607	0	3189
1.8+2.5+3.5+3.5	16	3672	0	1998	5814	0	2052	6628	0	2139	7171	0	2198	8731	0	2460	10312	0	2492	11251	0	2560	12985	0	2687
	18	3621	0	2025	5763	0	2079	6565	0	2184	7099	0	2255	8639	0	2522	10261	0	2619	11210	0	2673	12934	0	2813
	20	3570	0	2052	5712	0	2106	6508	0	2219	7038	0	2295	8568	0	2565	10200	0	2700	10965	0	2795	12852	0	2943
	22	3519	0	2079	5661	0	2133	6426	0	2266	6936	0	2354	8476	0	2627	10139	0	2808	11087	0	2897	12791	0	3065
	24	3468	0	2106	5610	0	2160	6369	0	2311	6875	0	2411	8405	0	2689	10078	0	2916	11026	0	3008	12607	0	3189
1.8+2.5+3.5+5	16	3672	0	1998	5814	0	2052	6628	0	2139	7171	0	2198	8731	0	2460	10312	0	2492	11251	0	2560	12985	0	2687
	18	3621	0	2025	5763	0	2079	6565	0	2184	7099	0	2255	8639	0	2522	10261	0	2619	11210	0	2673	12934	0	2813
	20	3570	0	2052	5712	0	2106	6508	0	2219	7038	0	2295	8568	0	2565	10200	0	2700	10965	0	2795	12852	0	2943
	22	3519	0	2079	5661	0	2133	6426	0	2266	6936	0	2354	8476	0	2627	10139	0	2808	11087	0	2897	12791	0	3065
	24	3468	0	2106	5610	0	2160	6369	0	2311	6875	0	2411	8405	0	2689	10078	0	2916	11026	0	3008	12607	0	3189
1.8+2.5+3.5+6	16	3960	0	2072	6270	0	2128	7148	0	2219	7733	0	2279	9416	0	2551	11121	0	2584	12133	0	2654	14003	0	2786
	18	3905	0	2100	6215	0	2156	7080	0	2265	7656	0	2338	9317	0	2615	11066	0	2716	12089	0	2772	13948	0	2918
	20	3850	0	2128	6160	0	2184	7018	0	2302	7590	0	2380	9240	0	2660	11000	0	2800	11825	0	2898	13860	0	3052
	22	3795	0	2156	6105	0	2212	6930	0	2350	7480	0	2442	9141	0	2724	10934	0	2912	11957	0	3004	13794	0	3178
	24	3740	0	2184	6050	0	2240	6868	0	2396	7414	0	2500	9064	0	2789	10868	0	3024	11891	0	3119	13596	0	3307
1.8+2.5+5+5	16	3960	0	1946	6270	0	1999	7148	0	2084	7733	0	2141	9416	0	2396	11121	0	2427	12133	0	2493	14003	0	2617
	18	3905	0	1973	6215	0	2025	7080	0	2128	7656	0	2196	9317	0	2456	11066	0	2551	12089	0	2604	13948	0	2740
	20	3850	0	1999	6160	0	2051	7018	0	2162	7590	0	2236	9240	0	2499	11000	0	2630	11825	0	2722	13860	0	2867
	22	3795	0	2025	6105	0	2078	6930	0	2207	7480	0	2293	9141	0	2559	10934	0	2735	11957	0	2822	13794	0	2985
	24	3740	0	2051	6050	0	2104	6868	0	2251	7414	0	2349	9064	0	2619	10868	0	2840	11891	0	2930	13596	0	3106
1.8+2.5+5+6	16	3960	0	1946	6270	0	1999	7148	0	2084	7733	0	2141	9416	0	2396	11121	0	2427	12133	0	2493	14003	0	2617
	18	3905	0	1973	6215	0	2025	7080	0	2128	7656	0	2196	9317	0	2456	11066	0	2551	12089	0	2604	13948	0	2740
	20	3850	0	1999	6160	0	2051	7018	0	2162	7590	0	2236	9240	0	2499	11000	0	2630	11825	0	2722	13860	0	2867
	22	3795	0	2025	6105	0	2078	6930	0	2207	7480	0	2293	9141	0	2559	10934	0	2735	11957	0	2822	13794	0	2985
	24	3740	0	2051	6050	0	2104	6868	0	2251	7414	0	2349	9064	0	2619	10868	0	2840	11891	0	2930	13596	0	3106

EWB : Evaporator Wet Bulb temperature (°C)
EDB : Evaporator Dry Bulb temperature (°C)
(°CDB) : Outdoor Unit Inlet Air Dry Temperature (°C)

TC : Total Capacity (W)
SHC : Sensible Heating Capacity (W)
PI : Power Input

	INDOOR	OUTDOOR TEMPERATURE (°CDB)																							
	EDB	-15			-10			-7			-5			0			7			10			15		
	°C	TC	SHC	PI	TC	SHC	PI	TC	SHC	PI	TC	SHC	PI	TC	SHC	PI	TC	SHC	PI	TC	SHC	PI	TC	SHC	PI
1.8+3.5+3.5+3.5	16	3672	0	1998	5814	0	2052	6628	0	2139	7171	0	2198	8731	0	2460	10312	0	2492	11251	0	2560	12985	0	2687
	18	3621	0	2025	5763	0	2079	6565	0	2184	7099	0	2255	8639	0	2522	10261	0	2619	11210	0	2673	12934	0	2813
	20	3570	0	2052	5712	0	2106	6508	0	2219	7038	0	2295	8568	0	2565	10200	0	2700	10965	0	2795	12852	0	2943
	22	3519	0	2079	5661	0	2133	6426	0	2266	6936	0	2354	8476	0	2627	10139	0	2808	11087	0	2897	12791	0	3065
	24	3468	0	2106	5610	0	2160	6369	0	2311	6875	0	2411	8405	0	2689	10078	0	2916	11026	0	3008	12607	0	3189
1.8+3.5+3.5+5	16	3960	0	2072	6270	0	2128	7148	0	2219	7733	0	2279	9416	0	2551	11121	0	2584	12133	0	2654	14003	0	2786
	18	3905	0	2100	6215	0	2156	7080	0	2265	7656	0	2338	9317	0	2615	11066	0	2716	12089	0	2772	13948	0	2918
	20	3850	0	2128	6160	0	2184	7018	0	2302	7590	0	2380	9240	0	2660	11000	0	2800	11825	0	2898	13860	0	3052
	22	3795	0	2156	6105	0	2212	6930	0	2350	7480	0	2442	9141	0	2724	10934	0	2912	11957	0	3004	13794	0	3178
	24	3740	0	2184	6050	0	2240	6868	0	2396	7414	0	2500	9064	0	2789	10868	0	3024	11891	0	3119	13596	0	3307
1.8+3.5+3.5+6	16	3960	0	1946	6270	0	1999	7148	0	2084	7733	0	2141	9416	0	2396	11121	0	2427	12133	0	2493	14003	0	2617
	18	3905	0	1973	6215	0	2025	7080	0	2128	7656	0	2196	9317	0	2456	11066	0	2551	12089	0	2604	13948	0	2740
	20	3850	0	1999	6160	0	2051	7018	0	2162	7590	0	2236	9240	0	2499	11000	0	2630	11825	0	2722	13860	0	2867
	22	3795	0	2025	6105	0	2078	6930	0	2207	7480	0	2293	9141	0	2559	10934	0	2735	11957	0	2822	13794	0	2985
	24	3740	0	2051	6050	0	2104	6868	0	2251	7414	0	2349	9064	0	2619	10868	0	2840	11891	0	2930	13596	0	3106
1.8+3.5+5+5	16	3960	0	1946	6270	0	1999	7148	0	2084	7733	0	2141	9416	0	2396	11121	0	2427	12133	0	2493	14003	0	2617
	18	3905	0	1973	6215	0	2025	7080	0	2128	7656	0	2196	9317	0	2456	11066	0	2551	12089	0	2604	13948	0	2740
	20	3850	0	1999	6160	0	2051	7018	0	2162	7590	0	2236	9240	0	2499	11000	0	2630	11825	0	2722	13860	0	2867
	22	3795	0	2025	6105	0	2078	6930	0	2207	7480	0	2293	9141	0	2559	10934	0	2735	11957	0	2822	13794	0	2985
	24	3740	0	2051	6050	0	2104	6868	0	2251	7414	0	2349	9064	0	2619	10868	0	2840	11891	0	2930	13596	0	3106
2.5+2.5+2.5+2.5	16	3672	0	1998	5814	0	2052	6628	0	2139	7171	0	2198	8731	0	2460	10312	0	2492	11251	0	2560	12985	0	2687
	18	3621	0	2025	5763	0	2079	6565	0	2184	7099	0	2255	8639	0	2522	10261	0	2619	11210	0	2673	12934	0	2813
	20	3570	0	2052	5712	0	2106	6508	0	2219	7038	0	2295	8568	0	2565	10200	0	2700	10965	0	2795	12852	0	2943
	22	3519	0	2079	5661	0	2133	6426	0	2266	6936	0	2354	8476	0	2627	10139	0	2808	11087	0	2897	12791	0	3065
	24	3468	0	2106	5610	0	2160	6369	0	2311	6875	0	2411	8405	0	2689	10078	0	2916	11026	0	3008	12607	0	3189
2.5+2.5+2.5+3.5	16	3672	0	1998	5814	0	2052	6628	0	2139	7171	0	2198	8731	0	2460	10312	0	2492	11251	0	2560	12985	0	2687
	18	3621	0	2025	5763	0	2079	6565	0	2184	7099	0	2255	8639	0	2522	10261	0	2619	11210	0	2673	12934	0	2813
	20	3570	0	2052	5712	0	2106	6508	0	2219	7038	0	2295	8568	0	2565	10200	0	2700	10965	0	2795	12852	0	2943
	22	3519	0	2079	5661	0	2133	6426	0	2266	6936	0	2354	8476	0	2627	10139	0	2808	11087	0	2897	12791	0	3065
	24	3468	0	2106	5610	0	2160	6369	0	2311	6875	0	2411	8405	0	2689	10078	0	2916	11026	0	3008	12607	0	3189
2.5+2.5+2.5+5	16	3744	0	1998	5928	0	2052	6758	0	2139	7311	0	2198	8902	0	2460	10514	0	2492	11471	0	2560	13239	0	2687
	18	3692	0	2025	5876	0	2079	6693	0	2184	7238	0	2255	8809	0	2522	10462	0	2619	11430	0	2673	13187	0	2813
	20	3640	0	2052	5824	0	2106	6635	0	2219	7176	0	2295	8736	0	2565	10400	0	2700	11180	0	2795	13104	0	2943
	22	3588	0	2079	5772	0	2133	6552	0	2266	7072	0	2354	8642	0	2627	10338	0	2808	11305	0	2897	13042	0	3065
	24	3536	0	2106	5720	0	2160	6494	0	2311	7010	0	2411	8570	0	2689	10275	0	2916	11242	0	3008	12854	0	3189
2.5+2.5+2.5+6	16	3744	0	1998	5928	0	2052	6758	0	2139	7311	0	2198	8902	0	2460	10514	0	2492	11471	0	2560	13239	0	2687
	18	3692	0	2025	5876	0	2079	6693	0	2184	7238	0	2255	8809	0	2522	10462	0	2619	11430	0	2673	13187	0	2813
	20	3640	0	2052	5824	0	2106	6635	0	2219	7176	0	2295	8736	0	2565	10400	0	2700	11180	0	2795	13104	0	2943
	22	3588	0	2079	5772	0	2133	6552	0	2266	7072	0	2354	8642	0	2627	10338	0	2808	11305	0	2897	13042	0	3065
	24	3536	0	2106	5720	0	2160	6494	0	2311	7010	0	2411	8570	0	2689	10275	0	2916	11242	0	3008	12854	0	3189

EWB : Evaporator Wet Bulb temperature (°C)
EDB : Evaporator Dry Bulb temperature (°C)
(°CDB) : Outdoor Unit Inlet Air Dry Temperature (°C)

TC : Total Capacity (W)
SHC : Sensible Heating Capacity (W)
PI : Power Input

	INDOOR	OUTDOOR TEMPERATURE (°CDB)																							
	EDB	-15			-10			-7			-5			0			7			10			15		
	°C	TC	SHC	PI	TC	SHC	PI	TC	SHC	PI	TC	SHC	PI	TC	SHC	PI	TC	SHC	PI	TC	SHC	PI	TC	SHC	PI
2.5+2.5+3.5+3.5	16	3672	0	1998	5814	0	2052	6628	0	2139	7171	0	2198	8731	0	2460	10312	0	2492	11251	0	2560	12985	0	2687
	18	3621	0	2025	5763	0	2079	6565	0	2184	7099	0	2255	8639	0	2522	10261	0	2619	11210	0	2673	12934	0	2813
	20	3570	0	2052	5712	0	2106	6508	0	2219	7038	0	2295	8568	0	2565	10200	0	2700	10965	0	2795	12852	0	2943
	22	3519	0	2079	5661	0	2133	6426	0	2266	6936	0	2354	8476	0	2627	10139	0	2808	11087	0	2897	12791	0	3065
	24	3468	0	2106	5610	0	2160	6369	0	2311	6875	0	2411	8405	0	2689	10078	0	2916	11026	0	3008	12607	0	3189
2.5+2.5+3.5+5	16	3744	0	1998	5928	0	2052	6758	0	2139	7311	0	2198	8902	0	2460	10514	0	2492	11471	0	2560	13239	0	2687
	18	3692	0	2025	5876	0	2079	6693	0	2184	7238	0	2255	8809	0	2522	10462	0	2619	11430	0	2673	13187	0	2813
	20	3640	0	2052	5824	0	2106	6635	0	2219	7176	0	2295	8736	0	2565	10400	0	2700	11180	0	2795	13104	0	2943
	22	3588	0	2079	5772	0	2133	6552	0	2266	7072	0	2354	8642	0	2627	10338	0	2808	11305	0	2897	13042	0	3065
	24	3536	0	2106	5720	0	2160	6494	0	2311	7010	0	2411	8570	0	2689	10275	0	2916	11242	0	3008	12854	0	3189
2.5+2.5+3.5+6	16	3960	0	1946	6270	0	1999	7148	0	2084	7733	0	2141	9416	0	2396	11121	0	2427	12133	0	2493	14003	0	2617
	18	3905	0	1973	6215	0	2025	7080	0	2128	7656	0	2196	9317	0	2456	11066	0	2551	12089	0	2604	13948	0	2740
	20	3850	0	1999	6160	0	2051	7018	0	2162	7590	0	2236	9240	0	2499	11000	0	2630	11825	0	2722	13860	0	2867
	22	3795	0	2025	6105	0	2078	6930	0	2207	7480	0	2293	9141	0	2559	10934	0	2735	11957	0	2822	13794	0	2985
	24	3740	0	2051	6050	0	2104	6868	0	2251	7414	0	2349	9064	0	2619	10868	0	2840	11891	0	2930	13596	0	3106
2.5+2.5+5+5	16	3960	0	1946	6270	0	1999	7148	0	2084	7733	0	2141	9416	0	2396	11121	0	2427	12133	0	2493	14003	0	2617
	18	3905	0	1973	6215	0	2025	7080	0	2128	7656	0	2196	9317	0	2456	11066	0	2551	12089	0	2604	13948	0	2740
	20	3850	0	1999	6160	0	2051	7018	0	2162	7590	0	2236	9240	0	2499	11000	0	2630	11825	0	2722	13860	0	2867
	22	3795	0	2025	6105	0	2078	6930	0	2207	7480	0	2293	9141	0	2559	10934	0	2735	11957	0	2822	13794	0	2985
	24	3740	0	2051	6050	0	2104	6868	0	2251	7414	0	2349	9064	0	2619	10868	0	2840	11891	0	2930	13596	0	3106
2.5+3.5+3.5+3.5	16	3744	0	1998	5928	0	2052	6758	0	2139	7311	0	2198	8902	0	2460	10514	0	2492	11471	0	2560	13239	0	2687
	18	3692	0	2025	5876	0	2079	6693	0	2184	7238	0	2255	8809	0	2522	10462	0	2619	11430	0	2673	13187	0	2813
	20	3640	0	2052	5824	0	2106	6635	0	2219	7176	0	2295	8736	0	2565	10400	0	2700	11180	0	2795	13104	0	2943
	22	3588	0	2079	5772	0	2133	6552	0	2266	7072	0	2354	8642	0	2627	10338	0	2808	11305	0	2897	13042	0	3065
	24	3536	0	2106	5720	0	2160	6494	0	2311	7010	0	2411	8570	0	2689	10275	0	2916	11242	0	3008	12854	0	3189
2.5+3.5+3.5+5	16	3960	0	1946	6270	0	1999	7148	0	2084	7733	0	2141	9416	0	2396	11121	0	2427	12133	0	2493	14003	0	2617
	18	3905	0	1973	6215	0	2025	7080	0	2128	7656	0	2196	9317	0	2456	11066	0	2551	12089	0	2604	13948	0	2740
	20	3850	0	1999	6160	0	2051	7018	0	2162	7590	0	2236	9240	0	2499	11000	0	2630	11825	0	2722	13860	0	2867
	22	3795	0	2025	6105	0	2078	6930	0	2207	7480	0	2293	9141	0	2559	10934	0	2735	11957	0	2822	13794	0	2985
	24	3740	0	2051	6050	0	2104	6868	0	2251	7414	0	2349	9064	0	2619	10868	0	2840	11891	0	2930	13596	0	3106
2.5+3.5+3.5+6	16	3960	0	1946	6270	0	1999	7148	0	2084	7733	0	2141	9416	0	2396	11121	0	2427	12133	0	2493	14003	0	2617
	18	3905	0	1973	6215	0	2025	7080	0	2128	7656	0	2196	9317	0	2456	11066	0	2551	12089	0	2604	13948	0	2740
	20	3850	0	1999	6160	0	2051	7018	0	2162	7590	0	2236	9240	0	2499	11000	0	2630	11825	0	2722	13860	0	2867
	22	3795	0	2025	6105	0	2078	6930	0	2207	7480	0	2293	9141	0	2559	10934	0	2735	11957	0	2822	13794	0	2985
	24	3740	0	2051	6050	0	2104	6868	0	2251	7414	0	2349	9064	0	2619	10868	0	2840	11891	0	2930	13596	0	3106
3.5+3.5+3.5+3.5	16	3960	0	1946	6270	0	1999	7148	0	2084	7733	0	2141	9416	0	2396	11121	0	2427	12133	0	2493	14003	0	2617
	18	3905	0	1973	6215	0	2025	7080	0	2128	7656	0	2196	9317	0	2456	11066	0	2551	12089	0	2604	13948	0	2740
	20	3850	0	1999	6160	0	2051	7018	0	2162	7590	0	2236	9240	0	2499	11000	0	2630	11825	0	2722	13860	0	2867
	22	3795	0	2025	6105	0	2078	6930	0	2207	7480	0	2293	9141	0	2559	10934	0	2735	11957	0	2822	13794	0	2985
	24	3740	0	2051	6050	0	2104	6868	0	2251	7414	0	2349	9064	0	2619	10868	0	2840	11891	0	2930	13596	0	3106

EWB : Evaporator Wet Bulb temperature (°C)
EDB : Evaporator Dry Bulb temperature (°C)
(°CDB) : Outdoor Unit Inlet Air Dry Temperature (°C)

TC : Total Capacity (W)
SHC : Sensible Heating Capacity (W)
PI : Power Input

	INDOOR	OUTDOOR TEMPERATURE (°CDB)																							
	EDB	-15			-10			-7			-5			0			7			10			15		
	°C	TC	SHC	PI	TC	SHC	PI	TC	SHC	PI	TC	SHC	PI	TC	SHC	PI	TC	SHC	PI	TC	SHC	PI	TC	SHC	PI
3.5+3.5+3.5+5	16	3960	0	1946	6270	0	1999	7148	0	2084	7733	0	2141	9416	0	2396	11121	0	2427	12133	0	2493	14003	0	2617
	18	3905	0	1973	6215	0	2025	7080	0	2128	7656	0	2196	9317	0	2456	11066	0	2551	12089	0	2604	13948	0	2740
	20	3850	0	1999	6160	0	2051	7018	0	2162	7590	0	2236	9240	0	2499	11000	0	2630	11825	0	2722	13860	0	2867
	22	3795	0	2025	6105	0	2078	6930	0	2207	7480	0	2293	9141	0	2559	10934	0	2735	11957	0	2822	13794	0	2985
	24	3740	0	2051	6050	0	2104	6868	0	2251	7414	0	2349	9064	0	2619	10868	0	2840	11891	0	2930	13596	0	3106
1.2+1.2+1.2+1.2+1.2	16	3240	0	1739	5130	0	1786	5848	0	1862	6327	0	1913	7704	0	2141	9099	0	2169	9927	0	2228	11457	0	2338
	18	3195	0	1763	5085	0	1810	5792	0	1901	6264	0	1962	7623	0	2195	9054	0	2280	9891	0	2327	11412	0	2449
	20	3150	0	1786	5040	0	1833	5742	0	1932	6210	0	1998	7560	0	2233	9000	0	2350	9675	0	2432	11340	0	2562
	22	3105	0	1810	4995	0	1857	5670	0	1972	6120	0	2049	7479	0	2287	8946	0	2444	9783	0	2522	11286	0	2667
	24	3060	0	1833	4950	0	1880	5620	0	2011	6066	0	2099	7416	0	2341	8892	0	2538	9729	0	2618	11124	0	2775
1.2+1.2+1.2+1.2+1.8	16	3492	0	1746	5529	0	1794	6303	0	1870	6819	0	1921	8303	0	2150	9807	0	2178	10699	0	2237	12348	0	2348
	18	3444	0	1770	5481	0	1817	6243	0	1909	6751	0	1971	8216	0	2204	9758	0	2289	10660	0	2336	12300	0	2459
	20	3395	0	1794	5432	0	1841	6189	0	1940	6693	0	2006	8148	0	2242	9700	0	2360	10428	0	2443	12222	0	2572
	22	3347	0	1817	5384	0	1864	6111	0	1981	6596	0	2058	8061	0	2296	9642	0	2454	10544	0	2532	12164	0	2679
	24	3298	0	1841	5335	0	1888	6057	0	2020	6538	0	2107	7993	0	2351	9584	0	2549	10486	0	2629	11989	0	2787
1.2+1.2+1.2+1.2+2.5	16	3816	0	1776	6042	0	1824	6888	0	1902	7452	0	1954	9074	0	2186	10717	0	2215	11692	0	2275	13494	0	2388
	18	3763	0	1800	5989	0	1848	6822	0	1942	7378	0	2004	8978	0	2242	10664	0	2328	11649	0	2376	13441	0	2501
	20	3710	0	1824	5936	0	1872	6763	0	1973	7314	0	2040	8904	0	2280	10600	0	2400	11395	0	2484	13356	0	2616
	22	3657	0	1848	5883	0	1896	6678	0	2014	7208	0	2093	8809	0	2335	10536	0	2496	11522	0	2575	13292	0	2724
	24	3604	0	1872	5830	0	1920	6619	0	2054	7144	0	2143	8734	0	2390	10473	0	2592	11459	0	2674	13102	0	2834
1.2+1.2+1.2+1.2+3.5	16	3960	0	1820	6270	0	1870	7148	0	1949	7733	0	2002	9416	0	2241	11121	0	2271	12133	0	2332	14003	0	2448
	18	3905	0	1845	6215	0	1894	7080	0	1990	7656	0	2054	9317	0	2298	11066	0	2386	12089	0	2435	13948	0	2563
	20	3850	0	1870	6160	0	1919	7018	0	2022	7590	0	2091	9240	0	2337	11000	0	2460	11825	0	2546	13860	0	2681
	22	3795	0	1894	6105	0	1943	6930	0	2064	7480	0	2145	9141	0	2394	10934	0	2558	11957	0	2640	13794	0	2792
	24	3740	0	1919	6050	0	1968	6868	0	2105	7414	0	2197	9064	0	2450	10868	0	2657	11891	0	2740	13596	0	2905
1.2+1.2+1.2+1.2+5	16	3960	0	1820	6270	0	1870	7148	0	1949	7733	0	2002	9416	0	2241	11121	0	2271	12133	0	2332	14003	0	2448
	18	3905	0	1845	6215	0	1894	7080	0	1990	7656	0	2054	9317	0	2298	11066	0	2386	12089	0	2435	13948	0	2563
	20	3850	0	1870	6160	0	1919	7018	0	2022	7590	0	2091	9240	0	2337	11000	0	2460	11825	0	2546	13860	0	2681
	22	3795	0	1894	6105	0	1943	6930	0	2064	7480	0	2145	9141	0	2394	10934	0	2558	11957	0	2640	13794	0	2792
	24	3740	0	1919	6050	0	1968	6868	0	2105	7414	0	2197	9064	0	2450	10868	0	2657	11891	0	2740	13596	0	2905
1.2+1.2+1.2+1.2+6	16	3960	0	1820	6270	0	1870	7148	0	1949	7733	0	2002	9416	0	2241	11121	0	2271	12133	0	2332	14003	0	2448
	18	3905	0	1845	6215	0	1894	7080	0	1990	7656	0	2054	9317	0	2298	11066	0	2386	12089	0	2435	13948	0	2563
	20	3850	0	1870	6160	0	1919	7018	0	2022	7590	0	2091	9240	0	2337	11000	0	2460	11825	0	2546	13860	0	2681
	22	3795	0	1894	6105	0	1943	6930	0	2064	7480	0	2145	9141	0	2394	10934	0	2558	11957	0	2640	13794	0	2792
	24	3740	0	1919	6050	0	1968	6868	0	2105	7414	0	2197	9064	0	2450	10868	0	2657	11891	0	2740	13596	0	2905
1.2+1.2+1.2+1.8+1.8	16	3744	0	1820	5928	0	1870	6758	0	1949	7311	0	2002	8902	0	2241	10514	0	2271	11471	0	2332	13239	0	2448
	18	3692	0	1845	5876	0	1894	6693	0	1990	7238	0	2054	8809	0	2298	10462	0	2386	11430	0	2435	13187	0	2563
	20	3640	0	1870	5824	0	1919	6635	0	2022	7176	0	2091	8736	0	2337	10400	0	2460	11180	0	2546	13104	0	2681
	22	3588	0	1894	5772	0	1943	6552	0	2064	7072	0	2145	8642	0	2394	10338	0	2558	11305	0	2640	13042	0	2792
	24	3536	0	1919	5720	0	1968	6494	0	2105	7010	0	2197	8570	0	2450	10275	0	2657	11242	0	2740	12854	0	2905

EWB : Evaporator Wet Bulb temperature (°C)
EDB : Evaporator Dry Bulb temperature (°C)
(°CDB) : Outdoor Unit Inlet Air Dry Temperature (°C)

TC : Total Capacity (W)
SHC : Sensible Heating Capacity (W)
PI : Power Input

	INDOOR	OUTDOOR TEMPERATURE (°CDB)																							
	EDB	-15			-10			-7			-5			0			7			10			15		
	°C	TC	SHC	PI	TC	SHC	PI	TC	SHC	PI	TC	SHC	PI	TC	SHC	PI	TC	SHC	PI	TC	SHC	PI	TC	SHC	PI
1.2+1.2+1.2+1.8+2.5	16	3960	0	1820	6270	0	1870	7148	0	1949	7733	0	2002	9416	0	2241	11121	0	2271	12133	0	2332	14003	0	2448
	18	3905	0	1845	6215	0	1894	7080	0	1990	7656	0	2054	9317	0	2298	11066	0	2386	12089	0	2435	13948	0	2563
	20	3850	0	1870	6160	0	1919	7018	0	2022	7590	0	2091	9240	0	2337	11000	0	2460	11825	0	2546	13860	0	2681
	22	3795	0	1894	6105	0	1943	6930	0	2064	7480	0	2145	9141	0	2394	10934	0	2558	11957	0	2640	13794	0	2792
	24	3740	0	1919	6050	0	1968	6868	0	2105	7414	0	2197	9064	0	2450	10868	0	2657	11891	0	2740	13596	0	2905
1.2+1.2+1.2+1.8+3.5	16	3960	0	1820	6270	0	1870	7148	0	1949	7733	0	2002	9416	0	2241	11121	0	2271	12133	0	2332	14003	0	2448
	18	3905	0	1845	6215	0	1894	7080	0	1990	7656	0	2054	9317	0	2298	11066	0	2386	12089	0	2435	13948	0	2563
	20	3850	0	1870	6160	0	1919	7018	0	2022	7590	0	2091	9240	0	2337	11000	0	2460	11825	0	2546	13860	0	2681
	22	3795	0	1894	6105	0	1943	6930	0	2064	7480	0	2145	9141	0	2394	10934	0	2558	11957	0	2640	13794	0	2792
	24	3740	0	1919	6050	0	1968	6868	0	2105	7414	0	2197	9064	0	2450	10868	0	2657	11891	0	2740	13596	0	2905
1.2+1.2+1.2+1.8+5	16	3960	0	1820	6270	0	1870	7148	0	1949	7733	0	2002	9416	0	2241	11121	0	2271	12133	0	2332	14003	0	2448
	18	3905	0	1845	6215	0	1894	7080	0	1990	7656	0	2054	9317	0	2298	11066	0	2386	12089	0	2435	13948	0	2563
	20	3850	0	1870	6160	0	1919	7018	0	2022	7590	0	2091	9240	0	2337	11000	0	2460	11825	0	2546	13860	0	2681
	22	3795	0	1894	6105	0	1943	6930	0	2064	7480	0	2145	9141	0	2394	10934	0	2558	11957	0	2640	13794	0	2792
	24	3740	0	1919	6050	0	1968	6868	0	2105	7414	0	2197	9064	0	2450	10868	0	2657	11891	0	2740	13596	0	2905
1.2+1.2+1.2+1.8+6	16	3960	0	1820	6270	0	1870	7148	0	1949	7733	0	2002	9416	0	2241	11121	0	2271	12133	0	2332	14003	0	2448
	18	3905	0	1845	6215	0	1894	7080	0	1990	7656	0	2054	9317	0	2298	11066	0	2386	12089	0	2435	13948	0	2563
	20	3850	0	1870	6160	0	1919	7018	0	2022	7590	0	2091	9240	0	2337	11000	0	2460	11825	0	2546	13860	0	2681
	22	3795	0	1894	6105	0	1943	6930	0	2064	7480	0	2145	9141	0	2394	10934	0	2558	11957	0	2640	13794	0	2792
	24	3740	0	1919	6050	0	1968	6868	0	2105	7414	0	2197	9064	0	2450	10868	0	2657	11891	0	2740	13596	0	2905
1.2+1.2+1.2+2.5+2.5	16	3960	0	1820	6270	0	1870	7148	0	1949	7733	0	2002	9416	0	2241	11121	0	2271	12133	0	2332	14003	0	2448
	18	3905	0	1845	6215	0	1894	7080	0	1990	7656	0	2054	9317	0	2298	11066	0	2386	12089	0	2435	13948	0	2563
	20	3850	0	1870	6160	0	1919	7018	0	2022	7590	0	2091	9240	0	2337	11000	0	2460	11825	0	2546	13860	0	2681
	22	3795	0	1894	6105	0	1943	6930	0	2064	7480	0	2145	9141	0	2394	10934	0	2558	11957	0	2640	13794	0	2792
	24	3740	0	1919	6050	0	1968	6868	0	2105	7414	0	2197	9064	0	2450	10868	0	2657	11891	0	2740	13596	0	2905
1.2+1.2+1.2+2.5+3.5	16	3960	0	1820	6270	0	1870	7148	0	1949	7733	0	2002	9416	0	2241	11121	0	2271	12133	0	2332	14003	0	2448
	18	3905	0	1845	6215	0	1894	7080	0	1990	7656	0	2054	9317	0	2298	11066	0	2386	12089	0	2435	13948	0	2563
	20	3850	0	1870	6160	0	1919	7018	0	2022	7590	0	2091	9240	0	2337	11000	0	2460	11825	0	2546	13860	0	2681
	22	3795	0	1894	6105	0	1943	6930	0	2064	7480	0	2145	9141	0	2394	10934	0	2558	11957	0	2640	13794	0	2792
	24	3740	0	1919	6050	0	1968	6868	0	2105	7414	0	2197	9064	0	2450	10868	0	2657	11891	0	2740	13596	0	2905
1.2+1.2+1.2+2.5+5	16	3960	0	1820	6270	0	1870	7148	0	1949	7733	0	2002	9416	0	2241	11121	0	2271	12133	0	2332	14003	0	2448
	18	3905	0	1845	6215	0	1894	7080	0	1990	7656	0	2054	9317	0	2298	11066	0	2386	12089	0	2435	13948	0	2563
	20	3850	0	1870	6160	0	1919	7018	0	2022	7590	0	2091	9240	0	2337	11000	0	2460	11825	0	2546	13860	0	2681
	22	3795	0	1894	6105	0	1943	6930	0	2064	7480	0	2145	9141	0	2394	10934	0	2558	11957	0	2640	13794	0	2792
	24	3740	0	1919	6050	0	1968	6868	0	2105	7414	0	2197	9064	0	2450	10868	0	2657	11891	0	2740	13596	0	2905
1.2+1.2+1.2+2.5+6	16	3960	0	1820	6270	0	1870	7148	0	1949	7733	0	2002	9416	0	2241	11121	0	2271	12133	0	2332	14003	0	2448
	18	3905	0	1845	6215	0	1894	7080	0	1990	7656	0	2054	9317	0	2298	11066	0	2386	12089	0	2435	13948	0	2563
	20	3850	0	1870	6160	0	1919	7018	0	2022	7590	0	2091	9240	0	2337	11000	0	2460	11825	0	2546	13860	0	2681
	22	3795	0	1894	6105	0	1943	6930	0	2064	7480	0	2145	9141	0	2394	10934	0	2558	11957	0	2640	13794	0	2792
	24	3740	0	1919	6050	0	1968	6868	0	2105	7414	0	2197	9064	0	2450	10868	0	2657	11891	0	2740	13596	0	2905

EWB : Evaporator Wet Bulb temperature (°C)
EDB : Evaporator Dry Bulb temperature (°C)
(°CDB) : Outdoor Unit Inlet Air Dry Temperature (°C)

TC : Total Capacity (W)
SHC : Sensible Heating Capacity (W)
PI : Power Input

	INDOOR	OUTDOOR TEMPERATURE (°CDB)																							
	EDB	-15			-10			-7			-5			0			7			10			15		
	°C	TC	SHC	PI	TC	SHC	PI	TC	SHC	PI	TC	SHC	PI	TC	SHC	PI	TC	SHC	PI	TC	SHC	PI	TC	SHC	PI
1.2+1.2+1.2+3.5+3.5	16	3960	0	1820	6270	0	1870	7148	0	1949	7733	0	2002	9416	0	2241	11121	0	2271	12133	0	2332	14003	0	2448
	18	3905	0	1845	6215	0	1894	7080	0	1990	7656	0	2054	9317	0	2298	11066	0	2386	12089	0	2435	13948	0	2563
	20	3850	0	1870	6160	0	1919	7018	0	2022	7590	0	2091	9240	0	2337	11000	0	2460	11825	0	2546	13860	0	2681
	22	3795	0	1894	6105	0	1943	6930	0	2064	7480	0	2145	9141	0	2394	10934	0	2558	11957	0	2640	13794	0	2792
	24	3740	0	1919	6050	0	1968	6868	0	2105	7414	0	2197	9064	0	2450	10868	0	2657	11891	0	2740	13596	0	2905
1.2+1.2+1.2+3.5+5	16	3960	0	1820	6270	0	1870	7148	0	1949	7733	0	2002	9416	0	2241	11121	0	2271	12133	0	2332	14003	0	2448
	18	3905	0	1845	6215	0	1894	7080	0	1990	7656	0	2054	9317	0	2298	11066	0	2386	12089	0	2435	13948	0	2563
	20	3850	0	1870	6160	0	1919	7018	0	2022	7590	0	2091	9240	0	2337	11000	0	2460	11825	0	2546	13860	0	2681
	22	3795	0	1894	6105	0	1943	6930	0	2064	7480	0	2145	9141	0	2394	10934	0	2558	11957	0	2640	13794	0	2792
	24	3740	0	1919	6050	0	1968	6868	0	2105	7414	0	2197	9064	0	2450	10868	0	2657	11891	0	2740	13596	0	2905
1.2+1.2+1.2+3.5+6	16	3960	0	1820	6270	0	1870	7148	0	1949	7733	0	2002	9416	0	2241	11121	0	2271	12133	0	2332	14003	0	2448
	18	3905	0	1845	6215	0	1894	7080	0	1990	7656	0	2054	9317	0	2298	11066	0	2386	12089	0	2435	13948	0	2563
	20	3850	0	1870	6160	0	1919	7018	0	2022	7590	0	2091	9240	0	2337	11000	0	2460	11825	0	2546	13860	0	2681
	22	3795	0	1894	6105	0	1943	6930	0	2064	7480	0	2145	9141	0	2394	10934	0	2558	11957	0	2640	13794	0	2792
	24	3740	0	1919	6050	0	1968	6868	0	2105	7414	0	2197	9064	0	2450	10868	0	2657	11891	0	2740	13596	0	2905
1.2+1.2+1.2+5+5	16	3960	0	1820	6270	0	1870	7148	0	1949	7733	0	2002	9416	0	2241	11121	0	2271	12133	0	2332	14003	0	2448
	18	3905	0	1845	6215	0	1894	7080	0	1990	7656	0	2054	9317	0	2298	11066	0	2386	12089	0	2435	13948	0	2563
	20	3850	0	1870	6160	0	1919	7018	0	2022	7590	0	2091	9240	0	2337	11000	0	2460	11825	0	2546	13860	0	2681
	22	3795	0	1894	6105	0	1943	6930	0	2064	7480	0	2145	9141	0	2394	10934	0	2558	11957	0	2640	13794	0	2792
	24	3740	0	1919	6050	0	1968	6868	0	2105	7414	0	2197	9064	0	2450	10868	0	2657	11891	0	2740	13596	0	2905
1.2+1.2+1.2+5+6	16	3960	0	1820	6270	0	1870	7148	0	1949	7733	0	2002	9416	0	2241	11121	0	2271	12133	0	2332	14003	0	2448
	18	3905	0	1845	6215	0	1894	7080	0	1990	7656	0	2054	9317	0	2298	11066	0	2386	12089	0	2435	13948	0	2563
	20	3850	0	1870	6160	0	1919	7018	0	2022	7590	0	2091	9240	0	2337	11000	0	2460	11825	0	2546	13860	0	2681
	22	3795	0	1894	6105	0	1943	6930	0	2064	7480	0	2145	9141	0	2394	10934	0	2558	11957	0	2640	13794	0	2792
	24	3740	0	1919	6050	0	1968	6868	0	2105	7414	0	2197	9064	0	2450	10868	0	2657	11891	0	2740	13596	0	2905
1.2+1.2+1.8+1.8+1.8	16	3960	0	1820	6270	0	1870	7148	0	1949	7733	0	2002	9416	0	2241	11121	0	2271	12133	0	2332	14003	0	2448
	18	3905	0	1845	6215	0	1894	7080	0	1990	7656	0	2054	9317	0	2298	11066	0	2386	12089	0	2435	13948	0	2563
	20	3850	0	1870	6160	0	1919	7018	0	2022	7590	0	2091	9240	0	2337	11000	0	2460	11825	0	2546	13860	0	2681
	22	3795	0	1894	6105	0	1943	6930	0	2064	7480	0	2145	9141	0	2394	10934	0	2558	11957	0	2640	13794	0	2792
	24	3740	0	1919	6050	0	1968	6868	0	2105	7414	0	2197	9064	0	2450	10868	0	2657	11891	0	2740	13596	0	2905
1.2+1.2+1.8+1.8+2.5	16	3960	0	1820	6270	0	1870	7148	0	1949	7733	0	2002	9416	0	2241	11121	0	2271	12133	0	2332	14003	0	2448
	18	3905	0	1845	6215	0	1894	7080	0	1990	7656	0	2054	9317	0	2298	11066	0	2386	12089	0	2435	13948	0	2563
	20	3850	0	1870	6160	0	1919	7018	0	2022	7590	0	2091	9240	0	2337	11000	0	2460	11825	0	2546	13860	0	2681
	22	3795	0	1894	6105	0	1943	6930	0	2064	7480	0	2145	9141	0	2394	10934	0	2558	11957	0	2640	13794	0	2792
	24	3740	0	1919	6050	0	1968	6868	0	2105	7414	0	2197	9064	0	2450	10868	0	2657	11891	0	2740	13596	0	2905
1.2+1.2+1.8+1.8+3.5	16	3960	0	1820	6270	0	1870	7148	0	1949	7733	0	2002	9416	0	2241	11121	0	2271	12133	0	2332	14003	0	2448
	18	3905	0	1845	6215	0	1894	7080	0	1990	7656	0	2054	9317	0	2298	11066	0	2386	12089	0	2435	13948	0	2563
	20	3850	0	1870	6160	0	1919	7018	0	2022	7590	0	2091	9240	0	2337	11000	0	2460	11825	0	2546	13860	0	2681
	22	3795	0	1894	6105	0	1943	6930	0	2064	7480	0	2145	9141	0	2394	10934	0	2558	11957	0	2640	13794	0	2792
	24	3740	0	1919	6050	0	1968	6868	0	2105	7414	0	2197	9064	0	2450	10868	0	2657	11891	0	2740	13596	0	2905

EWB : Evaporator Wet Bulb temperature (°C)
EDB : Evaporator Dry Bulb temperature (°C)
(°CDB) : Outdoor Unit Inlet Air Dry Temperature (°C)

TC : Total Capacity (W)
SHC : Sensible Heating Capacity (W)
PI : Power Input

	INDOOR	OUTDOOR TEMPERATURE (°CDB)																							
	EDB	-15			-10			-7			-5			0			7			10			15		
	°C	TC	SHC	PI	TC	SHC	PI	TC	SHC	PI	TC	SHC	PI	TC	SHC	PI	TC	SHC	PI	TC	SHC	PI	TC	SHC	PI
1.2+1.2+1.8+1.8+5	16	3960	0	1820	6270	0	1870	7148	0	1949	7733	0	2002	9416	0	2241	11121	0	2271	12133	0	2332	14003	0	2448
	18	3905	0	1845	6215	0	1894	7080	0	1990	7656	0	2054	9317	0	2298	11066	0	2386	12089	0	2435	13948	0	2563
	20	3850	0	1870	6160	0	1919	7018	0	2022	7590	0	2091	9240	0	2337	11000	0	2460	11825	0	2546	13860	0	2681
	22	3795	0	1894	6105	0	1943	6930	0	2064	7480	0	2145	9141	0	2394	10934	0	2558	11957	0	2640	13794	0	2792
	24	3740	0	1919	6050	0	1968	6868	0	2105	7414	0	2197	9064	0	2450	10868	0	2657	11891	0	2740	13596	0	2905
1.2+1.2+1.8+1.8+6	16	3960	0	1820	6270	0	1870	7148	0	1949	7733	0	2002	9416	0	2241	11121	0	2271	12133	0	2332	14003	0	2448
	18	3905	0	1845	6215	0	1894	7080	0	1990	7656	0	2054	9317	0	2298	11066	0	2386	12089	0	2435	13948	0	2563
	20	3850	0	1870	6160	0	1919	7018	0	2022	7590	0	2091	9240	0	2337	11000	0	2460	11825	0	2546	13860	0	2681
	22	3795	0	1894	6105	0	1943	6930	0	2064	7480	0	2145	9141	0	2394	10934	0	2558	11957	0	2640	13794	0	2792
	24	3740	0	1919	6050	0	1968	6868	0	2105	7414	0	2197	9064	0	2450	10868	0	2657	11891	0	2740	13596	0	2905
1.2+1.2+1.8+2.5+2.5	16	3960	0	1820	6270	0	1870	7148	0	1949	7733	0	2002	9416	0	2241	11121	0	2271	12133	0	2332	14003	0	2448
	18	3905	0	1845	6215	0	1894	7080	0	1990	7656	0	2054	9317	0	2298	11066	0	2386	12089	0	2435	13948	0	2563
	20	3850	0	1870	6160	0	1919	7018	0	2022	7590	0	2091	9240	0	2337	11000	0	2460	11825	0	2546	13860	0	2681
	22	3795	0	1894	6105	0	1943	6930	0	2064	7480	0	2145	9141	0	2394	10934	0	2558	11957	0	2640	13794	0	2792
	24	3740	0	1919	6050	0	1968	6868	0	2105	7414	0	2197	9064	0	2450	10868	0	2657	11891	0	2740	13596	0	2905
1.2+1.2+1.8+2.5+3.5	16	3960	0	1820	6270	0	1870	7148	0	1949	7733	0	2002	9416	0	2241	11121	0	2271	12133	0	2332	14003	0	2448
	18	3905	0	1845	6215	0	1894	7080	0	1990	7656	0	2054	9317	0	2298	11066	0	2386	12089	0	2435	13948	0	2563
	20	3850	0	1870	6160	0	1919	7018	0	2022	7590	0	2091	9240	0	2337	11000	0	2460	11825	0	2546	13860	0	2681
	22	3795	0	1894	6105	0	1943	6930	0	2064	7480	0	2145	9141	0	2394	10934	0	2558	11957	0	2640	13794	0	2792
	24	3740	0	1919	6050	0	1968	6868	0	2105	7414	0	2197	9064	0	2450	10868	0	2657	11891	0	2740	13596	0	2905
1.2+1.2+1.8+2.5+5	16	3960	0	1820	6270	0	1870	7148	0	1949	7733	0	2002	9416	0	2241	11121	0	2271	12133	0	2332	14003	0	2448
	18	3905	0	1845	6215	0	1894	7080	0	1990	7656	0	2054	9317	0	2298	11066	0	2386	12089	0	2435	13948	0	2563
	20	3850	0	1870	6160	0	1919	7018	0	2022	7590	0	2091	9240	0	2337	11000	0	2460	11825	0	2546	13860	0	2681
	22	3795	0	1894	6105	0	1943	6930	0	2064	7480	0	2145	9141	0	2394	10934	0	2558	11957	0	2640	13794	0	2792
	24	3740	0	1919	6050	0	1968	6868	0	2105	7414	0	2197	9064	0	2450	10868	0	2657	11891	0	2740	13596	0	2905
1.2+1.2+1.8+2.5+6	16	3960	0	1820	6270	0	1870	7148	0	1949	7733	0	2002	9416	0	2241	11121	0	2271	12133	0	2332	14003	0	2448
	18	3905	0	1845	6215	0	1894	7080	0	1990	7656	0	2054	9317	0	2298	11066	0	2386	12089	0	2435	13948	0	2563
	20	3850	0	1870	6160	0	1919	7018	0	2022	7590	0	2091	9240	0	2337	11000	0	2460	11825	0	2546	13860	0	2681
	22	3795	0	1894	6105	0	1943	6930	0	2064	7480	0	2145	9141	0	2394	10934	0	2558	11957	0	2640	13794	0	2792
	24	3740	0	1919	6050	0	1968	6868	0	2105	7414	0	2197	9064	0	2450	10868	0	2657	11891	0	2740	13596	0	2905
1.2+1.2+1.8+3.5+3.5	16	3960	0	1820	6270	0	1870	7148	0	1949	7733	0	2002	9416	0	2241	11121	0	2271	12133	0	2332	14003	0	2448
	18	3905	0	1845	6215	0	1894	7080	0	1990	7656	0	2054	9317	0	2298	11066	0	2386	12089	0	2435	13948	0	2563
	20	3850	0	1870	6160	0	1919	7018	0	2022	7590	0	2091	9240	0	2337	11000	0	2460	11825	0	2546	13860	0	2681
	22	3795	0	1894	6105	0	1943	6930	0	2064	7480	0	2145	9141	0	2394	10934	0	2558	11957	0	2640	13794	0	2792
	24	3740	0	1919	6050	0	1968	6868	0	2105	7414	0	2197	9064	0	2450	10868	0	2657	11891	0	2740	13596	0	2905
1.2+1.2+1.8+3.5+5	16	3960	0	1820	6270	0	1870	7148	0	1949	7733	0	2002	9416	0	2241	11121	0	2271	12133	0	2332	14003	0	2448
	18	3905	0	1845	6215	0	1894	7080	0	1990	7656	0	2054	9317	0	2298	11066	0	2386	12089	0	2435	13948	0	2563
	20	3850	0	1870	6160	0	1919	7018	0	2022	7590	0	2091	9240	0	2337	11000	0	2460	11825	0	2546	13860	0	2681
	22	3795	0	1894	6105	0	1943	6930	0	2064	7480	0	2145	9141	0	2394	10934	0	2558	11957	0	2640	13794	0	2792
	24	3740	0	1919	6050	0	1968	6868	0	2105	7414	0	2197	9064	0	2450	10868	0	2657	11891	0	2740	13596	0	2905

EWB : Evaporator Wet Bulb temperature (°C)
EDB : Evaporator Dry Bulb temperature (°C)
(°CDB) : Outdoor Unit Inlet Air Dry Temperature (°C)

TC : Total Capacity (W)
SHC : Sensible Heating Capacity (W)
PI : Power Input

	INDOOR	OUTDOOR TEMPERATURE (°CDB)																							
	EDB	-15			-10			-7			-5			0			7			10			15		
	°C	TC	SHC	PI	TC	SHC	PI	TC	SHC	PI	TC	SHC	PI	TC	SHC	PI	TC	SHC	PI	TC	SHC	PI	TC	SHC	PI
1.2+1.2+1.8+3.5+6	16	3960	0	1820	6270	0	1870	7148	0	1949	7733	0	2002	9416	0	2241	11121	0	2271	12133	0	2332	14003	0	2448
	18	3905	0	1845	6215	0	1894	7080	0	1990	7656	0	2054	9317	0	2298	11066	0	2386	12089	0	2435	13948	0	2563
	20	3850	0	1870	6160	0	1919	7018	0	2022	7590	0	2091	9240	0	2337	11000	0	2460	11825	0	2546	13860	0	2681
	22	3795	0	1894	6105	0	1943	6930	0	2064	7480	0	2145	9141	0	2394	10934	0	2558	11957	0	2640	13794	0	2792
	24	3740	0	1919	6050	0	1968	6868	0	2105	7414	0	2197	9064	0	2450	10868	0	2657	11891	0	2740	13596	0	2905
1.2+1.2+1.8+5+5	16	3960	0	1820	6270	0	1870	7148	0	1949	7733	0	2002	9416	0	2241	11121	0	2271	12133	0	2332	14003	0	2448
	18	3905	0	1845	6215	0	1894	7080	0	1990	7656	0	2054	9317	0	2298	11066	0	2386	12089	0	2435	13948	0	2563
	20	3850	0	1870	6160	0	1919	7018	0	2022	7590	0	2091	9240	0	2337	11000	0	2460	11825	0	2546	13860	0	2681
	22	3795	0	1894	6105	0	1943	6930	0	2064	7480	0	2145	9141	0	2394	10934	0	2558	11957	0	2640	13794	0	2792
	24	3740	0	1919	6050	0	1968	6868	0	2105	7414	0	2197	9064	0	2450	10868	0	2657	11891	0	2740	13596	0	2905
1.2+1.2+1.8+5+6	16	3960	0	1820	6270	0	1870	7148	0	1949	7733	0	2002	9416	0	2241	11121	0	2271	12133	0	2332	14003	0	2448
	18	3905	0	1845	6215	0	1894	7080	0	1990	7656	0	2054	9317	0	2298	11066	0	2386	12089	0	2435	13948	0	2563
	20	3850	0	1870	6160	0	1919	7018	0	2022	7590	0	2091	9240	0	2337	11000	0	2460	11825	0	2546	13860	0	2681
	22	3795	0	1894	6105	0	1943	6930	0	2064	7480	0	2145	9141	0	2394	10934	0	2558	11957	0	2640	13794	0	2792
	24	3740	0	1919	6050	0	1968	6868	0	2105	7414	0	2197	9064	0	2450	10868	0	2657	11891	0	2740	13596	0	2905
1.2+1.2+2.5+2.5+2.5	16	3960	0	1820	6270	0	1870	7148	0	1949	7733	0	2002	9416	0	2241	11121	0	2271	12133	0	2332	14003	0	2448
	18	3905	0	1845	6215	0	1894	7080	0	1990	7656	0	2054	9317	0	2298	11066	0	2386	12089	0	2435	13948	0	2563
	20	3850	0	1870	6160	0	1919	7018	0	2022	7590	0	2091	9240	0	2337	11000	0	2460	11825	0	2546	13860	0	2681
	22	3795	0	1894	6105	0	1943	6930	0	2064	7480	0	2145	9141	0	2394	10934	0	2558	11957	0	2640	13794	0	2792
	24	3740	0	1919	6050	0	1968	6868	0	2105	7414	0	2197	9064	0	2450	10868	0	2657	11891	0	2740	13596	0	2905
1.2+1.2+2.5+2.5+3.5	16	3960	0	1820	6270	0	1870	7148	0	1949	7733	0	2002	9416	0	2241	11121	0	2271	12133	0	2332	14003	0	2448
	18	3905	0	1845	6215	0	1894	7080	0	1990	7656	0	2054	9317	0	2298	11066	0	2386	12089	0	2435	13948	0	2563
	20	3850	0	1870	6160	0	1919	7018	0	2022	7590	0	2091	9240	0	2337	11000	0	2460	11825	0	2546	13860	0	2681
	22	3795	0	1894	6105	0	1943	6930	0	2064	7480	0	2145	9141	0	2394	10934	0	2558	11957	0	2640	13794	0	2792
	24	3740	0	1919	6050	0	1968	6868	0	2105	7414	0	2197	9064	0	2450	10868	0	2657	11891	0	2740	13596	0	2905
1.2+1.2+2.5+2.5+5	16	3960	0	1820	6270	0	1870	7148	0	1949	7733	0	2002	9416	0	2241	11121	0	2271	12133	0	2332	14003	0	2448
	18	3905	0	1845	6215	0	1894	7080	0	1990	7656	0	2054	9317	0	2298	11066	0	2386	12089	0	2435	13948	0	2563
	20	3850	0	1870	6160	0	1919	7018	0	2022	7590	0	2091	9240	0	2337	11000	0	2460	11825	0	2546	13860	0	2681
	22	3795	0	1894	6105	0	1943	6930	0	2064	7480	0	2145	9141	0	2394	10934	0	2558	11957	0	2640	13794	0	2792
	24	3740	0	1919	6050	0	1968	6868	0	2105	7414	0	2197	9064	0	2450	10868	0	2657	11891	0	2740	13596	0	2905
1.2+1.2+2.5+2.5+6	16	3960	0	1820	6270	0	1870	7148	0	1949	7733	0	2002	9416	0	2241	11121	0	2271	12133	0	2332	14003	0	2448
	18	3905	0	1845	6215	0	1894	7080	0	1990	7656	0	2054	9317	0	2298	11066	0	2386	12089	0	2435	13948	0	2563
	20	3850	0	1870	6160	0	1919	7018	0	2022	7590	0	2091	9240	0	2337	11000	0	2460	11825	0	2546	13860	0	2681
	22	3795	0	1894	6105	0	1943	6930	0	2064	7480	0	2145	9141	0	2394	10934	0	2558	11957	0	2640	13794	0	2792
	24	3740	0	1919	6050	0	1968	6868	0	2105	7414	0	2197	9064	0	2450	10868	0	2657	11891	0	2740	13596	0	2905
1.2+1.2+2.5+3.5+3.5	16	3960	0	1820	6270	0	1870	7148	0	1949	7733	0	2002	9416	0	2241	11121	0	2271	12133	0	2332	14003	0	2448
	18	3905	0	1845	6215	0	1894	7080	0	1990	7656	0	2054	9317	0	2298	11066	0	2386	12089	0	2435	13948	0	2563
	20	3850	0	1870	6160	0	1919	7018	0	2022	7590	0	2091	9240	0	2337	11000	0	2460	11825	0	2546	13860	0	2681
	22	3795	0	1894	6105	0	1943	6930	0	2064	7480	0	2145	9141	0	2394	10934	0	2558	11957	0	2640	13794	0	2792
	24	3740	0	1919	6050	0	1968	6868	0	2105	7414	0	2197	9064	0	2450	10868	0	2657	11891	0	2740	13596	0	2905

EWB : Evaporator Wet Bulb temperature (°C)
EDB : Evaporator Dry Bulb temperature (°C)
(°CDB) : Outdoor Unit Inlet Air Dry Temperature (°C)

TC : Total Capacity (W)
SHC : Sensible Heating Capacity (W)
PI : Power Input

	INDOOR	OUTDOOR TEMPERATURE (°CDB)																							
	EDB	-15			-10			-7			-5			0			7			10			15		
	°C	TC	SHC	PI	TC	SHC	PI	TC	SHC	PI	TC	SHC	PI	TC	SHC	PI	TC	SHC	PI	TC	SHC	PI	TC	SHC	PI
1.2+1.2+2.5+3.5+5	16	3960	0	1820	6270	0	1870	7148	0	1949	7733	0	2002	9416	0	2241	11121	0	2271	12133	0	2332	14003	0	2448
	18	3905	0	1845	6215	0	1894	7080	0	1990	7656	0	2054	9317	0	2298	11066	0	2386	12089	0	2435	13948	0	2563
	20	3850	0	1870	6160	0	1919	7018	0	2022	7590	0	2091	9240	0	2337	11000	0	2460	11825	0	2546	13860	0	2681
	22	3795	0	1894	6105	0	1943	6930	0	2064	7480	0	2145	9141	0	2394	10934	0	2558	11957	0	2640	13794	0	2792
	24	3740	0	1919	6050	0	1968	6868	0	2105	7414	0	2197	9064	0	2450	10868	0	2657	11891	0	2740	13596	0	2905
1.2+1.2+2.5+3.5+6	16	3960	0	1820	6270	0	1870	7148	0	1949	7733	0	2002	9416	0	2241	11121	0	2271	12133	0	2332	14003	0	2448
	18	3905	0	1845	6215	0	1894	7080	0	1990	7656	0	2054	9317	0	2298	11066	0	2386	12089	0	2435	13948	0	2563
	20	3850	0	1870	6160	0	1919	7018	0	2022	7590	0	2091	9240	0	2337	11000	0	2460	11825	0	2546	13860	0	2681
	22	3795	0	1894	6105	0	1943	6930	0	2064	7480	0	2145	9141	0	2394	10934	0	2558	11957	0	2640	13794	0	2792
	24	3740	0	1919	6050	0	1968	6868	0	2105	7414	0	2197	9064	0	2450	10868	0	2657	11891	0	2740	13596	0	2905
1.2+1.2+2.5+5+5	16	3960	0	1820	6270	0	1870	7148	0	1949	7733	0	2002	9416	0	2241	11121	0	2271	12133	0	2332	14003	0	2448
	18	3905	0	1845	6215	0	1894	7080	0	1990	7656	0	2054	9317	0	2298	11066	0	2386	12089	0	2435	13948	0	2563
	20	3850	0	1870	6160	0	1919	7018	0	2022	7590	0	2091	9240	0	2337	11000	0	2460	11825	0	2546	13860	0	2681
	22	3795	0	1894	6105	0	1943	6930	0	2064	7480	0	2145	9141	0	2394	10934	0	2558	11957	0	2640	13794	0	2792
	24	3740	0	1919	6050	0	1968	6868	0	2105	7414	0	2197	9064	0	2450	10868	0	2657	11891	0	2740	13596	0	2905
1.2+1.2+3.5+3.5+3.5	16	3960	0	1820	6270	0	1870	7148	0	1949	7733	0	2002	9416	0	2241	11121	0	2271	12133	0	2332	14003	0	2448
	18	3905	0	1845	6215	0	1894	7080	0	1990	7656	0	2054	9317	0	2298	11066	0	2386	12089	0	2435	13948	0	2563
	20	3850	0	1870	6160	0	1919	7018	0	2022	7590	0	2091	9240	0	2337	11000	0	2460	11825	0	2546	13860	0	2681
	22	3795	0	1894	6105	0	1943	6930	0	2064	7480	0	2145	9141	0	2394	10934	0	2558	11957	0	2640	13794	0	2792
	24	3740	0	1919	6050	0	1968	6868	0	2105	7414	0	2197	9064	0	2450	10868	0	2657	11891	0	2740	13596	0	2905
1.2+1.2+3.5+3.5+5	16	3960	0	1820	6270	0	1870	7148	0	1949	7733	0	2002	9416	0	2241	11121	0	2271	12133	0	2332	14003	0	2448
	18	3905	0	1845	6215	0	1894	7080	0	1990	7656	0	2054	9317	0	2298	11066	0	2386	12089	0	2435	13948	0	2563
	20	3850	0	1870	6160	0	1919	7018	0	2022	7590	0	2091	9240	0	2337	11000	0	2460	11825	0	2546	13860	0	2681
	22	3795	0	1894	6105	0	1943	6930	0	2064	7480	0	2145	9141	0	2394	10934	0	2558	11957	0	2640	13794	0	2792
	24	3740	0	1919	6050	0	1968	6868	0	2105	7414	0	2197	9064	0	2450	10868	0	2657	11891	0	2740	13596	0	2905
1.2+1.2+3.5+3.5+6	16	3960	0	1820	6270	0	1870	7148	0	1949	7733	0	2002	9416	0	2241	11121	0	2271	12133	0	2332	14003	0	2448
	18	3905	0	1845	6215	0	1894	7080	0	1990	7656	0	2054	9317	0	2298	11066	0	2386	12089	0	2435	13948	0	2563
	20	3850	0	1870	6160	0	1919	7018	0	2022	7590	0	2091	9240	0	2337	11000	0	2460	11825	0	2546	13860	0	2681
	22	3795	0	1894	6105	0	1943	6930	0	2064	7480	0	2145	9141	0	2394	10934	0	2558	11957	0	2640	13794	0	2792
	24	3740	0	1919	6050	0	1968	6868	0	2105	7414	0	2197	9064	0	2450	10868	0	2657	11891	0	2740	13596	0	2905
1.2+1.8+1.8+1.8+1.8	16	3960	0	1820	6270	0	1870	7148	0	1949	7733	0	2002	9416	0	2241	11121	0	2271	12133	0	2332	14003	0	2448
	18	3905	0	1845	6215	0	1894	7080	0	1990	7656	0	2054	9317	0	2298	11066	0	2386	12089	0	2435	13948	0	2563
	20	3850	0	1870	6160	0	1919	7018	0	2022	7590	0	2091	9240	0	2337	11000	0	2460	11825	0	2546	13860	0	2681
	22	3795	0	1894	6105	0	1943	6930	0	2064	7480	0	2145	9141	0	2394	10934	0	2558	11957	0	2640	13794	0	2792
	24	3740	0	1919	6050	0	1968	6868	0	2105	7414	0	2197	9064	0	2450	10868	0	2657	11891	0	2740	13596	0	2905
1.2+1.8+1.8+1.8+2.5	16	3960	0	1820	6270	0	1870	7148	0	1949	7733	0	2002	9416	0	2241	11121	0	2271	12133	0	2332	14003	0	2448
	18	3905	0	1845	6215	0	1894	7080	0	1990	7656	0	2054	9317	0	2298	11066	0	2386	12089	0	2435	13948	0	2563
	20	3850	0	1870	6160	0	1919	7018	0	2022	7590	0	2091	9240	0	2337	11000	0	2460	11825	0	2546	13860	0	2681
	22	3795	0	1894	6105	0	1943	6930	0	2064	7480	0	2145	9141	0	2394	10934	0	2558	11957	0	2640	13794	0	2792
	24	3740	0	1919	6050	0	1968	6868	0	2105	7414	0	2197	9064	0	2450	10868	0	2657	11891	0	2740	13596	0	2905

EWB : Evaporator Wet Bulb temperature (°C)
EDB : Evaporator Dry Bulb temperature (°C)
(°CDB) : Outdoor Unit Inlet Air Dry Temperature (°C)

TC : Total Capacity (W)
SHC : Sensible Heating Capacity (W)
PI : Power Input

	INDOOR	OUTDOOR TEMPERATURE (°CDB)																							
	EDB	-15			-10			-7			-5			0			7			10			15		
	°C	TC	SHC	PI	TC	SHC	PI	TC	SHC	PI	TC	SHC	PI	TC	SHC	PI	TC	SHC	PI	TC	SHC	PI	TC	SHC	PI
1.2+1.8+1.8+1.8+3.5	16	3960	0	1820	6270	0	1870	7148	0	1949	7733	0	2002	9416	0	2241	11121	0	2271	12133	0	2332	14003	0	2448
	18	3905	0	1845	6215	0	1894	7080	0	1990	7656	0	2054	9317	0	2298	11066	0	2386	12089	0	2435	13948	0	2563
	20	3850	0	1870	6160	0	1919	7018	0	2022	7590	0	2091	9240	0	2337	11000	0	2460	11825	0	2546	13860	0	2681
	22	3795	0	1894	6105	0	1943	6930	0	2064	7480	0	2145	9141	0	2394	10934	0	2558	11957	0	2640	13794	0	2792
	24	3740	0	1919	6050	0	1968	6868	0	2105	7414	0	2197	9064	0	2450	10868	0	2657	11891	0	2740	13596	0	2905
1.2+1.8+1.8+1.8+5	16	3960	0	1820	6270	0	1870	7148	0	1949	7733	0	2002	9416	0	2241	11121	0	2271	12133	0	2332	14003	0	2448
	18	3905	0	1845	6215	0	1894	7080	0	1990	7656	0	2054	9317	0	2298	11066	0	2386	12089	0	2435	13948	0	2563
	20	3850	0	1870	6160	0	1919	7018	0	2022	7590	0	2091	9240	0	2337	11000	0	2460	11825	0	2546	13860	0	2681
	22	3795	0	1894	6105	0	1943	6930	0	2064	7480	0	2145	9141	0	2394	10934	0	2558	11957	0	2640	13794	0	2792
	24	3740	0	1919	6050	0	1968	6868	0	2105	7414	0	2197	9064	0	2450	10868	0	2657	11891	0	2740	13596	0	2905
1.2+1.8+1.8+1.8+6	16	3960	0	1820	6270	0	1870	7148	0	1949	7733	0	2002	9416	0	2241	11121	0	2271	12133	0	2332	14003	0	2448
	18	3905	0	1845	6215	0	1894	7080	0	1990	7656	0	2054	9317	0	2298	11066	0	2386	12089	0	2435	13948	0	2563
	20	3850	0	1870	6160	0	1919	7018	0	2022	7590	0	2091	9240	0	2337	11000	0	2460	11825	0	2546	13860	0	2681
	22	3795	0	1894	6105	0	1943	6930	0	2064	7480	0	2145	9141	0	2394	10934	0	2558	11957	0	2640	13794	0	2792
	24	3740	0	1919	6050	0	1968	6868	0	2105	7414	0	2197	9064	0	2450	10868	0	2657	11891	0	2740	13596	0	2905
1.2+1.8+1.8+2.5+2.5	16	3960	0	1820	6270	0	1870	7148	0	1949	7733	0	2002	9416	0	2241	11121	0	2271	12133	0	2332	14003	0	2448
	18	3905	0	1845	6215	0	1894	7080	0	1990	7656	0	2054	9317	0	2298	11066	0	2386	12089	0	2435	13948	0	2563
	20	3850	0	1870	6160	0	1919	7018	0	2022	7590	0	2091	9240	0	2337	11000	0	2460	11825	0	2546	13860	0	2681
	22	3795	0	1894	6105	0	1943	6930	0	2064	7480	0	2145	9141	0	2394	10934	0	2558	11957	0	2640	13794	0	2792
	24	3740	0	1919	6050	0	1968	6868	0	2105	7414	0	2197	9064	0	2450	10868	0	2657	11891	0	2740	13596	0	2905
1.2+1.8+1.8+2.5+3.5	16	3960	0	1820	6270	0	1870	7148	0	1949	7733	0	2002	9416	0	2241	11121	0	2271	12133	0	2332	14003	0	2448
	18	3905	0	1845	6215	0	1894	7080	0	1990	7656	0	2054	9317	0	2298	11066	0	2386	12089	0	2435	13948	0	2563
	20	3850	0	1870	6160	0	1919	7018	0	2022	7590	0	2091	9240	0	2337	11000	0	2460	11825	0	2546	13860	0	2681
	22	3795	0	1894	6105	0	1943	6930	0	2064	7480	0	2145	9141	0	2394	10934	0	2558	11957	0	2640	13794	0	2792
	24	3740	0	1919	6050	0	1968	6868	0	2105	7414	0	2197	9064	0	2450	10868	0	2657	11891	0	2740	13596	0	2905
1.2+1.8+1.8+2.5+5	16	3960	0	1820	6270	0	1870	7148	0	1949	7733	0	2002	9416	0	2241	11121	0	2271	12133	0	2332	14003	0	2448
	18	3905	0	1845	6215	0	1894	7080	0	1990	7656	0	2054	9317	0	2298	11066	0	2386	12089	0	2435	13948	0	2563
	20	3850	0	1870	6160	0	1919	7018	0	2022	7590	0	2091	9240	0	2337	11000	0	2460	11825	0	2546	13860	0	2681
	22	3795	0	1894	6105	0	1943	6930	0	2064	7480	0	2145	9141	0	2394	10934	0	2558	11957	0	2640	13794	0	2792
	24	3740	0	1919	6050	0	1968	6868	0	2105	7414	0	2197	9064	0	2450	10868	0	2657	11891	0	2740	13596	0	2905
1.2+1.8+1.8+2.5+6	16	3960	0	1820	6270	0	1870	7148	0	1949	7733	0	2002	9416	0	2241	11121	0	2271	12133	0	2332	14003	0	2448
	18	3905	0	1845	6215	0	1894	7080	0	1990	7656	0	2054	9317	0	2298	11066	0	2386	12089	0	2435	13948	0	2563
	20	3850	0	1870	6160	0	1919	7018	0	2022	7590	0	2091	9240	0	2337	11000	0	2460	11825	0	2546	13860	0	2681
	22	3795	0	1894	6105	0	1943	6930	0	2064	7480	0	2145	9141	0	2394	10934	0	2558	11957	0	2640	13794	0	2792
	24	3740	0	1919	6050	0	1968	6868	0	2105	7414	0	2197	9064	0	2450	10868	0	2657	11891	0	2740	13596	0	2905
1.2+1.8+1.8+3.5+3.5	16	3960	0	1820	6270	0	1870	7148	0	1949	7733	0	2002	9416	0	2241	11121	0	2271	12133	0	2332	14003	0	2448
	18	3905	0	1845	6215	0	1894	7080	0	1990	7656	0	2054	9317	0	2298	11066	0	2386	12089	0	2435	13948	0	2563
	20	3850	0	1870	6160	0	1919	7018	0	2022	7590	0	2091	9240	0	2337	11000	0	2460	11825	0	2546	13860	0	2681
	22	3795	0	1894	6105	0	1943	6930	0	2064	7480	0	2145	9141	0	2394	10934	0	2558	11957	0	2640	13794	0	2792
	24	3740	0	1919	6050	0	1968	6868	0	2105	7414	0	2197	9064	0	2450	10868	0	2657	11891	0	2740	13596	0	2905

EWB : Evaporator Wet Bulb temperature (°C)
EDB : Evaporator Dry Bulb temperature (°C)
(°CDB) : Outdoor Unit Inlet Air Dry Temperature (°C)

TC : Total Capacity (W)
SHC : Sensible Heating Capacity (W)
PI : Power Input

	INDOOR	OUTDOOR TEMPERATURE (°CDB)																							
	EDB	-15			-10			-7			-5			0			7			10			15		
	°C	TC	SHC	PI	TC	SHC	PI	TC	SHC	PI	TC	SHC	PI	TC	SHC	PI	TC	SHC	PI	TC	SHC	PI	TC	SHC	PI
1.2+1.8+1.8+3.5+5	16	3960	0	1820	6270	0	1870	7148	0	1949	7733	0	2002	9416	0	2241	11121	0	2271	12133	0	2332	14003	0	2448
	18	3905	0	1845	6215	0	1894	7080	0	1990	7656	0	2054	9317	0	2298	11066	0	2386	12089	0	2435	13948	0	2563
	20	3850	0	1870	6160	0	1919	7018	0	2022	7590	0	2091	9240	0	2337	11000	0	2460	11825	0	2546	13860	0	2681
	22	3795	0	1894	6105	0	1943	6930	0	2064	7480	0	2145	9141	0	2394	10934	0	2558	11957	0	2640	13794	0	2792
	24	3740	0	1919	6050	0	1968	6868	0	2105	7414	0	2197	9064	0	2450	10868	0	2657	11891	0	2740	13596	0	2905
1.2+1.8+1.8+3.5+6	16	3960	0	1820	6270	0	1870	7148	0	1949	7733	0	2002	9416	0	2241	11121	0	2271	12133	0	2332	14003	0	2448
	18	3905	0	1845	6215	0	1894	7080	0	1990	7656	0	2054	9317	0	2298	11066	0	2386	12089	0	2435	13948	0	2563
	20	3850	0	1870	6160	0	1919	7018	0	2022	7590	0	2091	9240	0	2337	11000	0	2460	11825	0	2546	13860	0	2681
	22	3795	0	1894	6105	0	1943	6930	0	2064	7480	0	2145	9141	0	2394	10934	0	2558	11957	0	2640	13794	0	2792
	24	3740	0	1919	6050	0	1968	6868	0	2105	7414	0	2197	9064	0	2450	10868	0	2657	11891	0	2740	13596	0	2905
1.2+1.8+1.8+5+5	16	3960	0	1820	6270	0	1870	7148	0	1949	7733	0	2002	9416	0	2241	11121	0	2271	12133	0	2332	14003	0	2448
	18	3905	0	1845	6215	0	1894	7080	0	1990	7656	0	2054	9317	0	2298	11066	0	2386	12089	0	2435	13948	0	2563
	20	3850	0	1870	6160	0	1919	7018	0	2022	7590	0	2091	9240	0	2337	11000	0	2460	11825	0	2546	13860	0	2681
	22	3795	0	1894	6105	0	1943	6930	0	2064	7480	0	2145	9141	0	2394	10934	0	2558	11957	0	2640	13794	0	2792
	24	3740	0	1919	6050	0	1968	6868	0	2105	7414	0	2197	9064	0	2450	10868	0	2657	11891	0	2740	13596	0	2905
1.2+1.8+2.5+2.5+2.5	16	3960	0	1820	6270	0	1870	7148	0	1949	7733	0	2002	9416	0	2241	11121	0	2271	12133	0	2332	14003	0	2448
	18	3905	0	1845	6215	0	1894	7080	0	1990	7656	0	2054	9317	0	2298	11066	0	2386	12089	0	2435	13948	0	2563
	20	3850	0	1870	6160	0	1919	7018	0	2022	7590	0	2091	9240	0	2337	11000	0	2460	11825	0	2546	13860	0	2681
	22	3795	0	1894	6105	0	1943	6930	0	2064	7480	0	2145	9141	0	2394	10934	0	2558	11957	0	2640	13794	0	2792
	24	3740	0	1919	6050	0	1968	6868	0	2105	7414	0	2197	9064	0	2450	10868	0	2657	11891	0	2740	13596	0	2905
1.2+1.8+2.5+2.5+3.5	16	3960	0	1820	6270	0	1870	7148	0	1949	7733	0	2002	9416	0	2241	11121	0	2271	12133	0	2332	14003	0	2448
	18	3905	0	1845	6215	0	1894	7080	0	1990	7656	0	2054	9317	0	2298	11066	0	2386	12089	0	2435	13948	0	2563
	20	3850	0	1870	6160	0	1919	7018	0	2022	7590	0	2091	9240	0	2337	11000	0	2460	11825	0	2546	13860	0	2681
	22	3795	0	1894	6105	0	1943	6930	0	2064	7480	0	2145	9141	0	2394	10934	0	2558	11957	0	2640	13794	0	2792
	24	3740	0	1919	6050	0	1968	6868	0	2105	7414	0	2197	9064	0	2450	10868	0	2657	11891	0	2740	13596	0	2905
1.2+1.8+2.5+2.5+5	16	3960	0	1820	6270	0	1870	7148	0	1949	7733	0	2002	9416	0	2241	11121	0	2271	12133	0	2332	14003	0	2448
	18	3905	0	1845	6215	0	1894	7080	0	1990	7656	0	2054	9317	0	2298	11066	0	2386	12089	0	2435	13948	0	2563
	20	3850	0	1870	6160	0	1919	7018	0	2022	7590	0	2091	9240	0	2337	11000	0	2460	11825	0	2546	13860	0	2681
	22	3795	0	1894	6105	0	1943	6930	0	2064	7480	0	2145	9141	0	2394	10934	0	2558	11957	0	2640	13794	0	2792
	24	3740	0	1919	6050	0	1968	6868	0	2105	7414	0	2197	9064	0	2450	10868	0	2657	11891	0	2740	13596	0	2905
1.2+1.8+2.5+2.5+6	16	3960	0	1820	6270	0	1870	7148	0	1949	7733	0	2002	9416	0	2241	11121	0	2271	12133	0	2332	14003	0	2448
	18	3905	0	1845	6215	0	1894	7080	0	1990	7656	0	2054	9317	0	2298	11066	0	2386	12089	0	2435	13948	0	2563
	20	3850	0	1870	6160	0	1919	7018	0	2022	7590	0	2091	9240	0	2337	11000	0	2460	11825	0	2546	13860	0	2681
	22	3795	0	1894	6105	0	1943	6930	0	2064	7480	0	2145	9141	0	2394	10934	0	2558	11957	0	2640	13794	0	2792
	24	3740	0	1919	6050	0	1968	6868	0	2105	7414	0	2197	9064	0	2450	10868	0	2657	11891	0	2740	13596	0	2905
1.2+1.8+2.5+3.5+3.5	16	3960	0	1820	6270	0	1870	7148	0	1949	7733	0	2002	9416	0	2241	11121	0	2271	12133	0	2332	14003	0	2448
	18	3905	0	1845	6215	0	1894	7080	0	1990	7656	0	2054	9317	0	2298	11066	0	2386	12089	0	2435	13948	0	2563
	20	3850	0	1870	6160	0	1919	7018	0	2022	7590	0	2091	9240	0	2337	11000	0	2460	11825	0	2546	13860	0	2681
	22	3795	0	1894	6105	0	1943	6930	0	2064	7480	0	2145	9141	0	2394	10934	0	2558	11957	0	2640	13794	0	2792
	24	3740	0	1919	6050	0	1968	6868	0	2105	7414	0	2197	9064	0	2450	10868	0	2657	11891	0	2740	13596	0	2905

EWB : Evaporator Wet Bulb temperature (°C)
EDB : Evaporator Dry Bulb temperature (°C)
(°CDB) : Outdoor Unit Inlet Air Dry Temperature (°C)

TC : Total Capacity (W)
SHC : Sensible Heating Capacity (W)
PI : Power Input

	INDOOR	OUTDOOR TEMPERATURE (°CDB)																							
	EDB	-15			-10			-7			-5			0			7			10			15		
	°C	TC	SHC	PI	TC	SHC	PI	TC	SHC	PI	TC	SHC	PI	TC	SHC	PI	TC	SHC	PI	TC	SHC	PI	TC	SHC	PI
1.2+1.8+2.5+3.5+5	16	3960	0	1820	6270	0	1870	7148	0	1949	7733	0	2002	9416	0	2241	11121	0	2271	12133	0	2332	14003	0	2448
	18	3905	0	1845	6215	0	1894	7080	0	1990	7656	0	2054	9317	0	2298	11066	0	2386	12089	0	2435	13948	0	2563
	20	3850	0	1870	6160	0	1919	7018	0	2022	7590	0	2091	9240	0	2337	11000	0	2460	11825	0	2546	13860	0	2681
	22	3795	0	1894	6105	0	1943	6930	0	2064	7480	0	2145	9141	0	2394	10934	0	2558	11957	0	2640	13794	0	2792
	24	3740	0	1919	6050	0	1968	6868	0	2105	7414	0	2197	9064	0	2450	10868	0	2657	11891	0	2740	13596	0	2905
1.2+1.8+2.5+3.5+6	16	3960	0	1820	6270	0	1870	7148	0	1949	7733	0	2002	9416	0	2241	11121	0	2271	12133	0	2332	14003	0	2448
	18	3905	0	1845	6215	0	1894	7080	0	1990	7656	0	2054	9317	0	2298	11066	0	2386	12089	0	2435	13948	0	2563
	20	3850	0	1870	6160	0	1919	7018	0	2022	7590	0	2091	9240	0	2337	11000	0	2460	11825	0	2546	13860	0	2681
	22	3795	0	1894	6105	0	1943	6930	0	2064	7480	0	2145	9141	0	2394	10934	0	2558	11957	0	2640	13794	0	2792
	24	3740	0	1919	6050	0	1968	6868	0	2105	7414	0	2197	9064	0	2450	10868	0	2657	11891	0	2740	13596	0	2905
1.2+1.8+2.5+5+5	16	3960	0	1820	6270	0	1870	7148	0	1949	7733	0	2002	9416	0	2241	11121	0	2271	12133	0	2332	14003	0	2448
	18	3905	0	1845	6215	0	1894	7080	0	1990	7656	0	2054	9317	0	2298	11066	0	2386	12089	0	2435	13948	0	2563
	20	3850	0	1870	6160	0	1919	7018	0	2022	7590	0	2091	9240	0	2337	11000	0	2460	11825	0	2546	13860	0	2681
	22	3795	0	1894	6105	0	1943	6930	0	2064	7480	0	2145	9141	0	2394	10934	0	2558	11957	0	2640	13794	0	2792
	24	3740	0	1919	6050	0	1968	6868	0	2105	7414	0	2197	9064	0	2450	10868	0	2657	11891	0	2740	13596	0	2905
1.2+1.8+3.5+3.5+3.5	16	3960	0	1820	6270	0	1870	7148	0	1949	7733	0	2002	9416	0	2241	11121	0	2271	12133	0	2332	14003	0	2448
	18	3905	0	1845	6215	0	1894	7080	0	1990	7656	0	2054	9317	0	2298	11066	0	2386	12089	0	2435	13948	0	2563
	20	3850	0	1870	6160	0	1919	7018	0	2022	7590	0	2091	9240	0	2337	11000	0	2460	11825	0	2546	13860	0	2681
	22	3795	0	1894	6105	0	1943	6930	0	2064	7480	0	2145	9141	0	2394	10934	0	2558	11957	0	2640	13794	0	2792
	24	3740	0	1919	6050	0	1968	6868	0	2105	7414	0	2197	9064	0	2450	10868	0	2657	11891	0	2740	13596	0	2905
1.2+1.8+3.5+3.5+5	16	3960	0	1820	6270	0	1870	7148	0	1949	7733	0	2002	9416	0	2241	11121	0	2271	12133	0	2332	14003	0	2448
	18	3905	0	1845	6215	0	1894	7080	0	1990	7656	0	2054	9317	0	2298	11066	0	2386	12089	0	2435	13948	0	2563
	20	3850	0	1870	6160	0	1919	7018	0	2022	7590	0	2091	9240	0	2337	11000	0	2460	11825	0	2546	13860	0	2681
	22	3795	0	1894	6105	0	1943	6930	0	2064	7480	0	2145	9141	0	2394	10934	0	2558	11957	0	2640	13794	0	2792
	24	3740	0	1919	6050	0	1968	6868	0	2105	7414	0	2197	9064	0	2450	10868	0	2657	11891	0	2740	13596	0	2905
1.8+1.8+1.8+1.8+1.8	16	3960	0	1820	6270	0	1870	7148	0	1949	7733	0	2002	9416	0	2241	11121	0	2271	12133	0	2332	14003	0	2448
	18	3905	0	1845	6215	0	1894	7080	0	1990	7656	0	2054	9317	0	2298	11066	0	2386	12089	0	2435	13948	0	2563
	20	3850	0	1870	6160	0	1919	7018	0	2022	7590	0	2091	9240	0	2337	11000	0	2460	11825	0	2546	13860	0	2681
	22	3795	0	1894	6105	0	1943	6930	0	2064	7480	0	2145	9141	0	2394	10934	0	2558	11957	0	2640	13794	0	2792
	24	3740	0	1919	6050	0	1968	6868	0	2105	7414	0	2197	9064	0	2450	10868	0	2657	11891	0	2740	13596	0	2905
1.8+1.8+1.8+1.8+2.5	16	3960	0	1820	6270	0	1870	7148	0	1949	7733	0	2002	9416	0	2241	11121	0	2271	12133	0	2332	14003	0	2448
	18	3905	0	1845	6215	0	1894	7080	0	1990	7656	0	2054	9317	0	2298	11066	0	2386	12089	0	2435	13948	0	2563
	20	3850	0	1870	6160	0	1919	7018	0	2022	7590	0	2091	9240	0	2337	11000	0	2460	11825	0	2546	13860	0	2681
	22	3795	0	1894	6105	0	1943	6930	0	2064	7480	0	2145	9141	0	2394	10934	0	2558	11957	0	2640	13794	0	2792
	24	3740	0	1919	6050	0	1968	6868	0	2105	7414	0	2197	9064	0	2450	10868	0	2657	11891	0	2740	13596	0	2905
1.8+1.8+1.8+1.8+3.5	16	3960	0	1820	6270	0	1870	7148	0	1949	7733	0	2002	9416	0	2241	11121	0	2271	12133	0	2332	14003	0	2448
	18	3905	0	1845	6215	0	1894	7080	0	1990	7656	0	2054	9317	0	2298	11066	0	2386	12089	0	2435	13948	0	2563
	20	3850	0	1870	6160	0	1919	7018	0	2022	7590	0	2091	9240	0	2337	11000	0	2460	11825	0	2546	13860	0	2681
	22	3795	0	1894	6105	0	1943	6930	0	2064	7480	0	2145	9141	0	2394	10934	0	2558	11957	0	2640	13794	0	2792
	24	3740	0	1919	6050	0	1968	6868	0	2105	7414	0	2197	9064	0	2450	10868	0	2657	11891	0	2740	13596	0	2905

EWB : Evaporator Wet Bulb temperature (°C)
EDB : Evaporator Dry Bulb temperature (°C)
(°CDB) : Outdoor Unit Inlet Air Dry Temperature (°C)

TC : Total Capacity (W)
SHC : Sensible Heating Capacity (W)
PI : Power Input

	INDOOR	OUTDOOR TEMPERATURE (°CDB)																							
	EDB	-15			-10			-7			-5			0			7			10			15		
	°C	TC	SHC	PI	TC	SHC	PI	TC	SHC	PI	TC	SHC	PI	TC	SHC	PI	TC	SHC	PI	TC	SHC	PI	TC	SHC	PI
1.8+1.8+1.8+1.8+5	16	3960	0	1820	6270	0	1870	7148	0	1949	7733	0	2002	9416	0	2241	11121	0	2271	12133	0	2332	14003	0	2448
	18	3905	0	1845	6215	0	1894	7080	0	1990	7656	0	2054	9317	0	2298	11066	0	2386	12089	0	2435	13948	0	2563
	20	3850	0	1870	6160	0	1919	7018	0	2022	7590	0	2091	9240	0	2337	11000	0	2460	11825	0	2546	13860	0	2681
	22	3795	0	1894	6105	0	1943	6930	0	2064	7480	0	2145	9141	0	2394	10934	0	2558	11957	0	2640	13794	0	2792
	24	3740	0	1919	6050	0	1968	6868	0	2105	7414	0	2197	9064	0	2450	10868	0	2657	11891	0	2740	13596	0	2905
1.8+1.8+1.8+1.8+6	16	3960	0	1820	6270	0	1870	7148	0	1949	7733	0	2002	9416	0	2241	11121	0	2271	12133	0	2332	14003	0	2448
	18	3905	0	1845	6215	0	1894	7080	0	1990	7656	0	2054	9317	0	2298	11066	0	2386	12089	0	2435	13948	0	2563
	20	3850	0	1870	6160	0	1919	7018	0	2022	7590	0	2091	9240	0	2337	11000	0	2460	11825	0	2546	13860	0	2681
	22	3795	0	1894	6105	0	1943	6930	0	2064	7480	0	2145	9141	0	2394	10934	0	2558	11957	0	2640	13794	0	2792
	24	3740	0	1919	6050	0	1968	6868	0	2105	7414	0	2197	9064	0	2450	10868	0	2657	11891	0	2740	13596	0	2905
1.8+1.8+1.8+2.5+2.5	16	3960	0	1820	6270	0	1870	7148	0	1949	7733	0	2002	9416	0	2241	11121	0	2271	12133	0	2332	14003	0	2448
	18	3905	0	1845	6215	0	1894	7080	0	1990	7656	0	2054	9317	0	2298	11066	0	2386	12089	0	2435	13948	0	2563
	20	3850	0	1870	6160	0	1919	7018	0	2022	7590	0	2091	9240	0	2337	11000	0	2460	11825	0	2546	13860	0	2681
	22	3795	0	1894	6105	0	1943	6930	0	2064	7480	0	2145	9141	0	2394	10934	0	2558	11957	0	2640	13794	0	2792
	24	3740	0	1919	6050	0	1968	6868	0	2105	7414	0	2197	9064	0	2450	10868	0	2657	11891	0	2740	13596	0	2905
1.8+1.8+1.8+2.5+3.5	16	3960	0	1820	6270	0	1870	7148	0	1949	7733	0	2002	9416	0	2241	11121	0	2271	12133	0	2332	14003	0	2448
	18	3905	0	1845	6215	0	1894	7080	0	1990	7656	0	2054	9317	0	2298	11066	0	2386	12089	0	2435	13948	0	2563
	20	3850	0	1870	6160	0	1919	7018	0	2022	7590	0	2091	9240	0	2337	11000	0	2460	11825	0	2546	13860	0	2681
	22	3795	0	1894	6105	0	1943	6930	0	2064	7480	0	2145	9141	0	2394	10934	0	2558	11957	0	2640	13794	0	2792
	24	3740	0	1919	6050	0	1968	6868	0	2105	7414	0	2197	9064	0	2450	10868	0	2657	11891	0	2740	13596	0	2905
1.8+1.8+1.8+2.5+5	16	3960	0	1820	6270	0	1870	7148	0	1949	7733	0	2002	9416	0	2241	11121	0	2271	12133	0	2332	14003	0	2448
	18	3905	0	1845	6215	0	1894	7080	0	1990	7656	0	2054	9317	0	2298	11066	0	2386	12089	0	2435	13948	0	2563
	20	3850	0	1870	6160	0	1919	7018	0	2022	7590	0	2091	9240	0	2337	11000	0	2460	11825	0	2546	13860	0	2681
	22	3795	0	1894	6105	0	1943	6930	0	2064	7480	0	2145	9141	0	2394	10934	0	2558	11957	0	2640	13794	0	2792
	24	3740	0	1919	6050	0	1968	6868	0	2105	7414	0	2197	9064	0	2450	10868	0	2657	11891	0	2740	13596	0	2905
1.8+1.8+1.8+2.5+6	16	3960	0	1820	6270	0	1870	7148	0	1949	7733	0	2002	9416	0	2241	11121	0	2271	12133	0	2332	14003	0	2448
	18	3905	0	1845	6215	0	1894	7080	0	1990	7656	0	2054	9317	0	2298	11066	0	2386	12089	0	2435	13948	0	2563
	20	3850	0	1870	6160	0	1919	7018	0	2022	7590	0	2091	9240	0	2337	11000	0	2460	11825	0	2546	13860	0	2681
	22	3795	0	1894	6105	0	1943	6930	0	2064	7480	0	2145	9141	0	2394	10934	0	2558	11957	0	2640	13794	0	2792
	24	3740	0	1919	6050	0	1968	6868	0	2105	7414	0	2197	9064	0	2450	10868	0	2657	11891	0	2740	13596	0	2905
1.8+1.8+1.8+3.5+3.5	16	3960	0	1820	6270	0	1870	7148	0	1949	7733	0	2002	9416	0	2241	11121	0	2271	12133	0	2332	14003	0	2448
	18	3905	0	1845	6215	0	1894	7080	0	1990	7656	0	2054	9317	0	2298	11066	0	2386	12089	0	2435	13948	0	2563
	20	3850	0	1870	6160	0	1919	7018	0	2022	7590	0	2091	9240	0	2337	11000	0	2460	11825	0	2546	13860	0	2681
	22	3795	0	1894	6105	0	1943	6930	0	2064	7480	0	2145	9141	0	2394	10934	0	2558	11957	0	2640	13794	0	2792
	24	3740	0	1919	6050	0	1968	6868	0	2105	7414	0	2197	9064	0	2450	10868	0	2657	11891	0	2740	13596	0	2905
1.8+1.8+1.8+3.5+5	16	3960	0	1820	6270	0	1870	7148	0	1949	7733	0	2002	9416	0	2241	11121	0	2271	12133	0	2332	14003	0	2448
	18	3905	0	1845	6215	0	1894	7080	0	1990	7656	0	2054	9317	0	2298	11066	0	2386	12089	0	2435	13948	0	2563
	20	3850	0	1870	6160	0	1919	7018	0	2022	7590	0	2091	9240	0	2337	11000	0	2460	11825	0	2546	13860	0	2681
	22	3795	0	1894	6105	0	1943	6930	0	2064	7480	0	2145	9141	0	2394	10934	0	2558	11957	0	2640	13794	0	2792
	24	3740	0	1919	6050	0	1968	6868	0	2105	7414	0	2197	9064	0	2450	10868	0	2657	11891	0	2740	13596	0	2905

EWB : Evaporator Wet Bulb temperature (°C)
EDB : Evaporator Dry Bulb temperature (°C)
(°CDB) : Outdoor Unit Inlet Air Dry Temperature (°C)

TC : Total Capacity (W)
SHC : Sensible Heating Capacity (W)
PI : Power Input

	INDOOR	OUTDOOR TEMPERATURE (°CDB)																							
	EDB	-15			-10			-7			-5			0			7			10			15		
	°C	TC	SHC	PI	TC	SHC	PI	TC	SHC	PI	TC	SHC	PI	TC	SHC	PI	TC	SHC	PI	TC	SHC	PI	TC	SHC	PI
1.8+1.8+1.8+3.5+6	16	3960	0	1820	6270	0	1870	7148	0	1949	7733	0	2002	9416	0	2241	11121	0	2271	12133	0	2332	14003	0	2448
	18	3905	0	1845	6215	0	1894	7080	0	1990	7656	0	2054	9317	0	2298	11066	0	2386	12089	0	2435	13948	0	2563
	20	3850	0	1870	6160	0	1919	7018	0	2022	7590	0	2091	9240	0	2337	11000	0	2460	11825	0	2546	13860	0	2681
	22	3795	0	1894	6105	0	1943	6930	0	2064	7480	0	2145	9141	0	2394	10934	0	2558	11957	0	2640	13794	0	2792
	24	3740	0	1919	6050	0	1968	6868	0	2105	7414	0	2197	9064	0	2450	10868	0	2657	11891	0	2740	13596	0	2905
1.8+1.8+1.8+5+5	16	3960	0	1820	6270	0	1870	7148	0	1949	7733	0	2002	9416	0	2241	11121	0	2271	12133	0	2332	14003	0	2448
	18	3905	0	1845	6215	0	1894	7080	0	1990	7656	0	2054	9317	0	2298	11066	0	2386	12089	0	2435	13948	0	2563
	20	3850	0	1870	6160	0	1919	7018	0	2022	7590	0	2091	9240	0	2337	11000	0	2460	11825	0	2546	13860	0	2681
	22	3795	0	1894	6105	0	1943	6930	0	2064	7480	0	2145	9141	0	2394	10934	0	2558	11957	0	2640	13794	0	2792
	24	3740	0	1919	6050	0	1968	6868	0	2105	7414	0	2197	9064	0	2450	10868	0	2657	11891	0	2740	13596	0	2905
1.8+1.8+2.5+2.5+2.5	16	3960	0	1820	6270	0	1870	7148	0	1949	7733	0	2002	9416	0	2241	11121	0	2271	12133	0	2332	14003	0	2448
	18	3905	0	1845	6215	0	1894	7080	0	1990	7656	0	2054	9317	0	2298	11066	0	2386	12089	0	2435	13948	0	2563
	20	3850	0	1870	6160	0	1919	7018	0	2022	7590	0	2091	9240	0	2337	11000	0	2460	11825	0	2546	13860	0	2681
	22	3795	0	1894	6105	0	1943	6930	0	2064	7480	0	2145	9141	0	2394	10934	0	2558	11957	0	2640	13794	0	2792
	24	3740	0	1919	6050	0	1968	6868	0	2105	7414	0	2197	9064	0	2450	10868	0	2657	11891	0	2740	13596	0	2905
1.8+1.8+2.5+2.5+3.5	16	3960	0	1820	6270	0	1870	7148	0	1949	7733	0	2002	9416	0	2241	11121	0	2271	12133	0	2332	14003	0	2448
	18	3905	0	1845	6215	0	1894	7080	0	1990	7656	0	2054	9317	0	2298	11066	0	2386	12089	0	2435	13948	0	2563
	20	3850	0	1870	6160	0	1919	7018	0	2022	7590	0	2091	9240	0	2337	11000	0	2460	11825	0	2546	13860	0	2681
	22	3795	0	1894	6105	0	1943	6930	0	2064	7480	0	2145	9141	0	2394	10934	0	2558	11957	0	2640	13794	0	2792
	24	3740	0	1919	6050	0	1968	6868	0	2105	7414	0	2197	9064	0	2450	10868	0	2657	11891	0	2740	13596	0	2905
1.8+1.8+2.5+2.5+5	16	3960	0	1820	6270	0	1870	7148	0	1949	7733	0	2002	9416	0	2241	11121	0	2271	12133	0	2332	14003	0	2448
	18	3905	0	1845	6215	0	1894	7080	0	1990	7656	0	2054	9317	0	2298	11066	0	2386	12089	0	2435	13948	0	2563
	20	3850	0	1870	6160	0	1919	7018	0	2022	7590	0	2091	9240	0	2337	11000	0	2460	11825	0	2546	13860	0	2681
	22	3795	0	1894	6105	0	1943	6930	0	2064	7480	0	2145	9141	0	2394	10934	0	2558	11957	0	2640	13794	0	2792
	24	3740	0	1919	6050	0	1968	6868	0	2105	7414	0	2197	9064	0	2450	10868	0	2657	11891	0	2740	13596	0	2905
1.8+1.8+2.5+2.5+6	16	3960	0	1820	6270	0	1870	7148	0	1949	7733	0	2002	9416	0	2241	11121	0	2271	12133	0	2332	14003	0	2448
	18	3905	0	1845	6215	0	1894	7080	0	1990	7656	0	2054	9317	0	2298	11066	0	2386	12089	0	2435	13948	0	2563
	20	3850	0	1870	6160	0	1919	7018	0	2022	7590	0	2091	9240	0	2337	11000	0	2460	11825	0	2546	13860	0	2681
	22	3795	0	1894	6105	0	1943	6930	0	2064	7480	0	2145	9141	0	2394	10934	0	2558	11957	0	2640	13794	0	2792
	24	3740	0	1919	6050	0	1968	6868	0	2105	7414	0	2197	9064	0	2450	10868	0	2657	11891	0	2740	13596	0	2905
1.8+1.8+2.5+3.5+3.5	16	3960	0	1820	6270	0	1870	7148	0	1949	7733	0	2002	9416	0	2241	11121	0	2271	12133	0	2332	14003	0	2448
	18	3905	0	1845	6215	0	1894	7080	0	1990	7656	0	2054	9317	0	2298	11066	0	2386	12089	0	2435	13948	0	2563
	20	3850	0	1870	6160	0	1919	7018	0	2022	7590	0	2091	9240	0	2337	11000	0	2460	11825	0	2546	13860	0	2681
	22	3795	0	1894	6105	0	1943	6930	0	2064	7480	0	2145	9141	0	2394	10934	0	2558	11957	0	2640	13794	0	2792
	24	3740	0	1919	6050	0	1968	6868	0	2105	7414	0	2197	9064	0	2450	10868	0	2657	11891	0	2740	13596	0	2905
1.8+1.8+2.5+3.5+5	16	3960	0	1820	6270	0	1870	7148	0	1949	7733	0	2002	9416	0	2241	11121	0	2271	12133	0	2332	14003	0	2448
	18	3905	0	1845	6215	0	1894	7080	0	1990	7656	0	2054	9317	0	2298	11066	0	2386	12089	0	2435	13948	0	2563
	20	3850	0	1870	6160	0	1919	7018	0	2022	7590	0	2091	9240	0	2337	11000	0	2460	11825	0	2546	13860	0	2681
	22	3795	0	1894	6105	0	1943	6930	0	2064	7480	0	2145	9141	0	2394	10934	0	2558	11957	0	2640	13794	0	2792
	24	3740	0	1919	6050	0	1968	6868	0	2105	7414	0	2197	9064	0	2450	10868	0	2657	11891	0	2740	13596	0	2905

EWB : Evaporator Wet Bulb temperature (°C)
EDB : Evaporator Dry Bulb temperature (°C)
(°CDB) : Outdoor Unit Inlet Air Dry Temperature (°C)

TC : Total Capacity (W)
SHC : Sensible Heating Capacity (W)
PI : Power Input

	INDOOR	OUTDOOR TEMPERATURE (°CDB)																							
	EDB	-15			-10			-7			-5			0			7			10			15		
	°C	TC	SHC	PI	TC	SHC	PI	TC	SHC	PI	TC	SHC	PI	TC	SHC	PI	TC	SHC	PI	TC	SHC	PI	TC	SHC	PI
1.8+1.8+3.5+3.5+3.5	16	3960	0	1820	6270	0	1870	7148	0	1949	7733	0	2002	9416	0	2241	11121	0	2271	12133	0	2332	14003	0	2448
	18	3905	0	1845	6215	0	1894	7080	0	1990	7656	0	2054	9317	0	2298	11066	0	2386	12089	0	2435	13948	0	2563
	20	3850	0	1870	6160	0	1919	7018	0	2022	7590	0	2091	9240	0	2337	11000	0	2460	11825	0	2546	13860	0	2681
	22	3795	0	1894	6105	0	1943	6930	0	2064	7480	0	2145	9141	0	2394	10934	0	2558	11957	0	2640	13794	0	2792
	24	3740	0	1919	6050	0	1968	6868	0	2105	7414	0	2197	9064	0	2450	10868	0	2657	11891	0	2740	13596	0	2905
1.8+2.5+2.5+2.5+2.5	16	3960	0	1820	6270	0	1870	7148	0	1949	7733	0	2002	9416	0	2241	11121	0	2271	12133	0	2332	14003	0	2448
	18	3905	0	1845	6215	0	1894	7080	0	1990	7656	0	2054	9317	0	2298	11066	0	2386	12089	0	2435	13948	0	2563
	20	3850	0	1870	6160	0	1919	7018	0	2022	7590	0	2091	9240	0	2337	11000	0	2460	11825	0	2546	13860	0	2681
	22	3795	0	1894	6105	0	1943	6930	0	2064	7480	0	2145	9141	0	2394	10934	0	2558	11957	0	2640	13794	0	2792
	24	3740	0	1919	6050	0	1968	6868	0	2105	7414	0	2197	9064	0	2450	10868	0	2657	11891	0	2740	13596	0	2905
1.8+2.5+2.5+2.5+3.5	16	3960	0	1820	6270	0	1870	7148	0	1949	7733	0	2002	9416	0	2241	11121	0	2271	12133	0	2332	14003	0	2448
	18	3905	0	1845	6215	0	1894	7080	0	1990	7656	0	2054	9317	0	2298	11066	0	2386	12089	0	2435	13948	0	2563
	20	3850	0	1870	6160	0	1919	7018	0	2022	7590	0	2091	9240	0	2337	11000	0	2460	11825	0	2546	13860	0	2681
	22	3795	0	1894	6105	0	1943	6930	0	2064	7480	0	2145	9141	0	2394	10934	0	2558	11957	0	2640	13794	0	2792
	24	3740	0	1919	6050	0	1968	6868	0	2105	7414	0	2197	9064	0	2450	10868	0	2657	11891	0	2740	13596	0	2905
1.8+2.5+2.5+2.5+5	16	3960	0	1820	6270	0	1870	7148	0	1949	7733	0	2002	9416	0	2241	11121	0	2271	12133	0	2332	14003	0	2448
	18	3905	0	1845	6215	0	1894	7080	0	1990	7656	0	2054	9317	0	2298	11066	0	2386	12089	0	2435	13948	0	2563
	20	3850	0	1870	6160	0	1919	7018	0	2022	7590	0	2091	9240	0	2337	11000	0	2460	11825	0	2546	13860	0	2681
	22	3795	0	1894	6105	0	1943	6930	0	2064	7480	0	2145	9141	0	2394	10934	0	2558	11957	0	2640	13794	0	2792
	24	3740	0	1919	6050	0	1968	6868	0	2105	7414	0	2197	9064	0	2450	10868	0	2657	11891	0	2740	13596	0	2905
1.8+2.5+2.5+2.5+6	16	3960	0	1820	6270	0	1870	7148	0	1949	7733	0	2002	9416	0	2241	11121	0	2271	12133	0	2332	14003	0	2448
	18	3905	0	1845	6215	0	1894	7080	0	1990	7656	0	2054	9317	0	2298	11066	0	2386	12089	0	2435	13948	0	2563
	20	3850	0	1870	6160	0	1919	7018	0	2022	7590	0	2091	9240	0	2337	11000	0	2460	11825	0	2546	13860	0	2681
	22	3795	0	1894	6105	0	1943	6930	0	2064	7480	0	2145	9141	0	2394	10934	0	2558	11957	0	2640	13794	0	2792
	24	3740	0	1919	6050	0	1968	6868	0	2105	7414	0	2197	9064	0	2450	10868	0	2657	11891	0	2740	13596	0	2905
1.8+2.5+2.5+3.5+3.5	16	3960	0	1820	6270	0	1870	7148	0	1949	7733	0	2002	9416	0	2241	11121	0	2271	12133	0	2332	14003	0	2448
	18	3905	0	1845	6215	0	1894	7080	0	1990	7656	0	2054	9317	0	2298	11066	0	2386	12089	0	2435	13948	0	2563
	20	3850	0	1870	6160	0	1919	7018	0	2022	7590	0	2091	9240	0	2337	11000	0	2460	11825	0	2546	13860	0	2681
	22	3795	0	1894	6105	0	1943	6930	0	2064	7480	0	2145	9141	0	2394	10934	0	2558	11957	0	2640	13794	0	2792
	24	3740	0	1919	6050	0	1968	6868	0	2105	7414	0	2197	9064	0	2450	10868	0	2657	11891	0	2740	13596	0	2905
1.8+2.5+2.5+3.5+5	16	3960	0	1820	6270	0	1870	7148	0	1949	7733	0	2002	9416	0	2241	11121	0	2271	12133	0	2332	14003	0	2448
	18	3905	0	1845	6215	0	1894	7080	0	1990	7656	0	2054	9317	0	2298	11066	0	2386	12089	0	2435	13948	0	2563
	20	3850	0	1870	6160	0	1919	7018	0	2022	7590	0	2091	9240	0	2337	11000	0	2460	11825	0	2546	13860	0	2681
	22	3795	0	1894	6105	0	1943	6930	0	2064	7480	0	2145	9141	0	2394	10934	0	2558	11957	0	2640	13794	0	2792
	24	3740	0	1919	6050	0	1968	6868	0	2105	7414	0	2197	9064	0	2450	10868	0	2657	11891	0	2740	13596	0	2905
1.8+2.5+3.5+3.5+3.5	16	3960	0	1820	6270	0	1870	7148	0	1949	7733	0	2002	9416	0	2241	11121	0	2271	12133	0	2332	14003	0	2448
	18	3905	0	1845	6215	0	1894	7080	0	1990	7656	0	2054	9317	0	2298	11066	0	2386	12089	0	2435	13948	0	2563
	20	3850	0	1870	6160	0	1919	7018	0	2022	7590	0	2091	9240	0	2337	11000	0	2460	11825	0	2546	13860	0	2681
	22	3795	0	1894	6105	0	1943	6930	0	2064	7480	0	2145	9141	0	2394	10934	0	2558	11957	0	2640	13794	0	2792
	24	3740	0	1919	6050	0	1968	6868	0	2105	7414	0	2197	9064	0	2450	10868	0	2657	11891	0	2740	13596	0	2905

EWB : Evaporator Wet Bulb temperature (°C)
EDB : Evaporator Dry Bulb temperature (°C)
(°CDB) : Outdoor Unit Inlet Air Dry Temperature (°C)

TC : Total Capacity (W)
SHC : Sensible Heating Capacity (W)
PI : Power Input

	INDOOR	OUTDOOR TEMPERATURE (°CDB)																							
	EDB	-15			-10			-7			-5			0			7			10			15		
	°C	TC	SHC	PI	TC	SHC	PI	TC	SHC	PI	TC	SHC	PI	TC	SHC	PI	TC	SHC	PI	TC	SHC	PI	TC	SHC	PI
2.5+2.5+2.5+2.5+2.5	16	3960	0	1820	6270	0	1870	7148	0	1949	7733	0	2002	9416	0	2241	11121	0	2271	12133	0	2332	14003	0	2448
	18	3905	0	1845	6215	0	1894	7080	0	1990	7656	0	2054	9317	0	2298	11066	0	2386	12089	0	2435	13948	0	2563
	20	3850	0	1870	6160	0	1919	7018	0	2022	7590	0	2091	9240	0	2337	11000	0	2460	11825	0	2546	13860	0	2681
	22	3795	0	1894	6105	0	1943	6930	0	2064	7480	0	2145	9141	0	2394	10934	0	2558	11957	0	2640	13794	0	2792
	24	3740	0	1919	6050	0	1968	6868	0	2105	7414	0	2197	9064	0	2450	10868	0	2657	11891	0	2740	13596	0	2905
2.5+2.5+2.5+2.5+3.5	16	3960	0	1820	6270	0	1870	7148	0	1949	7733	0	2002	9416	0	2241	11121	0	2271	12133	0	2332	14003	0	2448
	18	3905	0	1845	6215	0	1894	7080	0	1990	7656	0	2054	9317	0	2298	11066	0	2386	12089	0	2435	13948	0	2563
	20	3850	0	1870	6160	0	1919	7018	0	2022	7590	0	2091	9240	0	2337	11000	0	2460	11825	0	2546	13860	0	2681
	22	3795	0	1894	6105	0	1943	6930	0	2064	7480	0	2145	9141	0	2394	10934	0	2558	11957	0	2640	13794	0	2792
	24	3740	0	1919	6050	0	1968	6868	0	2105	7414	0	2197	9064	0	2450	10868	0	2657	11891	0	2740	13596	0	2905
2.5+2.5+2.5+2.5+5	16	3960	0	1820	6270	0	1870	7148	0	1949	7733	0	2002	9416	0	2241	11121	0	2271	12133	0	2332	14003	0	2448
	18	3905	0	1845	6215	0	1894	7080	0	1990	7656	0	2054	9317	0	2298	11066	0	2386	12089	0	2435	13948	0	2563
	20	3850	0	1870	6160	0	1919	7018	0	2022	7590	0	2091	9240	0	2337	11000	0	2460	11825	0	2546	13860	0	2681
	22	3795	0	1894	6105	0	1943	6930	0	2064	7480	0	2145	9141	0	2394	10934	0	2558	11957	0	2640	13794	0	2792
	24	3740	0	1919	6050	0	1968	6868	0	2105	7414	0	2197	9064	0	2450	10868	0	2657	11891	0	2740	13596	0	2905
2.5+2.5+2.5+3.5+3.5	16	3960	0	1820	6270	0	1870	7148	0	1949	7733	0	2002	9416	0	2241	11121	0	2271	12133	0	2332	14003	0	2448
	18	3905	0	1845	6215	0	1894	7080	0	1990	7656	0	2054	9317	0	2298	11066	0	2386	12089	0	2435	13948	0	2563
	20	3850	0	1870	6160	0	1919	7018	0	2022	7590	0	2091	9240	0	2337	11000	0	2460	11825	0	2546	13860	0	2681
	22	3795	0	1894	6105	0	1943	6930	0	2064	7480	0	2145	9141	0	2394	10934	0	2558	11957	0	2640	13794	0	2792
	24	3740	0	1919	6050	0	1968	6868	0	2105	7414	0	2197	9064	0	2450	10868	0	2657	11891	0	2740	13596	0	2905
2.5+2.5+3.5+3.5+3.5	16	3960	0	1820	6270	0	1870	7148	0	1949	7733	0	2002	9416	0	2241	11121	0	2271	12133	0	2332	14003	0	2448
	18	3905	0	1845	6215	0	1894	7080	0	1990	7656	0	2054	9317	0	2298	11066	0	2386	12089	0	2435	13948	0	2563
	20	3850	0	1870	6160	0	1919	7018	0	2022	7590	0	2091	9240	0	2337	11000	0	2460	11825	0	2546	13860	0	2681
	22	3795	0	1894	6105	0	1943	6930	0	2064	7480	0	2145	9141	0	2394	10934	0	2558	11957	0	2640	13794	0	2792
	24	3740	0	1919	6050	0	1968	6868	0	2105	7414	0	2197	9064	0	2450	10868	0	2657	11891	0	2740	13596	0	2905

EWB : Evaporator Wet Bulb temperature (°C)
EDB : Evaporator Dry Bulb temperature (°C)
(°CDB) : Outdoor Unit Inlet Air Dry Temperature (°C)

TC : Total Capacity (W)
SHC : Sensible Heating Capacity (W)
PI : Power Input

4.2.13. RAM-130NP6A

COOLING [50Hz, 230V]

	INDOOR		OUTDOOR TEMPERATURE (°CDB)																				
	EWB	EDB	-10			21			27			32			35			40			43		
	°C	°C	TC	SHC	PI	TC	SHC	PI	TC	SHC	PI	TC	SHC	PI	TC	SHC	PI	TC	SHC	PI	TC	SHC	PI
RAM-130NP6A	12.0	18	14029	8999	3186	10111	7635	2407	9358	7048	2837	10332	7826	3671	9954	7482	3830	9324	7052	4110	8946	6708	4269
	14.0	20	14029	8999	3186	10864	7635	2407	10111	7121	2871	11088	7826	3711	10710	7568	3870	9954	7052	4150	9576	6794	4349
	16.0	22	14029	9575	3236	11617	7635	2439	10756	7121	2904	11844	7826	3751	11466	7568	3950	10710	7052	4229	10332	6794	4389
	18.0	25	15043	10268	3285	12370	8296	2471	11401	7709	2937	12600	8514	3791	12096	8170	3950	11340	7654	4269	10836	7310	4429
	19.0	27	15550	10614	3335	12800	8736	2502	11832	8076	2971	13104	8944	3830	12600	8600	3990	11844	8084	4269	11340	7740	4429
	22.0	30	17240	10498	3335	14198	8663	2502	13122	8002	2971	14490	8858	3870	13986	8514	4030	12600	8256	4429	11718	8084	4668
	24.0	32	18424	10498	3385	15166	8663	2534	13983	8002	3004	15498	8858	3870	14868	8514	4070	13104	8428	4549	11970	8342	4828
1.20	12.0	18	1336	917	295	963	778	223	891	718	263	984	797	340	948	762	355	888	718	381	852	683	396
	14.0	20	1336	917	295	1035	778	223	963	725	266	1056	797	344	1020	771	359	948	718	385	912	692	403
	16.0	22	1336	975	300	1106	778	226	1024	725	269	1128	797	348	1092	771	366	1020	718	392	984	692	407
	18.0	25	1433	1046	305	1178	845	229	1086	785	272	1200	867	352	1152	832	366	1080	780	396	1032	745	411
	19.0	27	1481	1081	309	1219	890	232	1127	823	275	1248	911	355	1200	876	370	1128	823	396	1080	788	411
	22.0	30	1642	1069	309	1352	882	232	1250	815	275	1380	902	359	1332	867	374	1200	841	411	1116	823	433
	24.0	32	1755	1069	314	1444	882	235	1332	815	279	1476	902	359	1416	867	377	1248	858	422	1140	850	448
1.8	12.0	18	2004	1375	447	1444	1167	338	1337	1077	398	1476	1196	515	1422	1143	538	1332	1077	577	1278	1025	599
	14.0	20	2004	1375	447	1552	1167	338	1444	1088	403	1584	1196	521	1530	1156	543	1422	1077	582	1368	1038	610
	16.0	22	2004	1463	454	1660	1167	342	1537	1088	408	1692	1196	526	1638	1156	554	1530	1077	594	1476	1038	616
	18.0	25	2149	1569	461	1767	1268	347	1629	1178	412	1800	1301	532	1728	1248	554	1620	1169	599	1548	1117	622
	19.0	27	2221	1622	468	1829	1335	351	1690	1234	417	1872	1367	538	1800	1314	560	1692	1235	599	1620	1183	622
	22.0	30	2463	1604	468	2028	1324	351	1875	1223	417	2070	1353	543	1998	1301	566	1800	1261	622	1674	1235	655
	24.0	32	2632	1604	475	2167	1324	356	1998	1223	422	2214	1353	543	2124	1301	571	1872	1288	638	1710	1275	678
2.5	12.0	18	2784	1910	623	2006	1620	471	1857	1496	555	2050	1661	718	1975	1588	749	1850	1497	803	1775	1424	835
	14.0	20	2784	1910	623	2155	1620	471	2006	1511	561	2200	1661	725	2125	1606	757	1975	1497	811	1900	1442	850
	16.0	22	2784	2032	633	2305	1620	477	2134	1511	568	2350	1661	733	2275	1606	772	2125	1497	827	2050	1442	858
	18.0	25	2985	2179	642	2454	1760	483	2262	1636	574	2500	1807	741	2400	1734	772	2250	1624	835	2150	1551	866
	19.0	27	3085	2252	652	2540	1854	489	2348	1714	581	2600	1898	749	2500	1825	780	2350	1716	835	2250	1643	866
	22.0	30	3421	2228	652	2817	1838	489	2604	1698	581	2875	1880	757	2775	1807	788	2500	1752	866	2325	1716	913
	24.0	32	3655	2228	662	3009	1838	495	2774	1698	587	3075	1880	757	2950	1807	796	2600	1789	889	2375	1770	944
3.5	12.0	18	3897	2673	926	2809	2268	700	2599	2094	825	2870	2325	1067	2765	2223	1114	2590	2095	1195	2485	1993	1241
	14.0	20	3897	2673	926	3018	2268	700	2809	2116	835	3080	2325	1079	2975	2248	1125	2765	2095	1206	2660	2018	1264
	16.0	22	3897	2845	941	3227	2268	709	2988	2116	844	3290	2325	1090	3185	2248	1148	2975	2095	1230	2870	2018	1276
	18.0	25	4179	3050	955	3436	2465	718	3167	2290	854	3500	2529	1102	3360	2427	1148	3150	2274	1241	3010	2172	1288
	19.0	27	4320	3153	970	3555	2596	728	3287	2399	864	3640	2657	1114	3500	2555	1160	3290	2402	1241	3150	2300	1288
	22.0	30	4789	3119	970	3944	2574	728	3645	2377	864	4025	2632	1125	3885	2529	1172	3500	2453	1288	3255	2402	1357
	24.0	32	5118	3119	984	4213	2574	737	3884	2377	873	4305	2632	1125	4130	2529	1183	3640	2504	1322	3325	2478	1404
5	12.0	18	5567	3819	1421	4012	3240	1074	3713	2991	1266	4100	3322	1638	3950	3176	1709	3700	2993	1833	3550	2847	1905
	14.0	20	5567	3819	1421	4311	3240	1074	4012	3022	1281	4400	3322	1655	4250	3212	1727	3950	2993	1851	3800	2884	1940
	16.0	22	5567	4064	1443	4610	3240	1088	4268	3022	1296	4700	3322	1673	4550	3212	1762	4250	2993	1887	4100	2884	1958
	18.0	25	5970	4358	1466	4909	3521	1102	4524	3272	1310	5000	3614	1691	4800	3468	1762	4500	3249	1905	4300	3103	1976
	19.0	27	6171	4505	1488	5079	3708	1116	4695	3427	1325	5200	3796	1709	5000	3650	1780	4700	3431	1905	4500	3285	1976
	22.0	30	6841	4456	1488	5634	3677	1116	5207	3396	1325	5750	3760	1727	5550	3614	1798	5000	3504	1976	4650	3431	2083
	24.0	32	7311	4456	1510	6018	3677	1131	5549	3396	1340	6150	3760	1727	5900	3614	1816	5200	3577	2029	4750	3541	2154

	INDOOR		OUTDOOR TEMPERATURE (°CDB)																				
	EWB	EDB	-10			21			27			32			35			40			43		
	°C	°C	TC	SHC	PI	TC	SHC	PI	TC	SHC	PI	TC	SHC	PI	TC	SHC	PI	TC	SHC	PI	TC	SHC	PI
1.2+1.2	12.0	18	2672	1833	551	1926	1555	416	1782	1436	491	1968	1594	635	1896	1524	662	1776	1437	711	1704	1367	738
	14.0	20	2672	1833	551	2069	1555	416	1926	1451	496	2112	1594	642	2040	1542	669	1896	1437	718	1824	1384	752
	16.0	22	2672	1951	560	2213	1555	422	2049	1451	502	2256	1594	649	2184	1542	683	2040	1437	731	1968	1384	759
	18.0	25	2865	2092	568	2356	1690	427	2172	1570	508	2400	1734	656	2304	1664	683	2160	1559	738	2064	1489	766
	19.0	27	2962	2162	577	2438	1780	433	2254	1645	514	2496	1822	662	2400	1752	690	2256	1647	738	2160	1577	766
	22.0	30	3284	2139	577	2704	1765	433	2500	1630	514	2760	1805	669	2664	1734	697	2400	1682	766	2232	1647	807
	24.0	32	3509	2139	585	2889	1765	438	2663	1630	520	2952	1805	669	2832	1734	704	2496	1717	787	2280	1699	835
1.2+1.8	12.0	18	3340	2291	735	2407	1944	555	2228	1795	654	2460	1993	846	2370	1905	883	2220	1796	948	2130	1708	984
	14.0	20	3340	2291	735	2587	1944	555	2407	1813	662	2640	1993	856	2550	1927	892	2370	1796	957	2280	1730	1003
	16.0	22	3340	2438	746	2766	1944	562	2561	1813	670	2820	1993	865	2730	1927	911	2550	1796	975	2460	1730	1012
	18.0	25	3582	2615	758	2945	2113	570	2715	1963	677	3000	2168	874	2880	2081	911	2700	1949	984	2580	1862	1021
	19.0	27	3702	2703	769	3048	2225	577	2817	2056	685	3120	2278	883	3000	2190	920	2820	2059	984	2700	1971	1021
	22.0	30	4105	2673	769	3380	2206	577	3124	2038	685	3450	2256	892	3330	2168	929	3000	2102	1021	2790	2059	1076
	24.0	32	4387	2673	780	3611	2206	584	3329	2038	693	3690	2256	892	3540	2168	938	3120	2146	1049	2850	2124	1113
1.2+2.5	12.0	18	4120	2826	966	2969	2398	730	2748	2214	860	3034	2458	1113	2923	2350	1162	2738	2215	1246	2627	2107	1295
	14.0	20	4120	2826	966	3190	2398	730	2969	2237	871	3256	2458	1125	3145	2377	1174	2923	2215	1258	2812	2134	1319
	16.0	22	4120	3007	981	3411	2398	740	3159	2237	881	3478	2458	1137	3367	2377	1198	3145	2215	1283	3034	2134	1331
	18.0	25	4417	3225	996	3632	2605	749	3348	2421	891	3700	2674	1150	3552	2566	1198	3330	2404	1295	3182	2296	1343
	19.0	27	4566	3333	1011	3759	2744	759	3474	2536	901	3848	2809	1162	3700	2701	1210	3478	2539	1295	3330	2431	1343
	22.0	30	5063	3297	1011	4169	2721	759	3853	2513	901	4255	2782	1174	4107	2674	1222	3700	2593	1343	3441	2539	1416
	24.0	32	5410	3297	1026	4454	2721	768	4106	2513	911	4551	2782	1174	4366	2674	1234	3848	2647	1379	3515	2620	1464
1.2+3.5	12.0	18	5233	3590	1158	3771	3046	875	3491	2812	1031	3854	3122	1334	3713	2985	1392	3478	2813	1494	3337	2676	1552
	14.0	20	5233	3590	1158	4052	3046	875	3771	2841	1043	4136	3122	1349	3995	3019	1407	3713	2813	1508	3572	2710	1581
	16.0	22	5233	3820	1176	4333	3046	886	4012	2841	1055	4418	3122	1363	4277	3019	1436	3995	2813	1537	3854	2710	1595
	18.0	25	5611	4096	1194	4614	3310	898	4253	3075	1067	4700	3397	1378	4512	3259	1436	4230	3054	1552	4042	2916	1610
	19.0	27	5800	4234	1212	4775	3485	909	4413	3222	1080	4888	3568	1392	4700	3431	1450	4418	3225	1552	4230	3088	1610
	22.0	30	6431	4188	1212	5296	3456	909	4895	3193	1080	5405	3534	1407	5217	3397	1465	4700	3294	1610	4371	3225	1697
	24.0	32	6872	4188	1230	5657	3456	921	5216	3193	1092	5781	3534	1407	5546	3397	1479	4888	3362	1653	4465	3328	1755
1.2+5	12.0	18	6903	4736	1397	4975	4018	1056	4605	3709	1244	5084	4119	1610	4898	3938	1680	4588	3711	1803	4402	3530	1873
	14.0	20	6903	4736	1397	5346	4018	1056	4975	3748	1259	5456	4119	1628	5270	3983	1698	4898	3711	1820	4712	3576	1908
	16.0	22	6903	5039	1419	5716	4018	1070	5293	3748	1274	5828	4119	1645	5642	3983	1733	5270	3711	1855	5084	3576	1925
	18.0	25	7402	5404	1441	6087	4366	1084	5610	4057	1288	6200	4481	1663	5952	4300	1733	5580	4028	1873	5332	3847	1943
	19.0	27	7652	5586	1463	6298	4598	1098	5822	4250	1303	6448	4707	1680	6200	4526	1750	5828	4254	1873	5580	4073	1943
	22.0	30	8483	5525	1463	6986	4559	1098	6457	4211	1303	7130	4662	1698	6882	4481	1768	6200	4345	1943	5766	4254	2048
	24.0	32	9066	5525	1485	7463	4559	1111	6880	4211	1318	7626	4662	1698	7316	4481	1785	6448	4435	1995	5890	4390	2118
1.8+1.8	12.0	18	4008	2750	950	2889	2333	718	2674	2154	846	2952	2391	1095	2844	2286	1142	2664	2155	1226	2556	2050	1273
	14.0	20	4008	2750	950	3104	2333	718	2889	2176	856	3168	2391	1107	3060	2313	1154	2844	2155	1238	2736	2076	1297
	16.0	22	4008	2926	965	3319	2333	727	3073	2176	866	3384	2391	1119	3276	2313	1178	3060	2155	1261	2952	2076	1309
	18.0	25	4298	3138	980	3534	2535	737	3258	2356	876	3600	2602	1131	3456	2497	1178	3240	2339	1273	3096	2234	1321
	19.0	27	4443	3243	995	3657	2670	746	3380	2468	886	3744	2733	1142	3600	2628	1190	3384	2470	1273	3240	2365	1321
	22.0	30	4926	3208	995	4057	2647	746	3749	2445	886	4140	2707	1154	3996	2602	1202	3600	2523	1321	3348	2470	1392
	24.0	32	5264	3208	1010	4333	2647	756	3995	2445	896	4428	2707	1154	4248	2602	1214	3744	2575	1357	3420	2549	1440
1.8+2.5	12.0	18	4676	3208	1046	3370	2722	790	3119	2513	932	3444	2790	1205	3318	2667	1258	3108	2514	1349	2982	2391	1402
	14.0	20	4676	3208	1046	3621	2722	790	3370	2539	942	3696	2790	1218	3570	2698	1271	3318	2514	1362	3192	2422	1428
	16.0	22	4676	3414	1062	3872	2722	801	3585	2539	953	3948	2790	1231	3822	2698	1297	3570	2514	1389	3444	2422	1441
	18.0	25	5014	3661	1079	4123	2958	811	3800	2748	964	4200	3035	1245	4032	2913	1297	3780	2729	1402	3612	2606	1454
	19.0	27	5183	3784	1095	4267	3115	822	3944	2879	975	4368	3189	1258	4200	3066	1310	3948	2882	1402	3780	2759	1454
	22.0	30	5747	3743	1095	4733	3088	822	4374	2853	975	4830	3158	1271	4662	3035	1323	4200	2943	1454	3906	2882	1533
	24.0	32	6141	3743	1111	5055	3088	832	4661	2853	986	5166	3158	1271	4956	3035	1336	4368	3005	1493	3990	2974	1585

	INDOOR		OUTDOOR TEMPERATURE (°CDB)																				
	EWB	EDB	-10			21			27			32			35			40			43		
	°C	°C	TC	SHC	PI	TC	SHC	PI	TC	SHC	PI	TC	SHC	PI	TC	SHC	PI	TC	SHC	PI	TC	SHC	PI
1.8+3.5	12.0	18	5567	3819	1317	4012	3240	996	3713	2991	1173	4100	3322	1518	3950	3176	1584	3700	2993	1700	3550	2847	1766
	14.0	20	5567	3819	1317	4311	3240	996	4012	3022	1187	4400	3322	1535	4250	3212	1601	3950	2993	1716	3800	2884	1799
	16.0	22	5567	4064	1338	4610	3240	1009	4268	3022	1201	4700	3322	1551	4550	3212	1634	4250	2993	1749	4100	2884	1815
	18.0	25	5970	4358	1359	4909	3521	1022	4524	3272	1215	5000	3614	1568	4800	3468	1634	4500	3249	1766	4300	3103	1832
	19.0	27	6171	4505	1379	5079	3708	1035	4695	3427	1229	5200	3796	1584	5000	3650	1650	4700	3431	1766	4500	3285	1832
	22.0	30	6841	4456	1379	5634	3677	1035	5207	3396	1229	5750	3760	1601	5550	3614	1667	5000	3504	1832	4650	3431	1931
	24.0	32	7311	4456	1400	6018	3677	1048	5549	3396	1242	6150	3760	1601	5900	3614	1683	5200	3577	1881	4750	3541	1997
1.8+5	12.0	18	6012	4125	1433	4333	3500	1083	4010	3231	1276	4428	3587	1651	4266	3430	1723	3996	3232	1849	3834	3075	1921
	14.0	20	6012	4125	1433	4656	3500	1083	4333	3264	1291	4752	3587	1669	4590	3469	1741	4266	3232	1867	4104	3114	1957
	16.0	22	6012	4389	1456	4979	3500	1097	4610	3264	1306	5076	3587	1687	4914	3469	1777	4590	3232	1903	4428	3114	1975
	18.0	25	6447	4706	1478	5301	3803	1112	4886	3533	1321	5400	3903	1705	5184	3745	1777	4860	3508	1921	4644	3351	1992
	19.0	27	6664	4865	1500	5486	4004	1126	5071	3702	1336	5616	4100	1723	5400	3942	1795	5076	3705	1921	4860	3548	1992
	22.0	30	7389	4812	1500	6085	3971	1126	5624	3668	1336	6210	4060	1741	5994	3903	1813	5400	3784	1992	5022	3705	2100
	24.0	32	7896	4812	1523	6500	3971	1140	5993	3668	1352	6642	4060	1741	6372	3903	1831	5616	3863	2046	5130	3824	2172
2.5+2.5	12.0	18	5567	3819	1317	4012	3240	996	3713	2991	1173	4100	3322	1518	3950	3176	1584	3700	2993	1700	3550	2847	1766
	14.0	20	5567	3819	1317	4311	3240	996	4012	3022	1187	4400	3322	1535	4250	3212	1601	3950	2993	1716	3800	2884	1799
	16.0	22	5567	4064	1338	4610	3240	1009	4268	3022	1201	4700	3322	1551	4550	3212	1634	4250	2993	1749	4100	2884	1815
	18.0	25	5970	4358	1359	4909	3521	1022	4524	3272	1215	5000	3614	1568	4800	3468	1634	4500	3249	1766	4300	3103	1832
	19.0	27	6171	4505	1379	5079	3708	1035	4695	3427	1229	5200	3796	1584	5000	3650	1650	4700	3431	1766	4500	3285	1832
	22.0	30	6841	4456	1379	5634	3677	1035	5207	3396	1229	5750	3760	1601	5550	3614	1667	5000	3504	1832	4650	3431	1931
	24.0	32	7311	4456	1400	6018	3677	1048	5549	3396	1242	6150	3760	1601	5900	3614	1683	5200	3577	1881	4750	3541	1997
2.5+3.5	12.0	18	5790	3972	1381	4173	3370	1044	3862	3111	1230	4264	3454	1592	4108	3303	1661	3848	3113	1782	3692	2961	1851
	14.0	20	5790	3972	1381	4483	3370	1044	4173	3143	1245	4576	3454	1609	4420	3340	1678	4108	3113	1799	3952	2999	1886
	16.0	22	5790	4227	1403	4794	3370	1058	4439	3143	1259	4888	3454	1626	4732	3340	1713	4420	3113	1834	4264	2999	1903
	18.0	25	6208	4532	1424	5105	3662	1071	4705	3403	1274	5200	3758	1644	4992	3606	1713	4680	3378	1851	4472	3227	1920
	19.0	27	6418	4685	1446	5282	3856	1085	4883	3565	1288	5408	3948	1661	5200	3796	1730	4888	3568	1851	4680	3416	1920
	22.0	30	7115	4634	1446	5860	3824	1085	5416	3532	1288	5980	3910	1678	5772	3758	1747	5200	3644	1920	4836	3568	2024
	24.0	32	7603	4634	1468	6259	3824	1099	5771	3532	1303	6396	3910	1678	6136	3758	1765	5408	3720	1972	4940	3682	2093
3.5+3.5	12.0	18	6012	4125	1433	4333	3500	1083	4010	3231	1276	4428	3587	1651	4266	3430	1723	3996	3232	1849	3834	3075	1921
	14.0	20	6012	4125	1433	4656	3500	1083	4333	3264	1291	4752	3587	1669	4590	3469	1741	4266	3232	1867	4104	3114	1957
	16.0	22	6012	4389	1456	4979	3500	1097	4610	3264	1306	5076	3587	1687	4914	3469	1777	4590	3232	1903	4428	3114	1975
	18.0	25	6447	4706	1478	5301	3803	1112	4886	3533	1321	5400	3903	1705	5184	3745	1777	4860	3508	1921	4644	3351	1992
	19.0	27	6664	4865	1500	5486	4004	1126	5071	3702	1336	5616	4100	1723	5400	3942	1795	5076	3705	1921	4860	3548	1992
	22.0	30	7389	4812	1500	6085	3971	1126	5624	3668	1336	6210	4060	1741	5994	3903	1813	5400	3784	1992	5022	3705	2100
	24.0	32	7896	4812	1523	6500	3971	1140	5993	3668	1352	6642	4060	1741	6372	3903	1831	5616	3863	2046	5130	3824	2172
2.5+5	12.0	18	6012	4125	1433	4333	3500	1083	4010	3231	1276	4428	3587	1651	4266	3430	1723	3996	3232	1849	3834	3075	1921
	14.0	20	6012	4125	1433	4656	3500	1083	4333	3264	1291	4752	3587	1669	4590	3469	1741	4266	3232	1867	4104	3114	1957
	16.0	22	6012	4389	1456	4979	3500	1097	4610	3264	1306	5076	3587	1687	4914	3469	1777	4590	3232	1903	4428	3114	1975
	18.0	25	6447	4706	1478	5301	3803	1112	4886	3533	1321	5400	3903	1705	5184	3745	1777	4860	3508	1921	4644	3351	1992
	19.0	27	6664	4865	1500	5486	4004	1126	5071	3702	1336	5616	4100	1723	5400	3942	1795	5076	3705	1921	4860	3548	1992
	22.0	30	7389	4812	1500	6085	3971	1126	5624	3668	1336	6210	4060	1741	5994	3903	1813	5400	3784	1992	5022	3705	2100
	24.0	32	7896	4812	1523	6500	3971	1140	5993	3668	1352	6642	4060	1741	6372	3903	1831	5616	3863	2046	5130	3824	2172
3.5+5	12.0	18	6680	4583	1593	4815	3889	1204	4456	3589	1419	4920	3986	1835	4740	3811	1915	4440	3592	2055	4260	3416	2135
	14.0	20	6680	4583	1593	5173	3889	1204	4815	3627	1435	5280	3986	1855	5100	3854	1935	4740	3592	2075	4560	3460	2175
	16.0	22	6680	4877	1618	5532	3889	1220	5122	3627	1452	5640	3986	1875	5460	3854	1975	5100	3592	2115	4920	3460	2195
	18.0	25	7163	5229	1643	5890	4225	1235	5429	3926	1469	6000	4336	1895	5760	4161	1975	5400	3898	2135	5160	3723	2214
	19.0	27	7405	5406	1668	6095	4449	1251	5634	4113	1485	6240	4555	1915	6000	4380	1995	5640	4117	2135	5400	3942	2214
	22.0	30	8210	5347	1668	6761	4412	1251	6249	4076	1485	6900	4511	1935	6660	4336	2015	6000	4205	2214	5580	4117	2334
	24.0	32	8773	5347	1692	7222	4412	1267	6659	4076	1502	7380	4511	1935	7080	4336	2035	6240	4292	2274	5700	4249	2414

	INDOOR		OUTDOOR TEMPERATURE (°CDB)																				
	EWB	EDB	-10			21			27			32			35			40			43		
	°C	°C	TC	SHC	PI	TC	SHC	PI	TC	SHC	PI	TC	SHC	PI	TC	SHC	PI	TC	SHC	PI	TC	SHC	PI
1.2+1.2+1.2	12.0	18	4008	2750	862	2889	2333	652	2674	2154	768	2952	2391	994	2844	2286	1037	2664	2155	1112	2556	2050	1156
	14.0	20	4008	2750	862	3104	2333	652	2889	2176	777	3168	2391	1004	3060	2313	1048	2844	2155	1123	2736	2076	1177
	16.0	22	4008	2926	876	3319	2333	660	3073	2176	786	3384	2391	1015	3276	2313	1069	3060	2155	1145	2952	2076	1188
	18.0	25	4298	3138	889	3534	2535	669	3258	2356	795	3600	2602	1026	3456	2497	1069	3240	2339	1156	3096	2234	1199
	19.0	27	4443	3243	903	3657	2670	677	3380	2468	804	3744	2733	1037	3600	2628	1080	3384	2470	1156	3240	2365	1199
	22.0	30	4926	3208	903	4057	2647	677	3749	2445	804	4140	2707	1048	3996	2602	1091	3600	2523	1199	3348	2470	1264
	24.0	32	5264	3208	916	4333	2647	686	3995	2445	813	4428	2707	1048	4248	2602	1102	3744	2575	1231	3420	2549	1307
1.2+1.2+1.8	12.0	18	4676	3208	998	3370	2722	754	3119	2513	889	3444	2790	1150	3318	2667	1200	3108	2514	1288	2982	2391	1338
	14.0	20	4676	3208	998	3621	2722	754	3370	2539	899	3696	2790	1163	3570	2698	1213	3318	2514	1300	3192	2422	1363
	16.0	22	4676	3414	1014	3872	2722	764	3585	2539	910	3948	2790	1175	3822	2698	1238	3570	2514	1325	3444	2422	1375
	18.0	25	5014	3661	1029	4123	2958	774	3800	2748	920	4200	3035	1188	4032	2913	1238	3780	2729	1338	3612	2606	1388
	19.0	27	5183	3784	1045	4267	3115	784	3944	2879	931	4368	3189	1200	4200	3066	1250	3948	2882	1338	3780	2759	1388
	22.0	30	5747	3743	1045	4733	3088	784	4374	2853	931	4830	3158	1213	4662	3035	1263	4200	2943	1388	3906	2882	1463
	24.0	32	6141	3743	1060	5055	3088	794	4661	2853	941	5166	3158	1213	4956	3035	1275	4368	3005	1425	3990	2974	1513
1.2+1.2+2.5	12.0	18	5456	3743	1158	3932	3176	875	3639	2931	1031	4018	3255	1334	3871	3112	1392	3626	2933	1494	3479	2790	1552
	14.0	20	5456	3743	1158	4225	3176	875	3932	2962	1043	4312	3255	1349	4165	3148	1407	3871	2933	1508	3724	2826	1581
	16.0	22	5456	3983	1176	4518	3176	886	4183	2962	1055	4606	3255	1363	4459	3148	1436	4165	2933	1537	4018	2826	1595
	18.0	25	5850	4271	1194	4810	3450	898	4434	3206	1067	4900	3541	1378	4704	3398	1436	4410	3184	1552	4214	3040	1610
	19.0	27	6047	4415	1212	4978	3634	909	4601	3359	1080	5096	3720	1392	4900	3577	1450	4606	3362	1552	4410	3219	1610
	22.0	30	6705	4367	1212	5521	3603	909	5103	3328	1080	5635	3684	1407	5439	3541	1465	4900	3434	1610	4557	3362	1697
	24.0	32	7165	4367	1230	5898	3603	921	5438	3328	1092	6027	3684	1407	5782	3541	1479	5096	3505	1653	4655	3470	1755
1.2+1.2+3.5	12.0	18	6569	4507	1218	4734	3824	920	4382	3530	1084	4838	3919	1403	4661	3747	1464	4366	3532	1571	4189	3359	1632
	14.0	20	6569	4507	1218	5087	3824	920	4734	3566	1097	5192	3919	1418	5015	3790	1479	4661	3532	1586	4484	3403	1662
	16.0	22	6569	4795	1237	5440	3824	932	5037	3566	1110	5546	3919	1434	5369	3790	1510	5015	3532	1617	4838	3403	1678
	18.0	25	7044	5142	1256	5792	4155	944	5339	3861	1123	5900	4264	1449	5664	4092	1510	5310	3833	1632	5074	3661	1693
	19.0	27	7281	5315	1275	5994	4375	956	5540	4044	1135	6136	4479	1464	5900	4307	1525	5546	4049	1632	5310	3876	1693
	22.0	30	8073	5258	1275	6648	4339	956	6145	4008	1135	6785	4436	1479	6549	4264	1540	5900	4135	1693	5487	4049	1784
	24.0	32	8627	5258	1294	7102	4339	969	6548	4008	1148	7257	4436	1479	6962	4264	1556	6136	4221	1739	5605	4178	1845
1.2+1.2+5	12.0	18	7015	4812	1673	5055	4083	1264	4679	3769	1490	5166	4185	1927	4977	4001	2011	4662	3771	2158	4473	3587	2242
	14.0	20	7015	4812	1673	5432	4083	1264	5055	3808	1507	5544	4185	1948	5355	4047	2032	4977	3771	2179	4788	3633	2284
	16.0	22	7015	5121	1699	5808	4083	1281	5378	3808	1525	5922	4185	1969	5733	4047	2074	5355	3771	2221	5166	3633	2305
	18.0	25	7522	5491	1725	6185	4436	1297	5701	4122	1542	6300	4553	1990	6048	4369	2074	5670	4093	2242	5418	3909	2325
	19.0	27	7775	5676	1751	6400	4672	1314	5916	4319	1560	6552	4783	2011	6300	4599	2095	5922	4323	2242	5670	4139	2325
	22.0	30	8620	5614	1751	7099	4633	1314	6561	4279	1560	7245	4737	2032	6993	4553	2116	6300	4415	2325	5859	4323	2451
	24.0	32	9212	5614	1777	7583	4633	1331	6991	4279	1577	7749	4737	2032	7434	4553	2137	6552	4507	2388	5985	4461	2535
1.2+1.8+1.8	12.0	18	5344	3666	1134	3852	3111	857	3565	2872	1010	3936	3189	1306	3792	3048	1363	3552	2873	1463	3408	2733	1519
	14.0	20	5344	3666	1134	4139	3111	857	3852	2901	1022	4224	3189	1321	4080	3084	1377	3792	2873	1477	3648	2768	1548
	16.0	22	5344	3901	1151	4425	3111	868	4098	2901	1034	4512	3189	1335	4368	3084	1406	4080	2873	1505	3936	2768	1562
	18.0	25	5731	4183	1169	4712	3380	879	4343	3141	1045	4800	3469	1349	4608	3329	1406	4320	3119	1519	4128	2978	1576
	19.0	27	5924	4324	1187	4876	3560	891	4507	3290	1057	4992	3644	1363	4800	3504	1420	4512	3294	1519	4320	3154	1576
	22.0	30	6568	4277	1187	5409	3530	891	4999	3260	1057	5520	3609	1377	5328	3469	1434	4800	3364	1576	4464	3294	1661
	24.0	32	7019	4277	1205	5778	3530	902	5327	3260	1069	5904	3609	1377	5664	3469	1448	4992	3434	1619	4560	3399	1718
1.2+1.8+2.5	12.0	18	6124	4201	1421	4413	3565	1074	4085	3290	1266	4510	3654	1638	4345	3493	1709	4070	3292	1833	3905	3132	1905
	14.0	20	6124	4201	1421	4742	3565	1074	4413	3325	1281	4840	3654	1655	4675	3533	1727	4345	3292	1851	4180	3172	1940
	16.0	22	6124	4470	1443	5071	3565	1088	4695	3325	1296	5170	3654	1673	5005	3533	1762	4675	3292	1887	4510	3172	1958
	18.0	25	6566	4794	1466	5399	3873	1102	4977	3599	1310	5500	3975	1691	5280	3814	1762	4950	3573	1905	4730	3413	1976
	19.0	27	6788	4955	1488	5587	4079	1116	5165	3770	1325	5720	4176	1709	5500	4015	1780	5170	3774	1905	4950	3614	1976
	22.0	30	7526	4901	1488	6198	4044	1116	5728	3736	1325	6325	4135	1727	6105	3975	1798	5500	3854	1976	5115	3774	2083
	24.0	32	8042	4901	1510	6620	4044	1131	6104	3736	1340	6765	4135	1727	6490	3975	1816	5720	3935	2029	5225	3895	2154

	INDOOR		OUTDOOR TEMPERATURE (°CDB)																				
	EWB	EDB	-10			21			27			32			35			40			43		
	°C	°C	TC	SHC	PI	TC	SHC	PI	TC	SHC	PI	TC	SHC	PI	TC	SHC	PI	TC	SHC	PI	TC	SHC	PI
1.2+1.8+3.5	12.0	18	7015	4812	1613	5055	4083	1219	4679	3769	1436	5166	4185	1858	4977	4001	1939	4662	3771	2081	4473	3587	2161
	14.0	20	7015	4812	1613	5432	4083	1219	5055	3808	1453	5544	4185	1879	5355	4047	1959	4977	3771	2101	4788	3633	2202
	16.0	22	7015	5121	1638	5808	4083	1235	5378	3808	1470	5922	4185	1899	5733	4047	2000	5355	3771	2141	5166	3633	2222
	18.0	25	7522	5491	1663	6185	4436	1251	5701	4122	1487	6300	4553	1919	6048	4369	2000	5670	4093	2161	5418	3909	2242
	19.0	27	7775	5676	1688	6400	4672	1267	5916	4319	1504	6552	4783	1939	6300	4599	2020	5922	4323	2161	5670	4139	2242
	22.0	30	8620	5614	1688	7099	4633	1267	6561	4279	1504	7245	4737	1959	6993	4553	2040	6300	4415	2242	5859	4323	2363
	24.0	32	9212	5614	1714	7583	4633	1283	6991	4279	1521	7749	4737	1959	7434	4553	2060	6552	4507	2303	5985	4461	2444
1.2+1.8+5	12.0	18	7015	4812	1673	5055	4083	1264	4679	3769	1490	5166	4185	1927	4977	4001	2011	4662	3771	2158	4473	3587	2242
	14.0	20	7015	4812	1673	5432	4083	1264	5055	3808	1507	5544	4185	1948	5355	4047	2032	4977	3771	2179	4788	3633	2284
	16.0	22	7015	5121	1699	5808	4083	1281	5378	3808	1525	5922	4185	1969	5733	4047	2074	5355	3771	2221	5166	3633	2305
	18.0	25	7522	5491	1725	6185	4436	1297	5701	4122	1542	6300	4553	1990	6048	4369	2074	5670	4093	2242	5418	3909	2325
	19.0	27	7775	5676	1751	6400	4672	1314	5916	4319	1560	6552	4783	2011	6300	4599	2095	5922	4323	2242	5670	4139	2325
	22.0	30	8620	5614	1751	7099	4633	1314	6561	4279	1560	7245	4737	2032	6993	4553	2116	6300	4415	2325	5859	4323	2451
	24.0	32	9212	5614	1777	7583	4633	1331	6991	4279	1577	7749	4737	2032	7434	4553	2137	6552	4507	2388	5985	4461	2535
1.2+2.5+2.5	12.0	18	6903	4736	1613	4975	4018	1219	4605	3709	1436	5084	4119	1858	4898	3938	1939	4588	3711	2081	4402	3530	2161
	14.0	20	6903	4736	1613	5346	4018	1219	4975	3748	1453	5456	4119	1879	5270	3983	1959	4898	3711	2101	4712	3576	2202
	16.0	22	6903	5039	1638	5716	4018	1235	5293	3748	1470	5828	4119	1899	5642	3983	2000	5270	3711	2141	5084	3576	2222
	18.0	25	7402	5404	1663	6087	4366	1251	5610	4057	1487	6200	4481	1919	5952	4300	2000	5580	4028	2161	5332	3847	2242
	19.0	27	7652	5586	1688	6298	4598	1267	5822	4250	1504	6448	4707	1939	6200	4526	2020	5828	4254	2161	5580	4073	2242
	22.0	30	8483	5525	1688	6986	4559	1267	6457	4211	1504	7130	4662	1959	6882	4481	2040	6200	4345	2242	5766	4254	2363
	24.0	32	9066	5525	1714	7463	4559	1283	6880	4211	1521	7626	4662	1959	7316	4481	2060	6448	4435	2303	5890	4390	2444
1.2+2.5+3.5	12.0	18	7015	4812	1673	5055	4083	1264	4679	3769	1490	5166	4185	1927	4977	4001	2011	4662	3771	2158	4473	3587	2242
	14.0	20	7015	4812	1673	5432	4083	1264	5055	3808	1507	5544	4185	1948	5355	4047	2032	4977	3771	2179	4788	3633	2284
	16.0	22	7015	5121	1699	5808	4083	1281	5378	3808	1525	5922	4185	1969	5733	4047	2074	5355	3771	2221	5166	3633	2305
	18.0	25	7522	5491	1725	6185	4436	1297	5701	4122	1542	6300	4553	1990	6048	4369	2074	5670	4093	2242	5418	3909	2325
	19.0	27	7775	5676	1751	6400	4672	1314	5916	4319	1560	6552	4783	2011	6300	4599	2095	5922	4323	2242	5670	4139	2325
	22.0	30	8620	5614	1751	7099	4633	1314	6561	4279	1560	7245	4737	2032	6993	4553	2116	6300	4415	2325	5859	4323	2451
	24.0	32	9212	5614	1777	7583	4633	1331	6991	4279	1577	7749	4737	2032	7434	4553	2137	6552	4507	2388	5985	4461	2535
1.2+3.5+3.5	12.0	18	7015	4812	1673	5055	4083	1264	4679	3769	1490	5166	4185	1927	4977	4001	2011	4662	3771	2158	4473	3587	2242
	14.0	20	7015	4812	1673	5432	4083	1264	5055	3808	1507	5544	4185	1948	5355	4047	2032	4977	3771	2179	4788	3633	2284
	16.0	22	7015	5121	1699	5808	4083	1281	5378	3808	1525	5922	4185	1969	5733	4047	2074	5355	3771	2221	5166	3633	2305
	18.0	25	7522	5491	1725	6185	4436	1297	5701	4122	1542	6300	4553	1990	6048	4369	2074	5670	4093	2242	5418	3909	2325
	19.0	27	7775	5676	1751	6400	4672	1314	5916	4319	1560	6552	4783	2011	6300	4599	2095	5922	4323	2242	5670	4139	2325
	22.0	30	8620	5614	1751	7099	4633	1314	6561	4279	1560	7245	4737	2032	6993	4553	2116	6300	4415	2325	5859	4323	2451
	24.0	32	9212	5614	1777	7583	4633	1331	6991	4279	1577	7749	4737	2032	7434	4553	2137	6552	4507	2388	5985	4461	2535
1.8+1.8+1.8	12.0	18	6012	4125	1421	4333	3500	1074	4010	3231	1266	4428	3587	1638	4266	3430	1709	3996	3232	1833	3834	3075	1905
	14.0	20	6012	4125	1421	4656	3500	1074	4333	3264	1281	4752	3587	1655	4590	3469	1727	4266	3232	1851	4104	3114	1940
	16.0	22	6012	4389	1443	4979	3500	1088	4610	3264	1296	5076	3587	1673	4914	3469	1762	4590	3232	1887	4428	3114	1958
	18.0	25	6447	4706	1466	5301	3803	1102	4886	3533	1310	5400	3903	1691	5184	3745	1762	4860	3508	1905	4644	3351	1976
	19.0	27	6664	4865	1488	5486	4004	1116	5071	3702	1325	5616	4100	1709	5400	3942	1780	5076	3705	1905	4860	3548	1976
	22.0	30	7389	4812	1488	6085	3971	1116	5624	3668	1325	6210	4060	1727	5994	3903	1798	5400	3784	1976	5022	3705	2083
	24.0	32	7896	4812	1510	6500	3971	1131	5993	3668	1340	6642	4060	1727	6372	3903	1816	5616	3863	2029	5130	3824	2154
1.8+1.8+2.5	12.0	18	6792	4659	1613	4895	3953	1219	4530	3649	1436	5002	4052	1858	4819	3874	1939	4514	3651	2081	4331	3473	2161
	14.0	20	6792	4659	1613	5259	3953	1219	4895	3687	1453	5368	4052	1879	5185	3919	1959	4819	3651	2101	4636	3518	2202
	16.0	22	6792	4958	1638	5624	3953	1235	5207	3687	1470	5734	4052	1899	5551	3919	2000	5185	3651	2141	5002	3518	2222
	18.0	25	7283	5316	1663	5988	4296	1251	5520	3991	1487	6100	4408	1919	5856	4230	2000	5490	3963	2161	5246	3785	2242
	19.0	27	7528	5496	1688	6197	4524	1267	5728	4181	1504	6344	4631	1939	6100	4453	2020	5734	4186	2161	5490	4008	2242
	22.0	30	8347	5436	1688	6874	4486	1267	6353	4143	1504	7015	4587	1959	6771	4408	2040	6100	4275	2242	5673	4186	2363
	24.0	32	8919	5436	1714	7342	4486	1283	6770	4143	1521	7503	4587	1959	7198	4408	2060	6344	4364	2303	5795	4319	2444

	INDOOR		OUTDOOR TEMPERATURE (°CDB)																				
	EWB	EDB	-10			21			27			32			35			40			43		
	°C	°C	TC	SHC	PI	TC	SHC	PI	TC	SHC	PI	TC	SHC	PI	TC	SHC	PI	TC	SHC	PI	TC	SHC	PI
1.8+1.8+3.5	12.0	18	7015	4812	1673	5055	4083	1264	4679	3769	1490	5166	4185	1927	4977	4001	2011	4662	3771	2158	4473	3587	2242
	14.0	20	7015	4812	1673	5432	4083	1264	5055	3808	1507	5544	4185	1948	5355	4047	2032	4977	3771	2179	4788	3633	2284
	16.0	22	7015	5121	1699	5808	4083	1281	5378	3808	1525	5922	4185	1969	5733	4047	2074	5355	3771	2221	5166	3633	2305
	18.0	25	7522	5491	1725	6185	4436	1297	5701	4122	1542	6300	4553	1990	6048	4369	2074	5670	4093	2242	5418	3909	2325
	19.0	27	7775	5676	1751	6400	4672	1314	5916	4319	1560	6552	4783	2011	6300	4599	2095	5922	4323	2242	5670	4139	2325
	22.0	30	8620	5614	1751	7099	4633	1314	6561	4279	1560	7245	4737	2032	6993	4553	2116	6300	4415	2325	5859	4323	2451
	24.0	32	9212	5614	1777	7583	4633	1331	6991	4279	1577	7749	4737	2032	7434	4553	2137	6552	4507	2388	5985	4461	2535
1.8+1.8+5	12.0	18	7015	4812	1673	5055	4083	1264	4679	3769	1490	5166	4185	1927	4977	4001	2011	4662	3771	2158	4473	3587	2242
	14.0	20	7015	4812	1673	5432	4083	1264	5055	3808	1507	5544	4185	1948	5355	4047	2032	4977	3771	2179	4788	3633	2284
	16.0	22	7015	5121	1699	5808	4083	1281	5378	3808	1525	5922	4185	1969	5733	4047	2074	5355	3771	2221	5166	3633	2305
	18.0	25	7522	5491	1725	6185	4436	1297	5701	4122	1542	6300	4553	1990	6048	4369	2074	5670	4093	2242	5418	3909	2325
	19.0	27	7775	5676	1751	6400	4672	1314	5916	4319	1560	6552	4783	2011	6300	4599	2095	5922	4323	2242	5670	4139	2325
	22.0	30	8620	5614	1751	7099	4633	1314	6561	4279	1560	7245	4737	2032	6993	4553	2116	6300	4415	2325	5859	4323	2451
	24.0	32	9212	5614	1777	7583	4633	1331	6991	4279	1577	7749	4737	2032	7434	4553	2137	6552	4507	2388	5985	4461	2535
1.8+2.5+2.5	12.0	18	7015	4812	1673	5055	4083	1264	4679	3769	1490	5166	4185	1927	4977	4001	2011	4662	3771	2158	4473	3587	2242
	14.0	20	7015	4812	1673	5432	4083	1264	5055	3808	1507	5544	4185	1948	5355	4047	2032	4977	3771	2179	4788	3633	2284
	16.0	22	7015	5121	1699	5808	4083	1281	5378	3808	1525	5922	4185	1969	5733	4047	2074	5355	3771	2221	5166	3633	2305
	18.0	25	7522	5491	1725	6185	4436	1297	5701	4122	1542	6300	4553	1990	6048	4369	2074	5670	4093	2242	5418	3909	2325
	19.0	27	7775	5676	1751	6400	4672	1314	5916	4319	1560	6552	4783	2011	6300	4599	2095	5922	4323	2242	5670	4139	2325
	22.0	30	8620	5614	1751	7099	4633	1314	6561	4279	1560	7245	4737	2032	6993	4553	2116	6300	4415	2325	5859	4323	2451
	24.0	32	9212	5614	1777	7583	4633	1331	6991	4279	1577	7749	4737	2032	7434	4553	2137	6552	4507	2388	5985	4461	2535
1.8+2.5+3.5	12.0	18	7015	4812	1673	5055	4083	1264	4679	3769	1490	5166	4185	1927	4977	4001	2011	4662	3771	2158	4473	3587	2242
	14.0	20	7015	4812	1673	5432	4083	1264	5055	3808	1507	5544	4185	1948	5355	4047	2032	4977	3771	2179	4788	3633	2284
	16.0	22	7015	5121	1699	5808	4083	1281	5378	3808	1525	5922	4185	1969	5733	4047	2074	5355	3771	2221	5166	3633	2305
	18.0	25	7522	5491	1725	6185	4436	1297	5701	4122	1542	6300	4553	1990	6048	4369	2074	5670	4093	2242	5418	3909	2325
	19.0	27	7775	5676	1751	6400	4672	1314	5916	4319	1560	6552	4783	2011	6300	4599	2095	5922	4323	2242	5670	4139	2325
	22.0	30	8620	5614	1751	7099	4633	1314	6561	4279	1560	7245	4737	2032	6993	4553	2116	6300	4415	2325	5859	4323	2451
	24.0	32	9212	5614	1777	7583	4633	1331	6991	4279	1577	7749	4737	2032	7434	4553	2137	6552	4507	2388	5985	4461	2535
1.8+3.5+3.5	12.0	18	7015	4812	1673	5055	4083	1264	4679	3769	1490	5166	4185	1927	4977	4001	2011	4662	3771	2158	4473	3587	2242
	14.0	20	7015	4812	1673	5432	4083	1264	5055	3808	1507	5544	4185	1948	5355	4047	2032	4977	3771	2179	4788	3633	2284
	16.0	22	7015	5121	1699	5808	4083	1281	5378	3808	1525	5922	4185	1969	5733	4047	2074	5355	3771	2221	5166	3633	2305
	18.0	25	7522	5491	1725	6185	4436	1297	5701	4122	1542	6300	4553	1990	6048	4369	2074	5670	4093	2242	5418	3909	2325
	19.0	27	7775	5676	1751	6400	4672	1314	5916	4319	1560	6552	4783	2011	6300	4599	2095	5922	4323	2242	5670	4139	2325
	22.0	30	8620	5614	1751	7099	4633	1314	6561	4279	1560	7245	4737	2032	6993	4553	2116	6300	4415	2325	5859	4323	2451
	24.0	32	9212	5614	1777	7583	4633	1331	6991	4279	1577	7749	4737	2032	7434	4553	2137	6552	4507	2388	5985	4461	2535
2.5+2.5+2.5	12.0	18	7015	4812	1673	5055	4083	1264	4679	3769	1490	5166	4185	1927	4977	4001	2011	4662	3771	2158	4473	3587	2242
	14.0	20	7015	4812	1673	5432	4083	1264	5055	3808	1507	5544	4185	1948	5355	4047	2032	4977	3771	2179	4788	3633	2284
	16.0	22	7015	5121	1699	5808	4083	1281	5378	3808	1525	5922	4185	1969	5733	4047	2074	5355	3771	2221	5166	3633	2305
	18.0	25	7522	5491	1725	6185	4436	1297	5701	4122	1542	6300	4553	1990	6048	4369	2074	5670	4093	2242	5418	3909	2325
	19.0	27	7775	5676	1751	6400	4672	1314	5916	4319	1560	6552	4783	2011	6300	4599	2095	5922	4323	2242	5670	4139	2325
	22.0	30	8620	5614	1751	7099	4633	1314	6561	4279	1560	7245	4737	2032	6993	4553	2116	6300	4415	2325	5859	4323	2451
	24.0	32	9212	5614	1777	7583	4633	1331	6991	4279	1577	7749	4737	2032	7434	4553	2137	6552	4507	2388	5985	4461	2535
2.5+2.5+3.5	12.0	18	7015	4812	1673	5055	4083	1264	4679	3769	1490	5166	4185	1927	4977	4001	2011	4662	3771	2158	4473	3587	2242
	14.0	20	7015	4812	1673	5432	4083	1264	5055	3808	1507	5544	4185	1948	5355	4047	2032	4977	3771	2179	4788	3633	2284
	16.0	22	7015	5121	1699	5808	4083	1281	5378	3808	1525	5922	4185	1969	5733	4047	2074	5355	3771	2221	5166	3633	2305
	18.0	25	7522	5491	1725	6185	4436	1297	5701	4122	1542	6300	4553	1990	6048	4369	2074	5670	4093	2242	5418	3909	2325
	19.0	27	7775	5676	1751	6400	4672	1314	5916	4319	1560	6552	4783	2011	6300	4599	2095	5922	4323	2242	5670	4139	2325
	22.0	30	8620	5614	1751	7099	4633	1314	6561	4279	1560	7245	4737	2032	6993	4553	2116	6300	4415	2325	5859	4323	2451
	24.0	32	9212	5614	1777	7583	4633	1331	6991	4279	1577	7749	4737	2032	7434	4553	2137	6552	4507	2388	5985	4461	2535

	INDOOR		OUTDOOR TEMPERATURE (°CDB)																				
	EWB	EDB	-10			21			27			32			35			40			43		
	°C	°C	TC	SHC	PI	TC	SHC	PI	TC	SHC	PI	TC	SHC	PI	TC	SHC	PI	TC	SHC	PI	TC	SHC	PI
(1.2+1.2)+ (1.2+1.2)	12.0	18	5344	3666	1102	3852	3111	833	3565	2872	981	3936	3189	1270	3792	3048	1325	3552	2873	1421	3408	2733	1477
	14.0	20	5344	3666	1102	4139	3111	833	3852	2901	993	4224	3189	1283	4080	3084	1339	3792	2873	1435	3648	2768	1504
	16.0	22	5344	3901	1119	4425	3111	844	4098	2901	1004	4512	3189	1297	4368	3084	1366	4080	2873	1463	3936	2768	1518
	18.0	25	5731	4183	1136	4712	3380	855	4343	3141	1016	4800	3469	1311	4608	3329	1366	4320	3119	1477	4128	2978	1532
	19.0	27	5924	4324	1153	4876	3560	866	4507	3290	1027	4992	3644	1325	4800	3504	1380	4512	3294	1477	4320	3154	1532
	22.0	30	6568	4277	1153	5409	3530	866	4999	3260	1027	5520	3609	1339	5328	3469	1394	4800	3364	1532	4464	3294	1615
	24.0	32	7019	4277	1171	5778	3530	876	5327	3260	1039	5904	3609	1339	5664	3469	1408	4992	3434	1573	4560	3399	1670
(1.2+1.2)+ (1.2+1.8)	12.0	18	6012	4125	1285	4333	3500	971	4010	3231	1145	4428	3587	1481	4266	3430	1546	3996	3232	1658	3834	3075	1723
	14.0	20	6012	4125	1285	4656	3500	971	4333	3264	1158	4752	3587	1497	4590	3469	1562	4266	3232	1674	4104	3114	1755
	16.0	22	6012	4389	1306	4979	3500	984	4610	3264	1172	5076	3587	1513	4914	3469	1594	4590	3232	1707	4428	3114	1771
	18.0	25	6447	4706	1326	5301	3803	997	4886	3533	1185	5400	3903	1530	5184	3745	1594	4860	3508	1723	4644	3351	1787
	19.0	27	6664	4865	1346	5486	4004	1010	5071	3702	1199	5616	4100	1546	5400	3942	1610	5076	3705	1723	4860	3548	1787
	22.0	30	7389	4812	1346	6085	3971	1010	5624	3668	1199	6210	4060	1562	5994	3903	1626	5400	3784	1787	5022	3705	1884
	24.0	32	7896	4812	1366	6500	3971	1023	5993	3668	1212	6642	4060	1562	6372	3903	1642	5616	3863	1835	5130	3824	1948
(1.2+1.8)+ (1.2+1.8)	12.0	18	6680	4583	1469	4815	3889	1110	4456	3589	1308	4920	3986	1693	4740	3811	1766	4440	3592	1895	4260	3416	1969
	14.0	20	6680	4583	1469	5173	3889	1110	4815	3627	1324	5280	3986	1711	5100	3854	1785	4740	3592	1914	4560	3460	2006
	16.0	22	6680	4877	1492	5532	3889	1125	5122	3627	1339	5640	3986	1730	5460	3854	1822	5100	3592	1950	4920	3460	2024
	18.0	25	7163	5229	1515	5890	4225	1139	5429	3926	1355	6000	4336	1748	5760	4161	1822	5400	3898	1969	5160	3723	2042
	19.0	27	7405	5406	1538	6095	4449	1154	5634	4113	1370	6240	4555	1766	6000	4380	1840	5640	4117	1969	5400	3942	2042
	22.0	30	8210	5347	1538	6761	4412	1154	6249	4076	1370	6900	4511	1785	6660	4336	1858	6000	4205	2042	5580	4117	2153
	24.0	32	8773	5347	1561	7222	4412	1169	6659	4076	1385	7380	4511	1785	7080	4336	1877	6240	4292	2098	5700	4249	2226
(1.2+1.2)+ (1.2+2.5)	12.0	18	6792	4659	1517	4895	3953	1146	4530	3649	1351	5002	4052	1748	4819	3874	1824	4514	3651	1957	4331	3473	2033
	14.0	20	6792	4659	1517	5259	3953	1146	4895	3687	1367	5368	4052	1767	5185	3919	1843	4819	3651	1976	4636	3518	2071
	16.0	22	6792	4958	1541	5624	3953	1161	5207	3687	1383	5734	4052	1786	5551	3919	1881	5185	3651	2014	5002	3518	2090
	18.0	25	7283	5316	1564	5988	4296	1177	5520	3991	1399	6100	4408	1805	5856	4230	1881	5490	3963	2033	5246	3785	2109
	19.0	27	7528	5496	1588	6197	4524	1192	5728	4181	1415	6344	4631	1824	6100	4453	1900	5734	4186	2033	5490	4008	2109
	22.0	30	8347	5436	1588	6874	4486	1192	6353	4143	1415	7015	4587	1843	6771	4408	1919	6100	4275	2109	5673	4186	2223
	24.0	32	8919	5436	1612	7342	4486	1207	6770	4143	1431	7503	4587	1843	7198	4408	1938	6344	4364	2166	5795	4319	2299
(1.2+2.5)+ (1.2+2.5)	12.0	18	8239	5652	1932	5938	4796	1460	5496	4427	1721	6068	4916	2226	5846	4700	2323	5476	4430	2493	5254	4214	2589
	14.0	20	8239	5652	1932	6380	4796	1460	5938	4473	1741	6512	4916	2251	6290	4754	2347	5846	4430	2517	5624	4268	2638
	16.0	22	8239	6015	1962	6822	4796	1479	6317	4473	1761	6956	4916	2275	6734	4754	2396	6290	4430	2565	6068	4268	2662
	18.0	25	8835	6449	1993	7265	5211	1499	6696	4842	1782	7400	5348	2299	7104	5132	2396	6660	4808	2589	6364	4592	2686
	19.0	27	9133	6667	2023	7517	5488	1518	6949	5073	1802	7696	5618	2323	7400	5402	2420	6956	5078	2589	6660	4862	2686
	22.0	30	10125	6594	2023	8339	5442	1518	7707	5026	1802	8510	5564	2347	8214	5348	2444	7400	5186	2686	6882	5078	2831
	24.0	32	10820	6594	2053	8907	5442	1537	8212	5026	1822	9102	5564	2347	8732	5348	2468	7696	5294	2759	7030	5240	2928
(1.2+1.2)+ (1.2+3.5)	12.0	18	7905	5423	1709	5697	4601	1291	5273	4248	1522	5822	4717	1969	5609	4509	2054	5254	4250	2204	5041	4043	2290
	14.0	20	7905	5423	1709	6122	4601	1291	5697	4292	1540	6248	4717	1990	6035	4561	2076	5609	4250	2226	5396	4095	2333
	16.0	22	7905	5771	1735	6546	4601	1308	6061	4292	1558	6674	4717	2012	6461	4561	2119	6035	4250	2268	5822	4095	2354
	18.0	25	8477	6188	1762	6970	5000	1325	6425	4646	1575	7100	5131	2033	6816	4924	2119	6390	4613	2290	6106	4406	2375
	19.0	27	8762	6397	1789	7213	5265	1342	6667	4867	1593	7384	5390	2054	7100	5183	2140	6674	4872	2290	6390	4665	2375
	22.0	30	9715	6327	1789	8000	5221	1342	7394	4823	1593	8165	5338	2076	7881	5131	2161	7100	4976	2375	6603	4872	2504
	24.0	32	10382	6327	1815	8546	5221	1359	7879	4823	1611	8733	5338	2076	8378	5131	2183	7384	5079	2440	6745	5028	2589
(1.2+3.5)+ (1.2+3.5)	12.0	18	10466	7180	2315	7543	6092	1750	6981	5623	2062	7708	6244	2668	7426	5970	2784	6956	5627	2987	6674	5352	3103
	14.0	20	10466	7180	2315	8105	6092	1750	7543	5682	2086	8272	6244	2697	7990	6039	2813	7426	5627	3016	7144	5421	3161
	16.0	22	10466	7640	2352	8666	6092	1773	8024	5682	2111	8836	6244	2726	8554	6039	2871	7990	5627	3074	7708	5421	3190
	18.0	25	11223	8193	2388	9228	6619	1796	8506	6151	2135	9400	6793	2755	9024	6519	2871	8460	6107	3103	8084	5833	3219
	19.0	27	11601	8469	2424	9549	6971	1819	8827	6444	2159	9776	7136	2784	9400	6862	2900	8836	6450	3103	8460	6176	3219
	22.0	30	12862	8377	2424	10592	6912	1819	9790	6385	2159	10810	7068	2813	10434	6793	2929	9400	6588	3219	8742	6450	3393
	24.0	32	13745	8377	2460	11314	6912	1842	10432	6385	2183	11562	7068	2813	11092	6793	2958	9776	6725	3306	8930	6656	3509

	INDOOR		OUTDOOR TEMPERATURE (°CDB)																				
	EWB	EDB	-10			21			27			32			35			40			43		
	°C	°C	TC	SHC	PI	TC	SHC	PI	TC	SHC	PI	TC	SHC	PI	TC	SHC	PI	TC	SHC	PI	TC	SHC	PI
(1.2+1.2)+ (1.2+5)	12.0	18	9575	6569	1948	6901	5574	1472	6387	5145	1735	7052	5713	2245	6794	5462	2342	6364	5148	2513	6106	4897	2611
	14.0	20	9575	6569	1948	7415	5574	1472	6901	5198	1755	7568	5713	2269	7310	5525	2367	6794	5148	2538	6536	4960	2660
	16.0	22	9575	6990	1979	7929	5574	1492	7341	5198	1776	8084	5713	2294	7826	5525	2416	7310	5148	2586	7052	4960	2684
	18.0	25	10268	7495	2009	8443	6056	1511	7782	5627	1796	8600	6215	2318	8256	5964	2416	7740	5587	2611	7396	5336	2708
	19.0	27	10614	7748	2040	8736	6378	1530	8076	5895	1817	8944	6529	2342	8600	6278	2440	8084	5901	2611	7740	5650	2708
	22.0	30	11767	7664	2040	9691	6324	1530	8957	5842	1817	9890	6466	2367	9546	6215	2464	8600	6027	2708	7998	5901	2855
	24.0	32	12575	7664	2070	10351	6324	1550	9544	5842	1837	10578	6466	2367	10148	6215	2489	8944	6152	2782	8170	6090	2952
(1.2+5)+ (1.2+5)	12.0	18	13806	9471	2795	9950	8036	2112	9209	7418	2489	10168	8237	3220	9796	7875	3360	9176	7423	3605	8804	7061	3745
	14.0	20	13806	9471	2795	10691	8036	2112	9950	7495	2518	10912	8237	3255	10540	7966	3395	9796	7423	3640	9424	7151	3815
	16.0	22	13806	10079	2838	11432	8036	2140	10585	7495	2547	11656	8237	3290	11284	7966	3465	10540	7423	3710	10168	7151	3850
	18.0	25	14804	10807	2882	12173	8732	2167	11220	8114	2577	12400	8961	3325	11904	8599	3465	11160	8056	3745	10664	7694	3885
	19.0	27	15303	11171	2926	12597	9196	2195	11644	8500	2606	12896	9414	3360	12400	9052	3500	11656	8509	3745	11160	8147	3885
	22.0	30	16967	11050	2926	13973	9118	2195	12914	8423	2606	14260	9324	3395	13764	8961	3535	12400	8690	3885	11532	8509	4095
	24.0	32	18131	11050	2969	14925	9118	2223	13761	8423	2635	15252	9324	3395	14632	8961	3570	12896	8871	3990	11780	8780	4235
(1.8+1.8)+ (1.8+1.8)	12.0	18	8017	5500	1900	5778	4666	1436	5347	4307	1692	5904	4783	2190	5688	4573	2285	5328	4310	2451	5112	4100	2547
	14.0	20	8017	5500	1900	6208	4666	1436	5778	4352	1712	6336	4783	2213	6120	4625	2309	5688	4310	2475	5472	4152	2594
	16.0	22	8017	5852	1930	6638	4666	1455	6146	4352	1732	6768	4783	2237	6552	4625	2356	6120	4310	2523	5904	4152	2618
	18.0	25	8596	6275	1960	7068	5070	1474	6515	4711	1752	7200	5203	2261	6912	4993	2356	6480	4678	2547	6192	4468	2642
	19.0	27	8886	6487	1989	7314	5339	1493	6761	4936	1772	7488	5466	2285	7200	5256	2380	6768	4941	2547	6480	4730	2642
	22.0	30	9852	6416	1989	8113	5294	1493	7499	4891	1772	8280	5414	2309	7992	5203	2404	7200	5046	2642	6696	4941	2785
	24.0	32	10528	6416	2019	8666	5294	1512	7990	4891	1792	8856	5414	2309	8496	5203	2428	7488	5151	2713	6840	5098	2880
(1.8+1.8)+ (1.8+2.5)	12.0	18	8685	5958	1996	6259	5055	1508	5793	4666	1778	6396	5182	2300	6162	4954	2400	5772	4669	2575	5538	4441	2675
	14.0	20	8685	5958	1996	6725	5055	1508	6259	4715	1799	6864	5182	2325	6630	5011	2425	6162	4669	2600	5928	4498	2725
	16.0	22	8685	6340	2027	7191	5055	1528	6659	4715	1820	7332	5182	2350	7098	5011	2475	6630	4669	2650	6396	4498	2750
	18.0	25	9312	6798	2058	7657	5493	1548	7058	5104	1840	7800	5637	2375	7488	5409	2475	7020	5068	2675	6708	4840	2775
	19.0	27	9626	7027	2090	7924	5784	1568	7324	5347	1861	8112	5922	2400	7800	5694	2500	7332	5352	2675	7020	5125	2775
	22.0	30	10673	6951	2090	8789	5736	1568	8123	5298	1861	8970	5865	2425	8658	5637	2525	7800	5466	2775	7254	5352	2925
	24.0	32	11405	6951	2121	9389	5736	1588	8656	5298	1882	9594	5865	2425	9204	5637	2550	8112	5580	2850	7410	5523	3025
(1.8+2.5)+ (1.8+2.5)	12.0	18	9353	6416	2092	6740	5444	1581	6239	5025	1863	6888	5580	2410	6636	5335	2515	6216	5028	2699	5964	4783	2803
	14.0	20	9353	6416	2092	7242	5444	1581	6740	5078	1885	7392	5580	2437	7140	5396	2541	6636	5028	2725	6384	4844	2856
	16.0	22	9353	6827	2125	7744	5444	1602	7171	5078	1907	7896	5580	2463	7644	5396	2594	7140	5028	2777	6888	4844	2882
	18.0	25	10029	7321	2157	8246	5915	1622	7601	5496	1929	8400	6071	2489	8064	5825	2594	7560	5457	2803	7224	5212	2908
	19.0	27	10367	7568	2190	8533	6229	1643	7888	5758	1951	8736	6377	2515	8400	6132	2620	7896	5764	2803	7560	5519	2908
	22.0	30	11494	7486	2190	9465	6177	1643	8748	5706	1951	9660	6316	2541	9324	6071	2646	8400	5887	2908	7812	5764	3065
	24.0	32	12282	7486	2223	10111	6177	1664	9322	5706	1973	10332	6316	2541	9912	6071	2672	8736	6009	2987	7980	5948	3170
(1.8+1.8)+ (1.8+3.5)	12.0	18	9575	6569	2268	6901	5574	1714	6387	5145	2020	7052	5713	2613	6794	5462	2726	6364	5148	2925	6106	4897	3039
	14.0	20	9575	6569	2268	7415	5574	1714	6901	5198	2043	7568	5713	2641	7310	5525	2755	6794	5148	2954	6536	4960	3096
	16.0	22	9575	6990	2303	7929	5574	1736	7341	5198	2067	8084	5713	2670	7826	5525	2812	7310	5148	3010	7052	4960	3124
	18.0	25	10268	7495	2338	8443	6056	1759	7782	5627	2091	8600	6215	2698	8256	5964	2812	7740	5587	3039	7396	5336	3152
	19.0	27	10614	7748	2374	8736	6378	1781	8076	5895	2115	8944	6529	2726	8600	6278	2840	8084	5901	3039	7740	5650	3152
	22.0	30	11767	7664	2374	9691	6324	1781	8957	5842	2115	9890	6466	2755	9546	6215	2868	8600	6027	3152	7998	5901	3323
	24.0	32	12575	7664	2409	10351	6324	1804	9544	5842	2138	10578	6466	2755	10148	6215	2897	8944	6152	3238	8170	6090	3436
(1.8+2.5)+ (1.8+3.5)	12.0	18	10243	7027	2363	7382	5962	1786	6833	5504	2105	7544	6112	2723	7268	5843	2842	6808	5507	3049	6532	5238	3167
	14.0	20	10243	7027	2363	7932	5962	1786	7382	5561	2130	8096	6112	2753	7820	5910	2871	7268	5507	3078	6992	5306	3226
	16.0	22	10243	7478	2400	8482	5962	1809	7854	5561	2154	8648	6112	2782	8372	5910	2930	7820	5507	3138	7544	5306	3256
	18.0	25	10984	8018	2437	9032	6478	1833	8325	6020	2179	9200	6649	2812	8832	6380	2930	8280	5977	3167	7912	5709	3286
	19.0	27	11354	8289	2474	9346	6822	1856	8639	6306	2204	9568	6985	2842	9200	6716	2960	8648	6313	3167	8280	6044	3286
	22.0	30	12588	8198	2474	10367	6765	1856	9581	6249	2204	10580	6917	2871	10212	6649	2990	9200	6447	3286	8556	6313	3463
	24.0	32	13452	8198	2511	11074	6765	1880	10210	6249	2229	11316	6917	2871	10856	6649	3019	9568	6582	3374	8740	6515	3582

	INDOOR		OUTDOOR TEMPERATURE (°CDB)																				
	EWB	EDB	-10			21			27			32			35			40			43		
	°C	°C	TC	SHC	PI	TC	SHC	PI	TC	SHC	PI	TC	SHC	PI	TC	SHC	PI	TC	SHC	PI	TC	SHC	PI
(1.8+1.8)+ (1.8+5)	12.0	18	10021	6874	2383	7222	5833	1801	6684	5384	2123	7380	5979	2746	7110	5716	2866	6660	5387	3075	6390	5125	3194
	14.0	20	10021	6874	2383	7760	5833	1801	7222	5440	2148	7920	5979	2776	7650	5782	2895	7110	5387	3104	6840	5190	3254
	16.0	22	10021	7315	2421	8298	5833	1825	7683	5440	2173	8460	5979	2806	8190	5782	2955	7650	5387	3164	7380	5190	3284
	18.0	25	10745	7844	2458	8835	6338	1848	8144	5889	2198	9000	6504	2836	8640	6242	2955	8100	5847	3194	7740	5585	3313
	19.0	27	11107	8108	2495	9143	6674	1872	8451	6169	2223	9360	6833	2866	9000	6570	2985	8460	6176	3194	8100	5913	3313
	22.0	30	12315	8020	2495	10141	6618	1872	9373	6113	2223	10350	6767	2895	9990	6504	3015	9000	6307	3313	8370	6176	3492
	24.0	32	13160	8020	2532	10833	6618	1896	9988	6113	2247	11070	6767	2895	10620	6504	3045	9360	6439	3403	8550	6373	3612
(1.8+2.5)+ (1.8+5)	12.0	18	10689	7333	2479	7703	6222	1873	7130	5743	2208	7872	6377	2857	7584	6097	2981	7104	5747	3198	6816	5466	3322
	14.0	20	10689	7333	2479	8277	6222	1873	7703	5803	2234	8448	6377	2888	8160	6167	3012	7584	5747	3229	7296	5536	3384
	16.0	22	10689	7803	2518	8851	6222	1898	8195	5803	2260	9024	6377	2919	8736	6167	3074	8160	5747	3291	7872	5536	3416
	18.0	25	11461	8367	2557	9424	6760	1923	8687	6282	2286	9600	6938	2950	9216	6658	3074	8640	6237	3322	8256	5957	3447
	19.0	27	11848	8649	2595	9752	7119	1947	9015	6581	2312	9984	7288	2981	9600	7008	3105	9024	6588	3322	8640	6307	3447
	22.0	30	13136	8555	2595	10818	7059	1947	9998	6521	2312	11040	7218	3012	10656	6938	3136	9600	6728	3447	8928	6588	3633
	24.0	32	14037	8555	2634	11555	7059	1972	10654	6521	2338	11808	7218	3012	11328	6938	3167	9984	6868	3540	9120	6798	3757
(1.8+3.5)+ (1.8+3.5)	12.0	18	11134	7638	2635	8024	6481	1991	7427	5982	2347	8200	6643	3036	7900	6351	3168	7400	5986	3399	7100	5694	3531
	14.0	20	11134	7638	2635	8622	6481	1991	8024	6045	2374	8800	6643	3069	8500	6424	3201	7900	5986	3432	7600	5767	3597
	16.0	22	11134	8128	2676	9220	6481	2017	8537	6045	2402	9400	6643	3102	9100	6424	3267	8500	5986	3498	8200	5767	3630
	18.0	25	11939	8715	2717	9817	7042	2044	9049	6543	2429	10000	7227	3135	9600	6935	3267	9000	6497	3531	8600	6205	3663
	19.0	27	12341	9009	2758	10159	7416	2070	9390	6855	2457	10400	7592	3168	10000	7300	3300	9400	6862	3531	9000	6570	3663
	22.0	30	13683	8911	2758	11268	7353	2070	10415	6793	2457	11500	7519	3201	11100	7227	3333	10000	7008	3663	9300	6862	3861
	24.0	32	14622	8911	2800	12037	7353	2096	11098	6793	2485	12300	7519	3201	11800	7227	3366	10400	7154	3762	9500	7081	3993
(1.8+3.5)+ (1.8+5)	12.0	18	11580	7944	2751	8345	6740	2079	7724	6222	2450	8528	6909	3169	8216	6605	3307	7696	6225	3548	7384	5922	3686
	14.0	20	11580	7944	2751	8967	6740	2079	8345	6287	2479	9152	6909	3204	8840	6681	3342	8216	6225	3583	7904	5998	3755
	16.0	22	11580	8453	2794	9588	6740	2106	8878	6287	2507	9776	6909	3238	9464	6681	3411	8840	6225	3652	8528	5998	3790
	18.0	25	12417	9064	2837	10210	7324	2133	9411	6805	2536	10400	7516	3273	9984	7212	3411	9360	6757	3686	8944	6453	3824
	19.0	27	12835	9370	2880	10565	7712	2161	9766	7129	2565	10816	7896	3307	10400	7592	3445	9776	7136	3686	9360	6833	3824
	22.0	30	14230	9268	2880	11719	7648	2161	10831	7064	2565	11960	7820	3342	11544	7516	3479	10400	7288	3824	9672	7136	4031
	24.0	32	15207	9268	2923	12518	7648	2188	11541	7064	2594	12792	7820	3342	12272	7516	3514	10816	7440	3927	9880	7364	4168
(1.8+5)+ (1.8+5)	12.0	18	12025	8249	2866	8666	6999	2166	8021	6461	2553	8856	7174	3303	8532	6859	3446	7992	6465	3698	7668	6150	3841
	14.0	20	12025	8249	2866	9312	6999	2166	8666	6528	2583	9504	7174	3339	9180	6938	3482	8532	6465	3734	8208	6228	3913
	16.0	22	12025	8778	2911	9957	6999	2195	9220	6528	2613	10152	7174	3375	9828	6938	3554	9180	6465	3805	8856	6228	3949
	18.0	25	12894	9413	2956	10602	7605	2223	9773	7067	2643	10800	7805	3411	10368	7490	3554	9720	7017	3841	9288	6701	3985
	19.0	27	13329	9730	3001	10971	8009	2252	10141	7403	2673	11232	8199	3446	10800	7884	3590	10152	7411	3841	9720	7096	3985
	22.0	30	14778	9624	3001	12170	7942	2252	11248	7336	2673	12420	8121	3482	11988	7805	3626	10800	7569	3985	10044	7411	4200
	24.0	32	15792	9624	3046	13000	7942	2280	11985	7336	2703	13284	8121	3482	12744	7805	3662	11232	7726	4093	10260	7647	4344
(1.8+2.5)+ (2.5+2.5)	12.0	18	10243	7027	2363	7382	5962	1786	6833	5504	2105	7544	6112	2723	7268	5843	2842	6808	5507	3049	6532	5238	3167
	14.0	20	10243	7027	2363	7932	5962	1786	7382	5561	2130	8096	6112	2753	7820	5910	2871	7268	5507	3078	6992	5306	3226
	16.0	22	10243	7478	2400	8482	5962	1809	7854	5561	2154	8648	6112	2782	8372	5910	2930	7820	5507	3138	7544	5306	3256
	18.0	25	10984	8018	2437	9032	6478	1833	8325	6020	2179	9200	6649	2812	8832	6380	2930	8280	5977	3167	7912	5709	3286
	19.0	27	11354	8289	2474	9346	6822	1856	8639	6306	2204	9568	6985	2842	9200	6716	2960	8648	6313	3167	8280	6044	3286
	22.0	30	12588	8198	2474	10367	6765	1856	9581	6249	2204	10580	6917	2871	10212	6649	2990	9200	6447	3286	8556	6313	3463
	24.0	32	13452	8198	2511	11074	6765	1880	10210	6249	2229	11316	6917	2871	10856	6649	3019	9568	6582	3374	8740	6515	3582
(1.8+5)+ (2.5+2.5)	12.0	18	11580	7944	2751	8345	6740	2079	7724	6222	2450	8528	6909	3169	8216	6605	3307	7696	6225	3548	7384	5922	3686
	14.0	20	11580	7944	2751	8967	6740	2079	8345	6287	2479	9152	6909	3204	8840	6681	3342	8216	6225	3583	7904	5998	3755
	16.0	22	11580	8453	2794	9588	6740	2106	8878	6287	2507	9776	6909	3238	9464	6681	3411	8840	6225	3652	8528	5998	3790
	18.0	25	12417	9064	2837	10210	7324	2133	9411	6805	2536	10400	7516	3273	9984	7212	3411	9360	6757	3686	8944	6453	3824
	19.0	27	12835	9370	2880	10565	7712	2161	9766	7129	2565	10816	7896	3307	10400	7592	3445	9776	7136	3686	9360	6833	3824
	22.0	30	14230	9268	2880	11719	7648	2161	10831	7064	2565	11960	7820	3342	11544	7516	3479	10400	7288	3824	9672	7136	4031
	24.0	32	15207	9268	2923	12518	7648	2188	11541	7064	2594	12792	7820	3342	12272	7516	3514	10816	7440	3927	9880	7364	4168

	INDOOR		OUTDOOR TEMPERATURE (°CDB)																				
	EWB	EDB	-10			21			27			32			35			40			43		
	°C	°C	TC	SHC	PI	TC	SHC	PI	TC	SHC	PI	TC	SHC	PI	TC	SHC	PI	TC	SHC	PI	TC	SHC	PI
(1.8+3.5)+ (2.5+2.5)	12.0	18	11134	7638	2635	8024	6481	1991	7427	5982	2347	8200	6643	3036	7900	6351	3168	7400	5986	3399	7100	5694	3531
	14.0	20	11134	7638	2635	8622	6481	1991	8024	6045	2374	8800	6643	3069	8500	6424	3201	7900	5986	3432	7600	5767	3597
	16.0	22	11134	8128	2676	9220	6481	2017	8537	6045	2402	9400	6643	3102	9100	6424	3267	8500	5986	3498	8200	5767	3630
	18.0	25	11939	8715	2717	9817	7042	2044	9049	6543	2429	10000	7227	3135	9600	6935	3267	9000	6497	3531	8600	6205	3663
	19.0	27	12341	9009	2758	10159	7416	2070	9390	6855	2457	10400	7592	3168	10000	7300	3300	9400	6862	3531	9000	6570	3663
	22.0	30	13683	8911	2758	11268	7353	2070	10415	6793	2457	11500	7519	3201	11100	7227	3333	10000	7008	3663	9300	6862	3861
	24.0	32	14622	8911	2800	12037	7353	2096	11098	6793	2485	12300	7519	3201	11800	7227	3366	10400	7154	3762	9500	7081	3993
(1.8+3.5)+ (2.5+3.5)	12.0	18	11357	7791	2699	8185	6611	2039	7575	6102	2404	8364	6776	3110	8058	6478	3245	7548	6106	3481	7242	5808	3617
	14.0	20	11357	7791	2699	8794	6611	2039	8185	6166	2432	8976	6776	3143	8670	6552	3279	8058	6106	3515	7752	5882	3684
	16.0	22	11357	8290	2741	9404	6611	2066	8707	6166	2460	9588	6776	3177	9282	6552	3346	8670	6106	3583	8364	5882	3718
	18.0	25	12178	8890	2783	10013	7183	2093	9230	6674	2488	10200	7372	3211	9792	7074	3346	9180	6627	3617	8772	6329	3752
	19.0	27	12588	9189	2825	10362	7564	2120	9578	6992	2517	10608	7744	3245	10200	7446	3380	9588	6999	3617	9180	6701	3752
	22.0	30	13957	9090	2825	11494	7500	2120	10623	6928	2517	11730	7669	3279	11322	7372	3414	10200	7148	3752	9486	6999	3955
	24.0	32	14914	9090	2867	12277	7500	2147	11320	6928	2545	12546	7669	3279	12036	7372	3448	10608	7297	3853	9690	7223	4090
(1.8+5)+ (2.5+3.5)	12.0	18	11802	8097	2814	8506	6870	2127	7872	6341	2507	8692	7042	3243	8374	6732	3384	7844	6345	3631	7526	6036	3772
	14.0	20	11802	8097	2814	9139	6870	2127	8506	6407	2536	9328	7042	3278	9010	6809	3419	8374	6345	3666	8056	6113	3842
	16.0	22	11802	8616	2858	9773	6870	2155	9049	6407	2566	9964	7042	3314	9646	6809	3490	9010	6345	3737	8692	6113	3878
	18.0	25	12655	9238	2902	10406	7464	2183	9592	6936	2595	10600	7661	3349	10176	7351	3490	9540	6887	3772	9116	6577	3913
	19.0	27	13082	9550	2946	10768	7861	2211	9954	7266	2625	11024	8048	3384	10600	7738	3525	9964	7274	3772	9540	6964	3913
	22.0	30	14504	9446	2946	11944	7795	2211	11040	7200	2625	12190	7970	3419	11766	7661	3560	10600	7428	3913	9858	7274	4124
	24.0	32	15499	9446	2990	12759	7795	2239	11763	7200	2654	13038	7970	3419	12508	7661	3596	11024	7583	4019	10070	7506	4265
(1.8+5)+ (2.5+5)	12.0	18	12025	8249	2866	8666	6999	2166	8021	6461	2553	8856	7174	3303	8532	6859	3446	7992	6465	3698	7668	6150	3841
	14.0	20	12025	8249	2866	9312	6999	2166	8666	6528	2583	9504	7174	3339	9180	6938	3482	8532	6465	3734	8208	6228	3913
	16.0	22	12025	8778	2911	9957	6999	2195	9220	6528	2613	10152	7174	3375	9828	6938	3554	9180	6465	3805	8856	6228	3949
	18.0	25	12894	9413	2956	10602	7605	2223	9773	7067	2643	10800	7805	3411	10368	7490	3554	9720	7017	3841	9288	6701	3985
	19.0	27	13329	9730	3001	10971	8009	2252	10141	7403	2673	11232	8199	3446	10800	7884	3590	10152	7411	3841	9720	7096	3985
	22.0	30	14778	9624	3001	12170	7942	2252	11248	7336	2673	12420	8121	3482	11988	7805	3626	10800	7569	3985	10044	7411	4200
	24.0	32	15792	9624	3046	13000	7942	2280	11985	7336	2703	13284	8121	3482	12744	7805	3662	11232	7726	4093	10260	7647	4344
(1.8+3.5)+ (3.5+3.5)	12.0	18	11580	7944	2751	8345	6740	2079	7724	6222	2450	8528	6909	3169	8216	6605	3307	7696	6225	3548	7384	5922	3686
	14.0	20	11580	7944	2751	8967	6740	2079	8345	6287	2479	9152	6909	3204	8840	6681	3342	8216	6225	3583	7904	5998	3755
	16.0	22	11580	8453	2794	9588	6740	2106	8878	6287	2507	9776	6909	3238	9464	6681	3411	8840	6225	3652	8528	5998	3790
	18.0	25	12417	9064	2837	10210	7324	2133	9411	6805	2536	10400	7516	3273	9984	7212	3411	9360	6757	3686	8944	6453	3824
	19.0	27	12835	9370	2880	10565	7712	2161	9766	7129	2565	10816	7896	3307	10400	7592	3445	9776	7136	3686	9360	6833	3824
	22.0	30	14230	9268	2880	11719	7648	2161	10831	7064	2565	11960	7820	3342	11544	7516	3479	10400	7288	3824	9672	7136	4031
	24.0	32	15207	9268	2923	12518	7648	2188	11541	7064	2594	12792	7820	3342	12272	7516	3514	10816	7440	3927	9880	7364	4168
(1.8+5)+ (3.5+3.5)	12.0	18	12025	8249	2866	8666	6999	2166	8021	6461	2553	8856	7174	3303	8532	6859	3446	7992	6465	3698	7668	6150	3841
	14.0	20	12025	8249	2866	9312	6999	2166	8666	6528	2583	9504	7174	3339	9180	6938	3482	8532	6465	3734	8208	6228	3913
	16.0	22	12025	8778	2911	9957	6999	2195	9220	6528	2613	10152	7174	3375	9828	6938	3554	9180	6465	3805	8856	6228	3949
	18.0	25	12894	9413	2956	10602	7605	2223	9773	7067	2643	10800	7805	3411	10368	7490	3554	9720	7017	3841	9288	6701	3985
	19.0	27	13329	9730	3001	10971	8009	2252	10141	7403	2673	11232	8199	3446	10800	7884	3590	10152	7411	3841	9720	7096	3985
	22.0	30	14778	9624	3001	12170	7942	2252	11248	7336	2673	12420	8121	3482	11988	7805	3626	10800	7569	3985	10044	7411	4200
	24.0	32	15792	9624	3046	13000	7942	2280	11985	7336	2703	13284	8121	3482	12744	7805	3662	11232	7726	4093	10260	7647	4344
(1.8+5)+ (3.5+5)	12.0	18	12693	8708	3026	9148	7388	2287	8467	6820	2695	9348	7573	3487	9006	7240	3638	8436	6824	3904	8094	6491	4055
	14.0	20	12693	8708	3026	9829	7388	2287	9148	6891	2727	10032	7573	3525	9690	7323	3676	9006	6824	3942	8664	6574	4131
	16.0	22	12693	9266	3073	10510	7388	2317	9732	6891	2758	10716	7573	3563	10374	7323	3752	9690	6824	4017	9348	6574	4169
	18.0	25	13610	9936	3121	11191	8028	2347	10316	7459	2790	11400	8239	3601	10944	7906	3752	10260	7407	4055	9804	7074	4207
	19.0	27	14069	10271	3168	11581	8454	2377	10705	7815	2822	11856	8655	3638	11400	8322	3790	10716	7823	4055	10260	7490	4207
	22.0	30	15599	10159	3168	12846	8383	2377	11873	7744	2822	13110	8572	3676	12654	8239	3828	11400	7989	4207	10602	7823	4434
	24.0	32	16669	10159	3215	13722	8383	2407	12651	7744	2854	14022	8572	3676	13452	8239	3866	11856	8156	4321	10830	8072	4586

	INDOOR		OUTDOOR TEMPERATURE (°CDB)																				
	EWB	EDB	-10			21			27			32			35			40			43		
	°C	°C	TC	SHC	PI	TC	SHC	PI	TC	SHC	PI	TC	SHC	PI	TC	SHC	PI	TC	SHC	PI	TC	SHC	PI
(2.5+2.5)+ (2.5+2.5)	12.0	18	11134	7638	2635	8024	6481	1991	7427	5982	2347	8200	6643	3036	7900	6351	3168	7400	5986	3399	7100	5694	3531
	14.0	20	11134	7638	2635	8622	6481	1991	8024	6045	2374	8800	6643	3069	8500	6424	3201	7900	5986	3432	7600	5767	3597
	16.0	22	11134	8128	2676	9220	6481	2017	8537	6045	2402	9400	6643	3102	9100	6424	3267	8500	5986	3498	8200	5767	3630
	18.0	25	11939	8715	2717	9817	7042	2044	9049	6543	2429	10000	7227	3135	9600	6935	3267	9000	6497	3531	8600	6205	3663
	19.0	27	12341	9009	2758	10159	7416	2070	9390	6855	2457	10400	7592	3168	10000	7300	3300	9400	6862	3531	9000	6570	3663
	22.0	30	13683	8911	2758	11268	7353	2070	10415	6793	2457	11500	7519	3201	11100	7227	3333	10000	7008	3663	9300	6862	3861
	24.0	32	14622	8911	2800	12037	7353	2096	11098	6793	2485	12300	7519	3201	11800	7227	3366	10400	7154	3762	9500	7081	3993
(2.5+2.5)+ (2.5+3.5)	12.0	18	11357	7791	2699	8185	6611	2039	7575	6102	2404	8364	6776	3110	8058	6478	3245	7548	6106	3481	7242	5808	3617
	14.0	20	11357	7791	2699	8794	6611	2039	8185	6166	2432	8976	6776	3143	8670	6552	3279	8058	6106	3515	7752	5882	3684
	16.0	22	11357	8290	2741	9404	6611	2066	8707	6166	2460	9588	6776	3177	9282	6552	3346	8670	6106	3583	8364	5882	3718
	18.0	25	12178	8890	2783	10013	7183	2093	9230	6674	2488	10200	7372	3211	9792	7074	3346	9180	6627	3617	8772	6329	3752
	19.0	27	12588	9189	2825	10362	7564	2120	9578	6992	2517	10608	7744	3245	10200	7446	3380	9588	6999	3617	9180	6701	3752
	22.0	30	13957	9090	2825	11494	7500	2120	10623	6928	2517	11730	7669	3279	11322	7372	3414	10200	7148	3752	9486	6999	3955
	24.0	32	14914	9090	2867	12277	7500	2147	11320	6928	2545	12546	7669	3279	12036	7372	3448	10608	7297	3853	9690	7223	4090
(2.5+2.5)+ (2.5+5)	12.0	18	11580	7944	2751	8345	6740	2079	7724	6222	2450	8528	6909	3169	8216	6605	3307	7696	6225	3548	7384	5922	3686
	14.0	20	11580	7944	2751	8967	6740	2079	8345	6287	2479	9152	6909	3204	8840	6681	3342	8216	6225	3583	7904	5998	3755
	16.0	22	11580	8453	2794	9588	6740	2106	8878	6287	2507	9776	6909	3238	9464	6681	3411	8840	6225	3652	8528	5998	3790
	18.0	25	12417	9064	2837	10210	7324	2133	9411	6805	2536	10400	7516	3273	9984	7212	3411	9360	6757	3686	8944	6453	3824
	19.0	27	12835	9370	2880	10565	7712	2161	9766	7129	2565	10816	7896	3307	10400	7592	3445	9776	7136	3686	9360	6833	3824
	22.0	30	14230	9268	2880	11719	7648	2161	10831	7064	2565	11960	7820	3342	11544	7516	3479	10400	7288	3824	9672	7136	4031
	24.0	32	15207	9268	2923	12518	7648	2188	11541	7064	2594	12792	7820	3342	12272	7516	3514	10816	7440	3927	9880	7364	4168
(2.5+3.5)+ (2.5+3.5)	12.0	18	11580	7944	2763	8345	6740	2088	7724	6222	2460	8528	6909	3183	8216	6605	3322	7696	6225	3564	7384	5922	3702
	14.0	20	11580	7944	2763	8967	6740	2088	8345	6287	2489	9152	6909	3218	8840	6681	3356	8216	6225	3598	7904	5998	3771
	16.0	22	11580	8453	2806	9588	6740	2115	8878	6287	2518	9776	6909	3252	9464	6681	3425	8840	6225	3668	8528	5998	3806
	18.0	25	12417	9064	2849	10210	7324	2143	9411	6805	2547	10400	7516	3287	9984	7212	3425	9360	6757	3702	8944	6453	3841
	19.0	27	12835	9370	2892	10565	7712	2170	9766	7129	2576	10816	7896	3322	10400	7592	3460	9776	7136	3702	9360	6833	3841
	22.0	30	14230	9268	2892	11719	7648	2170	10831	7064	2576	11960	7820	3356	11544	7516	3495	10400	7288	3841	9672	7136	4048
	24.0	32	15207	9268	2935	12518	7648	2198	11541	7064	2605	12792	7820	3356	12272	7516	3529	10816	7440	3944	9880	7364	4187
(2.5+5)+ (2.5+3.5)	12.0	18	11802	8097	2814	8506	6870	2127	7872	6341	2507	8692	7042	3243	8374	6732	3384	7844	6345	3631	7526	6036	3772
	14.0	20	11802	8097	2814	9139	6870	2127	8506	6407	2536	9328	7042	3278	9010	6809	3419	8374	6345	3666	8056	6113	3842
	16.0	22	11802	8616	2858	9773	6870	2155	9049	6407	2566	9964	7042	3314	9646	6809	3490	9010	6345	3737	8692	6113	3878
	18.0	25	12655	9238	2902	10406	7464	2183	9592	6936	2595	10600	7661	3349	10176	7351	3490	9540	6887	3772	9116	6577	3913
	19.0	27	13082	9550	2946	10768	7861	2211	9954	7266	2625	11024	8048	3384	10600	7738	3525	9964	7274	3772	9540	6964	3913
	22.0	30	14504	9446	2946	11944	7795	2211	11040	7200	2625	12190	7970	3419	11766	7661	3560	10600	7428	3913	9858	7274	4124
	24.0	32	15499	9446	2990	12759	7795	2239	11763	7200	2654	13038	7970	3419	12508	7661	3596	11024	7583	4019	10070	7506	4265
(2.5+5)+ (2.5+5)	12.0	18	12025	8249	2866	8666	6999	2166	8021	6461	2553	8856	7174	3303	8532	6859	3446	7992	6465	3698	7668	6150	3841
	14.0	20	12025	8249	2866	9312	6999	2166	8666	6528	2583	9504	7174	3339	9180	6938	3482	8532	6465	3734	8208	6228	3913
	16.0	22	12025	8778	2911	9957	6999	2195	9220	6528	2613	10152	7174	3375	9828	6938	3554	9180	6465	3805	8856	6228	3949
	18.0	25	12894	9413	2956	10602	7605	2223	9773	7067	2643	10800	7805	3411	10368	7490	3554	9720	7017	3841	9288	6701	3985
	19.0	27	13329	9730	3001	10971	8009	2252	10141	7403	2673	11232	8199	3446	10800	7884	3590	10152	7411	3841	9720	7096	3985
	22.0	30	14778	9624	3001	12170	7942	2252	11248	7336	2673	12420	8121	3482	11988	7805	3626	10800	7569	3985	10044	7411	4200
	24.0	32	15792	9624	3046	13000	7942	2280	11985	7336	2703	13284	8121	3482	12744	7805	3662	11232	7726	4093	10260	7647	4344
(2.5+3.5)+ (3.5+3.5)	12.0	18	11802	8097	2814	8506	6870	2127	7872	6341	2507	8692	7042	3243	8374	6732	3384	7844	6345	3631	7526	6036	3772
	14.0	20	11802	8097	2814	9139	6870	2127	8506	6407	2536	9328	7042	3278	9010	6809	3419	8374	6345	3666	8056	6113	3842
	16.0	22	11802	8616	2858	9773	6870	2155	9049	6407	2566	9964	7042	3314	9646	6809	3490	9010	6345	3737	8692	6113	3878
	18.0	25	12655	9238	2902	10406	7464	2183	9592	6936	2595	10600	7661	3349	10176	7351	3490	9540	6887	3772	9116	6577	3913
	19.0	27	13082	9550	2946	10768	7861	2211	9954	7266	2625	11024	8048	3384	10600	7738	3525	9964	7274	3772	9540	6964	3913
	22.0	30	14504	9446	2946	11944	7795	2211	11040	7200	2625	12190	7970	3419	11766	7661	3560	10600	7428	3913	9858	7274	4124
	24.0	32	15499	9446	2990	12759	7795	2239	11763	7200	2654	13038	7970	3419	12508	7661	3596	11024	7583	4019	10070	7506	4265

	INDOOR		OUTDOOR TEMPERATURE (°CDB)																				
	EWB	EDB	-10			21			27			32			35			40			43		
	°C	°C	TC	SHC	PI	TC	SHC	PI	TC	SHC	PI	TC	SHC	PI	TC	SHC	PI	TC	SHC	PI	TC	SHC	PI
(2.5+5)+ (3.5+3.5)	12.0	18	12025	8249	2866	8666	6999	2166	8021	6461	2553	8856	7174	3303	8532	6859	3446	7992	6465	3698	7668	6150	3841
	14.0	20	12025	8249	2866	9312	6999	2166	8666	6528	2583	9504	7174	3339	9180	6938	3482	8532	6465	3734	8208	6228	3913
	16.0	22	12025	8778	2911	9957	6999	2195	9220	6528	2613	10152	7174	3375	9828	6938	3554	9180	6465	3805	8856	6228	3949
	18.0	25	12894	9413	2956	10602	7605	2223	9773	7067	2643	10800	7805	3411	10368	7490	3554	9720	7017	3841	9288	6701	3985
	19.0	27	13329	9730	3001	10971	8009	2252	10141	7403	2673	11232	8199	3446	10800	7884	3590	10152	7411	3841	9720	7096	3985
	22.0	30	14778	9624	3001	12170	7942	2252	11248	7336	2673	12420	8121	3482	11988	7805	3626	10800	7569	3985	10044	7411	4200
	24.0	32	15792	9624	3046	13000	7942	2280	11985	7336	2703	13284	8121	3482	12744	7805	3662	11232	7726	4093	10260	7647	4344
(3.5+3.5)+ (3.5+3.5)	12.0	18	12025	8249	2866	8666	6999	2166	8021	6461	2553	8856	7174	3303	8532	6859	3446	7992	6465	3698	7668	6150	3841
	14.0	20	12025	8249	2866	9312	6999	2166	8666	6528	2583	9504	7174	3339	9180	6938	3482	8532	6465	3734	8208	6228	3913
	16.0	22	12025	8778	2911	9957	6999	2195	9220	6528	2613	10152	7174	3375	9828	6938	3554	9180	6465	3805	8856	6228	3949
	18.0	25	12894	9413	2956	10602	7605	2223	9773	7067	2643	10800	7805	3411	10368	7490	3554	9720	7017	3841	9288	6701	3985
	19.0	27	13329	9730	3001	10971	8009	2252	10141	7403	2673	11232	8199	3446	10800	7884	3590	10152	7411	3841	9720	7096	3985
	22.0	30	14778	9624	3001	12170	7942	2252	11248	7336	2673	12420	8121	3482	11988	7805	3626	10800	7569	3985	10044	7411	4200
	24.0	32	15792	9624	3046	13000	7942	2280	11985	7336	2703	13284	8121	3482	12744	7805	3662	11232	7726	4093	10260	7647	4344
(3.5+3.5)+ (3.5+5)	12.0	18	12693	8708	3026	9148	7388	2287	8467	6820	2695	9348	7573	3487	9006	7240	3638	8436	6824	3904	8094	6491	4055
	14.0	20	12693	8708	3026	9829	7388	2287	9148	6891	2727	10032	7573	3525	9690	7323	3676	9006	6824	3942	8664	6574	4131
	16.0	22	12693	9266	3073	10510	7388	2317	9732	6891	2758	10716	7573	3563	10374	7323	3752	9690	6824	4017	9348	6574	4169
	18.0	25	13610	9936	3121	11191	8028	2347	10316	7459	2790	11400	8239	3601	10944	7906	3752	10260	7407	4055	9804	7074	4207
	19.0	27	14069	10271	3168	11581	8454	2377	10705	7815	2822	11856	8655	3638	11400	8322	3790	10716	7823	4055	10260	7490	4207
	22.0	30	15599	10159	3168	12846	8383	2377	11873	7744	2822	13110	8572	3676	12654	8239	3828	11400	7989	4207	10602	7823	4434
	24.0	32	16669	10159	3215	13722	8383	2407	12651	7744	2854	14022	8572	3676	13452	8239	3866	11856	8156	4321	10830	8072	4586
(3.5+5)+ (3.5+5)	12.0	18	13361	9166	3186	9629	7777	2407	8912	7179	2837	9840	7972	3671	9480	7621	3830	8880	7183	4110	8520	6833	4269
	14.0	20	13361	9166	3186	10346	7777	2407	9629	7254	2871	10560	7972	3711	10200	7709	3870	9480	7183	4150	9120	6920	4349
	16.0	22	13361	9754	3236	11063	7777	2439	10244	7254	2904	11280	7972	3751	10920	7709	3950	10200	7183	4229	9840	6920	4389
	18.0	25	14327	10459	3285	11780	8450	2471	10859	7852	2937	12000	8672	3791	11520	8322	3950	10800	7796	4269	10320	7446	4429
	19.0	27	14810	10811	3335	12190	8899	2502	11268	8226	2971	12480	9110	3830	12000	8760	3990	11280	8234	4269	10800	7884	4429
	22.0	30	16420	10694	3335	13522	8824	2502	12498	8151	2971	13800	9023	3870	13320	8672	4030	12000	8410	4429	11160	8234	4668
	24.0	32	17546	10694	3385	14444	8824	2534	13317	8151	3004	14760	9023	3870	14160	8672	4070	12480	8585	4549	11400	8497	4828
(1.2+1.2)+ (1.2+1.2+1.2)	12.0	18	6680	4583	1413	4815	3889	1068	4456	3589	1259	4920	3986	1628	4740	3811	1699	4440	3592	1823	4260	3416	1894
	14.0	20	6680	4583	1413	5173	3889	1068	4815	3627	1273	5280	3986	1646	5100	3854	1717	4740	3592	1841	4560	3460	1929
	16.0	22	6680	4877	1435	5532	3889	1082	5122	3627	1288	5640	3986	1664	5460	3854	1752	5100	3592	1876	4920	3460	1947
	18.0	25	7163	5229	1457	5890	4225	1096	5429	3926	1303	6000	4336	1682	5760	4161	1752	5400	3898	1894	5160	3723	1965
	19.0	27	7405	5406	1479	6095	4449	1110	5634	4113	1318	6240	4555	1699	6000	4380	1770	5640	4117	1894	5400	3942	1965
	22.0	30	8210	5347	1479	6761	4412	1110	6249	4076	1318	6900	4511	1717	6660	4336	1788	6000	4205	1965	5580	4117	2071
	24.0	32	8773	5347	1502	7222	4412	1124	6659	4076	1333	7380	4511	1717	7080	4336	1805	6240	4292	2018	5700	4249	2142
(1.2+1.2)+ (1.2+1.2+1.8)	12.0	18	7349	5041	1549	5296	4277	1171	4902	3948	1380	5412	4384	1785	5214	4192	1862	4884	3951	1998	4686	3758	2076
	14.0	20	7349	5041	1549	5690	4277	1171	5296	3990	1396	5808	4384	1804	5610	4240	1882	5214	3951	2018	5016	3806	2115
	16.0	22	7349	5364	1573	6085	4277	1186	5634	3990	1412	6204	4384	1824	6006	4240	1921	5610	3951	2056	5412	3806	2134
	18.0	25	7880	5752	1597	6479	4648	1201	5972	4319	1428	6600	4770	1843	6336	4577	1921	5940	4288	2076	5676	4095	2153
	19.0	27	8145	5946	1622	6705	4894	1217	6198	4524	1444	6864	5011	1862	6600	4818	1940	6204	4529	2076	5940	4336	2153
	22.0	30	9031	5881	1622	7437	4853	1217	6874	4483	1444	7590	4963	1882	7326	4770	1959	6600	4625	2153	6138	4529	2270
	24.0	32	9650	5881	1646	7944	4853	1232	7324	4483	1461	8118	4963	1882	7788	4770	1979	6864	4722	2212	6270	4673	2347
(1.2+1.2)+ (1.2+1.2+2.5)	12.0	18	8128	5576	1709	5858	4731	1291	5422	4367	1522	5986	4849	1969	5767	4636	2054	5402	4370	2204	5183	4157	2290
	14.0	20	8128	5576	1709	6294	4731	1291	5858	4413	1540	6424	4849	1990	6205	4690	2076	5767	4370	2226	5548	4210	2333
	16.0	22	8128	5933	1735	6730	4731	1308	6232	4413	1558	6862	4849	2012	6643	4690	2119	6205	4370	2268	5986	4210	2354
	18.0	25	8715	6362	1762	7166	5141	1325	6606	4777	1575	7300	5276	2033	7008	5063	2119	6570	4743	2290	6278	4530	2375
	19.0	27	9009	6577	1789	7416	5413	1342	6855	5004	1593	7592	5542	2054	7300	5329	2140	6862	5009	2290	6570	4796	2375
	22.0	30	9989	6505	1789	8226	5368	1342	7603	4959	1593	8395	5489	2076	8103	5276	2161	7300	5116	2375	6789	5009	2504
	24.0	32	10674	6505	1815	8787	5368	1359	8101	4959	1611	8979	5489	2076	8614	5276	2183	7592	5222	2440	6935	5169	2589

	INDOOR		OUTDOOR TEMPERATURE (°CDB)																				
	EWB	EDB	-10			21			27			32			35			40			43		
	°C	°C	TC	SHC	PI	TC	SHC	PI	TC	SHC	PI	TC	SHC	PI	TC	SHC	PI	TC	SHC	PI	TC	SHC	PI
(1.2+1.2)+ (1.2+1.2+3.5)	12.0	18	9241	6340	1769	6660	5379	1336	6164	4965	1575	6806	5514	2038	6557	5271	2126	6142	4968	2281	5893	4726	2370
	14.0	20	9241	6340	1769	7156	5379	1336	6660	5017	1594	7304	5514	2060	7055	5332	2149	6557	4968	2304	6308	4787	2414
	16.0	22	9241	6746	1796	7652	5379	1354	7085	5017	1612	7802	5514	2082	7553	5332	2193	7055	4968	2348	6806	4787	2437
	18.0	25	9909	7234	1824	8148	5845	1372	7510	5431	1631	8300	5998	2104	7968	5756	2193	7470	5393	2370	7138	5150	2459
	19.0	27	10243	7478	1851	8432	6155	1389	7794	5690	1649	8632	6301	2126	8300	6059	2215	7802	5695	2370	7470	5453	2459
	22.0	30	11357	7396	1851	9353	6103	1389	8644	5638	1649	9545	6241	2149	9213	5998	2237	8300	5817	2459	7719	5695	2592
	24.0	32	12136	7396	1879	9990	6103	1407	9211	5638	1668	10209	6241	2149	9794	5998	2259	8632	5938	2525	7885	5877	2680
(1.2+1.2)+ (1.2+1.2+5)	12.0	18	9687	6645	2224	6981	5638	1680	6461	5205	1980	7134	5779	2562	6873	5525	2674	6438	5208	2869	6177	4954	2980
	14.0	20	9687	6645	2224	7501	5638	1680	6981	5259	2004	7656	5779	2590	7395	5589	2701	6873	5208	2896	6612	5017	3036
	16.0	22	9687	7071	2258	8021	5638	1702	7427	5259	2027	8178	5779	2618	7917	5589	2757	7395	5208	2952	7134	5017	3064
	18.0	25	10387	7582	2293	8541	6126	1725	7872	5693	2050	8700	6287	2646	8352	6033	2757	7830	5652	2980	7482	5398	3091
	19.0	27	10737	7838	2328	8838	6452	1747	8170	5964	2074	9048	6605	2674	8700	6351	2785	8178	5970	2980	7830	5716	3091
	22.0	30	11904	7753	2328	9803	6397	1747	9061	5910	2074	10005	6542	2701	9657	6287	2813	8700	6097	3091	8091	5970	3258
	24.0	32	12721	7753	2363	10472	6397	1769	9655	5910	2097	10701	6542	2701	10266	6287	2841	9048	6224	3175	8265	6160	3370
(1.2+1.2)+ (1.2+1.8+1.8)	12.0	18	8017	5500	1685	5778	4666	1273	5347	4307	1500	5904	4783	1941	5688	4573	2026	5328	4310	2173	5112	4100	2258
	14.0	20	8017	5500	1685	6208	4666	1273	5778	4352	1518	6336	4783	1962	6120	4625	2047	5688	4310	2194	5472	4152	2300
	16.0	22	8017	5852	1711	6638	4666	1290	6146	4352	1536	6768	4783	1983	6552	4625	2089	6120	4310	2237	5904	4152	2321
	18.0	25	8596	6275	1737	7068	5070	1307	6515	4711	1553	7200	5203	2005	6912	4993	2089	6480	4678	2258	6192	4468	2342
	19.0	27	8886	6487	1764	7314	5339	1323	6761	4936	1571	7488	5466	2026	7200	5256	2110	6768	4941	2258	6480	4730	2342
	22.0	30	9852	6416	1764	8113	5294	1323	7499	4891	1571	8280	5414	2047	7992	5203	2131	7200	5046	2342	6696	4941	2469
	24.0	32	10528	6416	1790	8666	5294	1340	7990	4891	1589	8856	5414	2047	8496	5203	2152	7488	5151	2405	6840	5098	2553
(1.2+1.2)+ (1.2+1.8+2.5)	12.0	18	8796	6034	1972	6339	5120	1490	5867	4726	1756	6478	5248	2272	6241	5017	2371	5846	4729	2544	5609	4498	2643
	14.0	20	8796	6034	1972	6811	5120	1490	6339	4775	1777	6952	5248	2297	6715	5075	2396	6241	4729	2569	6004	4556	2692
	16.0	22	8796	6421	2003	7283	5120	1510	6744	4775	1798	7426	5248	2322	7189	5075	2445	6715	4729	2618	6478	4556	2717
	18.0	25	9432	6885	2034	7755	5563	1530	7149	5169	1818	7900	5709	2347	7584	5479	2445	7110	5133	2643	6794	4902	2742
	19.0	27	9750	7117	2065	8025	5858	1549	7418	5415	1839	8216	5998	2371	7900	5767	2470	7426	5421	2643	7110	5190	2742
	22.0	30	10810	7040	2065	8902	5809	1549	8228	5366	1839	9085	5940	2396	8769	5709	2495	7900	5536	2742	7347	5421	2890
	24.0	32	11551	7040	2095	9509	5809	1569	8767	5366	1860	9717	5940	2396	9322	5709	2519	8216	5652	2816	7505	5594	2989
(1.2+1.2)+ (1.2+1.8+3.5)	12.0	18	9687	6645	2164	6981	5638	1635	6461	5205	1927	7134	5779	2493	6873	5525	2602	6438	5208	2791	6177	4954	2900
	14.0	20	9687	6645	2164	7501	5638	1635	6981	5259	1950	7656	5779	2520	7395	5589	2629	6873	5208	2818	6612	5017	2954
	16.0	22	9687	7071	2198	8021	5638	1657	7427	5259	1972	8178	5779	2547	7917	5589	2683	7395	5208	2873	7134	5017	2981
	18.0	25	10387	7582	2231	8541	6126	1678	7872	5693	1995	8700	6287	2575	8352	6033	2683	7830	5652	2900	7482	5398	3008
	19.0	27	10737	7838	2265	8838	6452	1700	8170	5964	2018	9048	6605	2602	8700	6351	2710	8178	5970	2900	7830	5716	3008
	22.0	30	11904	7753	2265	9803	6397	1700	9061	5910	2018	10005	6542	2629	9657	6287	2737	8700	6097	3008	8091	5970	3171
	24.0	32	12721	7753	2299	10472	6397	1721	9655	5910	2040	10701	6542	2629	10266	6287	2764	9048	6224	3089	8265	6160	3279
(1.2+1.2)+ (1.2+1.8+5)	12.0	18	9687	6645	2224	6981	5638	1680	6461	5205	1980	7134	5779	2562	6873	5525	2674	6438	5208	2869	6177	4954	2980
	14.0	20	9687	6645	2224	7501	5638	1680	6981	5259	2004	7656	5779	2590	7395	5589	2701	6873	5208	2896	6612	5017	3036
	16.0	22	9687	7071	2258	8021	5638	1702	7427	5259	2027	8178	5779	2618	7917	5589	2757	7395	5208	2952	7134	5017	3064
	18.0	25	10387	7582	2293	8541	6126	1725	7872	5693	2050	8700	6287	2646	8352	6033	2757	7830	5652	2980	7482	5398	3091
	19.0	27	10737	7838	2328	8838	6452	1747	8170	5964	2074	9048	6605	2674	8700	6351	2785	8178	5970	2980	7830	5716	3091
	22.0	30	11904	7753	2328	9803	6397	1747	9061	5910	2074	10005	6542	2701	9657	6287	2813	8700	6097	3091	8091	5970	3258
	24.0	32	12721	7753	2363	10472	6397	1769	9655	5910	2097	10701	6542	2701	10266	6287	2841	9048	6224	3175	8265	6160	3370
(1.2+1.2)+ (1.2+2.5+2.5)	12.0	18	9575	6569	2164	6901	5574	1635	6387	5145	1927	7052	5713	2493	6794	5462	2602	6364	5148	2791	6106	4897	2900
	14.0	20	9575	6569	2164	7415	5574	1635	6901	5198	1950	7568	5713	2520	7310	5525	2629	6794	5148	2818	6536	4960	2954
	16.0	22	9575	6990	2198	7929	5574	1657	7341	5198	1972	8084	5713	2547	7826	5525	2683	7310	5148	2873	7052	4960	2981
	18.0	25	10268	7495	2231	8443	6056	1678	7782	5627	1995	8600	6215	2575	8256	5964	2683	7740	5587	2900	7396	5336	3008
	19.0	27	10614	7748	2265	8736	6378	1700	8076	5895	2018	8944	6529	2602	8600	6278	2710	8084	5901	2900	7740	5650	3008
	22.0	30	11767	7664	2265	9691	6324	1700	8957	5842	2018	9890	6466	2629	9546	6215	2737	8600	6027	3008	7998	5901	3171
	24.0	32	12575	7664	2299	10351	6324	1721	9544	5842	2040	10578	6466	2629	10148	6215	2764	8944	6152	3089	8170	6090	3279

	INDOOR		OUTDOOR TEMPERATURE (°CDB)																				
	EWB	EDB	-10			21			27			32			35			40			43		
	°C	°C	TC	SHC	PI	TC	SHC	PI	TC	SHC	PI	TC	SHC	PI	TC	SHC	PI	TC	SHC	PI	TC	SHC	PI
(1.2+1.2)+ (1.2+2.5+3.5)	12.0	18	9687	6645	2224	6981	5638	1680	6461	5205	1980	7134	5779	2562	6873	5525	2674	6438	5208	2869	6177	4954	2980
	14.0	20	9687	6645	2224	7501	5638	1680	6981	5259	2004	7656	5779	2590	7395	5589	2701	6873	5208	2896	6612	5017	3036
	16.0	22	9687	7071	2258	8021	5638	1702	7427	5259	2027	8178	5779	2618	7917	5589	2757	7395	5208	2952	7134	5017	3064
	18.0	25	10387	7582	2293	8541	6126	1725	7872	5693	2050	8700	6287	2646	8352	6033	2757	7830	5652	2980	7482	5398	3091
	19.0	27	10737	7838	2328	8838	6452	1747	8170	5964	2074	9048	6605	2674	8700	6351	2785	8178	5970	2980	7830	5716	3091
	22.0	30	11904	7753	2328	9803	6397	1747	9061	5910	2074	10005	6542	2701	9657	6287	2813	8700	6097	3091	8091	5970	3258
	24.0	32	12721	7753	2363	10472	6397	1769	9655	5910	2097	10701	6542	2701	10266	6287	2841	9048	6224	3175	8265	6160	3370
(1.2+1.2)+ (1.2+3.5+3.5)	12.0	18	9687	6645	2224	6981	5638	1680	6461	5205	1980	7134	5779	2562	6873	5525	2674	6438	5208	2869	6177	4954	2980
	14.0	20	9687	6645	2224	7501	5638	1680	6981	5259	2004	7656	5779	2590	7395	5589	2701	6873	5208	2896	6612	5017	3036
	16.0	22	9687	7071	2258	8021	5638	1702	7427	5259	2027	8178	5779	2618	7917	5589	2757	7395	5208	2952	7134	5017	3064
	18.0	25	10387	7582	2293	8541	6126	1725	7872	5693	2050	8700	6287	2646	8352	6033	2757	7830	5652	2980	7482	5398	3091
	19.0	27	10737	7838	2328	8838	6452	1747	8170	5964	2074	9048	6605	2674	8700	6351	2785	8178	5970	2980	7830	5716	3091
	22.0	30	11904	7753	2328	9803	6397	1747	9061	5910	2074	10005	6542	2701	9657	6287	2813	8700	6097	3091	8091	5970	3258
	24.0	32	12721	7753	2363	10472	6397	1769	9655	5910	2097	10701	6542	2701	10266	6287	2841	9048	6224	3175	8265	6160	3370
(1.2+1.2)+ (1.8+1.8+1.8)	12.0	18	8685	5958	1972	6259	5055	1490	5793	4666	1756	6396	5182	2272	6162	4954	2371	5772	4669	2544	5538	4441	2643
	14.0	20	8685	5958	1972	6725	5055	1490	6259	4715	1777	6864	5182	2297	6630	5011	2396	6162	4669	2569	5928	4498	2692
	16.0	22	8685	6340	2003	7191	5055	1510	6659	4715	1798	7332	5182	2322	7098	5011	2445	6630	4669	2618	6396	4498	2717
	18.0	25	9312	6798	2034	7657	5493	1530	7058	5104	1818	7800	5637	2347	7488	5409	2445	7020	5068	2643	6708	4840	2742
	19.0	27	9626	7027	2065	7924	5784	1549	7324	5347	1839	8112	5922	2371	7800	5694	2470	7332	5352	2643	7020	5125	2742
	22.0	30	10673	6951	2065	8789	5736	1549	8123	5298	1839	8970	5865	2396	8658	5637	2495	7800	5466	2742	7254	5352	2890
	24.0	32	11405	6951	2095	9389	5736	1569	8656	5298	1860	9594	5865	2396	9204	5637	2519	8112	5580	2816	7410	5523	2989
(1.2+1.2)+ (1.8+1.8+2.5)	12.0	18	9464	6493	2164	6821	5509	1635	6313	5085	1927	6970	5647	2493	6715	5398	2602	6290	5088	2791	6035	4840	2900
	14.0	20	9464	6493	2164	7329	5509	1635	6821	5138	1950	7480	5647	2520	7225	5460	2629	6715	5088	2818	6460	4902	2954
	16.0	22	9464	6909	2198	7837	5509	1657	7256	5138	1972	7990	5647	2547	7735	5460	2683	7225	5088	2873	6970	4902	2981
	18.0	25	10148	7408	2231	8345	5986	1678	7691	5562	1995	8500	6143	2575	8160	5895	2683	7650	5522	2900	7310	5274	3008
	19.0	27	10490	7658	2265	8635	6303	1700	7982	5827	2018	8840	6453	2602	8500	6205	2710	7990	5833	2900	7650	5585	3008
	22.0	30	11630	7575	2265	9578	6250	1700	8852	5774	2018	9775	6391	2629	9435	6143	2737	8500	5957	3008	7905	5833	3171
	24.0	32	12429	7575	2299	10231	6250	1721	9433	5774	2040	10455	6391	2629	10030	6143	2764	8840	6081	3089	8075	6019	3279
(1.2+1.2)+ (1.8+1.8+3.5)	12.0	18	9687	6645	2224	6981	5638	1680	6461	5205	1980	7134	5779	2562	6873	5525	2674	6438	5208	2869	6177	4954	2980
	14.0	20	9687	6645	2224	7501	5638	1680	6981	5259	2004	7656	5779	2590	7395	5589	2701	6873	5208	2896	6612	5017	3036
	16.0	22	9687	7071	2258	8021	5638	1702	7427	5259	2027	8178	5779	2618	7917	5589	2757	7395	5208	2952	7134	5017	3064
	18.0	25	10387	7582	2293	8541	6126	1725	7872	5693	2050	8700	6287	2646	8352	6033	2757	7830	5652	2980	7482	5398	3091
	19.0	27	10737	7838	2328	8838	6452	1747	8170	5964	2074	9048	6605	2674	8700	6351	2785	8178	5970	2980	7830	5716	3091
	22.0	30	11904	7753	2328	9803	6397	1747	9061	5910	2074	10005	6542	2701	9657	6287	2813	8700	6097	3091	8091	5970	3258
	24.0	32	12721	7753	2363	10472	6397	1769	9655	5910	2097	10701	6542	2701	10266	6287	2841	9048	6224	3175	8265	6160	3370
(1.2+1.2)+ (1.8+1.8+5)	12.0	18	9687	6645	2224	6981	5638	1680	6461	5205	1980	7134	5779	2562	6873	5525	2674	6438	5208	2869	6177	4954	2980
	14.0	20	9687	6645	2224	7501	5638	1680	6981	5259	2004	7656	5779	2590	7395	5589	2701	6873	5208	2896	6612	5017	3036
	16.0	22	9687	7071	2258	8021	5638	1702	7427	5259	2027	8178	5779	2618	7917	5589	2757	7395	5208	2952	7134	5017	3064
	18.0	25	10387	7582	2293	8541	6126	1725	7872	5693	2050	8700	6287	2646	8352	6033	2757	7830	5652	2980	7482	5398	3091
	19.0	27	10737	7838	2328	8838	6452	1747	8170	5964	2074	9048	6605	2674	8700	6351	2785	8178	5970	2980	7830	5716	3091
	22.0	30	11904	7753	2328	9803	6397	1747	9061	5910	2074	10005	6542	2701	9657	6287	2813	8700	6097	3091	8091	5970	3258
	24.0	32	12721	7753	2363	10472	6397	1769	9655	5910	2097	10701	6542	2701	10266	6287	2841	9048	6224	3175	8265	6160	3370
(1.2+1.2)+ (1.8+2.5+2.5)	12.0	18	9687	6645	2224	6981	5638	1680	6461	5205	1980	7134	5779	2562	6873	5525	2674	6438	5208	2869	6177	4954	2980
	14.0	20	9687	6645	2224	7501	5638	1680	6981	5259	2004	7656	5779	2590	7395	5589	2701	6873	5208	2896	6612	5017	3036
	16.0	22	9687	7071	2258	8021	5638	1702	7427	5259	2027	8178	5779	2618	7917	5589	2757	7395	5208	2952	7134	5017	3064
	18.0	25	10387	7582	2293	8541	6126	1725	7872	5693	2050	8700	6287	2646	8352	6033	2757	7830	5652	2980	7482	5398	3091
	19.0	27	10737	7838	2328	8838	6452	1747	8170	5964	2074	9048	6605	2674	8700	6351	2785	8178	5970	2980	7830	5716	3091
	22.0	30	11904	7753	2328	9803	6397	1747	9061	5910	2074	10005	6542	2701	9657	6287	2813	8700	6097	3091	8091	5970	3258
	24.0	32	12721	7753	2363	10472	6397	1769	9655	5910	2097	10701	6542	2701	10266	6287	2841	9048	6224	3175	8265	6160	3370

	INDOOR		OUTDOOR TEMPERATURE (°CDB)																				
	EWB	EDB	-10			21			27			32			35			40			43		
	°C	°C	TC	SHC	PI	TC	SHC	PI	TC	SHC	PI	TC	SHC	PI	TC	SHC	PI	TC	SHC	PI	TC	SHC	PI
(1.2+1.2)+ (1.8+2.5+3.5)	12.0	18	9687	6645	2224	6981	5638	1680	6461	5205	1980	7134	5779	2562	6873	5525	2674	6438	5208	2869	6177	4954	2980
	14.0	20	9687	6645	2224	7501	5638	1680	6981	5259	2004	7656	5779	2590	7395	5589	2701	6873	5208	2896	6612	5017	3036
	16.0	22	9687	7071	2258	8021	5638	1702	7427	5259	2027	8178	5779	2618	7917	5589	2757	7395	5208	2952	7134	5017	3064
	18.0	25	10387	7582	2293	8541	6126	1725	7872	5693	2050	8700	6287	2646	8352	6033	2757	7830	5652	2980	7482	5398	3091
	19.0	27	10737	7838	2328	8838	6452	1747	8170	5964	2074	9048	6605	2674	8700	6351	2785	8178	5970	2980	7830	5716	3091
	22.0	30	11904	7753	2328	9803	6397	1747	9061	5910	2074	10005	6542	2701	9657	6287	2813	8700	6097	3091	8091	5970	3258
	24.0	32	12721	7753	2363	10472	6397	1769	9655	5910	2097	10701	6542	2701	10266	6287	2841	9048	6224	3175	8265	6160	3370
(1.2+1.2)+ (1.8+3.5+3.5)	12.0	18	9687	6645	2224	6981	5638	1680	6461	5205	1980	7134	5779	2562	6873	5525	2674	6438	5208	2869	6177	4954	2980
	14.0	20	9687	6645	2224	7501	5638	1680	6981	5259	2004	7656	5779	2590	7395	5589	2701	6873	5208	2896	6612	5017	3036
	16.0	22	9687	7071	2258	8021	5638	1702	7427	5259	2027	8178	5779	2618	7917	5589	2757	7395	5208	2952	7134	5017	3064
	18.0	25	10387	7582	2293	8541	6126	1725	7872	5693	2050	8700	6287	2646	8352	6033	2757	7830	5652	2980	7482	5398	3091
	19.0	27	10737	7838	2328	8838	6452	1747	8170	5964	2074	9048	6605	2674	8700	6351	2785	8178	5970	2980	7830	5716	3091
	22.0	30	11904	7753	2328	9803	6397	1747	9061	5910	2074	10005	6542	2701	9657	6287	2813	8700	6097	3091	8091	5970	3258
	24.0	32	12721	7753	2363	10472	6397	1769	9655	5910	2097	10701	6542	2701	10266	6287	2841	9048	6224	3175	8265	6160	3370
(1.2+1.2)+ (2.5+2.5+2.5)	12.0	18	9687	6645	2224	6981	5638	1680	6461	5205	1980	7134	5779	2562	6873	5525	2674	6438	5208	2869	6177	4954	2980
	14.0	20	9687	6645	2224	7501	5638	1680	6981	5259	2004	7656	5779	2590	7395	5589	2701	6873	5208	2896	6612	5017	3036
	16.0	22	9687	7071	2258	8021	5638	1702	7427	5259	2027	8178	5779	2618	7917	5589	2757	7395	5208	2952	7134	5017	3064
	18.0	25	10387	7582	2293	8541	6126	1725	7872	5693	2050	8700	6287	2646	8352	6033	2757	7830	5652	2980	7482	5398	3091
	19.0	27	10737	7838	2328	8838	6452	1747	8170	5964	2074	9048	6605	2674	8700	6351	2785	8178	5970	2980	7830	5716	3091
	22.0	30	11904	7753	2328	9803	6397	1747	9061	5910	2074	10005	6542	2701	9657	6287	2813	8700	6097	3091	8091	5970	3258
	24.0	32	12721	7753	2363	10472	6397	1769	9655	5910	2097	10701	6542	2701	10266	6287	2841	9048	6224	3175	8265	6160	3370
(1.2+1.2)+ (2.5+2.5+3.5)	12.0	18	9687	6645	2224	6981	5638	1680	6461	5205	1980	7134	5779	2562	6873	5525	2674	6438	5208	2869	6177	4954	2980
	14.0	20	9687	6645	2224	7501	5638	1680	6981	5259	2004	7656	5779	2590	7395	5589	2701	6873	5208	2896	6612	5017	3036
	16.0	22	9687	7071	2258	8021	5638	1702	7427	5259	2027	8178	5779	2618	7917	5589	2757	7395	5208	2952	7134	5017	3064
	18.0	25	10387	7582	2293	8541	6126	1725	7872	5693	2050	8700	6287	2646	8352	6033	2757	7830	5652	2980	7482	5398	3091
	19.0	27	10737	7838	2328	8838	6452	1747	8170	5964	2074	9048	6605	2674	8700	6351	2785	8178	5970	2980	7830	5716	3091
	22.0	30	11904	7753	2328	9803	6397	1747	9061	5910	2074	10005	6542	2701	9657	6287	2813	8700	6097	3091	8091	5970	3258
	24.0	32	12721	7753	2363	10472	6397	1769	9655	5910	2097	10701	6542	2701	10266	6287	2841	9048	6224	3175	8265	6160	3370
(1.2+1.8)+ (1.2+1.2+1.2)	12.0	18	7349	5041	1597	5296	4277	1207	4902	3948	1422	5412	4384	1840	5214	4192	1920	4884	3951	2060	4686	3758	2140
	14.0	20	7349	5041	1597	5690	4277	1207	5296	3990	1439	5808	4384	1860	5610	4240	1940	5214	3951	2080	5016	3806	2180
	16.0	22	7349	5364	1622	6085	4277	1223	5634	3990	1456	6204	4384	1880	6006	4240	1980	5610	3951	2120	5412	3806	2200
	18.0	25	7880	5752	1647	6479	4648	1238	5972	4319	1472	6600	4770	1900	6336	4577	1980	5940	4288	2140	5676	4095	2220
	19.0	27	8145	5946	1672	6705	4894	1254	6198	4524	1489	6864	5011	1920	6600	4818	2000	6204	4529	2140	5940	4336	2220
	22.0	30	9031	5881	1672	7437	4853	1254	6874	4483	1489	7590	4963	1940	7326	4770	2020	6600	4625	2220	6138	4529	2340
	24.0	32	9650	5881	1697	7944	4853	1270	7324	4483	1506	8118	4963	1940	7788	4770	2040	6864	4722	2280	6270	4673	2420
(1.2+1.8)+ (1.2+1.2+1.8)	12.0	18	8017	5500	1733	5778	4666	1309	5347	4307	1543	5904	4783	1996	5688	4573	2083	5328	4310	2235	5112	4100	2322
	14.0	20	8017	5500	1733	6208	4666	1309	5778	4352	1561	6336	4783	2018	6120	4625	2105	5688	4310	2257	5472	4152	2365
	16.0	22	8017	5852	1760	6638	4666	1327	6146	4352	1579	6768	4783	2040	6552	4625	2148	6120	4310	2300	5904	4152	2387
	18.0	25	8596	6275	1787	7068	5070	1344	6515	4711	1598	7200	5203	2062	6912	4993	2148	6480	4678	2322	6192	4468	2409
	19.0	27	8886	6487	1814	7314	5339	1361	6761	4936	1616	7488	5466	2083	7200	5256	2170	6768	4941	2322	6480	4730	2409
	22.0	30	9852	6416	1814	8113	5294	1361	7499	4891	1616	8280	5414	2105	7992	5203	2192	7200	5046	2409	6696	4941	2539
	24.0	32	10528	6416	1841	8666	5294	1378	7990	4891	1634	8856	5414	2105	8496	5203	2213	7488	5151	2474	6840	5098	2626
(1.2+1.8)+ (1.2+1.2+2.5)	12.0	18	8796	6034	1892	6339	5120	1430	5867	4726	1685	6478	5248	2180	6241	5017	2275	5846	4729	2441	5609	4498	2536
	14.0	20	8796	6034	1892	6811	5120	1430	6339	4775	1705	6952	5248	2204	6715	5075	2299	6241	4729	2465	6004	4556	2583
	16.0	22	8796	6421	1922	7283	5120	1449	6744	4775	1725	7426	5248	2228	7189	5075	2346	6715	4729	2512	6478	4556	2607
	18.0	25	9432	6885	1951	7755	5563	1468	7149	5169	1745	7900	5709	2252	7584	5479	2346	7110	5133	2536	6794	4902	2631
	19.0	27	9750	7117	1981	8025	5858	1486	7418	5415	1765	8216	5998	2275	7900	5767	2370	7426	5421	2536	7110	5190	2631
	22.0	30	10810	7040	1981	8902	5809	1486	8228	5366	1765	9085	5940	2299	8769	5709	2394	7900	5536	2631	7347	5421	2773
	24.0	32	11551	7040	2011	9509	5809	1505	8767	5366	1784	9717	5940	2299	9322	5709	2417	8216	5652	2702	7505	5594	2868

	INDOOR		OUTDOOR TEMPERATURE (°CDB)																				
	EWB	EDB	-10			21			27			32			35			40			43		
	°C	°C	TC	SHC	PI	TC	SHC	PI	TC	SHC	PI	TC	SHC	PI	TC	SHC	PI	TC	SHC	PI	TC	SHC	PI
(1.2+1.8)+ (1.2+1.2+3.5)	12.0	18	9909	6798	1952	7142	5768	1475	6610	5324	1739	7298	5912	2249	7031	5652	2347	6586	5328	2518	6319	5068	2616
	14.0	20	9909	6798	1952	7674	5768	1475	7142	5380	1759	7832	5912	2274	7565	5717	2372	7031	5328	2543	6764	5133	2665
	16.0	22	9909	7234	1983	8205	5768	1495	7598	5380	1780	8366	5912	2298	8099	5717	2421	7565	5328	2592	7298	5133	2690
	18.0	25	10626	7757	2013	8737	6267	1514	8053	5824	1800	8900	6432	2323	8544	6172	2421	8010	5782	2616	7654	5522	2714
	19.0	27	10984	8018	2044	9041	6600	1533	8357	6101	1820	9256	6757	2347	8900	6497	2445	8366	6107	2616	8010	5847	2714
	22.0	30	12178	7931	2044	10029	6545	1533	9269	6045	1820	10235	6692	2372	9879	6432	2469	8900	6237	2714	8277	6107	2861
	24.0	32	13014	7931	2074	10713	6545	1553	9877	6045	1841	10947	6692	2372	10502	6432	2494	9256	6367	2787	8455	6302	2958
(1.2+1.8)+ (1.2+1.2+5)	12.0	18	10355	7104	2407	7463	6027	1819	6907	5564	2144	7626	6178	2774	7347	5906	2894	6882	5567	3105	6603	5295	3226
	14.0	20	10355	7104	2407	8018	6027	1819	7463	5622	2169	8184	6178	2804	7905	5974	2925	7347	5567	3136	7068	5363	3286
	16.0	22	10355	7559	2445	8574	6027	1843	7939	5622	2194	8742	6178	2834	8463	5974	2985	7905	5567	3196	7626	5363	3317
	18.0	25	11103	8105	2483	9130	6549	1867	8415	6085	2220	9300	6721	2864	8928	6450	2985	8370	6042	3226	7998	5771	3347
	19.0	27	11478	8379	2520	9447	6897	1891	8733	6375	2245	9672	7061	2894	9300	6789	3015	8742	6382	3226	8370	6110	3347
	22.0	30	12725	8288	2520	10480	6839	1891	9686	6317	2245	10695	6993	2925	10323	6721	3045	9300	6517	3347	8649	6382	3528
	24.0	32	13598	8288	2558	11194	6839	1915	10321	6317	2270	11439	6993	2925	10974	6721	3075	9672	6653	3437	8835	6585	3648
(1.2+1.8)+ (1.2+1.8+1.8)	12.0	18	8685	5958	1868	6259	5055	1412	5793	4666	1664	6396	5182	2153	6162	4954	2246	5772	4669	2410	5538	4441	2504
	14.0	20	8685	5958	1868	6725	5055	1412	6259	4715	1684	6864	5182	2176	6630	5011	2270	6162	4669	2434	5928	4498	2551
	16.0	22	8685	6340	1898	7191	5055	1430	6659	4715	1703	7332	5182	2200	7098	5011	2317	6630	4669	2480	6396	4498	2574
	18.0	25	9312	6798	1927	7657	5493	1449	7058	5104	1723	7800	5637	2223	7488	5409	2317	7020	5068	2504	6708	4840	2597
	19.0	27	9626	7027	1956	7924	5784	1468	7324	5347	1742	8112	5922	2246	7800	5694	2340	7332	5352	2504	7020	5125	2597
	22.0	30	10673	6951	1956	8789	5736	1468	8123	5298	1742	8970	5865	2270	8658	5637	2363	7800	5466	2597	7254	5352	2738
	24.0	32	11405	6951	1985	9389	5736	1486	8656	5298	1762	9594	5865	2270	9204	5637	2387	8112	5580	2668	7410	5523	2831
(1.2+1.8)+ (1.2+1.8+2.5)	12.0	18	9464	6493	2156	6821	5509	1629	6313	5085	1920	6970	5647	2484	6715	5398	2592	6290	5088	2781	6035	4840	2889
	14.0	20	9464	6493	2156	7329	5509	1629	6821	5138	1943	7480	5647	2511	7225	5460	2619	6715	5088	2808	6460	4902	2943
	16.0	22	9464	6909	2189	7837	5509	1651	7256	5138	1965	7990	5647	2538	7735	5460	2673	7225	5088	2862	6970	4902	2970
	18.0	25	10148	7408	2223	8345	5986	1672	7691	5562	1988	8500	6143	2565	8160	5895	2673	7650	5522	2889	7310	5274	2997
	19.0	27	10490	7658	2257	8635	6303	1693	7982	5827	2010	8840	6453	2592	8500	6205	2700	7990	5833	2889	7650	5585	2997
	22.0	30	11630	7575	2257	9578	6250	1693	8852	5774	2010	9775	6391	2619	9435	6143	2727	8500	5957	2997	7905	5833	3159
	24.0	32	12429	7575	2291	10231	6250	1715	9433	5774	2033	10455	6391	2619	10030	6143	2754	8840	6081	3078	8075	6019	3267
(1.2+1.8)+ (1.2+1.8+3.5)	12.0	18	10355	7104	2347	7463	6027	1774	6907	5564	2091	7626	6178	2705	7347	5906	2822	6882	5567	3028	6603	5295	3146
	14.0	20	10355	7104	2347	8018	6027	1774	7463	5622	2115	8184	6178	2734	7905	5974	2852	7347	5567	3058	7068	5363	3205
	16.0	22	10355	7559	2384	8574	6027	1797	7939	5622	2140	8742	6178	2764	8463	5974	2911	7905	5567	3116	7626	5363	3234
	18.0	25	11103	8105	2421	9130	6549	1821	8415	6085	2164	9300	6721	2793	8928	6450	2911	8370	6042	3146	7998	5771	3263
	19.0	27	11478	8379	2457	9447	6897	1844	8733	6375	2189	9672	7061	2822	9300	6789	2940	8742	6382	3146	8370	6110	3263
	22.0	30	12725	8288	2457	10480	6839	1844	9686	6317	2189	10695	6993	2852	10323	6721	2969	9300	6517	3263	8649	6382	3440
	24.0	32	13598	8288	2494	11194	6839	1867	10321	6317	2214	11439	6993	2852	10974	6721	2999	9672	6653	3352	8835	6585	3557
(1.2+1.8)+ (1.2+1.8+5)	12.0	18	10355	7104	2407	7463	6027	1819	6907	5564	2144	7626	6178	2774	7347	5906	2894	6882	5567	3105	6603	5295	3226
	14.0	20	10355	7104	2407	8018	6027	1819	7463	5622	2169	8184	6178	2804	7905	5974	2925	7347	5567	3136	7068	5363	3286
	16.0	22	10355	7559	2445	8574	6027	1843	7939	5622	2194	8742	6178	2834	8463	5974	2985	7905	5567	3196	7626	5363	3317
	18.0	25	11103	8105	2483	9130	6549	1867	8415	6085	2220	9300	6721	2864	8928	6450	2985	8370	6042	3226	7998	5771	3347
	19.0	27	11478	8379	2520	9447	6897	1891	8733	6375	2245	9672	7061	2894	9300	6789	3015	8742	6382	3226	8370	6110	3347
	22.0	30	12725	8288	2520	10480	6839	1891	9686	6317	2245	10695	6993	2925	10323	6721	3045	9300	6517	3347	8649	6382	3528
	24.0	32	13598	8288	2558	11194	6839	1915	10321	6317	2270	11439	6993	2925	10974	6721	3075	9672	6653	3437	8835	6585	3648
(1.2+1.8)+ (1.2+2.5+2.5)	12.0	18	10243	7027	2347	7382	5962	1774	6833	5504	2091	7544	6112	2705	7268	5843	2822	6808	5507	3028	6532	5238	3146
	14.0	20	10243	7027	2347	7932	5962	1774	7382	5561	2115	8096	6112	2734	7820	5910	2852	7268	5507	3058	6992	5306	3205
	16.0	22	10243	7478	2384	8482	5962	1797	7854	5561	2140	8648	6112	2764	8372	5910	2911	7820	5507	3116	7544	5306	3234
	18.0	25	10984	8018	2421	9032	6478	1821	8325	6020	2164	9200	6649	2793	8832	6380	2911	8280	5977	3146	7912	5709	3263
	19.0	27	11354	8289	2457	9346	6822	1844	8639	6306	2189	9568	6985	2822	9200	6716	2940	8648	6313	3146	8280	6044	3263
	22.0	30	12588	8198	2457	10367	6765	1844	9581	6249	2189	10580	6917	2852	10212	6649	2969	9200	6447	3263	8556	6313	3440
	24.0	32	13452	8198	2494	11074	6765	1867	10210	6249	2214	11316	6917	2852	10856	6649	2999	9568	6582	3352	8740	6515	3557

	INDOOR		OUTDOOR TEMPERATURE (°CDB)																				
	EWB	EDB	-10			21			27			32			35			40			43		
	°C	°C	TC	SHC	PI	TC	SHC	PI	TC	SHC	PI	TC	SHC	PI	TC	SHC	PI	TC	SHC	PI	TC	SHC	PI
(1.2+1.8)+ (1.2+2.5+3.5)	12.0	18	10355	7104	2407	7463	6027	1819	6907	5564	2144	7626	6178	2774	7347	5906	2894	6882	5567	3105	6603	5295	3226
	14.0	20	10355	7104	2407	8018	6027	1819	7463	5622	2169	8184	6178	2804	7905	5974	2925	7347	5567	3136	7068	5363	3286
	16.0	22	10355	7559	2445	8574	6027	1843	7939	5622	2194	8742	6178	2834	8463	5974	2985	7905	5567	3196	7626	5363	3317
	18.0	25	11103	8105	2483	9130	6549	1867	8415	6085	2220	9300	6721	2864	8928	6450	2985	8370	6042	3226	7998	5771	3347
	19.0	27	11478	8379	2520	9447	6897	1891	8733	6375	2245	9672	7061	2894	9300	6789	3015	8742	6382	3226	8370	6110	3347
	22.0	30	12725	8288	2520	10480	6839	1891	9686	6317	2245	10695	6993	2925	10323	6721	3045	9300	6517	3347	8649	6382	3528
	24.0	32	13598	8288	2558	11194	6839	1915	10321	6317	2270	11439	6993	2925	10974	6721	3075	9672	6653	3437	8835	6585	3648
(1.2+1.8)+ (1.2+3.5+3.5)	12.0	18	10355	7104	2407	7463	6027	1819	6907	5564	2144	7626	6178	2774	7347	5906	2894	6882	5567	3105	6603	5295	3226
	14.0	20	10355	7104	2407	8018	6027	1819	7463	5622	2169	8184	6178	2804	7905	5974	2925	7347	5567	3136	7068	5363	3286
	16.0	22	10355	7559	2445	8574	6027	1843	7939	5622	2194	8742	6178	2834	8463	5974	2985	7905	5567	3196	7626	5363	3317
	18.0	25	11103	8105	2483	9130	6549	1867	8415	6085	2220	9300	6721	2864	8928	6450	2985	8370	6042	3226	7998	5771	3347
	19.0	27	11478	8379	2520	9447	6897	1891	8733	6375	2245	9672	7061	2894	9300	6789	3015	8742	6382	3226	8370	6110	3347
	22.0	30	12725	8288	2520	10480	6839	1891	9686	6317	2245	10695	6993	2925	10323	6721	3045	9300	6517	3347	8649	6382	3528
	24.0	32	13598	8288	2558	11194	6839	1915	10321	6317	2270	11439	6993	2925	10974	6721	3075	9672	6653	3437	8835	6585	3648
(1.2+1.8)+ (1.8+1.8+1.8)	12.0	18	9353	6416	2156	6740	5444	1629	6239	5025	1920	6888	5580	2484	6636	5335	2592	6216	5028	2781	5964	4783	2889
	14.0	20	9353	6416	2156	7242	5444	1629	6740	5078	1943	7392	5580	2511	7140	5396	2619	6636	5028	2808	6384	4844	2943
	16.0	22	9353	6827	2189	7744	5444	1651	7171	5078	1965	7896	5580	2538	7644	5396	2673	7140	5028	2862	6888	4844	2970
	18.0	25	10029	7321	2223	8246	5915	1672	7601	5496	1988	8400	6071	2565	8064	5825	2673	7560	5457	2889	7224	5212	2997
	19.0	27	10367	7568	2257	8533	6229	1693	7888	5758	2010	8736	6377	2592	8400	6132	2700	7896	5764	2889	7560	5519	2997
	22.0	30	11494	7486	2257	9465	6177	1693	8748	5706	2010	9660	6316	2619	9324	6071	2727	8400	5887	2997	7812	5764	3159
	24.0	32	12282	7486	2291	10111	6177	1715	9322	5706	2033	10332	6316	2619	9912	6071	2754	8736	6009	3078	7980	5948	3267
(1.2+1.8)+ (1.8+1.8+2.5)	12.0	18	10132	6951	2347	7302	5898	1774	6758	5444	2091	7462	6045	2705	7189	5779	2822	6734	5447	3028	6461	5182	3146
	14.0	20	10132	6951	2347	7846	5898	1774	7302	5501	2115	8008	6045	2734	7735	5846	2852	7189	5447	3058	6916	5248	3205
	16.0	22	10132	7396	2384	8390	5898	1797	7768	5501	2140	8554	6045	2764	8281	5846	2911	7735	5447	3116	7462	5248	3234
	18.0	25	10865	7931	2421	8934	6408	1821	8234	5954	2164	9100	6577	2793	8736	6311	2911	8190	5912	3146	7826	5647	3263
	19.0	27	11231	8198	2457	9244	6748	1844	8545	6238	2189	9464	6909	2822	9100	6643	2940	8554	6244	3146	8190	5979	3263
	22.0	30	12451	8109	2457	10254	6692	1844	9477	6181	2189	10465	6842	2852	10101	6577	2969	9100	6377	3263	8463	6244	3440
	24.0	32	13306	8109	2494	10953	6692	1867	10099	6181	2214	11193	6842	2852	10738	6577	2999	9464	6510	3352	8645	6444	3557
(1.2+1.8)+ (1.8+1.8+3.5)	12.0	18	10355	7104	2407	7463	6027	1819	6907	5564	2144	7626	6178	2774	7347	5906	2894	6882	5567	3105	6603	5295	3226
	14.0	20	10355	7104	2407	8018	6027	1819	7463	5622	2169	8184	6178	2804	7905	5974	2925	7347	5567	3136	7068	5363	3286
	16.0	22	10355	7559	2445	8574	6027	1843	7939	5622	2194	8742	6178	2834	8463	5974	2985	7905	5567	3196	7626	5363	3317
	18.0	25	11103	8105	2483	9130	6549	1867	8415	6085	2220	9300	6721	2864	8928	6450	2985	8370	6042	3226	7998	5771	3347
	19.0	27	11478	8379	2520	9447	6897	1891	8733	6375	2245	9672	7061	2894	9300	6789	3015	8742	6382	3226	8370	6110	3347
	22.0	30	12725	8288	2520	10480	6839	1891	9686	6317	2245	10695	6993	2925	10323	6721	3045	9300	6517	3347	8649	6382	3528
	24.0	32	13598	8288	2558	11194	6839	1915	10321	6317	2270	11439	6993	2925	10974	6721	3075	9672	6653	3437	8835	6585	3648
(1.2+1.8)+ (1.8+1.8+5)	12.0	18	10355	7104	2407	7463	6027	1819	6907	5564	2144	7626	6178	2774	7347	5906	2894	6882	5567	3105	6603	5295	3226
	14.0	20	10355	7104	2407	8018	6027	1819	7463	5622	2169	8184	6178	2804	7905	5974	2925	7347	5567	3136	7068	5363	3286
	16.0	22	10355	7559	2445	8574	6027	1843	7939	5622	2194	8742	6178	2834	8463	5974	2985	7905	5567	3196	7626	5363	3317
	18.0	25	11103	8105	2483	9130	6549	1867	8415	6085	2220	9300	6721	2864	8928	6450	2985	8370	6042	3226	7998	5771	3347
	19.0	27	11478	8379	2520	9447	6897	1891	8733	6375	2245	9672	7061	2894	9300	6789	3015	8742	6382	3226	8370	6110	3347
	22.0	30	12725	8288	2520	10480	6839	1891	9686	6317	2245	10695	6993	2925	10323	6721	3045	9300	6517	3347	8649	6382	3528
	24.0	32	13598	8288	2558	11194	6839	1915	10321	6317	2270	11439	6993	2925	10974	6721	3075	9672	6653	3437	8835	6585	3648
(1.2+1.8)+ (1.8+2.5+2.5)	12.0	18	10355	7104	2407	7463	6027	1819	6907	5564	2144	7626	6178	2774	7347	5906	2894	6882	5567	3105	6603	5295	3226
	14.0	20	10355	7104	2407	8018	6027	1819	7463	5622	2169	8184	6178	2804	7905	5974	2925	7347	5567	3136	7068	5363	3286
	16.0	22	10355	7559	2445	8574	6027	1843	7939	5622	2194	8742	6178	2834	8463	5974	2985	7905	5567	3196	7626	5363	3317
	18.0	25	11103	8105	2483	9130	6549	1867	8415	6085	2220	9300	6721	2864	8928	6450	2985	8370	6042	3226	7998	5771	3347
	19.0	27	11478	8379	2520	9447	6897	1891	8733	6375	2245	9672	7061	2894	9300	6789	3015	8742	6382	3226	8370	6110	3347
	22.0	30	12725	8288	2520	10480	6839	1891	9686	6317	2245	10695	6993	2925	10323	6721	3045	9300	6517	3347	8649	6382	3528
	24.0	32	13598	8288	2558	11194	6839	1915	10321	6317	2270	11439	6993	2925	10974	6721	3075	9672	6653	3437	8835	6585	3648

	INDOOR		OUTDOOR TEMPERATURE (°CDB)																			
	EWB	EDB	-10			21			27			32			35			40			43		
	°C	°C	TC	SHC	PI	TC	SHC	PI	TC	SHC	PI	TC	SHC	PI	TC	SHC	PI	TC	SHC	PI	TC	SHC	PI
(1.2+1.8)+ (1.8+2.5+3.5)	12.0	18	10355	7104	2407	7463	6027	1819	6907	5564	2144	7626	6178	2774	7347	5906	2894	6882	5567	3105	6603	5295	3226
	14.0	20	10355	7104	2407	8018	6027	1819	7463	5622	2169	8184	6178	2804	7905	5974	2925	7347	5567	3136	7068	5363	3286
	16.0	22	10355	7559	2445	8574	6027	1843	7939	5622	2194	8742	6178	2834	8463	5974	2985	7905	5567	3196	7626	5363	3317
	18.0	25	11103	8105	2483	9130	6549	1867	8415	6085	2220	9300	6721	2864	8928	6450	2985	8370	6042	3226	7998	5771	3347
	19.0	27	11478	8379	2520	9447	6897	1891	8733	6375	2245	9672	7061	2894	9300	6789	3015	8742	6382	3226	8370	6110	3347
	22.0	30	12725	8288	2520	10480	6839	1891	9686	6317	2245	10695	6993	2925	10323	6721	3045	9300	6517	3347	8649	6382	3528
	24.0	32	13598	8288	2558	11194	6839	1915	10321	6317	2270	11439	6993	2925	10974	6721	3075	9672	6653	3437	8835	6585	3648
(1.2+1.8)+ (1.8+3.5+3.5)	12.0	18	10355	7104	2407	7463	6027	1819	6907	5564	2144	7626	6178	2774	7347	5906	2894	6882	5567	3105	6603	5295	3226
	14.0	20	10355	7104	2407	8018	6027	1819	7463	5622	2169	8184	6178	2804	7905	5974	2925	7347	5567	3136	7068	5363	3286
	16.0	22	10355	7559	2445	8574	6027	1843	7939	5622	2194	8742	6178	2834	8463	5974	2985	7905	5567	3196	7626	5363	3317
	18.0	25	11103	8105	2483	9130	6549	1867	8415	6085	2220	9300	6721	2864	8928	6450	2985	8370	6042	3226	7998	5771	3347
	19.0	27	11478	8379	2520	9447	6897	1891	8733	6375	2245	9672	7061	2894	9300	6789	3015	8742	6382	3226	8370	6110	3347
	22.0	30	12725	8288	2520	10480	6839	1891	9686	6317	2245	10695	6993	2925	10323	6721	3045	9300	6517	3347	8649	6382	3528
	24.0	32	13598	8288	2558	11194	6839	1915	10321	6317	2270	11439	6993	2925	10974	6721	3075	9672	6653	3437	8835	6585	3648
(1.2+1.8)+ (2.5+2.5+2.5)	12.0	18	10355	7104	2407	7463	6027	1819	6907	5564	2144	7626	6178	2774	7347	5906	2894	6882	5567	3105	6603	5295	3226
	14.0	20	10355	7104	2407	8018	6027	1819	7463	5622	2169	8184	6178	2804	7905	5974	2925	7347	5567	3136	7068	5363	3286
	16.0	22	10355	7559	2445	8574	6027	1843	7939	5622	2194	8742	6178	2834	8463	5974	2985	7905	5567	3196	7626	5363	3317
	18.0	25	11103	8105	2483	9130	6549	1867	8415	6085	2220	9300	6721	2864	8928	6450	2985	8370	6042	3226	7998	5771	3347
	19.0	27	11478	8379	2520	9447	6897	1891	8733	6375	2245	9672	7061	2894	9300	6789	3015	8742	6382	3226	8370	6110	3347
	22.0	30	12725	8288	2520	10480	6839	1891	9686	6317	2245	10695	6993	2925	10323	6721	3045	9300	6517	3347	8649	6382	3528
	24.0	32	13598	8288	2558	11194	6839	1915	10321	6317	2270	11439	6993	2925	10974	6721	3075	9672	6653	3437	8835	6585	3648
(1.2+1.8)+ (2.5+2.5+3.5)	12.0	18	10355	7104	2407	7463	6027	1819	6907	5564	2144	7626	6178	2774	7347	5906	2894	6882	5567	3105	6603	5295	3226
	14.0	20	10355	7104	2407	8018	6027	1819	7463	5622	2169	8184	6178	2804	7905	5974	2925	7347	5567	3136	7068	5363	3286
	16.0	22	10355	7559	2445	8574	6027	1843	7939	5622	2194	8742	6178	2834	8463	5974	2985	7905	5567	3196	7626	5363	3317
	18.0	25	11103	8105	2483	9130	6549	1867	8415	6085	2220	9300	6721	2864	8928	6450	2985	8370	6042	3226	7998	5771	3347
	19.0	27	11478	8379	2520	9447	6897	1891	8733	6375	2245	9672	7061	2894	9300	6789	3015	8742	6382	3226	8370	6110	3347
	22.0	30	12725	8288	2520	10480	6839	1891	9686	6317	2245	10695	6993	2925	10323	6721	3045	9300	6517	3347	8649	6382	3528
	24.0	32	13598	8288	2558	11194	6839	1915	10321	6317	2270	11439	6993	2925	10974	6721	3075	9672	6653	3437	8835	6585	3648
(1.2+2.5)+ (1.2+1.2+1.2)	12.0	18	8128	5576	1828	5858	4731	1382	5422	4367	1628	5986	4849	2107	5767	4636	2198	5402	4370	2359	5183	4157	2450
	14.0	20	8128	5576	1828	6294	4731	1382	5858	4413	1648	6424	4849	2130	6205	4690	2221	5767	4370	2382	5548	4210	2496
	16.0	22	8128	5933	1857	6730	4731	1400	6232	4413	1667	6862	4849	2153	6643	4690	2267	6205	4370	2427	5986	4210	2519
	18.0	25	8715	6362	1886	7166	5141	1418	6606	4777	1686	7300	5276	2176	7008	5063	2267	6570	4743	2450	6278	4530	2542
	19.0	27	9009	6577	1914	7416	5413	1436	6855	5004	1705	7592	5542	2198	7300	5329	2290	6862	5009	2450	6570	4796	2542
	22.0	30	9989	6505	1914	8226	5368	1436	7603	4959	1705	8395	5489	2221	8103	5276	2313	7300	5116	2542	6789	5009	2679
	24.0	32	10674	6505	1943	8787	5368	1454	8101	4959	1724	8979	5489	2221	8614	5276	2336	7592	5222	2611	6935	5169	2771
(1.2+2.5)+ (1.2+1.2+1.8)	12.0	18	8796	6034	1964	6339	5120	1484	5867	4726	1749	6478	5248	2263	6241	5017	2362	5846	4729	2534	5609	4498	2632
	14.0	20	8796	6034	1964	6811	5120	1484	6339	4775	1770	6952	5248	2288	6715	5075	2386	6241	4729	2558	6004	4556	2681
	16.0	22	8796	6421	1995	7283	5120	1504	6744	4775	1790	7426	5248	2312	7189	5075	2435	6715	4729	2608	6478	4556	2706
	18.0	25	9432	6885	2026	7755	5563	1523	7149	5169	1811	7900	5709	2337	7584	5479	2435	7110	5133	2632	6794	4902	2731
	19.0	27	9750	7117	2056	8025	5858	1543	7418	5415	1832	8216	5998	2362	7900	5767	2460	7426	5421	2632	7110	5190	2731
	22.0	30	10810	7040	2056	8902	5809	1543	8228	5366	1832	9085	5940	2386	8769	5709	2485	7900	5536	2731	7347	5421	2878
	24.0	32	11551	7040	2087	9509	5809	1562	8767	5366	1852	9717	5940	2386	9322	5709	2509	8216	5652	2804	7505	5594	2977
(1.2+2.5)+(1.2 +1.2+2.5)	12.0	18	9575	6569	2124	6901	5574	1605	6387	5145	1892	7052	5713	2447	6794	5462	2554	6364	5148	2740	6106	4897	2846
	14.0	20	9575	6569	2124	7415	5574	1605	6901	5198	1914	7568	5713	2474	7310	5525	2580	6794	5148	2766	6536	4960	2899
	16.0	22	9575	6990	2157	7929	5574	1626	7341	5198	1936	8084	5713	2500	7826	5525	2633	7310	5148	2820	7052	4960	2926
	18.0	25	10268	7495	2190	8443	6056	1647	7782	5627	1958	8600	6215	2527	8256	5964	2633	7740	5587	2846	7396	5336	2953
	19.0	27	10614	7748	2223	8736	6378	1668	8076	5895	1981	8944	6529	2554	8600	6278	2660	8084	5901	2846	7740	5650	2953
	22.0	30	11767	7664	2223	9691	6324	1668	8957	5842	1981	9890	6466	2580	9546	6215	2687	8600	6027	2953	7998	5901	3112
	24.0	32	12575	7664	2257	10351	6324	1689	9544	5842	2003	10578	6466	2580	10148	6215	2713	8944	6152	3032	8170	6090	3219

	INDOOR		OUTDOOR TEMPERATURE (°CDB)																				
	EWB	EDB	-10			21			27			32			35			40			43		
	°C	°C	TC	SHC	PI	TC	SHC	PI	TC	SHC	PI	TC	SHC	PI	TC	SHC	PI	TC	SHC	PI	TC	SHC	PI
(1.2+2.5)+(1.2+1.2+3.5)	12.0	18	10689	7333	2184	7703	6222	1650	7130	5743	1945	7872	6377	2516	7584	6097	2626	7104	5747	2817	6816	5466	2926
	14.0	20	10689	7333	2184	8277	6222	1650	7703	5803	1968	8448	6377	2544	8160	6167	2653	7584	5747	2844	7296	5536	2981
	16.0	22	10689	7803	2218	8851	6222	1672	8195	5803	1991	9024	6377	2571	8736	6167	2708	8160	5747	2899	7872	5536	3009
	18.0	25	11461	8367	2252	9424	6760	1694	8687	6282	2013	9600	6938	2598	9216	6658	2708	8640	6237	2926	8256	5957	3036
	19.0	27	11848	8649	2286	9752	7119	1715	9015	6581	2036	9984	7288	2626	9600	7008	2735	9024	6588	2926	8640	6307	3036
	22.0	30	13136	8555	2286	10818	7059	1715	9998	6521	2036	11040	7218	2653	10656	6938	2762	9600	6728	3036	8928	6588	3200
	24.0	32	14037	8555	2320	11555	7059	1737	10654	6521	2059	11808	7218	2653	11328	6938	2790	9984	6868	3118	9120	6798	3309
(1.2+2.5)+(1.2+1.2+5)	12.0	18	11134	7638	2639	8024	6481	1994	7427	5982	2350	8200	6643	3041	7900	6351	3173	7400	5986	3404	7100	5694	3536
	14.0	20	11134	7638	2639	8622	6481	1994	8024	6045	2378	8800	6643	3074	8500	6424	3206	7900	5986	3437	7600	5767	3602
	16.0	22	11134	8128	2680	9220	6481	2020	8537	6045	2405	9400	6643	3107	9100	6424	3272	8500	5986	3503	8200	5767	3636
	18.0	25	11939	8715	2721	9817	7042	2047	9049	6543	2433	10000	7227	3140	9600	6935	3272	9000	6497	3536	8600	6205	3669
	19.0	27	12341	9009	2763	10159	7416	2073	9390	6855	2461	10400	7592	3173	10000	7300	3305	9400	6862	3536	9000	6570	3669
	22.0	30	13683	8911	2763	11268	7353	2073	10415	6793	2461	11500	7519	3206	11100	7227	3338	10000	7008	3669	9300	6862	3867
	24.0	32	14622	8911	2804	12037	7353	2099	11098	6793	2488	12300	7519	3206	11800	7227	3371	10400	7154	3768	9500	7081	3999
(1.2+2.5)+(1.2+1.8+1.8)	12.0	18	9464	6493	2100	6821	5509	1587	6313	5085	1870	6970	5647	2420	6715	5398	2525	6290	5088	2709	6035	4840	2814
	14.0	20	9464	6493	2100	7329	5509	1587	6821	5138	1892	7480	5647	2446	7225	5460	2551	6715	5088	2735	6460	4902	2867
	16.0	22	9464	6909	2133	7837	5509	1608	7256	5138	1914	7990	5647	2472	7735	5460	2604	7225	5088	2788	6970	4902	2893
	18.0	25	10148	7408	2166	8345	5986	1629	7691	5562	1936	8500	6143	2499	8160	5895	2604	7650	5522	2814	7310	5274	2919
	19.0	27	10490	7658	2198	8635	6303	1649	7982	5827	1958	8840	6453	2525	8500	6205	2630	7990	5833	2814	7650	5585	2919
	22.0	30	11630	7575	2198	9578	6250	1649	8852	5774	1958	9775	6391	2551	9435	6143	2656	8500	5957	2919	7905	5833	3077
	24.0	32	12429	7575	2231	10231	6250	1670	9433	5774	1980	10455	6391	2551	10030	6143	2683	8840	6081	2998	8075	6019	3182
(1.2+2.5)+(1.2+1.8+2.5)	12.0	18	10243	7027	2387	7382	5962	1804	6833	5504	2126	7544	6112	2751	7268	5843	2870	6808	5507	3080	6532	5238	3199
	14.0	20	10243	7027	2387	7932	5962	1804	7382	5561	2151	8096	6112	2781	7820	5910	2900	7268	5507	3110	6992	5306	3259
	16.0	22	10243	7478	2425	8482	5962	1828	7854	5561	2176	8648	6112	2811	8372	5910	2960	7820	5507	3169	7544	5306	3289
	18.0	25	10984	8018	2462	9032	6478	1852	8325	6020	2201	9200	6649	2841	8832	6380	2960	8280	5977	3199	7912	5709	3319
	19.0	27	11354	8289	2499	9346	6822	1875	8639	6306	2226	9568	6985	2870	9200	6716	2990	8648	6313	3199	8280	6044	3319
	22.0	30	12588	8198	2499	10367	6765	1875	9581	6249	2226	10580	6917	2900	10212	6649	3020	9200	6447	3319	8556	6313	3498
	24.0	32	13452	8198	2537	11074	6765	1899	10210	6249	2251	11316	6917	2900	10856	6649	3050	9568	6582	3409	8740	6515	3618
(1.2+2.5)+(1.2+1.8+3.5)	12.0	18	11134	7638	2579	8024	6481	1949	7427	5982	2297	8200	6643	2972	7900	6351	3101	7400	5986	3327	7100	5694	3456
	14.0	20	11134	7638	2579	8622	6481	1949	8024	6045	2324	8800	6643	3004	8500	6424	3133	7900	5986	3359	7600	5767	3521
	16.0	22	11134	8128	2619	9220	6481	1975	8537	6045	2351	9400	6643	3036	9100	6424	3198	8500	5986	3424	8200	5767	3553
	18.0	25	11939	8715	2660	9817	7042	2000	9049	6543	2378	10000	7227	3069	9600	6935	3198	9000	6497	3456	8600	6205	3585
	19.0	27	12341	9009	2700	10159	7416	2026	9390	6855	2405	10400	7592	3101	10000	7300	3230	9400	6862	3456	9000	6570	3585
	22.0	30	13683	8911	2700	11268	7353	2026	10415	6793	2405	11500	7519	3133	11100	7227	3262	10000	7008	3585	9300	6862	3779
	24.0	32	14622	8911	2740	12037	7353	2051	11098	6793	2432	12300	7519	3133	11800	7227	3295	10400	7154	3682	9500	7081	3908
(1.2+2.5)+(1.2+1.8+5)	12.0	18	11134	7638	2639	8024	6481	1994	7427	5982	2350	8200	6643	3041	7900	6351	3173	7400	5986	3404	7100	5694	3536
	14.0	20	11134	7638	2639	8622	6481	1994	8024	6045	2378	8800	6643	3074	8500	6424	3206	7900	5986	3437	7600	5767	3602
	16.0	22	11134	8128	2680	9220	6481	2020	8537	6045	2405	9400	6643	3107	9100	6424	3272	8500	5986	3503	8200	5767	3636
	18.0	25	11939	8715	2721	9817	7042	2047	9049	6543	2433	10000	7227	3140	9600	6935	3272	9000	6497	3536	8600	6205	3669
	19.0	27	12341	9009	2763	10159	7416	2073	9390	6855	2461	10400	7592	3173	10000	7300	3305	9400	6862	3536	9000	6570	3669
	22.0	30	13683	8911	2763	11268	7353	2073	10415	6793	2461	11500	7519	3206	11100	7227	3338	10000	7008	3669	9300	6862	3867
	24.0	32	14622	8911	2804	12037	7353	2099	11098	6793	2488	12300	7519	3206	11800	7227	3371	10400	7154	3768	9500	7081	3999
(1.2+2.5)+(1.2+2.5+2.5)	12.0	18	11023	7562	2579	7944	6416	1949	7353	5923	2297	8118	6577	2972	7821	6287	3101	7326	5926	3327	7029	5637	3456
	14.0	20	11023	7562	2579	8536	6416	1949	7944	5984	2324	8712	6577	3004	8415	6360	3133	7821	5926	3359	7524	5709	3521
	16.0	22	11023	8047	2619	9127	6416	1975	8451	5984	2351	9306	6577	3036	9009	6360	3198	8415	5926	3424	8118	5709	3553
	18.0	25	11820	8628	2660	9719	6971	2000	8958	6478	2378	9900	7155	3069	9504	6866	3198	8910	6432	3456	8514	6143	3585
	19.0	27	12218	8919	2700	10057	7342	2026	9296	6786	2405	10296	7516	3101	9900	7227	3230	9306	6793	3456	8910	6504	3585
	22.0	30	13546	8822	2700	11156	7280	2026	10310	6725	2405	11385	7444	3133	10989	7155	3262	9900	6938	3585	9207	6793	3779
	24.0	32	14476	8822	2740	11916	7280	2051	10987	6725	2432	12177	7444	3133	11682	7155	3295	10296	7082	3682	9405	7010	3908

	INDOOR		OUTDOOR TEMPERATURE (°CDB)																				
	EWB	EDB	-10			21			27			32			35			40			43		
	°C	°C	TC	SHC	PI	TC	SHC	PI	TC	SHC	PI	TC	SHC	PI	TC	SHC	PI	TC	SHC	PI	TC	SHC	PI
(1.2+2.5)+ (1.2+2.5+3.5)	12.0	18	11134	7638	2639	8024	6481	1994	7427	5982	2350	8200	6643	3041	7900	6351	3173	7400	5986	3404	7100	5694	3536
	14.0	20	11134	7638	2639	8622	6481	1994	8024	6045	2378	8800	6643	3074	8500	6424	3206	7900	5986	3437	7600	5767	3602
	16.0	22	11134	8128	2680	9220	6481	2020	8537	6045	2405	9400	6643	3107	9100	6424	3272	8500	5986	3503	8200	5767	3636
	18.0	25	11939	8715	2721	9817	7042	2047	9049	6543	2433	10000	7227	3140	9600	6935	3272	9000	6497	3536	8600	6205	3669
	19.0	27	12341	9009	2763	10159	7416	2073	9390	6855	2461	10400	7592	3173	10000	7300	3305	9400	6862	3536	9000	6570	3669
	22.0	30	13683	8911	2763	11268	7353	2073	10415	6793	2461	11500	7519	3206	11100	7227	3338	10000	7008	3669	9300	6862	3867
	24.0	32	14622	8911	2804	12037	7353	2099	11098	6793	2488	12300	7519	3206	11800	7227	3371	10400	7154	3768	9500	7081	3999
(1.2+2.5)+ (1.2+3.5+3.5)	12.0	18	11134	7638	2639	8024	6481	1994	7427	5982	2350	8200	6643	3041	7900	6351	3173	7400	5986	3404	7100	5694	3536
	14.0	20	11134	7638	2639	8622	6481	1994	8024	6045	2378	8800	6643	3074	8500	6424	3206	7900	5986	3437	7600	5767	3602
	16.0	22	11134	8128	2680	9220	6481	2020	8537	6045	2405	9400	6643	3107	9100	6424	3272	8500	5986	3503	8200	5767	3636
	18.0	25	11939	8715	2721	9817	7042	2047	9049	6543	2433	10000	7227	3140	9600	6935	3272	9000	6497	3536	8600	6205	3669
	19.0	27	12341	9009	2763	10159	7416	2073	9390	6855	2461	10400	7592	3173	10000	7300	3305	9400	6862	3536	9000	6570	3669
	22.0	30	13683	8911	2763	11268	7353	2073	10415	6793	2461	11500	7519	3206	11100	7227	3338	10000	7008	3669	9300	6862	3867
	24.0	32	14622	8911	2804	12037	7353	2099	11098	6793	2488	12300	7519	3206	11800	7227	3371	10400	7154	3768	9500	7081	3999
(1.2+2.5)+ (1.8+1.8+1.8)	12.0	18	10132	6951	2387	7302	5898	1804	6758	5444	2126	7462	6045	2751	7189	5779	2870	6734	5447	3080	6461	5182	3199
	14.0	20	10132	6951	2387	7846	5898	1804	7302	5501	2151	8008	6045	2781	7735	5846	2900	7189	5447	3110	6916	5248	3259
	16.0	22	10132	7396	2425	8390	5898	1828	7768	5501	2176	8554	6045	2811	8281	5846	2960	7735	5447	3169	7462	5248	3289
	18.0	25	10865	7931	2462	8934	6408	1852	8234	5954	2201	9100	6577	2841	8736	6311	2960	8190	5912	3199	7826	5647	3319
	19.0	27	11231	8198	2499	9244	6748	1875	8545	6238	2226	9464	6909	2870	9100	6643	2990	8554	6244	3199	8190	5979	3319
	22.0	30	12451	8109	2499	10254	6692	1875	9477	6181	2226	10465	6842	2900	10101	6577	3020	9100	6377	3319	8463	6244	3498
	24.0	32	13306	8109	2537	10953	6692	1899	10099	6181	2251	11193	6842	2900	10738	6577	3050	9464	6510	3409	8645	6444	3618
(1.2+2.5)+ (1.8+1.8+2.5)	12.0	18	10911	7486	2579	7864	6351	1949	7278	5863	2297	8036	6510	2972	7742	6224	3101	7252	5866	3327	6958	5580	3456
	14.0	20	10911	7486	2579	8450	6351	1949	7864	5924	2324	8624	6510	3004	8330	6296	3133	7742	5866	3359	7448	5652	3521
	16.0	22	10911	7965	2619	9035	6351	1975	8366	5924	2351	9212	6510	3036	8918	6296	3198	8330	5866	3424	8036	5652	3553
	18.0	25	11700	8541	2660	9621	6901	2000	8868	6412	2378	9800	7082	3069	9408	6796	3198	8820	6367	3456	8428	6081	3585
	19.0	27	12095	8829	2700	9955	7267	2026	9202	6718	2405	10192	7440	3101	9800	7154	3230	9212	6725	3456	8820	6439	3585
	22.0	30	13409	8733	2700	11043	7206	2026	10206	6657	2405	11270	7369	3133	10878	7082	3262	9800	6868	3585	9114	6725	3779
	24.0	32	14330	8733	2740	11796	7206	2051	10876	6657	2432	12054	7369	3133	11564	7082	3295	10192	7011	3682	9310	6939	3908
(1.2+2.5)+ (1.8+1.8+3.5)	12.0	18	11134	7638	2639	8024	6481	1994	7427	5982	2350	8200	6643	3041	7900	6351	3173	7400	5986	3404	7100	5694	3536
	14.0	20	11134	7638	2639	8622	6481	1994	8024	6045	2378	8800	6643	3074	8500	6424	3206	7900	5986	3437	7600	5767	3602
	16.0	22	11134	8128	2680	9220	6481	2020	8537	6045	2405	9400	6643	3107	9100	6424	3272	8500	5986	3503	8200	5767	3636
	18.0	25	11939	8715	2721	9817	7042	2047	9049	6543	2433	10000	7227	3140	9600	6935	3272	9000	6497	3536	8600	6205	3669
	19.0	27	12341	9009	2763	10159	7416	2073	9390	6855	2461	10400	7592	3173	10000	7300	3305	9400	6862	3536	9000	6570	3669
	22.0	30	13683	8911	2763	11268	7353	2073	10415	6793	2461	11500	7519	3206	11100	7227	3338	10000	7008	3669	9300	6862	3867
	24.0	32	14622	8911	2804	12037	7353	2099	11098	6793	2488	12300	7519	3206	11800	7227	3371	10400	7154	3768	9500	7081	3999
(1.2+2.5)+ (1.8+1.8+5)	12.0	18	11134	7638	2639	8024	6481	1994	7427	5982	2350	8200	6643	3041	7900	6351	3173	7400	5986	3404	7100	5694	3536
	14.0	20	11134	7638	2639	8622	6481	1994	8024	6045	2378	8800	6643	3074	8500	6424	3206	7900	5986	3437	7600	5767	3602
	16.0	22	11134	8128	2680	9220	6481	2020	8537	6045	2405	9400	6643	3107	9100	6424	3272	8500	5986	3503	8200	5767	3636
	18.0	25	11939	8715	2721	9817	7042	2047	9049	6543	2433	10000	7227	3140	9600	6935	3272	9000	6497	3536	8600	6205	3669
	19.0	27	12341	9009	2763	10159	7416	2073	9390	6855	2461	10400	7592	3173	10000	7300	3305	9400	6862	3536	9000	6570	3669
	22.0	30	13683	8911	2763	11268	7353	2073	10415	6793	2461	11500	7519	3206	11100	7227	3338	10000	7008	3669	9300	6862	3867
	24.0	32	14622	8911	2804	12037	7353	2099	11098	6793	2488	12300	7519	3206	11800	7227	3371	10400	7154	3768	9500	7081	3999
(1.2+2.5)+ (1.8+2.5+2.5)	12.0	18	11134	7638	2639	8024	6481	1994	7427	5982	2350	8200	6643	3041	7900	6351	3173	7400	5986	3404	7100	5694	3536
	14.0	20	11134	7638	2639	8622	6481	1994	8024	6045	2378	8800	6643	3074	8500	6424	3206	7900	5986	3437	7600	5767	3602
	16.0	22	11134	8128	2680	9220	6481	2020	8537	6045	2405	9400	6643	3107	9100	6424	3272	8500	5986	3503	8200	5767	3636
	18.0	25	11939	8715	2721	9817	7042	2047	9049	6543	2433	10000	7227	3140	9600	6935	3272	9000	6497	3536	8600	6205	3669
	19.0	27	12341	9009	2763	10159	7416	2073	9390	6855	2461	10400	7592	3173	10000	7300	3305	9400	6862	3536	9000	6570	3669
	22.0	30	13683	8911	2763	11268	7353	2073	10415	6793	2461	11500	7519	3206	11100	7227	3338	10000	7008	3669	9300	6862	3867
	24.0	32	14622	8911	2804	12037	7353	2099	11098	6793	2488	12300	7519	3206	11800	7227	3371	10400	7154	3768	9500	7081	3999

	INDOOR		OUTDOOR TEMPERATURE (°CDB)																				
	EWB	EDB	-10			21			27			32			35			40			43		
	°C	°C	TC	SHC	PI	TC	SHC	PI	TC	SHC	PI	TC	SHC	PI	TC	SHC	PI	TC	SHC	PI	TC	SHC	PI
(1.2+2.5)+ (1.8+2.5+3.5)	12.0	18	11134	7638	2639	8024	6481	1994	7427	5982	2350	8200	6643	3041	7900	6351	3173	7400	5986	3404	7100	5694	3536
	14.0	20	11134	7638	2639	8622	6481	1994	8024	6045	2378	8800	6643	3074	8500	6424	3206	7900	5986	3437	7600	5767	3602
	16.0	22	11134	8128	2680	9220	6481	2020	8537	6045	2405	9400	6643	3107	9100	6424	3272	8500	5986	3503	8200	5767	3636
	18.0	25	11939	8715	2721	9817	7042	2047	9049	6543	2433	10000	7227	3140	9600	6935	3272	9000	6497	3536	8600	6205	3669
	19.0	27	12341	9009	2763	10159	7416	2073	9390	6855	2461	10400	7592	3173	10000	7300	3305	9400	6862	3536	9000	6570	3669
	22.0	30	13683	8911	2763	11268	7353	2073	10415	6793	2461	11500	7519	3206	11100	7227	3338	10000	7008	3669	9300	6862	3867
	24.0	32	14622	8911	2804	12037	7353	2099	11098	6793	2488	12300	7519	3206	11800	7227	3371	10400	7154	3768	9500	7081	3999
(1.2+2.5)+ (1.8+3.5+3.5)	12.0	18	11134	7638	2639	8024	6481	1994	7427	5982	2350	8200	6643	3041	7900	6351	3173	7400	5986	3404	7100	5694	3536
	14.0	20	11134	7638	2639	8622	6481	1994	8024	6045	2378	8800	6643	3074	8500	6424	3206	7900	5986	3437	7600	5767	3602
	16.0	22	11134	8128	2680	9220	6481	2020	8537	6045	2405	9400	6643	3107	9100	6424	3272	8500	5986	3503	8200	5767	3636
	18.0	25	11939	8715	2721	9817	7042	2047	9049	6543	2433	10000	7227	3140	9600	6935	3272	9000	6497	3536	8600	6205	3669
	19.0	27	12341	9009	2763	10159	7416	2073	9390	6855	2461	10400	7592	3173	10000	7300	3305	9400	6862	3536	9000	6570	3669
	22.0	30	13683	8911	2763	11268	7353	2073	10415	6793	2461	11500	7519	3206	11100	7227	3338	10000	7008	3669	9300	6862	3867
	24.0	32	14622	8911	2804	12037	7353	2099	11098	6793	2488	12300	7519	3206	11800	7227	3371	10400	7154	3768	9500	7081	3999
(1.2+2.5)+ (2.5+2.5+2.5)	12.0	18	11134	7638	2639	8024	6481	1994	7427	5982	2350	8200	6643	3041	7900	6351	3173	7400	5986	3404	7100	5694	3536
	14.0	20	11134	7638	2639	8622	6481	1994	8024	6045	2378	8800	6643	3074	8500	6424	3206	7900	5986	3437	7600	5767	3602
	16.0	22	11134	8128	2680	9220	6481	2020	8537	6045	2405	9400	6643	3107	9100	6424	3272	8500	5986	3503	8200	5767	3636
	18.0	25	11939	8715	2721	9817	7042	2047	9049	6543	2433	10000	7227	3140	9600	6935	3272	9000	6497	3536	8600	6205	3669
	19.0	27	12341	9009	2763	10159	7416	2073	9390	6855	2461	10400	7592	3173	10000	7300	3305	9400	6862	3536	9000	6570	3669
	22.0	30	13683	8911	2763	11268	7353	2073	10415	6793	2461	11500	7519	3206	11100	7227	3338	10000	7008	3669	9300	6862	3867
	24.0	32	14622	8911	2804	12037	7353	2099	11098	6793	2488	12300	7519	3206	11800	7227	3371	10400	7154	3768	9500	7081	3999
(1.2+2.5)+ (2.5+2.5+3.5)	12.0	18	11134	7638	2639	8024	6481	1994	7427	5982	2350	8200	6643	3041	7900	6351	3173	7400	5986	3404	7100	5694	3536
	14.0	20	11134	7638	2639	8622	6481	1994	8024	6045	2378	8800	6643	3074	8500	6424	3206	7900	5986	3437	7600	5767	3602
	16.0	22	11134	8128	2680	9220	6481	2020	8537	6045	2405	9400	6643	3107	9100	6424	3272	8500	5986	3503	8200	5767	3636
	18.0	25	11939	8715	2721	9817	7042	2047	9049	6543	2433	10000	7227	3140	9600	6935	3272	9000	6497	3536	8600	6205	3669
	19.0	27	12341	9009	2763	10159	7416	2073	9390	6855	2461	10400	7592	3173	10000	7300	3305	9400	6862	3536	9000	6570	3669
	22.0	30	13683	8911	2763	11268	7353	2073	10415	6793	2461	11500	7519	3206	11100	7227	3338	10000	7008	3669	9300	6862	3867
	24.0	32	14622	8911	2804	12037	7353	2099	11098	6793	2488	12300	7519	3206	11800	7227	3371	10400	7154	3768	9500	7081	3999
(1.2+3.5)+ (1.2+1.2+1.2)	12.0	18	9241	6340	2020	6660	5379	1527	6164	4965	1799	6806	5514	2328	6557	5271	2429	6142	4968	2606	5893	4726	2707
	14.0	20	9241	6340	2020	7156	5379	1527	6660	5017	1820	7304	5514	2353	7055	5332	2454	6557	4968	2631	6308	4787	2758
	16.0	22	9241	6746	2052	7652	5379	1547	7085	5017	1841	7802	5514	2378	7553	5332	2505	7055	4968	2682	6806	4787	2783
	18.0	25	9909	7234	2083	8148	5845	1567	7510	5431	1863	8300	5998	2404	7968	5756	2505	7470	5393	2707	7138	5150	2808
	19.0	27	10243	7478	2115	8432	6155	1587	7794	5690	1884	8632	6301	2429	8300	6059	2530	7802	5695	2707	7470	5453	2808
	22.0	30	11357	7396	2115	9353	6103	1587	8644	5638	1884	9545	6241	2454	9213	5998	2555	8300	5817	2808	7719	5695	2960
	24.0	32	12136	7396	2146	9990	6103	1607	9211	5638	1905	10209	6241	2454	9794	5998	2581	8632	5938	2884	7885	5877	3061
(1.2+3.5)+ (1.2+1.2+1.8)	12.0	18	9909	6798	2156	7142	5768	1629	6610	5324	1920	7298	5912	2484	7031	5652	2592	6586	5328	2781	6319	5068	2889
	14.0	20	9909	6798	2156	7674	5768	1629	7142	5380	1943	7832	5912	2511	7565	5717	2619	7031	5328	2808	6764	5133	2943
	16.0	22	9909	7234	2189	8205	5768	1651	7598	5380	1965	8366	5912	2538	8099	5717	2673	7565	5328	2862	7298	5133	2970
	18.0	25	10626	7757	2223	8737	6267	1672	8053	5824	1988	8900	6432	2565	8544	6172	2673	8010	5782	2889	7654	5522	2997
	19.0	27	10984	8018	2257	9041	6600	1693	8357	6101	2010	9256	6757	2592	8900	6497	2700	8366	6107	2889	8010	5847	2997
	22.0	30	12178	7931	2257	10029	6545	1693	9269	6045	2010	10235	6692	2619	9879	6432	2727	8900	6237	2997	8277	6107	3159
	24.0	32	13014	7931	2291	10713	6545	1715	9877	6045	2033	10947	6692	2619	10502	6432	2754	9256	6367	3078	8455	6302	3267
(1.2+3.5)+ (1.2+1.2+2.5)	12.0	18	10689	7333	2315	7703	6222	1750	7130	5743	2062	7872	6377	2668	7584	6097	2784	7104	5747	2987	6816	5466	3103
	14.0	20	10689	7333	2315	8277	6222	1750	7703	5803	2086	8448	6377	2697	8160	6167	2813	7584	5747	3016	7296	5536	3161
	16.0	22	10689	7803	2352	8851	6222	1773	8195	5803	2111	9024	6377	2726	8736	6167	2871	8160	5747	3074	7872	5536	3190
	18.0	25	11461	8367	2388	9424	6760	1796	8687	6282	2135	9600	6938	2755	9216	6658	2871	8640	6237	3103	8256	5957	3219
	19.0	27	11848	8649	2424	9752	7119	1819	9015	6581	2159	9984	7288	2784	9600	7008	2900	9024	6588	3103	8640	6307	3219
	22.0	30	13136	8555	2424	10818	7059	1819	9998	6521	2159	11040	7218	2813	10656	6938	2929	9600	6728	3219	8928	6588	3393
	24.0	32	14037	8555	2460	11555	7059	1842	10654	6521	2183	11808	7218	2813	11328	6938	2958	9984	6868	3306	9120	6798	3509

	INDOOR		OUTDOOR TEMPERATURE (°CDB)																				
	EWB	EDB	-10			21			27			32			35			40			43		
	°C	°C	TC	SHC	PI	TC	SHC	PI	TC	SHC	PI	TC	SHC	PI	TC	SHC	PI	TC	SHC	PI	TC	SHC	PI
(1.2+3.5)+ (1.2+1.2+3.5)	12.0	18	11802	8097	2375	8506	6870	1795	7872	6341	2116	8692	7042	2737	8374	6732	2856	7844	6345	3064	7526	6036	3183
	14.0	20	11802	8097	2375	9139	6870	1795	8506	6407	2140	9328	7042	2767	9010	6809	2886	8374	6345	3094	8056	6113	3243
	16.0	22	11802	8616	2412	9773	6870	1819	9049	6407	2165	9964	7042	2797	9646	6809	2945	9010	6345	3154	8692	6113	3273
	18.0	25	12655	9238	2450	10406	7464	1842	9592	6936	2190	10600	7661	2826	10176	7351	2945	9540	6887	3183	9116	6577	3302
	19.0	27	13082	9550	2487	10768	7861	1866	9954	7266	2215	11024	8048	2856	10600	7738	2975	9964	7274	3183	9540	6964	3302
	22.0	30	14504	9446	2487	11944	7795	1866	11040	7200	2215	12190	7970	2886	11766	7661	3005	10600	7428	3302	9858	7274	3481
	24.0	32	15499	9446	2524	12759	7795	1889	11763	7200	2240	13038	7970	2886	12508	7661	3035	11024	7583	3392	10070	7506	3600
(1.2+3.5)+ (1.2+1.2+5)	12.0	18	12248	8402	2830	8827	7129	2139	8170	6581	2521	9020	7307	3261	8690	6986	3403	8140	6585	3651	7810	6263	3793
	14.0	20	12248	8402	2830	9484	7129	2139	8827	6649	2550	9680	7307	3297	9350	7066	3439	8690	6585	3687	8360	6344	3864
	16.0	22	12248	8941	2875	10141	7129	2167	9390	6649	2580	10340	7307	3332	10010	7066	3510	9350	6585	3758	9020	6344	3900
	18.0	25	13133	9587	2919	10799	7746	2195	9954	7198	2610	11000	7950	3368	10560	7629	3510	9900	7147	3793	9460	6826	3935
	19.0	27	13576	9910	2963	11174	8157	2223	10329	7540	2639	11440	8351	3403	11000	8030	3545	10340	7548	3793	9900	7227	3935
	22.0	30	15051	9802	2963	12395	8089	2223	11456	7472	2639	12650	8271	3439	12210	7950	3580	11000	7709	3935	10230	7548	4148
	24.0	32	16084	9802	3007	13240	8089	2252	12207	7472	2669	13530	8271	3439	12980	7950	3616	11440	7869	4041	10450	7789	4289
(1.2+3.5)+ (1.2+1.8+1.8)	12.0	18	10577	7256	2292	7623	6157	1732	7055	5683	2041	7790	6311	2640	7505	6033	2755	7030	5687	2956	6745	5409	3071
	14.0	20	10577	7256	2292	8191	6157	1732	7623	5743	2065	8360	6311	2669	8075	6103	2784	7505	5687	2985	7220	5479	3128
	16.0	22	10577	7722	2327	8759	6157	1754	8110	5743	2089	8930	6311	2698	8645	6103	2841	8075	5687	3042	7790	5479	3157
	18.0	25	11342	8280	2363	9326	6690	1777	8596	6216	2113	9500	6866	2727	9120	6588	2841	8550	6172	3071	8170	5895	3186
	19.0	27	11724	8559	2399	9651	7045	1800	8921	6512	2137	9880	7212	2755	9500	6935	2870	8930	6519	3071	8550	6242	3186
	22.0	30	12999	8466	2399	10705	6986	1800	9894	6453	2137	10925	7143	2784	10545	6866	2899	9500	6658	3186	8835	6519	3358
	24.0	32	13891	8466	2435	11435	6986	1823	10543	6453	2161	11685	7143	2784	11210	6866	2927	9880	6796	3272	9025	6727	3473
(1.2+3.5)+ (1.2+1.8+2.5)	12.0	18	11357	7791	2579	8185	6611	1949	7575	6102	2297	8364	6776	2972	8058	6478	3101	7548	6106	3327	7242	5808	3456
	14.0	20	11357	7791	2579	8794	6611	1949	8185	6166	2324	8976	6776	3004	8670	6552	3133	8058	6106	3359	7752	5882	3521
	16.0	22	11357	8290	2619	9404	6611	1975	8707	6166	2351	9588	6776	3036	9282	6552	3198	8670	6106	3424	8364	5882	3553
	18.0	25	12178	8890	2660	10013	7183	2000	9230	6674	2378	10200	7372	3069	9792	7074	3198	9180	6627	3456	8772	6329	3585
	19.0	27	12588	9189	2700	10362	7564	2026	9578	6992	2405	10608	7744	3101	10200	7446	3230	9588	6999	3456	9180	6701	3585
	22.0	30	13957	9090	2700	11494	7500	2026	10623	6928	2405	11730	7669	3133	11322	7372	3262	10200	7148	3585	9486	6999	3779
	24.0	32	14914	9090	2740	12277	7500	2051	11320	6928	2432	12546	7669	3133	12036	7372	3295	10608	7297	3682	9690	7223	3908
(1.2+3.5)+ (1.2+1.8+3.5)	12.0	18	12248	8402	2771	8827	7129	2094	8170	6581	2468	9020	7307	3192	8690	6986	3331	8140	6585	3574	7810	6263	3713
	14.0	20	12248	8402	2771	9484	7129	2094	8827	6649	2497	9680	7307	3227	9350	7066	3366	8690	6585	3609	8360	6344	3782
	16.0	22	12248	8941	2814	10141	7129	2121	9390	6649	2526	10340	7307	3262	10010	7066	3435	9350	6585	3678	9020	6344	3817
	18.0	25	13133	9587	2857	10799	7746	2149	9954	7198	2555	11000	7950	3297	10560	7629	3435	9900	7147	3713	9460	6826	3852
	19.0	27	13576	9910	2900	11174	8157	2176	10329	7540	2584	11440	8351	3331	11000	8030	3470	10340	7548	3713	9900	7227	3852
	22.0	30	15051	9802	2900	12395	8089	2176	11456	7472	2584	12650	8271	3366	12210	7950	3505	11000	7709	3852	10230	7548	4060
	24.0	32	16084	9802	2944	13240	8089	2204	12207	7472	2613	13530	8271	3366	12980	7950	3539	11440	7869	3956	10450	7789	4199
(1.2+3.5)+ (1.2+1.8+5)	12.0	18	12248	8402	2830	8827	7129	2139	8170	6581	2521	9020	7307	3261	8690	6986	3403	8140	6585	3651	7810	6263	3793
	14.0	20	12248	8402	2830	9484	7129	2139	8827	6649	2550	9680	7307	3297	9350	7066	3439	8690	6585	3687	8360	6344	3864
	16.0	22	12248	8941	2875	10141	7129	2167	9390	6649	2580	10340	7307	3332	10010	7066	3510	9350	6585	3758	9020	6344	3900
	18.0	25	13133	9587	2919	10799	7746	2195	9954	7198	2610	11000	7950	3368	10560	7629	3510	9900	7147	3793	9460	6826	3935
	19.0	27	13576	9910	2963	11174	8157	2223	10329	7540	2639	11440	8351	3403	11000	8030	3545	10340	7548	3793	9900	7227	3935
	22.0	30	15051	9802	2963	12395	8089	2223	11456	7472	2639	12650	8271	3439	12210	7950	3580	11000	7709	3935	10230	7548	4148
	24.0	32	16084	9802	3007	13240	8089	2252	12207	7472	2669	13530	8271	3439	12980	7950	3616	11440	7869	4041	10450	7789	4289
(1.2+3.5)+ (1.2+2.5+2.5)	12.0	18	12136	8326	2771	8747	7064	2094	8095	6521	2468	8938	7241	3192	8611	6923	3331	8066	6525	3574	7739	6206	3713
	14.0	20	12136	8326	2771	9398	7064	2094	8747	6589	2497	9592	7241	3227	9265	7002	3366	8611	6525	3609	8284	6286	3782
	16.0	22	12136	8859	2814	10049	7064	2121	9305	6589	2526	10246	7241	3262	9919	7002	3435	9265	6525	3678	8938	6286	3817
	18.0	25	13014	9500	2857	10701	7676	2149	9863	7132	2555	10900	7877	3297	10464	7559	3435	9810	7082	3713	9374	6763	3852
	19.0	27	13452	9820	2900	11073	8083	2176	10235	7472	2584	11336	8275	3331	10900	7957	3470	10246	7480	3713	9810	7161	3852
	22.0	30	14914	9713	2900	12282	8015	2176	11352	7404	2584	12535	8196	3366	12099	7877	3505	10900	7639	3852	10137	7480	4060
	24.0	32	15938	9713	2944	13120	8015	2204	12096	7404	2613	13407	8196	3366	12862	7877	3539	11336	7798	3956	10355	7718	4199

	INDOOR		OUTDOOR TEMPERATURE (°CDB)																				
	EWB	EDB	-10			21			27			32			35			40			43		
	°C	°C	TC	SHC	PI	TC	SHC	PI	TC	SHC	PI	TC	SHC	PI	TC	SHC	PI	TC	SHC	PI	TC	SHC	PI
(1.2+3.5)+ (1.2+2.5+3.5)	12.0	18	12248	8402	2830	8827	7129	2139	8170	6581	2521	9020	7307	3261	8690	6986	3403	8140	6585	3651	7810	6263	3793
	14.0	20	12248	8402	2830	9484	7129	2139	8827	6649	2550	9680	7307	3297	9350	7066	3439	8690	6585	3687	8360	6344	3864
	16.0	22	12248	8941	2875	10141	7129	2167	9390	6649	2580	10340	7307	3332	10010	7066	3510	9350	6585	3758	9020	6344	3900
	18.0	25	13133	9587	2919	10799	7746	2195	9954	7198	2610	11000	7950	3368	10560	7629	3510	9900	7147	3793	9460	6826	3935
	19.0	27	13576	9910	2963	11174	8157	2223	10329	7540	2639	11440	8351	3403	11000	8030	3545	10340	7548	3793	9900	7227	3935
	22.0	30	15051	9802	2963	12395	8089	2223	11456	7472	2639	12650	8271	3439	12210	7950	3580	11000	7709	3935	10230	7548	4148
	24.0	32	16084	9802	3007	13240	8089	2252	12207	7472	2669	13530	8271	3439	12980	7950	3616	11440	7869	4041	10450	7789	4289
(1.2+3.5)+ (1.2+3.5+3.5)	12.0	18	12248	8402	2830	8827	7129	2139	8170	6581	2521	9020	7307	3261	8690	6986	3403	8140	6585	3651	7810	6263	3793
	14.0	20	12248	8402	2830	9484	7129	2139	8827	6649	2550	9680	7307	3297	9350	7066	3439	8690	6585	3687	8360	6344	3864
	16.0	22	12248	8941	2875	10141	7129	2167	9390	6649	2580	10340	7307	3332	10010	7066	3510	9350	6585	3758	9020	6344	3900
	18.0	25	13133	9587	2919	10799	7746	2195	9954	7198	2610	11000	7950	3368	10560	7629	3510	9900	7147	3793	9460	6826	3935
	19.0	27	13576	9910	2963	11174	8157	2223	10329	7540	2639	11440	8351	3403	11000	8030	3545	10340	7548	3793	9900	7227	3935
	22.0	30	15051	9802	2963	12395	8089	2223	11456	7472	2639	12650	8271	3439	12210	7950	3580	11000	7709	3935	10230	7548	4148
	24.0	32	16084	9802	3007	13240	8089	2252	12207	7472	2669	13530	8271	3439	12980	7950	3616	11440	7869	4041	10450	7789	4289
(1.2+3.5)+ (1.8+1.8+1.8)	12.0	18	11245	7715	2579	8105	6546	1949	7501	6042	2297	8282	6709	2972	7979	6415	3101	7474	6046	3327	7171	5751	3456
	14.0	20	11245	7715	2579	8708	6546	1949	8105	6105	2324	8888	6709	3004	8585	6488	3133	7979	6046	3359	7676	5825	3521
	16.0	22	11245	8209	2619	9312	6546	1975	8622	6105	2351	9494	6709	3036	9191	6488	3198	8585	6046	3424	8282	5825	3553
	18.0	25	12058	8803	2660	9915	7112	2000	9139	6609	2378	10100	7299	3069	9696	7004	3198	9090	6562	3456	8686	6267	3585
	19.0	27	12465	9099	2700	10260	7490	2026	9484	6923	2405	10504	7668	3101	10100	7373	3230	9494	6931	3456	9090	6636	3585
	22.0	30	13820	9000	2700	11381	7427	2026	10519	6860	2405	11615	7594	3133	11211	7299	3262	10100	7078	3585	9393	6931	3779
	24.0	32	14768	9000	2740	12157	7427	2051	11209	6860	2432	12423	7594	3133	11918	7299	3295	10504	7226	3682	9595	7152	3908
(1.2+3.5)+ (1.8+1.8+2.5)	12.0	18	12025	8249	2771	8666	6999	2094	8021	6461	2468	8856	7174	3192	8532	6859	3331	7992	6465	3574	7668	6150	3713
	14.0	20	12025	8249	2771	9312	6999	2094	8666	6528	2497	9504	7174	3227	9180	6938	3366	8532	6465	3609	8208	6228	3782
	16.0	22	12025	8778	2814	9957	6999	2121	9220	6528	2526	10152	7174	3262	9828	6938	3435	9180	6465	3678	8856	6228	3817
	18.0	25	12894	9413	2857	10602	7605	2149	9773	7067	2555	10800	7805	3297	10368	7490	3435	9720	7017	3713	9288	6701	3852
	19.0	27	13329	9730	2900	10971	8009	2176	10141	7403	2584	11232	8199	3331	10800	7884	3470	10152	7411	3713	9720	7096	3852
	22.0	30	14778	9624	2900	12170	7942	2176	11248	7336	2584	12420	8121	3366	11988	7805	3505	10800	7569	3852	10044	7411	4060
	24.0	32	15792	9624	2944	13000	7942	2204	11985	7336	2613	13284	8121	3366	12744	7805	3539	11232	7726	3956	10260	7647	4199
(1.2+3.5)+ (1.8+1.8+3.5)	12.0	18	12248	8402	2830	8827	7129	2139	8170	6581	2521	9020	7307	3261	8690	6986	3403	8140	6585	3651	7810	6263	3793
	14.0	20	12248	8402	2830	9484	7129	2139	8827	6649	2550	9680	7307	3297	9350	7066	3439	8690	6585	3687	8360	6344	3864
	16.0	22	12248	8941	2875	10141	7129	2167	9390	6649	2580	10340	7307	3332	10010	7066	3510	9350	6585	3758	9020	6344	3900
	18.0	25	13133	9587	2919	10799	7746	2195	9954	7198	2610	11000	7950	3368	10560	7629	3510	9900	7147	3793	9460	6826	3935
	19.0	27	13576	9910	2963	11174	8157	2223	10329	7540	2639	11440	8351	3403	11000	8030	3545	10340	7548	3793	9900	7227	3935
	22.0	30	15051	9802	2963	12395	8089	2223	11456	7472	2639	12650	8271	3439	12210	7950	3580	11000	7709	3935	10230	7548	4148
	24.0	32	16084	9802	3007	13240	8089	2252	12207	7472	2669	13530	8271	3439	12980	7950	3616	11440	7869	4041	10450	7789	4289
(1.2+3.5)+ (1.8+1.8+5)	12.0	18	12248	8402	2830	8827	7129	2139	8170	6581	2521	9020	7307	3261	8690	6986	3403	8140	6585	3651	7810	6263	3793
	14.0	20	12248	8402	2830	9484	7129	2139	8827	6649	2550	9680	7307	3297	9350	7066	3439	8690	6585	3687	8360	6344	3864
	16.0	22	12248	8941	2875	10141	7129	2167	9390	6649	2580	10340	7307	3332	10010	7066	3510	9350	6585	3758	9020	6344	3900
	18.0	25	13133	9587	2919	10799	7746	2195	9954	7198	2610	11000	7950	3368	10560	7629	3510	9900	7147	3793	9460	6826	3935
	19.0	27	13576	9910	2963	11174	8157	2223	10329	7540	2639	11440	8351	3403	11000	8030	3545	10340	7548	3793	9900	7227	3935
	22.0	30	15051	9802	2963	12395	8089	2223	11456	7472	2639	12650	8271	3439	12210	7950	3580	11000	7709	3935	10230	7548	4148
	24.0	32	16084	9802	3007	13240	8089	2252	12207	7472	2669	13530	8271	3439	12980	7950	3616	11440	7869	4041	10450	7789	4289
(1.2+3.5)+ (1.8+2.5+2.5)	12.0	18	12248	8402	2830	8827	7129	2139	8170	6581	2521	9020	7307	3261	8690	6986	3403	8140	6585	3651	7810	6263	3793
	14.0	20	12248	8402	2830	9484	7129	2139	8827	6649	2550	9680	7307	3297	9350	7066	3439	8690	6585	3687	8360	6344	3864
	16.0	22	12248	8941	2875	10141	7129	2167	9390	6649	2580	10340	7307	3332	10010	7066	3510	9350	6585	3758	9020	6344	3900
	18.0	25	13133	9587	2919	10799	7746	2195	9954	7198	2610	11000	7950	3368	10560	7629	3510	9900	7147	3793	9460	6826	3935
	19.0	27	13576	9910	2963	11174	8157	2223	10329	7540	2639	11440	8351	3403	11000	8030	3545	10340	7548	3793	9900	7227	3935
	22.0	30	15051	9802	2963	12395	8089	2223	11456	7472	2639	12650	8271	3439	12210	7950	3580	11000	7709	3935	10230	7548	4148
	24.0	32	16084	9802	3007	13240	8089	2252	12207	7472	2669	13530	8271	3439	12980	7950	3616	11440	7869	4041	10450	7789	4289

	INDOOR		OUTDOOR TEMPERATURE (°CDB)																				
	EWB	EDB	-10			21			27			32			35			40			43		
	°C	°C	TC	SHC	PI	TC	SHC	PI	TC	SHC	PI	TC	SHC	PI	TC	SHC	PI	TC	SHC	PI	TC	SHC	PI
(1.2+3.5)+ (1.8+2.5+3.5)	12.0	18	12248	8402	2830	8827	7129	2139	8170	6581	2521	9020	7307	3261	8690	6986	3403	8140	6585	3651	7810	6263	3793
	14.0	20	12248	8402	2830	9484	7129	2139	8827	6649	2550	9680	7307	3297	9350	7066	3439	8690	6585	3687	8360	6344	3864
	16.0	22	12248	8941	2875	10141	7129	2167	9390	6649	2580	10340	7307	3332	10010	7066	3510	9350	6585	3758	9020	6344	3900
	18.0	25	13133	9587	2919	10799	7746	2195	9954	7198	2610	11000	7950	3368	10560	7629	3510	9900	7147	3793	9460	6826	3935
	19.0	27	13576	9910	2963	11174	8157	2223	10329	7540	2639	11440	8351	3403	11000	8030	3545	10340	7548	3793	9900	7227	3935
	22.0	30	15051	9802	2963	12395	8089	2223	11456	7472	2639	12650	8271	3439	12210	7950	3580	11000	7709	3935	10230	7548	4148
	24.0	32	16084	9802	3007	13240	8089	2252	12207	7472	2669	13530	8271	3439	12980	7950	3616	11440	7869	4041	10450	7789	4289
(1.2+3.5)+ (1.8+3.5+3.5)	12.0	18	12248	8402	2830	8827	7129	2139	8170	6581	2521	9020	7307	3261	8690	6986	3403	8140	6585	3651	7810	6263	3793
	14.0	20	12248	8402	2830	9484	7129	2139	8827	6649	2550	9680	7307	3297	9350	7066	3439	8690	6585	3687	8360	6344	3864
	16.0	22	12248	8941	2875	10141	7129	2167	9390	6649	2580	10340	7307	3332	10010	7066	3510	9350	6585	3758	9020	6344	3900
	18.0	25	13133	9587	2919	10799	7746	2195	9954	7198	2610	11000	7950	3368	10560	7629	3510	9900	7147	3793	9460	6826	3935
	19.0	27	13576	9910	2963	11174	8157	2223	10329	7540	2639	11440	8351	3403	11000	8030	3545	10340	7548	3793	9900	7227	3935
	22.0	30	15051	9802	2963	12395	8089	2223	11456	7472	2639	12650	8271	3439	12210	7950	3580	11000	7709	3935	10230	7548	4148
	24.0	32	16084	9802	3007	13240	8089	2252	12207	7472	2669	13530	8271	3439	12980	7950	3616	11440	7869	4041	10450	7789	4289
(1.2+3.5)+ (2.5+2.5+2.5)	12.0	18	12248	8402	2830	8827	7129	2139	8170	6581	2521	9020	7307	3261	8690	6986	3403	8140	6585	3651	7810	6263	3793
	14.0	20	12248	8402	2830	9484	7129	2139	8827	6649	2550	9680	7307	3297	9350	7066	3439	8690	6585	3687	8360	6344	3864
	16.0	22	12248	8941	2875	10141	7129	2167	9390	6649	2580	10340	7307	3332	10010	7066	3510	9350	6585	3758	9020	6344	3900
	18.0	25	13133	9587	2919	10799	7746	2195	9954	7198	2610	11000	7950	3368	10560	7629	3510	9900	7147	3793	9460	6826	3935
	19.0	27	13576	9910	2963	11174	8157	2223	10329	7540	2639	11440	8351	3403	11000	8030	3545	10340	7548	3793	9900	7227	3935
	22.0	30	15051	9802	2963	12395	8089	2223	11456	7472	2639	12650	8271	3439	12210	7950	3580	11000	7709	3935	10230	7548	4148
	24.0	32	16084	9802	3007	13240	8089	2252	12207	7472	2669	13530	8271	3439	12980	7950	3616	11440	7869	4041	10450	7789	4289
(1.2+3.5)+ (2.5+2.5+3.5)	12.0	18	12248	8402	2830	8827	7129	2139	8170	6581	2521	9020	7307	3261	8690	6986	3403	8140	6585	3651	7810	6263	3793
	14.0	20	12248	8402	2830	9484	7129	2139	8827	6649	2550	9680	7307	3297	9350	7066	3439	8690	6585	3687	8360	6344	3864
	16.0	22	12248	8941	2875	10141	7129	2167	9390	6649	2580	10340	7307	3332	10010	7066	3510	9350	6585	3758	9020	6344	3900
	18.0	25	13133	9587	2919	10799	7746	2195	9954	7198	2610	11000	7950	3368	10560	7629	3510	9900	7147	3793	9460	6826	3935
	19.0	27	13576	9910	2963	11174	8157	2223	10329	7540	2639	11440	8351	3403	11000	8030	3545	10340	7548	3793	9900	7227	3935
	22.0	30	15051	9802	2963	12395	8089	2223	11456	7472	2639	12650	8271	3439	12210	7950	3580	11000	7709	3935	10230	7548	4148
	24.0	32	16084	9802	3007	13240	8089	2252	12207	7472	2669	13530	8271	3439	12980	7950	3616	11440	7869	4041	10450	7789	4289
(1.2+5)+ (1.2+1.2+1.2)	12.0	18	10911	7486	2260	7864	6351	1708	7278	5863	2012	8036	6510	2604	7742	6224	2717	7252	5866	2915	6958	5580	3028
	14.0	20	10911	7486	2260	8450	6351	1708	7864	5924	2036	8624	6510	2632	8330	6296	2745	7742	5866	2943	7448	5652	3085
	16.0	22	10911	7965	2295	9035	6351	1730	8366	5924	2060	9212	6510	2660	8918	6296	2802	8330	5866	3000	8036	5652	3113
	18.0	25	11700	8541	2330	9621	6901	1752	8868	6412	2083	9800	7082	2689	9408	6796	2802	8820	6367	3028	8428	6081	3141
	19.0	27	12095	8829	2366	9955	7267	1775	9202	6718	2107	10192	7440	2717	9800	7154	2830	9212	6725	3028	8820	6439	3141
	22.0	30	13409	8733	2366	11043	7206	1775	10206	6657	2107	11270	7369	2745	10878	7082	2858	9800	6868	3141	9114	6725	3311
	24.0	32	14330	8733	2401	11796	7206	1797	10876	6657	2131	12054	7369	2745	11564	7082	2887	10192	7011	3226	9310	6939	3424
(1.2+5)+ (1.2+1.2+1.8)	12.0	18	11580	7944	2395	8345	6740	1810	7724	6222	2133	8528	6909	2760	8216	6605	2880	7696	6225	3090	7384	5922	3210
	14.0	20	11580	7944	2395	8967	6740	1810	8345	6287	2158	9152	6909	2790	8840	6681	2910	8216	6225	3120	7904	5998	3270
	16.0	22	11580	8453	2433	9588	6740	1834	8878	6287	2183	9776	6909	2820	9464	6681	2970	8840	6225	3180	8528	5998	3300
	18.0	25	12417	9064	2470	10210	7324	1858	9411	6805	2209	10400	7516	2850	9984	7212	2970	9360	6757	3210	8944	6453	3330
	19.0	27	12835	9370	2508	10565	7712	1882	9766	7129	2234	10816	7896	2880	10400	7592	3000	9776	7136	3210	9360	6833	3330
	22.0	30	14230	9268	2508	11719	7648	1882	10831	7064	2234	11960	7820	2910	11544	7516	3030	10400	7288	3330	9672	7136	3510
	24.0	32	15207	9268	2545	12518	7648	1905	11541	7064	2259	12792	7820	2910	12272	7516	3060	10816	7440	3420	9880	7364	3630
(1.2+5)+ (1.2+1.2+2.5)	12.0	18	12359	8479	2555	8907	7194	1931	8244	6641	2276	9102	7374	2944	8769	7050	3072	8214	6644	3296	7881	6320	3424
	14.0	20	12359	8479	2555	9570	7194	1931	8907	6710	2302	9768	7374	2976	9435	7131	3104	8769	6644	3328	8436	6401	3488
	16.0	22	12359	9022	2595	10234	7194	1956	9476	6710	2329	10434	7374	3008	10101	7131	3168	9435	6644	3392	9102	6401	3520
	18.0	25	13252	9674	2635	10897	7816	1982	10044	7263	2356	11100	8022	3040	10656	7698	3168	9990	7212	3424	9546	6888	3552
	19.0	27	13699	10000	2675	11276	8231	2007	10423	7609	2383	11544	8427	3072	11100	8103	3200	10434	7617	3424	9990	7293	3552
	22.0	30	15188	9892	2675	12508	8162	2007	11560	7540	2383	12765	8346	3104	12321	8022	3232	11100	7779	3552	10323	7617	3744
	24.0	32	16230	9892	2715	13361	8162	2032	12318	7540	2409	13653	8346	3104	13098	8022	3264	11544	7941	3648	10545	7860	3872

	INDOOR		OUTDOOR TEMPERATURE (°CDB)																				
	EWB	EDB	-10			21			27			32			35			40			43		
	°C	°C	TC	SHC	PI	TC	SHC	PI	TC	SHC	PI	TC	SHC	PI	TC	SHC	PI	TC	SHC	PI	TC	SHC	PI
(1.2+5)+ (1.2+1.2+3.5)	12.0	18	13472	9242	2615	9710	7842	1976	8986	7239	2329	9922	8038	3013	9559	7685	3144	8954	7243	3373	8591	6890	3504
	14.0	20	13472	9242	2615	10433	7842	1976	9710	7314	2356	10648	8038	3046	10285	7773	3177	9559	7243	3406	9196	6978	3570
	16.0	22	13472	9835	2656	11156	7842	2002	10329	7314	2384	11374	8038	3079	11011	7773	3242	10285	7243	3472	9922	6978	3603
	18.0	25	14446	10546	2697	11879	8521	2028	10949	7917	2411	12100	8745	3111	11616	8391	3242	10890	7861	3504	10406	7508	3635
	19.0	27	14933	10901	2737	12292	8973	2054	11362	8294	2438	12584	9186	3144	12100	8833	3275	11374	8303	3504	10890	7950	3635
	22.0	30	16556	10783	2737	13635	8898	2054	12602	8219	2438	13915	9098	3177	13431	8745	3308	12100	8480	3635	11253	8303	3832
	24.0	32	17693	10783	2778	14564	8898	2080	13428	8219	2466	14883	9098	3177	14278	8745	3341	12584	8656	3734	11495	8568	3963
(1.2+5)+ (1.2+1.2+5)	12.0	18	13918	9548	3070	10030	8101	2320	9284	7478	2734	10250	8304	3537	9875	7939	3691	9250	7483	3960	8875	7118	4114
	14.0	20	13918	9548	3070	10777	8101	2320	10030	7556	2766	11000	8304	3576	10625	8030	3730	9875	7483	3999	9500	7209	4191
	16.0	22	13918	10160	3118	11524	8101	2350	10671	7556	2799	11750	8304	3614	11375	8030	3807	10625	7483	4076	10250	7209	4230
	18.0	25	14924	10894	3166	12271	8802	2381	11311	8179	2831	12500	9034	3653	12000	8669	3807	11250	8121	4114	10750	7756	4268
	19.0	27	15427	11262	3214	12698	9270	2412	11738	8569	2863	13000	9490	3691	12500	9125	3845	11750	8578	4114	11250	8213	4268
	22.0	30	17104	11139	3214	14085	9192	2412	13018	8491	2863	14375	9399	3730	13875	9034	3883	12500	8760	4268	11625	8578	4499
	24.0	32	18277	11139	3262	15046	9192	2442	13872	8491	2895	15375	9399	3730	14750	9034	3922	13000	8943	4383	11875	8851	4652
(1.2+5)+ (1.2+1.8+1.8)	12.0	18	12248	8402	2531	8827	7129	1913	8170	6581	2254	9020	7307	2916	8690	6986	3043	8140	6585	3265	7810	6263	3392
	14.0	20	12248	8402	2531	9484	7129	1913	8827	6649	2281	9680	7307	2948	9350	7066	3075	8690	6585	3297	8360	6344	3455
	16.0	22	12248	8941	2571	10141	7129	1938	9390	6649	2307	10340	7307	2980	10010	7066	3138	9350	6585	3360	9020	6344	3487
	18.0	25	13133	9587	2610	10799	7746	1963	9954	7198	2334	11000	7950	3012	10560	7629	3138	9900	7147	3392	9460	6826	3519
	19.0	27	13576	9910	2650	11174	8157	1988	10329	7540	2360	11440	8351	3043	11000	8030	3170	10340	7548	3392	9900	7227	3519
	22.0	30	15051	9802	2650	12395	8089	1988	11456	7472	2360	12650	8271	3075	12210	7950	3202	11000	7709	3519	10230	7548	3709
	24.0	32	16084	9802	2689	13240	8089	2013	12207	7472	2387	13530	8271	3075	12980	7950	3233	11440	7869	3614	10450	7789	3836
(1.2+5)+ (1.2+1.8+2.5)	12.0	18	13027	8937	2818	9389	7583	2130	8689	6999	2510	9594	7772	3248	9243	7431	3389	8658	7004	3636	8307	6662	3777
	14.0	20	13027	8937	2818	10088	7583	2130	9389	7072	2540	10296	7772	3283	9945	7516	3424	9243	7004	3671	8892	6747	3848
	16.0	22	13027	9510	2863	10787	7583	2158	9988	7072	2569	10998	7772	3318	10647	7516	3495	9945	7004	3742	9594	6747	3883
	18.0	25	13969	10197	2907	11486	8239	2186	10587	7656	2599	11700	8456	3354	11232	8114	3495	10530	7601	3777	10062	7260	3918
	19.0	27	14440	10541	2951	11885	8676	2214	10987	8020	2628	12168	8883	3389	11700	8541	3530	10998	8029	3777	10530	7687	3918
	22.0	30	16009	10426	2951	13184	8603	2214	12185	7947	2628	13455	8797	3424	12987	8456	3565	11700	8199	3918	10881	8029	4130
	24.0	32	17108	10426	2995	14083	8603	2242	12984	7947	2658	14391	8797	3424	13806	8456	3601	12168	8370	4024	11115	8285	4271
(1.2+5)+ (1.2+1.8+3.5)	12.0	18	13918	9548	3010	10030	8101	2275	9284	7478	2681	10250	8304	3468	9875	7939	3619	9250	7483	3883	8875	7118	4034
	14.0	20	13918	9548	3010	10777	8101	2275	10030	7556	2712	11000	8304	3506	10625	8030	3657	9875	7483	3921	9500	7209	4109
	16.0	22	13918	10160	3057	11524	8101	2305	10671	7556	2744	11750	8304	3544	11375	8030	3732	10625	7483	3996	10250	7209	4147
	18.0	25	14924	10894	3104	12271	8802	2335	11311	8179	2775	12500	9034	3582	12000	8669	3732	11250	8121	4034	10750	7756	4185
	19.0	27	15427	11262	3151	12698	9270	2364	11738	8569	2807	13000	9490	3619	12500	9125	3770	11750	8578	4034	11250	8213	4185
	22.0	30	17104	11139	3151	14085	9192	2364	13018	8491	2807	14375	9399	3657	13875	9034	3808	12500	8760	4185	11625	8578	4411
	24.0	32	18277	11139	3198	15046	9192	2394	13872	8491	2839	15375	9399	3657	14750	9034	3845	13000	8943	4298	11875	8851	4562
(1.2+5)+ (1.2+1.8+5)	12.0	18	13918	9548	3070	10030	8101	2320	9284	7478	2734	10250	8304	3537	9875	7939	3691	9250	7483	3960	8875	7118	4114
	14.0	20	13918	9548	3070	10777	8101	2320	10030	7556	2766	11000	8304	3576	10625	8030	3730	9875	7483	3999	9500	7209	4191
	16.0	22	13918	10160	3118	11524	8101	2350	10671	7556	2799	11750	8304	3614	11375	8030	3807	10625	7483	4076	10250	7209	4230
	18.0	25	14924	10894	3166	12271	8802	2381	11311	8179	2831	12500	9034	3653	12000	8669	3807	11250	8121	4114	10750	7756	4268
	19.0	27	15427	11262	3214	12698	9270	2412	11738	8569	2863	13000	9490	3691	12500	9125	3845	11750	8578	4114	11250	8213	4268
	22.0	30	17104	11139	3214	14085	9192	2412	13018	8491	2863	14375	9399	3730	13875	9034	3883	12500	8760	4268	11625	8578	4499
	24.0	32	18277	11139	3262	15046	9192	2442	13872	8491	2895	15375	9399	3730	14750	9034	3922	13000	8943	4383	11875	8851	4652
(1.2+5)+ (1.2+2.5+2.5)	12.0	18	13806	9471	3010	9950	8036	2275	9209	7418	2681	10168	8237	3468	9796	7875	3619	9176	7423	3883	8804	7061	4034
	14.0	20	13806	9471	3010	10691	8036	2275	9950	7495	2712	10912	8237	3506	10540	7966	3657	9796	7423	3921	9424	7151	4109
	16.0	22	13806	10079	3057	11432	8036	2305	10585	7495	2744	11656	8237	3544	11284	7966	3732	10540	7423	3996	10168	7151	4147
	18.0	25	14804	10807	3104	12173	8732	2335	11220	8114	2775	12400	8961	3582	11904	8599	3732	11160	8056	4034	10664	7694	4185
	19.0	27	15303	11171	3151	12597	9196	2364	11644	8500	2807	12896	9414	3619	12400	9052	3770	11656	8509	4034	11160	8147	4185
	22.0	30	16967	11050	3151	13973	9118	2364	12914	8423	2807	14260	9324	3657	13764	8961	3808	12400	8690	4185	11532	8509	4411
	24.0	32	18131	11050	3198	14925	9118	2394	13761	8423	2839	15252	9324	3657	14632	8961	3845	12896	8871	4298	11780	8780	4562

	INDOOR		OUTDOOR TEMPERATURE (°CDB)																				
	EWB	EDB	-10			21			27			32			35			40			43		
	°C	°C	TC	SHC	PI	TC	SHC	PI	TC	SHC	PI	TC	SHC	PI	TC	SHC	PI	TC	SHC	PI	TC	SHC	PI
(1.2+5)+ (1.2+2.5+3.5)	12.0	18	13918	9548	3070	10030	8101	2320	9284	7478	2734	10250	8304	3537	9875	7939	3691	9250	7483	3960	8875	7118	4114
	14.0	20	13918	9548	3070	10777	8101	2320	10030	7556	2766	11000	8304	3576	10625	8030	3730	9875	7483	3999	9500	7209	4191
	16.0	22	13918	10160	3118	11524	8101	2350	10671	7556	2799	11750	8304	3614	11375	8030	3807	10625	7483	4076	10250	7209	4230
	18.0	25	14924	10894	3166	12271	8802	2381	11311	8179	2831	12500	9034	3653	12000	8669	3807	11250	8121	4114	10750	7756	4268
	19.0	27	15427	11262	3214	12698	9270	2412	11738	8569	2863	13000	9490	3691	12500	9125	3845	11750	8578	4114	11250	8213	4268
	22.0	30	17104	11139	3214	14085	9192	2412	13018	8491	2863	14375	9399	3730	13875	9034	3883	12500	8760	4268	11625	8578	4499
	24.0	32	18277	11139	3262	15046	9192	2442	13872	8491	2895	15375	9399	3730	14750	9034	3922	13000	8943	4383	11875	8851	4652
(1.2+5)+ (1.2+3.5+3.5)	12.0	18	13918	9548	3070	10030	8101	2320	9284	7478	2734	10250	8304	3537	9875	7939	3691	9250	7483	3960	8875	7118	4114
	14.0	20	13918	9548	3070	10777	8101	2320	10030	7556	2766	11000	8304	3576	10625	8030	3730	9875	7483	3999	9500	7209	4191
	16.0	22	13918	10160	3118	11524	8101	2350	10671	7556	2799	11750	8304	3614	11375	8030	3807	10625	7483	4076	10250	7209	4230
	18.0	25	14924	10894	3166	12271	8802	2381	11311	8179	2831	12500	9034	3653	12000	8669	3807	11250	8121	4114	10750	7756	4268
	19.0	27	15427	11262	3214	12698	9270	2412	11738	8569	2863	13000	9490	3691	12500	9125	3845	11750	8578	4114	11250	8213	4268
	22.0	30	17104	11139	3214	14085	9192	2412	13018	8491	2863	14375	9399	3730	13875	9034	3883	12500	8760	4268	11625	8578	4499
	24.0	32	18277	11139	3262	15046	9192	2442	13872	8491	2895	15375	9399	3730	14750	9034	3922	13000	8943	4383	11875	8851	4652
(1.2+5)+ (1.8+1.8+1.8)	12.0	18	12916	8860	2818	9308	7518	2130	8615	6940	2510	9512	7706	3248	9164	7367	3389	8584	6944	3636	8236	6605	3777
	14.0	20	12916	8860	2818	10001	7518	2130	9308	7012	2540	10208	7706	3283	9860	7452	3424	9164	6944	3671	8816	6690	3848
	16.0	22	12916	9428	2863	10695	7518	2158	9902	7012	2569	10904	7706	3318	10556	7452	3495	9860	6944	3742	9512	6690	3883
	18.0	25	13849	10110	2907	11388	8169	2186	10497	7590	2599	11600	8383	3354	11136	8045	3495	10440	7537	3777	9976	7198	3918
	19.0	27	14316	10451	2951	11784	8602	2214	10893	7952	2628	12064	8807	3389	11600	8468	3530	10904	7960	3777	10440	7621	3918
	22.0	30	15872	10337	2951	13071	8530	2214	12081	7879	2628	13340	8722	3424	12876	8383	3565	11600	8129	3918	10788	7960	4130
	24.0	32	16961	10337	2995	13962	8530	2242	12873	7879	2658	14268	8722	3424	13688	8383	3601	12064	8299	4024	11020	8214	4271
(1.2+5)+ (1.8+1.8+2.5)	12.0	18	13695	9395	3010	9870	7972	2275	9135	7358	2681	10086	8171	3468	9717	7812	3619	9102	7363	3883	8733	7004	4034
	14.0	20	13695	9395	3010	10605	7972	2275	9870	7435	2712	10824	8171	3506	10455	7902	3657	9717	7363	3921	9348	7093	4109
	16.0	22	13695	9997	3057	11340	7972	2305	10500	7435	2744	11562	8171	3544	11193	7902	3732	10455	7363	3996	10086	7093	4147
	18.0	25	14685	10720	3104	12075	8661	2335	11130	8048	2775	12300	8889	3582	11808	8530	3732	11070	7991	4034	10578	7632	4185
	19.0	27	15180	11081	3151	12495	9121	2364	11550	8432	2807	12792	9338	3619	12300	8979	3770	11562	8440	4034	11070	8081	4185
	22.0	30	16830	10961	3151	13860	9045	2364	12810	8355	2807	14145	9248	3657	13653	8889	3808	12300	8620	4185	11439	8440	4411
	24.0	32	17985	10961	3198	14805	9045	2394	13650	8355	2839	15129	9248	3657	14514	8889	3845	12792	8799	4298	11685	8710	4562
(1.2+5)+ (1.8+1.8+3.5)	12.0	18	13918	9548	3070	10030	8101	2320	9284	7478	2734	10250	8304	3537	9875	7939	3691	9250	7483	3960	8875	7118	4114
	14.0	20	13918	9548	3070	10777	8101	2320	10030	7556	2766	11000	8304	3576	10625	8030	3730	9875	7483	3999	9500	7209	4191
	16.0	22	13918	10160	3118	11524	8101	2350	10671	7556	2799	11750	8304	3614	11375	8030	3807	10625	7483	4076	10250	7209	4230
	18.0	25	14924	10894	3166	12271	8802	2381	11311	8179	2831	12500	9034	3653	12000	8669	3807	11250	8121	4114	10750	7756	4268
	19.0	27	15427	11262	3214	12698	9270	2412	11738	8569	2863	13000	9490	3691	12500	9125	3845	11750	8578	4114	11250	8213	4268
	22.0	30	17104	11139	3214	14085	9192	2412	13018	8491	2863	14375	9399	3730	13875	9034	3883	12500	8760	4268	11625	8578	4499
	24.0	32	18277	11139	3262	15046	9192	2442	13872	8491	2895	15375	9399	3730	14750	9034	3922	13000	8943	4383	11875	8851	4652
(1.2+5)+ (1.8+1.8+5)	12.0	18	13918	9548	3070	10030	8101	2320	9284	7478	2734	10250	8304	3537	9875	7939	3691	9250	7483	3960	8875	7118	4114
	14.0	20	13918	9548	3070	10777	8101	2320	10030	7556	2766	11000	8304	3576	10625	8030	3730	9875	7483	3999	9500	7209	4191
	16.0	22	13918	10160	3118	11524	8101	2350	10671	7556	2799	11750	8304	3614	11375	8030	3807	10625	7483	4076	10250	7209	4230
	18.0	25	14924	10894	3166	12271	8802	2381	11311	8179	2831	12500	9034	3653	12000	8669	3807	11250	8121	4114	10750	7756	4268
	19.0	27	15427	11262	3214	12698	9270	2412	11738	8569	2863	13000	9490	3691	12500	9125	3845	11750	8578	4114	11250	8213	4268
	22.0	30	17104	11139	3214	14085	9192	2412	13018	8491	2863	14375	9399	3730	13875	9034	3883	12500	8760	4268	11625	8578	4499
	24.0	32	18277	11139	3262	15046	9192	2442	13872	8491	2895	15375	9399	3730	14750	9034	3922	13000	8943	4383	11875	8851	4652
(1.2+5)+ (1.8+2.5+2.5)	12.0	18	13918	9548	3070	10030	8101	2320	9284	7478	2734	10250	8304	3537	9875	7939	3691	9250	7483	3960	8875	7118	4114
	14.0	20	13918	9548	3070	10777	8101	2320	10030	7556	2766	11000	8304	3576	10625	8030	3730	9875	7483	3999	9500	7209	4191
	16.0	22	13918	10160	3118	11524	8101	2350	10671	7556	2799	11750	8304	3614	11375	8030	3807	10625	7483	4076	10250	7209	4230
	18.0	25	14924	10894	3166	12271	8802	2381	11311	8179	2831	12500	9034	3653	12000	8669	3807	11250	8121	4114	10750	7756	4268
	19.0	27	15427	11262	3214	12698	9270	2412	11738	8569	2863	13000	9490	3691	12500	9125	3845	11750	8578	4114	11250	8213	4268
	22.0	30	17104	11139	3214	14085	9192	2412	13018	8491	2863	14375	9399	3730	13875	9034	3883	12500	8760	4268	11625	8578	4499
	24.0	32	18277	11139	3262	15046	9192	2442	13872	8491	2895	15375	9399	3730	14750	9034	3922	13000	8943	4383	11875	8851	4652

	INDOOR		OUTDOOR TEMPERATURE (°CDB)																				
	EWB	EDB	-10			21			27			32			35			40			43		
	°C	°C	TC	SHC	PI	TC	SHC	PI	TC	SHC	PI	TC	SHC	PI	TC	SHC	PI	TC	SHC	PI	TC	SHC	PI
(1.2+5)+ (1.8+2.5+3.5)	12.0	18	13918	9548	3070	10030	8101	2320	9284	7478	2734	10250	8304	3537	9875	7939	3691	9250	7483	3960	8875	7118	4114
	14.0	20	13918	9548	3070	10777	8101	2320	10030	7556	2766	11000	8304	3576	10625	8030	3730	9875	7483	3999	9500	7209	4191
	16.0	22	13918	10160	3118	11524	8101	2350	10671	7556	2799	11750	8304	3614	11375	8030	3807	10625	7483	4076	10250	7209	4230
	18.0	25	14924	10894	3166	12271	8802	2381	11311	8179	2831	12500	9034	3653	12000	8669	3807	11250	8121	4114	10750	7756	4268
	19.0	27	15427	11262	3214	12698	9270	2412	11738	8569	2863	13000	9490	3691	12500	9125	3845	11750	8578	4114	11250	8213	4268
	22.0	30	17104	11139	3214	14085	9192	2412	13018	8491	2863	14375	9399	3730	13875	9034	3883	12500	8760	4268	11625	8578	4499
	24.0	32	18277	11139	3262	15046	9192	2442	13872	8491	2895	15375	9399	3730	14750	9034	3922	13000	8943	4383	11875	8851	4652
(1.2+5)+ (1.8+3.5+3.5)	12.0	18	13918	9548	3070	10030	8101	2320	9284	7478	2734	10250	8304	3537	9875	7939	3691	9250	7483	3960	8875	7118	4114
	14.0	20	13918	9548	3070	10777	8101	2320	10030	7556	2766	11000	8304	3576	10625	8030	3730	9875	7483	3999	9500	7209	4191
	16.0	22	13918	10160	3118	11524	8101	2350	10671	7556	2799	11750	8304	3614	11375	8030	3807	10625	7483	4076	10250	7209	4230
	18.0	25	14924	10894	3166	12271	8802	2381	11311	8179	2831	12500	9034	3653	12000	8669	3807	11250	8121	4114	10750	7756	4268
	19.0	27	15427	11262	3214	12698	9270	2412	11738	8569	2863	13000	9490	3691	12500	9125	3845	11750	8578	4114	11250	8213	4268
	22.0	30	17104	11139	3214	14085	9192	2412	13018	8491	2863	14375	9399	3730	13875	9034	3883	12500	8760	4268	11625	8578	4499
	24.0	32	18277	11139	3262	15046	9192	2442	13872	8491	2895	15375	9399	3730	14750	9034	3922	13000	8943	4383	11875	8851	4652
(1.2+5)+ (2.5+2.5+2.5)	12.0	18	13918	9548	3070	10030	8101	2320	9284	7478	2734	10250	8304	3537	9875	7939	3691	9250	7483	3960	8875	7118	4114
	14.0	20	13918	9548	3070	10777	8101	2320	10030	7556	2766	11000	8304	3576	10625	8030	3730	9875	7483	3999	9500	7209	4191
	16.0	22	13918	10160	3118	11524	8101	2350	10671	7556	2799	11750	8304	3614	11375	8030	3807	10625	7483	4076	10250	7209	4230
	18.0	25	14924	10894	3166	12271	8802	2381	11311	8179	2831	12500	9034	3653	12000	8669	3807	11250	8121	4114	10750	7756	4268
	19.0	27	15427	11262	3214	12698	9270	2412	11738	8569	2863	13000	9490	3691	12500	9125	3845	11750	8578	4114	11250	8213	4268
	22.0	30	17104	11139	3214	14085	9192	2412	13018	8491	2863	14375	9399	3730	13875	9034	3883	12500	8760	4268	11625	8578	4499
	24.0	32	18277	11139	3262	15046	9192	2442	13872	8491	2895	15375	9399	3730	14750	9034	3922	13000	8943	4383	11875	8851	4652
(1.2+5)+ (2.5+2.5+3.5)	12.0	18	13918	9548	3070	10030	8101	2320	9284	7478	2734	10250	8304	3537	9875	7939	3691	9250	7483	3960	8875	7118	4114
	14.0	20	13918	9548	3070	10777	8101	2320	10030	7556	2766	11000	8304	3576	10625	8030	3730	9875	7483	3999	9500	7209	4191
	16.0	22	13918	10160	3118	11524	8101	2350	10671	7556	2799	11750	8304	3614	11375	8030	3807	10625	7483	4076	10250	7209	4230
	18.0	25	14924	10894	3166	12271	8802	2381	11311	8179	2831	12500	9034	3653	12000	8669	3807	11250	8121	4114	10750	7756	4268
	19.0	27	15427	11262	3214	12698	9270	2412	11738	8569	2863	13000	9490	3691	12500	9125	3845	11750	8578	4114	11250	8213	4268
	22.0	30	17104	11139	3214	14085	9192	2412	13018	8491	2863	14375	9399	3730	13875	9034	3883	12500	8760	4268	11625	8578	4499
	24.0	32	18277	11139	3262	15046	9192	2442	13872	8491	2895	15375	9399	3730	14750	9034	3922	13000	8943	4383	11875	8851	4652
(1.8+1.8)+ (1.8+1.8+1.8)	12.0	18	10021	6874	2371	7222	5833	1792	6684	5384	2112	7380	5979	2732	7110	5716	2851	6660	5387	3059	6390	5125	3178
	14.0	20	10021	6874	2371	7760	5833	1792	7222	5440	2137	7920	5979	2762	7650	5782	2881	7110	5387	3089	6840	5190	3237
	16.0	22	10021	7315	2408	8298	5833	1816	7683	5440	2162	8460	5979	2792	8190	5782	2940	7650	5387	3148	7380	5190	3267
	18.0	25	10745	7844	2445	8835	6338	1839	8144	5889	2186	9000	6504	2822	8640	6242	2940	8100	5847	3178	7740	5585	3297
	19.0	27	11107	8108	2483	9143	6674	1863	8451	6169	2211	9360	6833	2851	9000	6570	2970	8460	6176	3178	8100	5913	3297
	22.0	30	12315	8020	2483	10141	6618	1863	9373	6113	2211	10350	6767	2881	9990	6504	3000	9000	6307	3297	8370	6176	3475
	24.0	32	13160	8020	2520	10833	6618	1886	9988	6113	2236	11070	6767	2881	10620	6504	3029	9360	6439	3386	8550	6373	3594
(1.8+1.8)+ (1.8+1.8+2.5)	12.0	18	10800	7409	2563	7784	6287	1937	7204	5803	2283	7954	6444	2953	7663	6160	3082	7178	5806	3306	6887	5523	3435
	14.0	20	10800	7409	2563	8363	6287	1937	7784	5863	2309	8536	6444	2985	8245	6231	3114	7663	5806	3338	7372	5594	3499
	16.0	22	10800	7884	2603	8943	6287	1962	8280	5863	2336	9118	6444	3017	8827	6231	3178	8245	5806	3403	7954	5594	3531
	18.0	25	11581	8454	2643	9523	6831	1988	8777	6347	2363	9700	7010	3050	9312	6727	3178	8730	6302	3435	8342	6019	3563
	19.0	27	11971	8739	2683	9854	7193	2013	9109	6649	2390	10088	7364	3082	9700	7081	3210	9118	6656	3435	8730	6373	3563
	22.0	30	13272	8644	2683	10930	7133	2013	10102	6589	2390	11155	7293	3114	10767	7010	3242	9700	6798	3563	9021	6656	3756
	24.0	32	14183	8644	2723	11675	7133	2039	10765	6589	2417	11931	7293	3114	11446	7010	3274	10088	6939	3659	9215	6869	3884
(1.8+3.5)+ (1.8+1.8+1.8)	12.0	18	11580	7944	2739	8345	6740	2070	7724	6222	2439	8528	6909	3156	8216	6605	3293	7696	6225	3533	7384	5922	3670
	14.0	20	11580	7944	2739	8967	6740	2070	8345	6287	2468	9152	6909	3190	8840	6681	3327	8216	6225	3567	7904	5998	3739
	16.0	22	11580	8453	2781	9588	6740	2097	8878	6287	2496	9776	6909	3224	9464	6681	3396	8840	6225	3636	8528	5998	3773
	18.0	25	12417	9064	2824	10210	7324	2124	9411	6805	2525	10400	7516	3259	9984	7212	3396	9360	6757	3670	8944	6453	3807
	19.0	27	12835	9370	2867	10565	7712	2151	9766	7129	2554	10816	7896	3293	10400	7592	3430	9776	7136	3670	9360	6833	3807
	22.0	30	14230	9268	2867	11719	7648	2151	10831	7064	2554	11960	7820	3327	11544	7516	3464	10400	7288	3807	9672	7136	4013
	24.0	32	15207	9268	2910	12518	7648	2178	11541	7064	2583	12792	7820	3327	12272	7516	3499	10816	7440	3910	9880	7364	4150

	INDOOR		OUTDOOR TEMPERATURE (°CDB)																				
	EWB	EDB	-10			21			27			32			35			40			43		
	°C	°C	TC	SHC	PI	TC	SHC	PI	TC	SHC	PI	TC	SHC	PI	TC	SHC	PI	TC	SHC	PI	TC	SHC	PI
(1.8+5)+ (1.8+1.8+1.8)	12.0	18	12025	8249	2854	8666	6999	2157	8021	6461	2542	8856	7174	3289	8532	6859	3432	7992	6465	3682	7668	6150	3825
	14.0	20	12025	8249	2854	9312	6999	2157	8666	6528	2572	9504	7174	3325	9180	6938	3468	8532	6465	3718	8208	6228	3897
	16.0	22	12025	8778	2899	9957	6999	2185	9220	6528	2602	10152	7174	3361	9828	6938	3539	9180	6465	3790	8856	6228	3933
	18.0	25	12894	9413	2944	10602	7605	2214	9773	7067	2632	10800	7805	3396	10368	7490	3539	9720	7017	3825	9288	6701	3968
	19.0	27	13329	9730	2988	10971	8009	2242	10141	7403	2662	11232	8199	3432	10800	7884	3575	10152	7411	3825	9720	7096	3968
	22.0	30	14778	9624	2988	12170	7942	2242	11248	7336	2662	12420	8121	3468	11988	7805	3611	10800	7569	3968	10044	7411	4183
	24.0	32	15792	9624	3033	13000	7942	2271	11985	7336	2692	13284	8121	3468	12744	7805	3647	11232	7726	4076	10260	7647	4326
(1.8+2.5)+ (1.8+1.8+2.5)	12.0	18	11468	7867	2659	8265	6675	2009	7650	6162	2368	8446	6842	3064	8137	6542	3197	7622	6166	3430	7313	5865	3563
	14.0	20	11468	7867	2659	8881	6675	2009	8265	6226	2396	9064	6842	3097	8755	6617	3230	8137	6166	3463	7828	5940	3630
	16.0	22	11468	8372	2700	9496	6675	2036	8793	6226	2424	9682	6842	3130	9373	6617	3297	8755	6166	3530	8446	5940	3663
	18.0	25	12297	8977	2742	10112	7253	2062	9320	6740	2452	10300	7444	3164	9888	7143	3297	9270	6692	3563	8858	6391	3696
	19.0	27	12712	9280	2783	10463	7638	2089	9672	7061	2479	10712	7820	3197	10300	7519	3330	9682	7068	3563	9270	6767	3696
	22.0	30	14093	9179	2783	11606	7574	2089	10727	6996	2479	11845	7745	3230	11433	7444	3363	10300	7218	3696	9579	7068	3896
	24.0	32	15061	9179	2825	12398	7574	2115	11430	6996	2507	12669	7745	3230	12154	7444	3397	10712	7369	3796	9785	7293	4029
(1.8+3.5)+ (1.8+1.8+2.5)	12.0	18	12359	8479	2930	8907	7194	2214	8244	6641	2610	9102	7374	3376	8769	7050	3523	8214	6644	3780	7881	6320	3927
	14.0	20	12359	8479	2930	9570	7194	2214	8907	6710	2640	9768	7374	3413	9435	7131	3560	8769	6644	3817	8436	6401	4000
	16.0	22	12359	9022	2976	10234	7194	2243	9476	6710	2671	10434	7374	3450	10101	7131	3633	9435	6644	3890	9102	6401	4037
	18.0	25	13252	9674	3022	10897	7816	2273	10044	7263	2702	11100	8022	3487	10656	7698	3633	9990	7212	3927	9546	6888	4074
	19.0	27	13699	10000	3068	11276	8231	2302	10423	7609	2733	11544	8427	3523	11100	8103	3670	10434	7617	3927	9990	7293	4074
	22.0	30	15188	9892	3068	12508	8162	2302	11560	7540	2733	12765	8346	3560	12321	8022	3707	11100	7779	4074	10323	7617	4294
	24.0	32	16230	9892	3113	13361	8162	2331	12318	7540	2763	13653	8346	3560	13098	8022	3743	11544	7941	4184	10545	7860	4441
(1.8+5)+ (1.8+1.8+2.5)	12.0	18	12804	8784	3046	9228	7453	2302	8541	6880	2713	9430	7639	3510	9085	7304	3662	8510	6884	3929	8165	6548	4082
	14.0	20	12804	8784	3046	9915	7453	2302	9228	6951	2745	10120	7639	3548	9775	7388	3701	9085	6884	3968	8740	6632	4158
	16.0	22	12804	9347	3094	10602	7453	2332	9817	6951	2777	10810	7639	3586	10465	7388	3777	9775	6884	4044	9430	6632	4197
	18.0	25	13730	10023	3141	11290	8098	2362	10406	7525	2809	11500	8311	3624	11040	7975	3777	10350	7472	4082	9890	7136	4235
	19.0	27	14193	10361	3189	11682	8528	2393	10799	7883	2841	11960	8731	3662	11500	8395	3815	10810	7891	4082	10350	7556	4235
	22.0	30	15735	10248	3189	12959	8456	2393	11977	7811	2841	13225	8647	3701	12765	8311	3853	11500	8059	4235	10695	7891	4464
	24.0	32	16815	10248	3236	13842	8456	2423	12762	7811	2872	14145	8647	3701	13570	8311	3891	11960	8227	4349	10925	8143	4616
(1.8+3.5)+ (1.8+1.8+3.5)	12.0	18	12582	8631	2990	9068	7324	2260	8392	6760	2663	9266	7507	3445	8927	7177	3595	8362	6764	3857	8023	6434	4007
	14.0	20	12582	8631	2990	9743	7324	2260	9068	6831	2694	9944	7507	3483	9605	7259	3633	8927	6764	3895	8588	6517	4082
	16.0	22	12582	9185	3037	10418	7324	2289	9646	6831	2726	10622	7507	3520	10283	7259	3708	9605	6764	3970	9266	6517	4120
	18.0	25	13491	9849	3084	11093	7957	2319	10225	7394	2757	11300	8167	3558	10848	7837	3708	10170	7342	4007	9718	7012	4157
	19.0	27	13946	10180	3130	11479	8380	2349	10611	7746	2788	11752	8579	3595	11300	8249	3745	10622	7754	4007	10170	7424	4157
	22.0	30	15462	10070	3130	12733	8309	2349	11769	7676	2788	12995	8496	3633	12543	8167	3782	11300	7919	4157	10509	7754	4382
	24.0	32	16523	10070	3177	13601	8309	2379	12540	7676	2820	13899	8496	3633	13334	8167	3820	11752	8084	4269	10735	8002	4531
(1.8+5)+ (1.8+1.8+3.5)	12.0	18	13027	8937	3106	9389	7583	2347	8689	6999	2766	9594	7772	3579	9243	7431	3734	8658	7004	4007	8307	6662	4162
	14.0	20	13027	8937	3106	10088	7583	2347	9389	7072	2799	10296	7772	3618	9945	7516	3773	9243	7004	4046	8892	6747	4240
	16.0	22	13027	9510	3154	10787	7583	2378	9988	7072	2831	10998	7772	3657	10647	7516	3851	9945	7004	4123	9594	6747	4279
	18.0	25	13969	10197	3203	11486	8239	2409	10587	7656	2864	11700	8456	3696	11232	8114	3851	10530	7601	4162	10062	7260	4318
	19.0	27	14440	10541	3252	11885	8676	2440	10987	8020	2896	12168	8883	3734	11700	8541	3890	10998	8029	4162	10530	7687	4318
	22.0	30	16009	10426	3252	13184	8603	2440	12185	7947	2896	13455	8797	3773	12987	8456	3929	11700	8199	4318	10881	8029	4551
	24.0	32	17108	10426	3300	14083	8603	2471	12984	7947	2929	14391	8797	3773	13806	8456	3968	12168	8370	4435	11115	8285	4707
(1.8+5)+ (1.8+1.8+5)	12.0	18	13027	8937	3106	9389	7583	2347	8689	6999	2766	9594	7772	3579	9243	7431	3734	8658	7004	4007	8307	6662	4162
	14.0	20	13027	8937	3106	10088	7583	2347	9389	7072	2799	10296	7772	3618	9945	7516	3773	9243	7004	4046	8892	6747	4240
	16.0	22	13027	9510	3154	10787	7583	2378	9988	7072	2831	10998	7772	3657	10647	7516	3851	9945	7004	4123	9594	6747	4279
	18.0	25	13969	10197	3203	11486	8239	2409	10587	7656	2864	11700	8456	3696	11232	8114	3851	10530	7601	4162	10062	7260	4318
	19.0	27	14440	10541	3252	11885	8676	2440	10987	8020	2896	12168	8883	3734	11700	8541	3890	10998	8029	4162	10530	7687	4318
	22.0	30	16009	10426	3252	13184	8603	2440	12185	7947	2896	13455	8797	3773	12987	8456	3929	11700	8199	4318	10881	8029	4551
	24.0	32	17108	10426	3300	14083	8603	2471	12984	7947	2929	14391	8797	3773	13806	8456	3968	12168	8370	4435	11115	8285	4707

	INDOOR		OUTDOOR TEMPERATURE (°CDB)																				
	EWB	EDB	-10			21			27			32			35			40			43		
	°C	°C	TC	SHC	PI	TC	SHC	PI	TC	SHC	PI	TC	SHC	PI	TC	SHC	PI	TC	SHC	PI	TC	SHC	PI
(2.5+2.5)+ (1.8+1.8+2.5)	12.0	18	12359	8479	2930	8907	7194	2214	8244	6641	2610	9102	7374	3376	8769	7050	3523	8214	6644	3780	7881	6320	3927
	14.0	20	12359	8479	2930	9570	7194	2214	8907	6710	2640	9768	7374	3413	9435	7131	3560	8769	6644	3817	8436	6401	4000
	16.0	22	12359	9022	2976	10234	7194	2243	9476	6710	2671	10434	7374	3450	10101	7131	3633	9435	6644	3890	9102	6401	4037
	18.0	25	13252	9674	3022	10897	7816	2273	10044	7263	2702	11100	8022	3487	10656	7698	3633	9990	7212	3927	9546	6888	4074
	19.0	27	13699	10000	3068	11276	8231	2302	10423	7609	2733	11544	8427	3523	11100	8103	3670	10434	7617	3927	9990	7293	4074
	22.0	30	15188	9892	3068	12508	8162	2302	11560	7540	2733	12765	8346	3560	12321	8022	3707	11100	7779	4074	10323	7617	4294
	24.0	32	16230	9892	3113	13361	8162	2331	12318	7540	2763	13653	8346	3560	13098	8022	3743	11544	7941	4184	10545	7860	4441
(2.5+3.5)+ (1.8+1.8+2.5)	12.0	18	12582	8631	2994	9068	7324	2263	8392	6760	2667	9266	7507	3450	8927	7177	3600	8362	6764	3863	8023	6434	4013
	14.0	20	12582	8631	2994	9743	7324	2263	9068	6831	2698	9944	7507	3488	9605	7259	3638	8927	6764	3900	8588	6517	4088
	16.0	22	12582	9185	3041	10418	7324	2292	9646	6831	2729	10622	7507	3525	10283	7259	3713	9605	6764	3975	9266	6517	4125
	18.0	25	13491	9849	3088	11093	7957	2322	10225	7394	2761	11300	8167	3563	10848	7837	3713	10170	7342	4013	9718	7012	4163
	19.0	27	13946	10180	3134	11479	8380	2352	10611	7746	2792	11752	8579	3600	11300	8249	3750	10622	7754	4013	10170	7424	4163
	22.0	30	15462	10070	3134	12733	8309	2352	11769	7676	2792	12995	8496	3638	12543	8167	3788	11300	7919	4163	10509	7754	4388
	24.0	32	16523	10070	3181	13601	8309	2382	12540	7676	2823	13899	8496	3638	13334	8167	3825	11752	8084	4275	10735	8002	4538
(1.8+5)+ (1.8+2.5+2.5)	12.0	18	13027	8937	3106	9389	7583	2347	8689	6999	2766	9594	7772	3579	9243	7431	3734	8658	7004	4007	8307	6662	4162
	14.0	20	13027	8937	3106	10088	7583	2347	9389	7072	2799	10296	7772	3618	9945	7516	3773	9243	7004	4046	8892	6747	4240
	16.0	22	13027	9510	3154	10787	7583	2378	9988	7072	2831	10998	7772	3657	10647	7516	3851	9945	7004	4123	9594	6747	4279
	18.0	25	13969	10197	3203	11486	8239	2409	10587	7656	2864	11700	8456	3696	11232	8114	3851	10530	7601	4162	10062	7260	4318
	19.0	27	14440	10541	3252	11885	8676	2440	10987	8020	2896	12168	8883	3734	11700	8541	3890	10998	8029	4162	10530	7687	4318
	22.0	30	16009	10426	3252	13184	8603	2440	12185	7947	2896	13455	8797	3773	12987	8456	3929	11700	8199	4318	10881	8029	4551
	24.0	32	17108	10426	3300	14083	8603	2471	12984	7947	2929	14391	8797	3773	13806	8456	3968	12168	8370	4435	11115	8285	4707
(3.5+3.5)+ (1.8+1.8+2.5)	12.0	18	12804	8784	3046	9228	7453	2302	8541	6880	2713	9430	7639	3510	9085	7304	3662	8510	6884	3929	8165	6548	4082
	14.0	20	12804	8784	3046	9915	7453	2302	9228	6951	2745	10120	7639	3548	9775	7388	3701	9085	6884	3968	8740	6632	4158
	16.0	22	12804	9347	3094	10602	7453	2332	9817	6951	2777	10810	7639	3586	10465	7388	3777	9775	6884	4044	9430	6632	4197
	18.0	25	13730	10023	3141	11290	8098	2362	10406	7525	2809	11500	8311	3624	11040	7975	3777	10350	7472	4082	9890	7136	4235
	19.0	27	14193	10361	3189	11682	8528	2393	10799	7883	2841	11960	8731	3662	11500	8395	3815	10810	7891	4082	10350	7556	4235
	22.0	30	15735	10248	3189	12959	8456	2393	11977	7811	2841	13225	8647	3701	12765	8311	3853	11500	8059	4235	10695	7891	4464
	24.0	32	16815	10248	3236	13842	8456	2423	12762	7811	2872	14145	8647	3701	13570	8311	3891	11960	8227	4349	10925	8143	4616
(1.8+5)+ (1.8+2.5+3.5)	12.0	18	13027	8937	3106	9389	7583	2347	8689	6999	2766	9594	7772	3579	9243	7431	3734	8658	7004	4007	8307	6662	4162
	14.0	20	13027	8937	3106	10088	7583	2347	9389	7072	2799	10296	7772	3618	9945	7516	3773	9243	7004	4046	8892	6747	4240
	16.0	22	13027	9510	3154	10787	7583	2378	9988	7072	2831	10998	7772	3657	10647	7516	3851	9945	7004	4123	9594	6747	4279
	18.0	25	13969	10197	3203	11486	8239	2409	10587	7656	2864	11700	8456	3696	11232	8114	3851	10530	7601	4162	10062	7260	4318
	19.0	27	14440	10541	3252	11885	8676	2440	10987	8020	2896	12168	8883	3734	11700	8541	3890	10998	8029	4162	10530	7687	4318
	22.0	30	16009	10426	3252	13184	8603	2440	12185	7947	2896	13455	8797	3773	12987	8456	3929	11700	8199	4318	10881	8029	4551
	24.0	32	17108	10426	3300	14083	8603	2471	12984	7947	2929	14391	8797	3773	13806	8456	3968	12168	8370	4435	11115	8285	4707
(3.5+3.5)+ (1.8+1.8+3.5)	12.0	18	13027	8937	3106	9389	7583	2347	8689	6999	2766	9594	7772	3579	9243	7431	3734	8658	7004	4007	8307	6662	4162
	14.0	20	13027	8937	3106	10088	7583	2347	9389	7072	2799	10296	7772	3618	9945	7516	3773	9243	7004	4046	8892	6747	4240
	16.0	22	13027	9510	3154	10787	7583	2378	9988	7072	2831	10998	7772	3657	10647	7516	3851	9945	7004	4123	9594	6747	4279
	18.0	25	13969	10197	3203	11486	8239	2409	10587	7656	2864	11700	8456	3696	11232	8114	3851	10530	7601	4162	10062	7260	4318
	19.0	27	14440	10541	3252	11885	8676	2440	10987	8020	2896	12168	8883	3734	11700	8541	3890	10998	8029	4162	10530	7687	4318
	22.0	30	16009	10426	3252	13184	8603	2440	12185	7947	2896	13455	8797	3773	12987	8456	3929	11700	8199	4318	10881	8029	4551
	24.0	32	17108	10426	3300	14083	8603	2471	12984	7947	2929	14391	8797	3773	13806	8456	3968	12168	8370	4435	11115	8285	4707
(2.5+2.5)+ (1.8+2.5+2.5)	12.0	18	12582	8631	2990	9068	7324	2260	8392	6760	2663	9266	7507	3445	8927	7177	3595	8362	6764	3857	8023	6434	4007
	14.0	20	12582	8631	2990	9743	7324	2260	9068	6831	2694	9944	7507	3483	9605	7259	3633	8927	6764	3895	8588	6517	4082
	16.0	22	12582	9185	3037	10418	7324	2289	9646	6831	2726	10622	7507	3520	10283	7259	3708	9605	6764	3970	9266	6517	4120
	18.0	25	13491	9849	3084	11093	7957	2319	10225	7394	2757	11300	8167	3558	10848	7837	3708	10170	7342	4007	9718	7012	4157
	19.0	27	13946	10180	3130	11479	8380	2349	10611	7746	2788	11752	8579	3595	11300	8249	3745	10622	7754	4007	10170	7424	4157
	22.0	30	15462	10070	3130	12733	8309	2349	11769	7676	2788	12995	8496	3633	12543	8167	3782	11300	7919	4157	10509	7754	4382
	24.0	32	16523	10070	3177	13601	8309	2379	12540	7676	2820	13899	8496	3633	13334	8167	3820	11752	8084	4269	10735	8002	4531

	INDOOR		OUTDOOR TEMPERATURE (°CDB)																				
	EWB	EDB	-10			21			27			32			35			40			43		
	°C	°C	TC	SHC	PI	TC	SHC	PI	TC	SHC	PI	TC	SHC	PI	TC	SHC	PI	TC	SHC	PI	TC	SHC	PI
(2.5+3.5)+ (1.8+2.5+2.5)	12.0	18	12804	8784	3054	9228	7453	2308	8541	6880	2720	9430	7639	3519	9085	7304	3672	8510	6884	3940	8165	6548	4093
	14.0	20	12804	8784	3054	9915	7453	2308	9228	6951	2752	10120	7639	3557	9775	7388	3710	9085	6884	3978	8740	6632	4169
	16.0	22	12804	9347	3102	10602	7453	2338	9817	6951	2784	10810	7639	3596	10465	7388	3787	9775	6884	4055	9430	6632	4208
	18.0	25	13730	10023	3149	11290	8098	2369	10406	7525	2816	11500	8311	3634	11040	7975	3787	10350	7472	4093	9890	7136	4246
	19.0	27	14193	10361	3197	11682	8528	2399	10799	7883	2848	11960	8731	3672	11500	8395	3825	10810	7891	4093	10350	7556	4246
	22.0	30	15735	10248	3197	12959	8456	2399	11977	7811	2848	13225	8647	3710	12765	8311	3863	11500	8059	4246	10695	7891	4475
	24.0	32	16815	10248	3245	13842	8456	2429	12762	7811	2880	14145	8647	3710	13570	8311	3902	11960	8227	4361	10925	8143	4628
(1.8+5)+ (2.5+2.5+2.5)	12.0	18	13027	8937	3106	9389	7583	2347	8689	6999	2766	9594	7772	3579	9243	7431	3734	8658	7004	4007	8307	6662	4162
	14.0	20	13027	8937	3106	10088	7583	2347	9389	7072	2799	10296	7772	3618	9945	7516	3773	9243	7004	4046	8892	6747	4240
	16.0	22	13027	9510	3154	10787	7583	2378	9988	7072	2831	10998	7772	3657	10647	7516	3851	9945	7004	4123	9594	6747	4279
	18.0	25	13969	10197	3203	11486	8239	2409	10587	7656	2864	11700	8456	3696	11232	8114	3851	10530	7601	4162	10062	7260	4318
	19.0	27	14440	10541	3252	11885	8676	2440	10987	8020	2896	12168	8883	3734	11700	8541	3890	10998	8029	4162	10530	7687	4318
	22.0	30	16009	10426	3252	13184	8603	2440	12185	7947	2896	13455	8797	3773	12987	8456	3929	11700	8199	4318	10881	8029	4551
	24.0	32	17108	10426	3300	14083	8603	2471	12984	7947	2929	14391	8797	3773	13806	8456	3968	12168	8370	4435	11115	8285	4707
(3.5+3.5)+ (1.8+2.5+2.5)	12.0	18	13027	8937	3106	9389	7583	2347	8689	6999	2766	9594	7772	3579	9243	7431	3734	8658	7004	4007	8307	6662	4162
	14.0	20	13027	8937	3106	10088	7583	2347	9389	7072	2799	10296	7772	3618	9945	7516	3773	9243	7004	4046	8892	6747	4240
	16.0	22	13027	9510	3154	10787	7583	2378	9988	7072	2831	10998	7772	3657	10647	7516	3851	9945	7004	4123	9594	6747	4279
	18.0	25	13969	10197	3203	11486	8239	2409	10587	7656	2864	11700	8456	3696	11232	8114	3851	10530	7601	4162	10062	7260	4318
	19.0	27	14440	10541	3252	11885	8676	2440	10987	8020	2896	12168	8883	3734	11700	8541	3890	10998	8029	4162	10530	7687	4318
	22.0	30	16009	10426	3252	13184	8603	2440	12185	7947	2896	13455	8797	3773	12987	8456	3929	11700	8199	4318	10881	8029	4551
	24.0	32	17108	10426	3300	14083	8603	2471	12984	7947	2929	14391	8797	3773	13806	8456	3968	12168	8370	4435	11115	8285	4707
(2.5+5)+ (1.8+2.5+3.5)	12.0	18	13027	8937	3106	9389	7583	2347	8689	6999	2766	9594	7772	3579	9243	7431	3734	8658	7004	4007	8307	6662	4162
	14.0	20	13027	8937	3106	10088	7583	2347	9389	7072	2799	10296	7772	3618	9945	7516	3773	9243	7004	4046	8892	6747	4240
	16.0	22	13027	9510	3154	10787	7583	2378	9988	7072	2831	10998	7772	3657	10647	7516	3851	9945	7004	4123	9594	6747	4279
	18.0	25	13969	10197	3203	11486	8239	2409	10587	7656	2864	11700	8456	3696	11232	8114	3851	10530	7601	4162	10062	7260	4318
	19.0	27	14440	10541	3252	11885	8676	2440	10987	8020	2896	12168	8883	3734	11700	8541	3890	10998	8029	4162	10530	7687	4318
	22.0	30	16009	10426	3252	13184	8603	2440	12185	7947	2896	13455	8797	3773	12987	8456	3929	11700	8199	4318	10881	8029	4551
	24.0	32	17108	10426	3300	14083	8603	2471	12984	7947	2929	14391	8797	3773	13806	8456	3968	12168	8370	4435	11115	8285	4707
(3.5+3.5)+ (1.8+2.5+3.5)	12.0	18	13027	8937	3106	9389	7583	2347	8689	6999	2766	9594	7772	3579	9243	7431	3734	8658	7004	4007	8307	6662	4162
	14.0	20	13027	8937	3106	10088	7583	2347	9389	7072	2799	10296	7772	3618	9945	7516	3773	9243	7004	4046	8892	6747	4240
	16.0	22	13027	9510	3154	10787	7583	2378	9988	7072	2831	10998	7772	3657	10647	7516	3851	9945	7004	4123	9594	6747	4279
	18.0	25	13969	10197	3203	11486	8239	2409	10587	7656	2864	11700	8456	3696	11232	8114	3851	10530	7601	4162	10062	7260	4318
	19.0	27	14440	10541	3252	11885	8676	2440	10987	8020	2896	12168	8883	3734	11700	8541	3890	10998	8029	4162	10530	7687	4318
	22.0	30	16009	10426	3252	13184	8603	2440	12185	7947	2896	13455	8797	3773	12987	8456	3929	11700	8199	4318	10881	8029	4551
	24.0	32	17108	10426	3300	14083	8603	2471	12984	7947	2929	14391	8797	3773	13806	8456	3968	12168	8370	4435	11115	8285	4707
(3.5+3.5)+ (1.8+3.5+3.5)	12.0	18	13027	8937	3106	9389	7583	2347	8689	6999	2766	9594	7772	3579	9243	7431	3734	8658	7004	4007	8307	6662	4162
	14.0	20	13027	8937	3106	10088	7583	2347	9389	7072	2799	10296	7772	3618	9945	7516	3773	9243	7004	4046	8892	6747	4240
	16.0	22	13027	9510	3154	10787	7583	2378	9988	7072	2831	10998	7772	3657	10647	7516	3851	9945	7004	4123	9594	6747	4279
	18.0	25	13969	10197	3203	11486	8239	2409	10587	7656	2864	11700	8456	3696	11232	8114	3851	10530	7601	4162	10062	7260	4318
	19.0	27	14440	10541	3252	11885	8676	2440	10987	8020	2896	12168	8883	3734	11700	8541	3890	10998	8029	4162	10530	7687	4318
	22.0	30	16009	10426	3252	13184	8603	2440	12185	7947	2896	13455	8797	3773	12987	8456	3929	11700	8199	4318	10881	8029	4551
	24.0	32	17108	10426	3300	14083	8603	2471	12984	7947	2929	14391	8797	3773	13806	8456	3968	12168	8370	4435	11115	8285	4707
(2.5+2.5)+ (2.5+2.5+2.5)	12.0	18	12582	8631	2990	9068	7324	2260	8392	6760	2663	9266	7507	3445	8927	7177	3595	8362	6764	3857	8023	6434	4007
	14.0	20	12582	8631	2990	9743	7324	2260	9068	6831	2694	9944	7507	3483	9605	7259	3633	8927	6764	3895	8588	6517	4082
	16.0	22	12582	9185	3037	10418	7324	2289	9646	6831	2726	10622	7507	3520	10283	7259	3708	9605	6764	3970	9266	6517	4120
	18.0	25	13491	9849	3084	11093	7957	2319	10225	7394	2757	11300	8167	3558	10848	7837	3708	10170	7342	4007	9718	7012	4157
	19.0	27	13946	10180	3130	11479	8380	2349	10611	7746	2788	11752	8579	3595	11300	8249	3745	10622	7754	4007	10170	7424	4157
	22.0	30	15462	10070	3130	12733	8309	2349	11769	7676	2788	12995	8496	3633	12543	8167	3782	11300	7919	4157	10509	7754	4382
	24.0	32	16523	10070	3177	13601	8309	2379	12540	7676	2820	13899	8496	3633	13334	8167	3820	11752	8084	4269	10735	8002	4531

	INDOOR		OUTDOOR TEMPERATURE (°CDB)																				
	EWB	EDB	-10			21			27			32			35			40			43		
	°C	°C	TC	SHC	PI	TC	SHC	PI	TC	SHC	PI	TC	SHC	PI	TC	SHC	PI	TC	SHC	PI	TC	SHC	PI
(2.5+3.5)+ (2.5+2.5+2.5)	12.0	18	12804	8784	3054	9228	7453	2308	8541	6880	2720	9430	7639	3519	9085	7304	3672	8510	6884	3940	8165	6548	4093
	14.0	20	12804	8784	3054	9915	7453	2308	9228	6951	2752	10120	7639	3557	9775	7388	3710	9085	6884	3978	8740	6632	4169
	16.0	22	12804	9347	3102	10602	7453	2338	9817	6951	2784	10810	7639	3596	10465	7388	3787	9775	6884	4055	9430	6632	4208
	18.0	25	13730	10023	3149	11290	8098	2369	10406	7525	2816	11500	8311	3634	11040	7975	3787	10350	7472	4093	9890	7136	4246
	19.0	27	14193	10361	3197	11682	8528	2399	10799	7883	2848	11960	8731	3672	11500	8395	3825	10810	7891	4093	10350	7556	4246
	22.0	30	15735	10248	3197	12959	8456	2399	11977	7811	2848	13225	8647	3710	12765	8311	3863	11500	8059	4246	10695	7891	4475
	24.0	32	16815	10248	3245	13842	8456	2429	12762	7811	2880	14145	8647	3710	13570	8311	3902	11960	8227	4361	10925	8143	4628
(2.5+5)+ (2.5+2.5+2.5)	12.0	18	13027	8937	3106	9389	7583	2347	8689	6999	2766	9594	7772	3579	9243	7431	3734	8658	7004	4007	8307	6662	4162
	14.0	20	13027	8937	3106	10088	7583	2347	9389	7072	2799	10296	7772	3618	9945	7516	3773	9243	7004	4046	8892	6747	4240
	16.0	22	13027	9510	3154	10787	7583	2378	9988	7072	2831	10998	7772	3657	10647	7516	3851	9945	7004	4123	9594	6747	4279
	18.0	25	13969	10197	3203	11486	8239	2409	10587	7656	2864	11700	8456	3696	11232	8114	3851	10530	7601	4162	10062	7260	4318
	19.0	27	14440	10541	3252	11885	8676	2440	10987	8020	2896	12168	8883	3734	11700	8541	3890	10998	8029	4162	10530	7687	4318
	22.0	30	16009	10426	3252	13184	8603	2440	12185	7947	2896	13455	8797	3773	12987	8456	3929	11700	8199	4318	10881	8029	4551
	24.0	32	17108	10426	3300	14083	8603	2471	12984	7947	2929	14391	8797	3773	13806	8456	3968	12168	8370	4435	11115	8285	4707
(3.5+3.5)+ (2.5+2.5+2.5)	12.0	18	13027	8937	3106	9389	7583	2347	8689	6999	2766	9594	7772	3579	9243	7431	3734	8658	7004	4007	8307	6662	4162
	14.0	20	13027	8937	3106	10088	7583	2347	9389	7072	2799	10296	7772	3618	9945	7516	3773	9243	7004	4046	8892	6747	4240
	16.0	22	13027	9510	3154	10787	7583	2378	9988	7072	2831	10998	7772	3657	10647	7516	3851	9945	7004	4123	9594	6747	4279
	18.0	25	13969	10197	3203	11486	8239	2409	10587	7656	2864	11700	8456	3696	11232	8114	3851	10530	7601	4162	10062	7260	4318
	19.0	27	14440	10541	3252	11885	8676	2440	10987	8020	2896	12168	8883	3734	11700	8541	3890	10998	8029	4162	10530	7687	4318
	22.0	30	16009	10426	3252	13184	8603	2440	12185	7947	2896	13455	8797	3773	12987	8456	3929	11700	8199	4318	10881	8029	4551
	24.0	32	17108	10426	3300	14083	8603	2471	12984	7947	2929	14391	8797	3773	13806	8456	3968	12168	8370	4435	11115	8285	4707
(2.5+5)+ (2.5+2.5+3.5)	12.0	18	13027	8937	3106	9389	7583	2347	8689	6999	2766	9594	7772	3579	9243	7431	3734	8658	7004	4007	8307	6662	4162
	14.0	20	13027	8937	3106	10088	7583	2347	9389	7072	2799	10296	7772	3618	9945	7516	3773	9243	7004	4046	8892	6747	4240
	16.0	22	13027	9510	3154	10787	7583	2378	9988	7072	2831	10998	7772	3657	10647	7516	3851	9945	7004	4123	9594	6747	4279
	18.0	25	13969	10197	3203	11486	8239	2409	10587	7656	2864	11700	8456	3696	11232	8114	3851	10530	7601	4162	10062	7260	4318
	19.0	27	14440	10541	3252	11885	8676	2440	10987	8020	2896	12168	8883	3734	11700	8541	3890	10998	8029	4162	10530	7687	4318
	22.0	30	16009	10426	3252	13184	8603	2440	12185	7947	2896	13455	8797	3773	12987	8456	3929	11700	8199	4318	10881	8029	4551
	24.0	32	17108	10426	3300	14083	8603	2471	12984	7947	2929	14391	8797	3773	13806	8456	3968	12168	8370	4435	11115	8285	4707
(3.5+3.5)+ (2.5+2.5+3.5)	12.0	18	13027	8937	3106	9389	7583	2347	8689	6999	2766	9594	7772	3579	9243	7431	3734	8658	7004	4007	8307	6662	4162
	14.0	20	13027	8937	3106	10088	7583	2347	9389	7072	2799	10296	7772	3618	9945	7516	3773	9243	7004	4046	8892	6747	4240
	16.0	22	13027	9510	3154	10787	7583	2378	9988	7072	2831	10998	7772	3657	10647	7516	3851	9945	7004	4123	9594	6747	4279
	18.0	25	13969	10197	3203	11486	8239	2409	10587	7656	2864	11700	8456	3696	11232	8114	3851	10530	7601	4162	10062	7260	4318
	19.0	27	14440	10541	3252	11885	8676	2440	10987	8020	2896	12168	8883	3734	11700	8541	3890	10998	8029	4162	10530	7687	4318
	22.0	30	16009	10426	3252	13184	8603	2440	12185	7947	2896	13455	8797	3773	12987	8456	3929	11700	8199	4318	10881	8029	4551
	24.0	32	17108	10426	3300	14083	8603	2471	12984	7947	2929	14391	8797	3773	13806	8456	3968	12168	8370	4435	11115	8285	4707
(3.5+5)+ (2.5+2.5+3.5)	12.0	18	13695	9395	3266	9870	7972	2468	9135	7358	2908	10086	8171	3763	9717	7812	3926	9102	7363	4213	8733	7004	4376
	14.0	20	13695	9395	3266	10605	7972	2468	9870	7435	2943	10824	8171	3804	10455	7902	3967	9717	7363	4254	9348	7093	4458
	16.0	22	13695	9997	3317	11340	7972	2500	10500	7435	2977	11562	8171	3845	11193	7902	4049	10455	7363	4335	10086	7093	4499
	18.0	25	14685	10720	3368	12075	8661	2533	11130	8048	3011	12300	8889	3886	11808	8530	4049	11070	7991	4376	10578	7632	4540
	19.0	27	15180	11081	3419	12495	9121	2565	11550	8432	3045	12792	9338	3926	12300	8979	4090	11562	8440	4376	11070	8081	4540
	22.0	30	16830	10961	3419	13860	9045	2565	12810	8355	3045	14145	9248	3967	13653	8889	4131	12300	8620	4540	11439	8440	4785
	24.0	32	17985	10961	3470	14805	9045	2598	13650	8355	3079	15129	9248	3967	14514	8889	4172	12792	8799	4663	11685	8710	4949
(1.2+1.2+1.2) + (1.2+1.2+1.2)	12.0	18	8017	5500	1725	5778	4666	1303	5347	4307	1536	5904	4783	1987	5688	4573	2074	5328	4310	2225	5112	4100	2311
	14.0	20	8017	5500	1725	6208	4666	1303	5778	4352	1554	6336	4783	2009	6120	4625	2095	5688	4310	2246	5472	4152	2354
	16.0	22	8017	5852	1752	6638	4666	1320	6146	4352	1572	6768	4783	2030	6552	4625	2138	6120	4310	2290	5904	4152	2376
	18.0	25	8596	6275	1779	7068	5070	1338	6515	4711	1590	7200	5203	2052	6912	4993	2138	6480	4678	2311	6192	4468	2398
	19.0	27	8886	6487	1805	7314	5339	1355	6761	4936	1608	7488	5466	2074	7200	5256	2160	6768	4941	2311	6480	4730	2398
	22.0	30	9852	6416	1805	8113	5294	1355	7499	4891	1608	8280	5414	2095	7992	5203	2182	7200	5046	2398	6696	4941	2527
	24.0	32	10528	6416	1832	8666	5294	1372	7990	4891	1626	8856	5414	2095	8496	5203	2203	7488	5151	2462	6840	5098	2614

	INDOOR		OUTDOOR TEMPERATURE (°CDB)																				
	EWB	EDB	-10			21			27			32			35			40			43		
	°C	°C	TC	SHC	PI	TC	SHC	PI	TC	SHC	PI	TC	SHC	PI	TC	SHC	PI	TC	SHC	PI	TC	SHC	PI
(1.2+1.2+1.2) + (1.2+1.2+1.8)	12.0	18	8685	5958	1860	6259	5055	1406	5793	4666	1657	6396	5182	2144	6162	4954	2237	5772	4669	2400	5538	4441	2493
	14.0	20	8685	5958	1860	6725	5055	1406	6259	4715	1676	6864	5182	2167	6630	5011	2260	6162	4669	2423	5928	4498	2540
	16.0	22	8685	6340	1889	7191	5055	1424	6659	4715	1696	7332	5182	2190	7098	5011	2307	6630	4669	2470	6396	4498	2563
	18.0	25	9312	6798	1918	7657	5493	1443	7058	5104	1715	7800	5637	2214	7488	5409	2307	7020	5068	2493	6708	4840	2586
	19.0	27	9626	7027	1948	7924	5784	1461	7324	5347	1735	8112	5922	2237	7800	5694	2330	7332	5352	2493	7020	5125	2586
	22.0	30	10673	6951	1948	8789	5736	1461	8123	5298	1735	8970	5865	2260	8658	5637	2353	7800	5466	2586	7254	5352	2726
	24.0	32	11405	6951	1977	9389	5736	1480	8656	5298	1754	9594	5865	2260	9204	5637	2377	8112	5580	2656	7410	5523	2819
(1.2+1.2+1.2) + (1.2+1.2+2.5)	12.0	18	9464	6493	2020	6821	5509	1527	6313	5085	1799	6970	5647	2328	6715	5398	2429	6290	5088	2606	6035	4840	2707
	14.0	20	9464	6493	2020	7329	5509	1527	6821	5138	1820	7480	5647	2353	7225	5460	2454	6715	5088	2631	6460	4902	2758
	16.0	22	9464	6909	2052	7837	5509	1547	7256	5138	1841	7990	5647	2378	7735	5460	2505	7225	5088	2682	6970	4902	2783
	18.0	25	10148	7408	2083	8345	5986	1567	7691	5562	1863	8500	6143	2404	8160	5895	2505	7650	5522	2707	7310	5274	2808
	19.0	27	10490	7658	2115	8635	6303	1587	7982	5827	1884	8840	6453	2429	8500	6205	2530	7990	5833	2707	7650	5585	2808
	22.0	30	11630	7575	2115	9578	6250	1587	8852	5774	1884	9775	6391	2454	9435	6143	2555	8500	5957	2808	7905	5833	2960
	24.0	32	12429	7575	2146	10231	6250	1607	9433	5774	1905	10455	6391	2454	10030	6143	2581	8840	6081	2884	8075	6019	3061
(1.2+1.2+1.2) + (1.2+1.2+3.5)	12.0	18	10577	7256	2080	7623	6157	1572	7055	5683	1852	7790	6311	2397	7505	6033	2501	7030	5687	2683	6745	5409	2787
	14.0	20	10577	7256	2080	8191	6157	1572	7623	5743	1874	8360	6311	2423	8075	6103	2527	7505	5687	2709	7220	5479	2839
	16.0	22	10577	7722	2112	8759	6157	1592	8110	5743	1896	8930	6311	2449	8645	6103	2579	8075	5687	2761	7790	5479	2866
	18.0	25	11342	8280	2145	9326	6690	1613	8596	6216	1918	9500	6866	2475	9120	6588	2579	8550	6172	2787	8170	5895	2892
	19.0	27	11724	8559	2177	9651	7045	1634	8921	6512	1940	9880	7212	2501	9500	6935	2605	8930	6519	2787	8550	6242	2892
	22.0	30	12999	8466	2177	10705	6986	1634	9894	6453	1940	10925	7143	2527	10545	6866	2631	9500	6658	2892	8835	6519	3048
	24.0	32	13891	8466	2210	11435	6986	1654	10543	6453	1961	11685	7143	2527	11210	6866	2657	9880	6796	2970	9025	6727	3152
(1.2+1.2+1.2) + (1.2+1.2+5)	12.0	18	11023	7562	2535	7944	6416	1916	7353	5923	2258	8118	6577	2921	7821	6287	3048	7326	5926	3270	7029	5637	3397
	14.0	20	11023	7562	2535	8536	6416	1916	7944	5984	2284	8712	6577	2953	8415	6360	3080	7821	5926	3302	7524	5709	3461
	16.0	22	11023	8047	2575	9127	6416	1941	8451	5984	2311	9306	6577	2985	9009	6360	3143	8415	5926	3366	8118	5709	3493
	18.0	25	11820	8628	2614	9719	6971	1966	8958	6478	2337	9900	7155	3016	9504	6866	3143	8910	6432	3397	8514	6143	3524
	19.0	27	12218	8919	2654	10057	7342	1991	9296	6786	2364	10296	7516	3048	9900	7227	3175	9306	6793	3397	8910	6504	3524
	22.0	30	13546	8822	2654	11156	7280	1991	10310	6725	2364	11385	7444	3080	10989	7155	3207	9900	6938	3524	9207	6793	3715
	24.0	32	14476	8822	2693	11916	7280	2017	10987	6725	2391	12177	7444	3080	11682	7155	3239	10296	7082	3620	9405	7010	3842
(1.2+1.2+1.2) + (1.2+1.8+1.8)	12.0	18	9353	6416	1996	6740	5444	1508	6239	5025	1778	6888	5580	2300	6636	5335	2400	6216	5028	2575	5964	4783	2675
	14.0	20	9353	6416	1996	7242	5444	1508	6740	5078	1799	7392	5580	2325	7140	5396	2425	6636	5028	2600	6384	4844	2725
	16.0	22	9353	6827	2027	7744	5444	1528	7171	5078	1820	7896	5580	2350	7644	5396	2475	7140	5028	2650	6888	4844	2750
	18.0	25	10029	7321	2058	8246	5915	1548	7601	5496	1840	8400	6071	2375	8064	5825	2475	7560	5457	2675	7224	5212	2775
	19.0	27	10367	7568	2090	8533	6229	1568	7888	5758	1861	8736	6377	2400	8400	6132	2500	7896	5764	2675	7560	5519	2775
	22.0	30	11494	7486	2090	9465	6177	1568	8748	5706	1861	9660	6316	2425	9324	6071	2525	8400	5887	2775	7812	5764	2925
	24.0	32	12282	7486	2121	10111	6177	1588	9322	5706	1882	10332	6316	2425	9912	6071	2550	8736	6009	2850	7980	5948	3025
(1.2+1.2+1.2) + (1.2+1.8+2.5)	12.0	18	10132	6951	2284	7302	5898	1726	6758	5444	2034	7462	6045	2631	7189	5779	2746	6734	5447	2946	6461	5182	3060
	14.0	20	10132	6951	2284	7846	5898	1726	7302	5501	2058	8008	6045	2660	7735	5846	2774	7189	5447	2974	6916	5248	3117
	16.0	22	10132	7396	2319	8390	5898	1748	7768	5501	2082	8554	6045	2688	8281	5846	2831	7735	5447	3032	7462	5248	3146
	18.0	25	10865	7931	2355	8934	6408	1771	8234	5954	2106	9100	6577	2717	8736	6311	2831	8190	5912	3060	7826	5647	3175
	19.0	27	11231	8198	2391	9244	6748	1794	8545	6238	2129	9464	6909	2746	9100	6643	2860	8554	6244	3060	8190	5979	3175
	22.0	30	12451	8109	2391	10254	6692	1794	9477	6181	2129	10465	6842	2774	10101	6577	2889	9100	6377	3175	8463	6244	3346
	24.0	32	13306	8109	2426	10953	6692	1816	10099	6181	2153	11193	6842	2774	10738	6577	2917	9464	6510	3260	8645	6444	3461
(1.2+1.2+1.2) + (1.2+1.8+3.5)	12.0	18	11023	7562	2475	7944	6416	1870	7353	5923	2204	8118	6577	2852	7821	6287	2976	7326	5926	3193	7029	5637	3317
	14.0	20	11023	7562	2475	8536	6416	1870	7944	5984	2230	8712	6577	2883	8415	6360	3007	7821	5926	3224	7524	5709	3379
	16.0	22	11023	8047	2514	9127	6416	1895	8451	5984	2256	9306	6577	2914	9009	6360	3069	8415	5926	3286	8118	5709	3410
	18.0	25	11820	8628	2553	9719	6971	1920	8958	6478	2282	9900	7155	2945	9504	6866	3069	8910	6432	3317	8514	6143	3441
	19.0	27	12218	8919	2591	10057	7342	1944	9296	6786	2308	10296	7516	2976	9900	7227	3100	9306	6793	3317	8910	6504	3441
	22.0	30	13546	8822	2591	11156	7280	1944	10310	6725	2308	11385	7444	3007	10989	7155	3131	9900	6938	3441	9207	6793	3627
	24.0	32	14476	8822	2630	11916	7280	1969	10987	6725	2334	12177	7444	3007	11682	7155	3162	10296	7082	3534	9405	7010	3751

	INDOOR		OUTDOOR TEMPERATURE (°CDB)																				
	EWB	EDB	-10			21			27			32			35			40			43		
	°C	°C	TC	SHC	PI	TC	SHC	PI	TC	SHC	PI	TC	SHC	PI	TC	SHC	PI	TC	SHC	PI	TC	SHC	PI
(1.2+1.2+1.2) + (1.2+1.8+5)	12.0	18	11023	7562	2535	7944	6416	1916	7353	5923	2258	8118	6577	2921	7821	6287	3048	7326	5926	3270	7029	5637	3397
	14.0	20	11023	7562	2535	8536	6416	1916	7944	5984	2284	8712	6577	2953	8415	6360	3080	7821	5926	3302	7524	5709	3461
	16.0	22	11023	8047	2575	9127	6416	1941	8451	5984	2311	9306	6577	2985	9009	6360	3143	8415	5926	3366	8118	5709	3493
	18.0	25	11820	8628	2614	9719	6971	1966	8958	6478	2337	9900	7155	3016	9504	6866	3143	8910	6432	3397	8514	6143	3524
	19.0	27	12218	8919	2654	10057	7342	1991	9296	6786	2364	10296	7516	3048	9900	7227	3175	9306	6793	3397	8910	6504	3524
	22.0	30	13546	8822	2654	11156	7280	1991	10310	6725	2364	11385	7444	3080	10989	7155	3207	9900	6938	3524	9207	6793	3715
	24.0	32	14476	8822	2693	11916	7280	2017	10987	6725	2391	12177	7444	3080	11682	7155	3239	10296	7082	3620	9405	7010	3842
(1.2+1.2+1.2) + (1.2+2.5+2.5)	12.0	18	10911	7486	2475	7864	6351	1870	7278	5863	2204	8036	6510	2852	7742	6224	2976	7252	5866	3193	6958	5580	3317
	14.0	20	10911	7486	2475	8450	6351	1870	7864	5924	2230	8624	6510	2883	8330	6296	3007	7742	5866	3224	7448	5652	3379
	16.0	22	10911	7965	2514	9035	6351	1895	8366	5924	2256	9212	6510	2914	8918	6296	3069	8330	5866	3286	8036	5652	3410
	18.0	25	11700	8541	2553	9621	6901	1920	8868	6412	2282	9800	7082	2945	9408	6796	3069	8820	6367	3317	8428	6081	3441
	19.0	27	12095	8829	2591	9955	7267	1944	9202	6718	2308	10192	7440	2976	9800	7154	3100	9212	6725	3317	8820	6439	3441
	22.0	30	13409	8733	2591	11043	7206	1944	10206	6657	2308	11270	7369	3007	10878	7082	3131	9800	6868	3441	9114	6725	3627
	24.0	32	14330	8733	2630	11796	7206	1969	10876	6657	2334	12054	7369	3007	11564	7082	3162	10192	7011	3534	9310	6939	3751
(1.2+1.2+1.2) + (1.2+2.5+3.5)	12.0	18	11023	7562	2535	7944	6416	1916	7353	5923	2258	8118	6577	2921	7821	6287	3048	7326	5926	3270	7029	5637	3397
	14.0	20	11023	7562	2535	8536	6416	1916	7944	5984	2284	8712	6577	2953	8415	6360	3080	7821	5926	3302	7524	5709	3461
	16.0	22	11023	8047	2575	9127	6416	1941	8451	5984	2311	9306	6577	2985	9009	6360	3143	8415	5926	3366	8118	5709	3493
	18.0	25	11820	8628	2614	9719	6971	1966	8958	6478	2337	9900	7155	3016	9504	6866	3143	8910	6432	3397	8514	6143	3524
	19.0	27	12218	8919	2654	10057	7342	1991	9296	6786	2364	10296	7516	3048	9900	7227	3175	9306	6793	3397	8910	6504	3524
	22.0	30	13546	8822	2654	11156	7280	1991	10310	6725	2364	11385	7444	3080	10989	7155	3207	9900	6938	3524	9207	6793	3715
	24.0	32	14476	8822	2693	11916	7280	2017	10987	6725	2391	12177	7444	3080	11682	7155	3239	10296	7082	3620	9405	7010	3842
(1.2+1.2+1.2) + (1.2+3.5+3.5)	12.0	18	11023	7562	2535	7944	6416	1916	7353	5923	2258	8118	6577	2921	7821	6287	3048	7326	5926	3270	7029	5637	3397
	14.0	20	11023	7562	2535	8536	6416	1916	7944	5984	2284	8712	6577	2953	8415	6360	3080	7821	5926	3302	7524	5709	3461
	16.0	22	11023	8047	2575	9127	6416	1941	8451	5984	2311	9306	6577	2985	9009	6360	3143	8415	5926	3366	8118	5709	3493
	18.0	25	11820	8628	2614	9719	6971	1966	8958	6478	2337	9900	7155	3016	9504	6866	3143	8910	6432	3397	8514	6143	3524
	19.0	27	12218	8919	2654	10057	7342	1991	9296	6786	2364	10296	7516	3048	9900	7227	3175	9306	6793	3397	8910	6504	3524
	22.0	30	13546	8822	2654	11156	7280	1991	10310	6725	2364	11385	7444	3080	10989	7155	3207	9900	6938	3524	9207	6793	3715
	24.0	32	14476	8822	2693	11916	7280	2017	10987	6725	2391	12177	7444	3080	11682	7155	3239	10296	7082	3620	9405	7010	3842
(1.2+1.2+1.2) + (1.8+1.8+1.8)	12.0	18	10021	6874	2284	7222	5833	1726	6684	5384	2034	7380	5979	2631	7110	5716	2746	6660	5387	2946	6390	5125	3060
	14.0	20	10021	6874	2284	7760	5833	1726	7222	5440	2058	7920	5979	2660	7650	5782	2774	7110	5387	2974	6840	5190	3117
	16.0	22	10021	7315	2319	8298	5833	1748	7683	5440	2082	8460	5979	2688	8190	5782	2831	7650	5387	3032	7380	5190	3146
	18.0	25	10745	7844	2355	8835	6338	1771	8144	5889	2106	9000	6504	2717	8640	6242	2831	8100	5847	3060	7740	5585	3175
	19.0	27	11107	8108	2391	9143	6674	1794	8451	6169	2129	9360	6833	2746	9000	6570	2860	8460	6176	3060	8100	5913	3175
	22.0	30	12315	8020	2391	10141	6618	1794	9373	6113	2129	10350	6767	2774	9990	6504	2889	9000	6307	3175	8370	6176	3346
	24.0	32	13160	8020	2426	10833	6618	1816	9988	6113	2153	11070	6767	2774	10620	6504	2917	9360	6439	3260	8550	6373	3461
(1.2+1.2+1.2) + (1.8+1.8+2.5)	12.0	18	10800	7409	2475	7784	6287	1870	7204	5803	2204	7954	6444	2852	7663	6160	2976	7178	5806	3193	6887	5523	3317
	14.0	20	10800	7409	2475	8363	6287	1870	7784	5863	2230	8536	6444	2883	8245	6231	3007	7663	5806	3224	7372	5594	3379
	16.0	22	10800	7884	2514	8943	6287	1895	8280	5863	2256	9118	6444	2914	8827	6231	3069	8245	5806	3286	7954	5594	3410
	18.0	25	11581	8454	2553	9523	6831	1920	8777	6347	2282	9700	7010	2945	9312	6727	3069	8730	6302	3317	8342	6019	3441
	19.0	27	11971	8739	2591	9854	7193	1944	9109	6649	2308	10088	7364	2976	9700	7081	3100	9118	6656	3317	8730	6373	3441
	22.0	30	13272	8644	2591	10930	7133	1944	10102	6589	2308	11155	7293	3007	10767	7010	3131	9700	6798	3441	9021	6656	3627
	24.0	32	14183	8644	2630	11675	7133	1969	10765	6589	2334	11931	7293	3007	11446	7010	3162	10088	6939	3534	9215	6869	3751
(1.2+1.2+1.2) + (1.8+1.8+3.5)	12.0	18	11023	7562	2535	7944	6416	1916	7353	5923	2258	8118	6577	2921	7821	6287	3048	7326	5926	3270	7029	5637	3397
	14.0	20	11023	7562	2535	8536	6416	1916	7944	5984	2284	8712	6577	2953	8415	6360	3080	7821	5926	3302	7524	5709	3461
	16.0	22	11023	8047	2575	9127	6416	1941	8451	5984	2311	9306	6577	2985	9009	6360	3143	8415	5926	3366	8118	5709	3493
	18.0	25	11820	8628	2614	9719	6971	1966	8958	6478	2337	9900	7155	3016	9504	6866	3143	8910	6432	3397	8514	6143	3524
	19.0	27	12218	8919	2654	10057	7342	1991	9296	6786	2364	10296	7516	3048	9900	7227	3175	9306	6793	3397	8910	6504	3524
	22.0	30	13546	8822	2654	11156	7280	1991	10310	6725	2364	11385	7444	3080	10989	7155	3207	9900	6938	3524	9207	6793	3715
	24.0	32	14476	8822	2693	11916	7280	2017	10987	6725	2391	12177	7444	3080	11682	7155	3239	10296	7082	3620	9405	7010	3842

	INDOOR		OUTDOOR TEMPERATURE (°CDB)																				
	EWB	EDB	-10			21			27			32			35			40			43		
	°C	°C	TC	SHC	PI	TC	SHC	PI	TC	SHC	PI	TC	SHC	PI	TC	SHC	PI	TC	SHC	PI	TC	SHC	PI
(1.2+1.2+1.2) + (1.8+1.8+5)	12.0	18	11023	7562	2535	7944	6416	1916	7353	5923	2258	8118	6577	2921	7821	6287	3048	7326	5926	3270	7029	5637	3397
	14.0	20	11023	7562	2535	8536	6416	1916	7944	5984	2284	8712	6577	2953	8415	6360	3080	7821	5926	3302	7524	5709	3461
	16.0	22	11023	8047	2575	9127	6416	1941	8451	5984	2311	9306	6577	2985	9009	6360	3143	8415	5926	3366	8118	5709	3493
	18.0	25	11820	8628	2614	9719	6971	1966	8958	6478	2337	9900	7155	3016	9504	6866	3143	8910	6432	3397	8514	6143	3524
	19.0	27	12218	8919	2654	10057	7342	1991	9296	6786	2364	10296	7516	3048	9900	7227	3175	9306	6793	3397	8910	6504	3524
	22.0	30	13546	8822	2654	11156	7280	1991	10310	6725	2364	11385	7444	3080	10989	7155	3207	9900	6938	3524	9207	6793	3715
	24.0	32	14476	8822	2693	11916	7280	2017	10987	6725	2391	12177	7444	3080	11682	7155	3239	10296	7082	3620	9405	7010	3842
(1.2+1.2+1.2) + (1.8+2.5+2.5)	12.0	18	11023	7562	2535	7944	6416	1916	7353	5923	2258	8118	6577	2921	7821	6287	3048	7326	5926	3270	7029	5637	3397
	14.0	20	11023	7562	2535	8536	6416	1916	7944	5984	2284	8712	6577	2953	8415	6360	3080	7821	5926	3302	7524	5709	3461
	16.0	22	11023	8047	2575	9127	6416	1941	8451	5984	2311	9306	6577	2985	9009	6360	3143	8415	5926	3366	8118	5709	3493
	18.0	25	11820	8628	2614	9719	6971	1966	8958	6478	2337	9900	7155	3016	9504	6866	3143	8910	6432	3397	8514	6143	3524
	19.0	27	12218	8919	2654	10057	7342	1991	9296	6786	2364	10296	7516	3048	9900	7227	3175	9306	6793	3397	8910	6504	3524
	22.0	30	13546	8822	2654	11156	7280	1991	10310	6725	2364	11385	7444	3080	10989	7155	3207	9900	6938	3524	9207	6793	3715
	24.0	32	14476	8822	2693	11916	7280	2017	10987	6725	2391	12177	7444	3080	11682	7155	3239	10296	7082	3620	9405	7010	3842
(1.2+1.2+1.2) + (1.8+2.5+3.5)	12.0	18	11023	7562	2535	7944	6416	1916	7353	5923	2258	8118	6577	2921	7821	6287	3048	7326	5926	3270	7029	5637	3397
	14.0	20	11023	7562	2535	8536	6416	1916	7944	5984	2284	8712	6577	2953	8415	6360	3080	7821	5926	3302	7524	5709	3461
	16.0	22	11023	8047	2575	9127	6416	1941	8451	5984	2311	9306	6577	2985	9009	6360	3143	8415	5926	3366	8118	5709	3493
	18.0	25	11820	8628	2614	9719	6971	1966	8958	6478	2337	9900	7155	3016	9504	6866	3143	8910	6432	3397	8514	6143	3524
	19.0	27	12218	8919	2654	10057	7342	1991	9296	6786	2364	10296	7516	3048	9900	7227	3175	9306	6793	3397	8910	6504	3524
	22.0	30	13546	8822	2654	11156	7280	1991	10310	6725	2364	11385	7444	3080	10989	7155	3207	9900	6938	3524	9207	6793	3715
	24.0	32	14476	8822	2693	11916	7280	2017	10987	6725	2391	12177	7444	3080	11682	7155	3239	10296	7082	3620	9405	7010	3842
(1.2+1.2+1.2) + (1.8+3.5+3.5)	12.0	18	11023	7562	2535	7944	6416	1916	7353	5923	2258	8118	6577	2921	7821	6287	3048	7326	5926	3270	7029	5637	3397
	14.0	20	11023	7562	2535	8536	6416	1916	7944	5984	2284	8712	6577	2953	8415	6360	3080	7821	5926	3302	7524	5709	3461
	16.0	22	11023	8047	2575	9127	6416	1941	8451	5984	2311	9306	6577	2985	9009	6360	3143	8415	5926	3366	8118	5709	3493
	18.0	25	11820	8628	2614	9719	6971	1966	8958	6478	2337	9900	7155	3016	9504	6866	3143	8910	6432	3397	8514	6143	3524
	19.0	27	12218	8919	2654	10057	7342	1991	9296	6786	2364	10296	7516	3048	9900	7227	3175	9306	6793	3397	8910	6504	3524
	22.0	30	13546	8822	2654	11156	7280	1991	10310	6725	2364	11385	7444	3080	10989	7155	3207	9900	6938	3524	9207	6793	3715
	24.0	32	14476	8822	2693	11916	7280	2017	10987	6725	2391	12177	7444	3080	11682	7155	3239	10296	7082	3620	9405	7010	3842
(1.2+1.2+1.2) + (2.5+2.5+2.5)	12.0	18	11023	7562	2535	7944	6416	1916	7353	5923	2258	8118	6577	2921	7821	6287	3048	7326	5926	3270	7029	5637	3397
	14.0	20	11023	7562	2535	8536	6416	1916	7944	5984	2284	8712	6577	2953	8415	6360	3080	7821	5926	3302	7524	5709	3461
	16.0	22	11023	8047	2575	9127	6416	1941	8451	5984	2311	9306	6577	2985	9009	6360	3143	8415	5926	3366	8118	5709	3493
	18.0	25	11820	8628	2614	9719	6971	1966	8958	6478	2337	9900	7155	3016	9504	6866	3143	8910	6432	3397	8514	6143	3524
	19.0	27	12218	8919	2654	10057	7342	1991	9296	6786	2364	10296	7516	3048	9900	7227	3175	9306	6793	3397	8910	6504	3524
	22.0	30	13546	8822	2654	11156	7280	1991	10310	6725	2364	11385	7444	3080	10989	7155	3207	9900	6938	3524	9207	6793	3715
	24.0	32	14476	8822	2693	11916	7280	2017	10987	6725	2391	12177	7444	3080	11682	7155	3239	10296	7082	3620	9405	7010	3842
(1.2+1.2+1.2) + (2.5+2.5+3.5)	12.0	18	11023	7562	2535	7944	6416	1916	7353	5923	2258	8118	6577	2921	7821	6287	3048	7326	5926	3270	7029	5637	3397
	14.0	20	11023	7562	2535	8536	6416	1916	7944	5984	2284	8712	6577	2953	8415	6360	3080	7821	5926	3302	7524	5709	3461
	16.0	22	11023	8047	2575	9127	6416	1941	8451	5984	2311	9306	6577	2985	9009	6360	3143	8415	5926	3366	8118	5709	3493
	18.0	25	11820	8628	2614	9719	6971	1966	8958	6478	2337	9900	7155	3016	9504	6866	3143	8910	6432	3397	8514	6143	3524
	19.0	27	12218	8919	2654	10057	7342	1991	9296	6786	2364	10296	7516	3048	9900	7227	3175	9306	6793	3397	8910	6504	3524
	22.0	30	13546	8822	2654	11156	7280	1991	10310	6725	2364	11385	7444	3080	10989	7155	3207	9900	6938	3524	9207	6793	3715
	24.0	32	14476	8822	2693	11916	7280	2017	10987	6725	2391	12177	7444	3080	11682	7155	3239	10296	7082	3620	9405	7010	3842
(1.2+1.2+1.8) + (1.2+1.2+1.2)	12.0	18	8685	5958	1860	6259	5055	1406	5793	4666	1657	6396	5182	2144	6162	4954	2237	5772	4669	2400	5538	4441	2493
	14.0	20	8685	5958	1860	6725	5055	1406	6259	4715	1676	6864	5182	2167	6630	5011	2260	6162	4669	2423	5928	4498	2540
	16.0	22	8685	6340	1889	7191	5055	1424	6659	4715	1696	7332	5182	2190	7098	5011	2307	6630	4669	2470	6396	4498	2563
	18.0	25	9312	6798	1918	7657	5493	1443	7058	5104	1715	7800	5637	2214	7488	5409	2307	7020	5068	2493	6708	4840	2586
	19.0	27	9626	7027	1948	7924	5784	1461	7324	5347	1735	8112	5922	2237	7800	5694	2330	7332	5352	2493	7020	5125	2586
	22.0	30	10673	6951	1948	8789	5736	1461	8123	5298	1735	8970	5865	2260	8658	5637	2353	7800	5466	2586	7254	5352	2726
	24.0	32	11405	6951	1977	9389	5736	1480	8656	5298	1754	9594	5865	2260	9204	5637	2377	8112	5580	2656	7410	5523	2819

	INDOOR		OUTDOOR TEMPERATURE (°CDB)																				
	EWB	EDB	-10			21			27			32			35			40			43		
	°C	°C	TC	SHC	PI	TC	SHC	PI	TC	SHC	PI	TC	SHC	PI	TC	SHC	PI	TC	SHC	PI	TC	SHC	PI
(1.2+1.2+1.8) + (1.2+1.2+1.8)	12.0	18	9353	6416	1996	6740	5444	1508	6239	5025	1778	6888	5580	2300	6636	5335	2400	6216	5028	2575	5964	4783	2675
	14.0	20	9353	6416	1996	7242	5444	1508	6740	5078	1799	7392	5580	2325	7140	5396	2425	6636	5028	2600	6384	4844	2725
	16.0	22	9353	6827	2027	7744	5444	1528	7171	5078	1820	7896	5580	2350	7644	5396	2475	7140	5028	2650	6888	4844	2750
	18.0	25	10029	7321	2058	8246	5915	1548	7601	5496	1840	8400	6071	2375	8064	5825	2475	7560	5457	2675	7224	5212	2775
	19.0	27	10367	7568	2090	8533	6229	1568	7888	5758	1861	8736	6377	2400	8400	6132	2500	7896	5764	2675	7560	5519	2775
	22.0	30	11494	7486	2090	9465	6177	1568	8748	5706	1861	9660	6316	2425	9324	6071	2525	8400	5887	2775	7812	5764	2925
	24.0	32	12282	7486	2121	10111	6177	1588	9322	5706	1882	10332	6316	2425	9912	6071	2550	8736	6009	2850	7980	5948	3025
(1.2+1.2+1.8) + (1.2+1.2+2.5)	12.0	18	10132	6951	2156	7302	5898	1629	6758	5444	1920	7462	6045	2484	7189	5779	2592	6734	5447	2781	6461	5182	2889
	14.0	20	10132	6951	2156	7846	5898	1629	7302	5501	1943	8008	6045	2511	7735	5846	2619	7189	5447	2808	6916	5248	2943
	16.0	22	10132	7396	2189	8390	5898	1651	7768	5501	1965	8554	6045	2538	8281	5846	2673	7735	5447	2862	7462	5248	2970
	18.0	25	10865	7931	2223	8934	6408	1672	8234	5954	1988	9100	6577	2565	8736	6311	2673	8190	5912	2889	7826	5647	2997
	19.0	27	11231	8198	2257	9244	6748	1693	8545	6238	2010	9464	6909	2592	9100	6643	2700	8554	6244	2889	8190	5979	2997
	22.0	30	12451	8109	2257	10254	6692	1693	9477	6181	2010	10465	6842	2619	10101	6577	2727	9100	6377	2997	8463	6244	3159
	24.0	32	13306	8109	2291	10953	6692	1715	10099	6181	2033	11193	6842	2619	10738	6577	2754	9464	6510	3078	8645	6444	3267
(1.2+1.2+1.8) + (1.2+1.2+3.5)	12.0	18	11245	7715	2216	8105	6546	1674	7501	6042	1973	8282	6709	2553	7979	6415	2664	7474	6046	2858	7171	5751	2969
	14.0	20	11245	7715	2216	8708	6546	1674	8105	6105	1997	8888	6709	2581	8585	6488	2692	7979	6046	2886	7676	5825	3025
	16.0	22	11245	8209	2250	9312	6546	1696	8622	6105	2020	9494	6709	2609	9191	6488	2747	8585	6046	2942	8282	5825	3053
	18.0	25	12058	8803	2285	9915	7112	1718	9139	6609	2043	10100	7299	2636	9696	7004	2747	9090	6562	2969	8686	6267	3080
	19.0	27	12465	9099	2320	10260	7490	1740	9484	6923	2066	10504	7668	2664	10100	7373	2775	9494	6931	2969	9090	6636	3080
	22.0	30	13820	9000	2320	11381	7427	1740	10519	6860	2066	11615	7594	2692	11211	7299	2803	10100	7078	3080	9393	6931	3247
	24.0	32	14768	9000	2354	12157	7427	1762	11209	6860	2089	12423	7594	2692	11918	7299	2831	10504	7226	3164	9595	7152	3358
(1.2+1.2+1.8) + (1.2+1.2+5)	12.0	18	11691	8020	2671	8426	6805	2018	7798	6282	2379	8610	6975	3077	8295	6669	3211	7770	6285	3445	7455	5979	3579
	14.0	20	11691	8020	2671	9053	6805	2018	8426	6347	2407	9240	6975	3111	8925	6745	3245	8295	6285	3479	7980	6055	3646
	16.0	22	11691	8534	2713	9680	6805	2045	8963	6347	2435	9870	6975	3144	9555	6745	3312	8925	6285	3546	8610	6055	3680
	18.0	25	12536	9151	2754	10308	7394	2071	9501	6870	2463	10500	7588	3178	10080	7282	3312	9450	6822	3579	9030	6515	3713
	19.0	27	12959	9460	2796	10666	7787	2098	9860	7198	2491	10920	7972	3211	10500	7665	3345	9870	7205	3579	9450	6899	3713
	22.0	30	14367	9357	2796	11832	7721	2098	10935	7132	2491	12075	7895	3245	11655	7588	3378	10500	7358	3713	9765	7205	3914
	24.0	32	15353	9357	2838	12638	7721	2124	11652	7132	2519	12915	7895	3245	12390	7588	3412	10920	7512	3813	9975	7435	4047
(1.2+1.2+1.8) + (1.2+1.8+1.8)	12.0	18	10021	6874	2132	7222	5833	1611	6684	5384	1899	7380	5979	2456	7110	5716	2563	6660	5387	2750	6390	5125	2857
	14.0	20	10021	6874	2132	7760	5833	1611	7222	5440	1921	7920	5979	2483	7650	5782	2590	7110	5387	2777	6840	5190	2910
	16.0	22	10021	7315	2165	8298	5833	1632	7683	5440	1943	8460	5979	2510	8190	5782	2643	7650	5387	2830	7380	5190	2937
	18.0	25	10745	7844	2198	8835	6338	1653	8144	5889	1966	9000	6504	2537	8640	6242	2643	8100	5847	2857	7740	5585	2964
	19.0	27	11107	8108	2232	9143	6674	1675	8451	6169	1988	9360	6833	2563	9000	6570	2670	8460	6176	2857	8100	5913	2964
	22.0	30	12315	8020	2232	10141	6618	1675	9373	6113	1988	10350	6767	2590	9990	6504	2697	9000	6307	2964	8370	6176	3124
	24.0	32	13160	8020	2265	10833	6618	1696	9988	6113	2010	11070	6767	2590	10620	6504	2723	9360	6439	3044	8550	6373	3231
(1.2+1.2+1.8) + (1.2+1.8+2.5)	12.0	18	10800	7409	2419	7784	6287	1828	7204	5803	2155	7954	6444	2788	7663	6160	2909	7178	5806	3121	6887	5523	3242
	14.0	20	10800	7409	2419	8363	6287	1828	7784	5863	2180	8536	6444	2818	8245	6231	2939	7663	5806	3151	7372	5594	3303
	16.0	22	10800	7884	2457	8943	6287	1852	8280	5863	2205	9118	6444	2848	8827	6231	3000	8245	5806	3212	7954	5594	3333
	18.0	25	11581	8454	2495	9523	6831	1876	8777	6347	2231	9700	7010	2879	9312	6727	3000	8730	6302	3242	8342	6019	3363
	19.0	27	11971	8739	2533	9854	7193	1900	9109	6649	2256	10088	7364	2909	9700	7081	3030	9118	6656	3242	8730	6373	3363
	22.0	30	13272	8644	2533	10930	7133	1900	10102	6589	2256	11155	7293	2939	10767	7010	3060	9700	6798	3363	9021	6656	3545
	24.0	32	14183	8644	2570	11675	7133	1924	10765	6589	2281	11931	7293	2939	11446	7010	3091	10088	6939	3454	9215	6869	3666
(1.2+1.2+1.8) + (1.2+1.8+3.5)	12.0	18	11691	8020	2611	8426	6805	1973	7798	6282	2325	8610	6975	3008	8295	6669	3139	7770	6285	3368	7455	5979	3499
	14.0	20	11691	8020	2611	9053	6805	1973	8426	6347	2353	9240	6975	3041	8925	6745	3172	8295	6285	3401	7980	6055	3564
	16.0	22	11691	8534	2652	9680	6805	1999	8963	6347	2380	9870	6975	3074	9555	6745	3237	8925	6285	3466	8610	6055	3597
	18.0	25	12536	9151	2692	10308	7394	2025	9501	6870	2407	10500	7588	3107	10080	7282	3237	9450	6822	3499	9030	6515	3630
	19.0	27	12959	9460	2733	10666	7787	2051	9860	7198	2435	10920	7972	3139	10500	7665	3270	9870	7205	3499	9450	6899	3630
	22.0	30	14367	9357	2733	11832	7721	2051	10935	7132	2435	12075	7895	3172	11655	7588	3303	10500	7358	3630	9765	7205	3826
	24.0	32	15353	9357	2774	12638	7721	2077	11652	7132	2462	12915	7895	3172	12390	7588	3335	10920	7512	3728	9975	7435	3957

	INDOOR		OUTDOOR TEMPERATURE (°CDB)																				
	EWB	EDB	-10			21			27			32			35			40			43		
	°C	°C	TC	SHC	PI	TC	SHC	PI	TC	SHC	PI	TC	SHC	PI	TC	SHC	PI	TC	SHC	PI	TC	SHC	PI
(1.2+1.2+1.8) + (1.2+1.8+5)	12.0	18	11691	8020	2671	8426	6805	2018	7798	6282	2379	8610	6975	3077	8295	6669	3211	7770	6285	3445	7455	5979	3579
	14.0	20	11691	8020	2671	9053	6805	2018	8426	6347	2407	9240	6975	3111	8925	6745	3245	8295	6285	3479	7980	6055	3646
	16.0	22	11691	8534	2713	9680	6805	2045	8963	6347	2435	9870	6975	3144	9555	6745	3312	8925	6285	3546	8610	6055	3680
	18.0	25	12536	9151	2754	10308	7394	2071	9501	6870	2463	10500	7588	3178	10080	7282	3312	9450	6822	3579	9030	6515	3713
	19.0	27	12959	9460	2796	10666	7787	2098	9860	7198	2491	10920	7972	3211	10500	7665	3345	9870	7205	3579	9450	6899	3713
	22.0	30	14367	9357	2796	11832	7721	2098	10935	7132	2491	12075	7895	3245	11655	7588	3378	10500	7358	3713	9765	7205	3914
	24.0	32	15353	9357	2838	12638	7721	2124	11652	7132	2519	12915	7895	3245	12390	7588	3412	10920	7512	3813	9975	7435	4047
(1.2+1.2+1.8) + (1.2+2.5+2.5)	12.0	18	11580	7944	2611	8345	6740	1973	7724	6222	2325	8528	6909	3008	8216	6605	3139	7696	6225	3368	7384	5922	3499
	14.0	20	11580	7944	2611	8967	6740	1973	8345	6287	2353	9152	6909	3041	8840	6681	3172	8216	6225	3401	7904	5998	3564
	16.0	22	11580	8453	2652	9588	6740	1999	8878	6287	2380	9776	6909	3074	9464	6681	3237	8840	6225	3466	8528	5998	3597
	18.0	25	12417	9064	2692	10210	7324	2025	9411	6805	2407	10400	7516	3107	9984	7212	3237	9360	6757	3499	8944	6453	3630
	19.0	27	12835	9370	2733	10565	7712	2051	9766	7129	2435	10816	7896	3139	10400	7592	3270	9776	7136	3499	9360	6833	3630
	22.0	30	14230	9268	2733	11719	7648	2051	10831	7064	2435	11960	7820	3172	11544	7516	3303	10400	7288	3630	9672	7136	3826
	24.0	32	15207	9268	2774	12518	7648	2077	11541	7064	2462	12792	7820	3172	12272	7516	3335	10816	7440	3728	9880	7364	3957
(1.2+1.2+1.8) + (1.2+2.5+3.5)	12.0	18	11691	8020	2671	8426	6805	2018	7798	6282	2379	8610	6975	3077	8295	6669	3211	7770	6285	3445	7455	5979	3579
	14.0	20	11691	8020	2671	9053	6805	2018	8426	6347	2407	9240	6975	3111	8925	6745	3245	8295	6285	3479	7980	6055	3646
	16.0	22	11691	8534	2713	9680	6805	2045	8963	6347	2435	9870	6975	3144	9555	6745	3312	8925	6285	3546	8610	6055	3680
	18.0	25	12536	9151	2754	10308	7394	2071	9501	6870	2463	10500	7588	3178	10080	7282	3312	9450	6822	3579	9030	6515	3713
	19.0	27	12959	9460	2796	10666	7787	2098	9860	7198	2491	10920	7972	3211	10500	7665	3345	9870	7205	3579	9450	6899	3713
	22.0	30	14367	9357	2796	11832	7721	2098	10935	7132	2491	12075	7895	3245	11655	7588	3378	10500	7358	3713	9765	7205	3914
	24.0	32	15353	9357	2838	12638	7721	2124	11652	7132	2519	12915	7895	3245	12390	7588	3412	10920	7512	3813	9975	7435	4047
(1.2+1.2+1.8) + (1.2+3.5+3.5)	12.0	18	11691	8020	2671	8426	6805	2018	7798	6282	2379	8610	6975	3077	8295	6669	3211	7770	6285	3445	7455	5979	3579
	14.0	20	11691	8020	2671	9053	6805	2018	8426	6347	2407	9240	6975	3111	8925	6745	3245	8295	6285	3479	7980	6055	3646
	16.0	22	11691	8534	2713	9680	6805	2045	8963	6347	2435	9870	6975	3144	9555	6745	3312	8925	6285	3546	8610	6055	3680
	18.0	25	12536	9151	2754	10308	7394	2071	9501	6870	2463	10500	7588	3178	10080	7282	3312	9450	6822	3579	9030	6515	3713
	19.0	27	12959	9460	2796	10666	7787	2098	9860	7198	2491	10920	7972	3211	10500	7665	3345	9870	7205	3579	9450	6899	3713
	22.0	30	14367	9357	2796	11832	7721	2098	10935	7132	2491	12075	7895	3245	11655	7588	3378	10500	7358	3713	9765	7205	3914
	24.0	32	15353	9357	2838	12638	7721	2124	11652	7132	2519	12915	7895	3245	12390	7588	3412	10920	7512	3813	9975	7435	4047
(1.2+1.2+1.8) + (1.8+1.8+1.8)	12.0	18	10689	7333	2419	7703	6222	1828	7130	5743	2155	7872	6377	2788	7584	6097	2909	7104	5747	3121	6816	5466	3242
	14.0	20	10689	7333	2419	8277	6222	1828	7703	5803	2180	8448	6377	2818	8160	6167	2939	7584	5747	3151	7296	5536	3303
	16.0	22	10689	7803	2457	8851	6222	1852	8195	5803	2205	9024	6377	2848	8736	6167	3000	8160	5747	3212	7872	5536	3333
	18.0	25	11461	8367	2495	9424	6760	1876	8687	6282	2231	9600	6938	2879	9216	6658	3000	8640	6237	3242	8256	5957	3363
	19.0	27	11848	8649	2533	9752	7119	1900	9015	6581	2256	9984	7288	2909	9600	7008	3030	9024	6588	3242	8640	6307	3363
	22.0	30	13136	8555	2533	10818	7059	1900	9998	6521	2256	11040	7218	2939	10656	6938	3060	9600	6728	3363	8928	6588	3545
	24.0	32	14037	8555	2570	11555	7059	1924	10654	6521	2281	11808	7218	2939	11328	6938	3091	9984	6868	3454	9120	6798	3666
(1.2+1.2+1.8) + (1.8+1.8+2.5)	12.0	18	11468	7867	2611	8265	6675	1973	7650	6162	2325	8446	6842	3008	8137	6542	3139	7622	6166	3368	7313	5865	3499
	14.0	20	11468	7867	2611	8881	6675	1973	8265	6226	2353	9064	6842	3041	8755	6617	3172	8137	6166	3401	7828	5940	3564
	16.0	22	11468	8372	2652	9496	6675	1999	8793	6226	2380	9682	6842	3074	9373	6617	3237	8755	6166	3466	8446	5940	3597
	18.0	25	12297	8977	2692	10112	7253	2025	9320	6740	2407	10300	7444	3107	9888	7143	3237	9270	6692	3499	8858	6391	3630
	19.0	27	12712	9280	2733	10463	7638	2051	9672	7061	2435	10712	7820	3139	10300	7519	3270	9682	7068	3499	9270	6767	3630
	22.0	30	14093	9179	2733	11606	7574	2051	10727	6996	2435	11845	7745	3172	11433	7444	3303	10300	7218	3630	9579	7068	3826
	24.0	32	15061	9179	2774	12398	7574	2077	11430	6996	2462	12669	7745	3172	12154	7444	3335	10712	7369	3728	9785	7293	3957
(1.2+1.2+1.8) + (1.8+1.8+3.5)	12.0	18	11691	8020	2671	8426	6805	2018	7798	6282	2379	8610	6975	3077	8295	6669	3211	7770	6285	3445	7455	5979	3579
	14.0	20	11691	8020	2671	9053	6805	2018	8426	6347	2407	9240	6975	3111	8925	6745	3245	8295	6285	3479	7980	6055	3646
	16.0	22	11691	8534	2713	9680	6805	2045	8963	6347	2435	9870	6975	3144	9555	6745	3312	8925	6285	3546	8610	6055	3680
	18.0	25	12536	9151	2754	10308	7394	2071	9501	6870	2463	10500	7588	3178	10080	7282	3312	9450	6822	3579	9030	6515	3713
	19.0	27	12959	9460	2796	10666	7787	2098	9860	7198	2491	10920	7972	3211	10500	7665	3345	9870	7205	3579	9450	6899	3713
	22.0	30	14367	9357	2796	11832	7721	2098	10935	7132	2491	12075	7895	3245	11655	7588	3378	10500	7358	3713	9765	7205	3914
	24.0	32	15353	9357	2838	12638	7721	2124	11652	7132	2519	12915	7895	3245	12390	7588	3412	10920	7512	3813	9975	7435	4047

	INDOOR		OUTDOOR TEMPERATURE (°CDB)																				
	EWB	EDB	-10			21			27			32			35			40			43		
	°C	°C	TC	SHC	PI	TC	SHC	PI	TC	SHC	PI	TC	SHC	PI	TC	SHC	PI	TC	SHC	PI	TC	SHC	PI
(1.2+1.2+1.8) + (1.8+1.8+5)	12.0	18	11691	8020	2671	8426	6805	2018	7798	6282	2379	8610	6975	3077	8295	6669	3211	7770	6285	3445	7455	5979	3579
	14.0	20	11691	8020	2671	9053	6805	2018	8426	6347	2407	9240	6975	3111	8925	6745	3245	8295	6285	3479	7980	6055	3646
	16.0	22	11691	8534	2713	9680	6805	2045	8963	6347	2435	9870	6975	3144	9555	6745	3312	8925	6285	3546	8610	6055	3680
	18.0	25	12536	9151	2754	10308	7394	2071	9501	6870	2463	10500	7588	3178	10080	7282	3312	9450	6822	3579	9030	6515	3713
	19.0	27	12959	9460	2796	10666	7787	2098	9860	7198	2491	10920	7972	3211	10500	7665	3345	9870	7205	3579	9450	6899	3713
	22.0	30	14367	9357	2796	11832	7721	2098	10935	7132	2491	12075	7895	3245	11655	7588	3378	10500	7358	3713	9765	7205	3914
	24.0	32	15353	9357	2838	12638	7721	2124	11652	7132	2519	12915	7895	3245	12390	7588	3412	10920	7512	3813	9975	7435	4047
(1.2+1.2+1.8) + (1.8+2.5+2.5)	12.0	18	11691	8020	2671	8426	6805	2018	7798	6282	2379	8610	6975	3077	8295	6669	3211	7770	6285	3445	7455	5979	3579
	14.0	20	11691	8020	2671	9053	6805	2018	8426	6347	2407	9240	6975	3111	8925	6745	3245	8295	6285	3479	7980	6055	3646
	16.0	22	11691	8534	2713	9680	6805	2045	8963	6347	2435	9870	6975	3144	9555	6745	3312	8925	6285	3546	8610	6055	3680
	18.0	25	12536	9151	2754	10308	7394	2071	9501	6870	2463	10500	7588	3178	10080	7282	3312	9450	6822	3579	9030	6515	3713
	19.0	27	12959	9460	2796	10666	7787	2098	9860	7198	2491	10920	7972	3211	10500	7665	3345	9870	7205	3579	9450	6899	3713
	22.0	30	14367	9357	2796	11832	7721	2098	10935	7132	2491	12075	7895	3245	11655	7588	3378	10500	7358	3713	9765	7205	3914
	24.0	32	15353	9357	2838	12638	7721	2124	11652	7132	2519	12915	7895	3245	12390	7588	3412	10920	7512	3813	9975	7435	4047
(1.2+1.2+1.8) + (1.8+2.5+3.5)	12.0	18	11691	8020	2671	8426	6805	2018	7798	6282	2379	8610	6975	3077	8295	6669	3211	7770	6285	3445	7455	5979	3579
	14.0	20	11691	8020	2671	9053	6805	2018	8426	6347	2407	9240	6975	3111	8925	6745	3245	8295	6285	3479	7980	6055	3646
	16.0	22	11691	8534	2713	9680	6805	2045	8963	6347	2435	9870	6975	3144	9555	6745	3312	8925	6285	3546	8610	6055	3680
	18.0	25	12536	9151	2754	10308	7394	2071	9501	6870	2463	10500	7588	3178	10080	7282	3312	9450	6822	3579	9030	6515	3713
	19.0	27	12959	9460	2796	10666	7787	2098	9860	7198	2491	10920	7972	3211	10500	7665	3345	9870	7205	3579	9450	6899	3713
	22.0	30	14367	9357	2796	11832	7721	2098	10935	7132	2491	12075	7895	3245	11655	7588	3378	10500	7358	3713	9765	7205	3914
	24.0	32	15353	9357	2838	12638	7721	2124	11652	7132	2519	12915	7895	3245	12390	7588	3412	10920	7512	3813	9975	7435	4047
(1.2+1.2+1.8) + (1.8+3.5+3.5)	12.0	18	11691	8020	2671	8426	6805	2018	7798	6282	2379	8610	6975	3077	8295	6669	3211	7770	6285	3445	7455	5979	3579
	14.0	20	11691	8020	2671	9053	6805	2018	8426	6347	2407	9240	6975	3111	8925	6745	3245	8295	6285	3479	7980	6055	3646
	16.0	22	11691	8534	2713	9680	6805	2045	8963	6347	2435	9870	6975	3144	9555	6745	3312	8925	6285	3546	8610	6055	3680
	18.0	25	12536	9151	2754	10308	7394	2071	9501	6870	2463	10500	7588	3178	10080	7282	3312	9450	6822	3579	9030	6515	3713
	19.0	27	12959	9460	2796	10666	7787	2098	9860	7198	2491	10920	7972	3211	10500	7665	3345	9870	7205	3579	9450	6899	3713
	22.0	30	14367	9357	2796	11832	7721	2098	10935	7132	2491	12075	7895	3245	11655	7588	3378	10500	7358	3713	9765	7205	3914
	24.0	32	15353	9357	2838	12638	7721	2124	11652	7132	2519	12915	7895	3245	12390	7588	3412	10920	7512	3813	9975	7435	4047
(1.2+1.2+1.8) + (2.5+2.5+2.5)	12.0	18	11691	8020	2671	8426	6805	2018	7798	6282	2379	8610	6975	3077	8295	6669	3211	7770	6285	3445	7455	5979	3579
	14.0	20	11691	8020	2671	9053	6805	2018	8426	6347	2407	9240	6975	3111	8925	6745	3245	8295	6285	3479	7980	6055	3646
	16.0	22	11691	8534	2713	9680	6805	2045	8963	6347	2435	9870	6975	3144	9555	6745	3312	8925	6285	3546	8610	6055	3680
	18.0	25	12536	9151	2754	10308	7394	2071	9501	6870	2463	10500	7588	3178	10080	7282	3312	9450	6822	3579	9030	6515	3713
	19.0	27	12959	9460	2796	10666	7787	2098	9860	7198	2491	10920	7972	3211	10500	7665	3345	9870	7205	3579	9450	6899	3713
	22.0	30	14367	9357	2796	11832	7721	2098	10935	7132	2491	12075	7895	3245	11655	7588	3378	10500	7358	3713	9765	7205	3914
	24.0	32	15353	9357	2838	12638	7721	2124	11652	7132	2519	12915	7895	3245	12390	7588	3412	10920	7512	3813	9975	7435	4047
(1.2+1.2+1.8) + (2.5+2.5+3.5)	12.0	18	11691	8020	2671	8426	6805	2018	7798	6282	2379	8610	6975	3077	8295	6669	3211	7770	6285	3445	7455	5979	3579
	14.0	20	11691	8020	2671	9053	6805	2018	8426	6347	2407	9240	6975	3111	8925	6745	3245	8295	6285	3479	7980	6055	3646
	16.0	22	11691	8534	2713	9680	6805	2045	8963	6347	2435	9870	6975	3144	9555	6745	3312	8925	6285	3546	8610	6055	3680
	18.0	25	12536	9151	2754	10308	7394	2071	9501	6870	2463	10500	7588	3178	10080	7282	3312	9450	6822	3579	9030	6515	3713
	19.0	27	12959	9460	2796	10666	7787	2098	9860	7198	2491	10920	7972	3211	10500	7665	3345	9870	7205	3579	9450	6899	3713
	22.0	30	14367	9357	2796	11832	7721	2098	10935	7132	2491	12075	7895	3245	11655	7588	3378	10500	7358	3713	9765	7205	3914
	24.0	32	15353	9357	2838	12638	7721	2124	11652	7132	2519	12915	7895	3245	12390	7588	3412	10920	7512	3813	9975	7435	4047
(1.2+1.2+2.5) + (1.2+1.2+1.2)	12.0	18	9464	6493	2020	6821	5509	1527	6313	5085	1799	6970	5647	2328	6715	5398	2429	6290	5088	2606	6035	4840	2707
	14.0	20	9464	6493	2020	7329	5509	1527	6821	5138	1820	7480	5647	2353	7225	5460	2454	6715	5088	2631	6460	4902	2758
	16.0	22	9464	6909	2052	7837	5509	1547	7256	5138	1841	7990	5647	2378	7735	5460	2505	7225	5088	2682	6970	4902	2783
	18.0	25	10148	7408	2083	8345	5986	1567	7691	5562	1863	8500	6143	2404	8160	5895	2505	7650	5522	2707	7310	5274	2808
	19.0	27	10490	7658	2115	8635	6303	1587	7982	5827	1884	8840	6453	2429	8500	6205	2530	7990	5833	2707	7650	5585	2808
	22.0	30	11630	7575	2115	9578	6250	1587	8852	5774	1884	9775	6391	2454	9435	6143	2555	8500	5957	2808	7905	5833	2960
	24.0	32	12429	7575	2146	10231	6250	1607	9433	5774	1905	10455	6391	2454	10030	6143	2581	8840	6081	2884	8075	6019	3061

	INDOOR		OUTDOOR TEMPERATURE (°CDB)																				
	EWB	EDB	-10			21			27			32			35			40			43		
	°C	°C	TC	SHC	PI	TC	SHC	PI	TC	SHC	PI	TC	SHC	PI	TC	SHC	PI	TC	SHC	PI	TC	SHC	PI
(1.2+1.2+2.5) + (1.2+1.2+1.8)	12.0	18	10132	6951	2156	7302	5898	1629	6758	5444	1920	7462	6045	2484	7189	5779	2592	6734	5447	2781	6461	5182	2889
	14.0	20	10132	6951	2156	7846	5898	1629	7302	5501	1943	8008	6045	2511	7735	5846	2619	7189	5447	2808	6916	5248	2943
	16.0	22	10132	7396	2189	8390	5898	1651	7768	5501	1965	8554	6045	2538	8281	5846	2673	7735	5447	2862	7462	5248	2970
	18.0	25	10865	7931	2223	8934	6408	1672	8234	5954	1988	9100	6577	2565	8736	6311	2673	8190	5912	2889	7826	5647	2997
	19.0	27	11231	8198	2257	9244	6748	1693	8545	6238	2010	9464	6909	2592	9100	6643	2700	8554	6244	2889	8190	5979	2997
	22.0	30	12451	8109	2257	10254	6692	1693	9477	6181	2010	10465	6842	2619	10101	6577	2727	9100	6377	2997	8463	6244	3159
	24.0	32	13306	8109	2291	10953	6692	1715	10099	6181	2033	11193	6842	2619	10738	6577	2754	9464	6510	3078	8645	6444	3267
(1.2+1.2+2.5) + (1.2+1.2+2.5)	12.0	18	10911	7486	2315	7864	6351	1750	7278	5863	2062	8036	6510	2668	7742	6224	2784	7252	5866	2987	6958	5580	3103
	14.0	20	10911	7486	2315	8450	6351	1750	7864	5924	2086	8624	6510	2697	8330	6296	2813	7742	5866	3016	7448	5652	3161
	16.0	22	10911	7965	2352	9035	6351	1773	8366	5924	2111	9212	6510	2726	8918	6296	2871	8330	5866	3074	8036	5652	3190
	18.0	25	11700	8541	2388	9621	6901	1796	8868	6412	2135	9800	7082	2755	9408	6796	2871	8820	6367	3103	8428	6081	3219
	19.0	27	12095	8829	2424	9955	7267	1819	9202	6718	2159	10192	7440	2784	9800	7154	2900	9212	6725	3103	8820	6439	3219
	22.0	30	13409	8733	2424	11043	7206	1819	10206	6657	2159	11270	7369	2813	10878	7082	2929	9800	6868	3219	9114	6725	3393
	24.0	32	14330	8733	2460	11796	7206	1842	10876	6657	2183	12054	7369	2813	11564	7082	2958	10192	7011	3306	9310	6939	3509
(1.2+1.2+2.5) + (1.2+1.2+3.5)	12.0	18	12025	8249	2375	8666	6999	1795	8021	6461	2116	8856	7174	2737	8532	6859	2856	7992	6465	3064	7668	6150	3183
	14.0	20	12025	8249	2375	9312	6999	1795	8666	6528	2140	9504	7174	2767	9180	6938	2886	8532	6465	3094	8208	6228	3243
	16.0	22	12025	8778	2412	9957	6999	1819	9220	6528	2165	10152	7174	2797	9828	6938	2945	9180	6465	3154	8856	6228	3273
	18.0	25	12894	9413	2450	10602	7605	1842	9773	7067	2190	10800	7805	2826	10368	7490	2945	9720	7017	3183	9288	6701	3302
	19.0	27	13329	9730	2487	10971	8009	1866	10141	7403	2215	11232	8199	2856	10800	7884	2975	10152	7411	3183	9720	7096	3302
	22.0	30	14778	9624	2487	12170	7942	1866	11248	7336	2215	12420	8121	2886	11988	7805	3005	10800	7569	3302	10044	7411	3481
	24.0	32	15792	9624	2524	13000	7942	1889	11985	7336	2240	13284	8121	2886	12744	7805	3035	11232	7726	3392	10260	7647	3600
(1.2+1.2+2.5) + (1.2+1.2+5)	12.0	18	12470	8555	2830	8987	7259	2139	8318	6700	2521	9184	7440	3261	8848	7113	3403	8288	6704	3651	7952	6377	3793
	14.0	20	12470	8555	2830	9657	7259	2139	8987	6770	2550	9856	7440	3297	9520	7195	3439	8848	6704	3687	8512	6459	3864
	16.0	22	12470	9103	2875	10326	7259	2167	9561	6770	2580	10528	7440	3332	10192	7195	3510	9520	6704	3758	9184	6459	3900
	18.0	25	13372	9761	2919	10995	7887	2195	10135	7328	2610	11200	8094	3368	10752	7767	3510	10080	7277	3793	9632	6950	3935
	19.0	27	13822	10090	2963	11378	8306	2223	10517	7677	2639	11648	8503	3403	11200	8176	3545	10528	7685	3793	10080	7358	3935
	22.0	30	15325	9981	2963	12620	8236	2223	11664	7608	2639	12880	8421	3439	12432	8094	3580	11200	7849	3935	10416	7685	4148
	24.0	32	16377	9981	3007	13481	8236	2252	12429	7608	2669	13776	8421	3439	13216	8094	3616	11648	8012	4041	10640	7931	4289
(1.2+1.2+2.5) + (1.2+1.8+1.8)	12.0	18	10800	7409	2292	7784	6287	1732	7204	5803	2041	7954	6444	2640	7663	6160	2755	7178	5806	2956	6887	5523	3071
	14.0	20	10800	7409	2292	8363	6287	1732	7784	5863	2065	8536	6444	2669	8245	6231	2784	7663	5806	2985	7372	5594	3128
	16.0	22	10800	7884	2327	8943	6287	1754	8280	5863	2089	9118	6444	2698	8827	6231	2841	8245	5806	3042	7954	5594	3157
	18.0	25	11581	8454	2363	9523	6831	1777	8777	6347	2113	9700	7010	2727	9312	6727	2841	8730	6302	3071	8342	6019	3186
	19.0	27	11971	8739	2399	9854	7193	1800	9109	6649	2137	10088	7364	2755	9700	7081	2870	9118	6656	3071	8730	6373	3186
	22.0	30	13272	8644	2399	10930	7133	1800	10102	6589	2137	11155	7293	2784	10767	7010	2899	9700	6798	3186	9021	6656	3358
	24.0	32	14183	8644	2435	11675	7133	1823	10765	6589	2161	11931	7293	2784	11446	7010	2927	10088	6939	3272	9215	6869	3473
(1.2+1.2+2.5) + (1.2+1.8+2.5)	12.0	18	11580	7944	2579	8345	6740	1949	7724	6222	2297	8528	6909	2972	8216	6605	3101	7696	6225	3327	7384	5922	3456
	14.0	20	11580	7944	2579	8967	6740	1949	8345	6287	2324	9152	6909	3004	8840	6681	3133	8216	6225	3359	7904	5998	3521
	16.0	22	11580	8453	2619	9588	6740	1975	8878	6287	2351	9776	6909	3036	9464	6681	3198	8840	6225	3424	8528	5998	3553
	18.0	25	12417	9064	2660	10210	7324	2000	9411	6805	2378	10400	7516	3069	9984	7212	3198	9360	6757	3456	8944	6453	3585
	19.0	27	12835	9370	2700	10565	7712	2026	9766	7129	2405	10816	7896	3101	10400	7592	3230	9776	7136	3456	9360	6833	3585
	22.0	30	14230	9268	2700	11719	7648	2026	10831	7064	2405	11960	7820	3133	11544	7516	3262	10400	7288	3585	9672	7136	3779
	24.0	32	15207	9268	2740	12518	7648	2051	11541	7064	2432	12792	7820	3133	12272	7516	3295	10816	7440	3682	9880	7364	3908
(1.2+1.2+2.5) + (1.2+1.8+3.5)	12.0	18	12470	8555	2771	8987	7259	2094	8318	6700	2468	9184	7440	3192	8848	7113	3331	8288	6704	3574	7952	6377	3713
	14.0	20	12470	8555	2771	9657	7259	2094	8987	6770	2497	9856	7440	3227	9520	7195	3366	8848	6704	3609	8512	6459	3782
	16.0	22	12470	9103	2814	10326	7259	2121	9561	6770	2526	10528	7440	3262	10192	7195	3435	9520	6704	3678	9184	6459	3817
	18.0	25	13372	9761	2857	10995	7887	2149	10135	7328	2555	11200	8094	3297	10752	7767	3435	10080	7277	3713	9632	6950	3852
	19.0	27	13822	10090	2900	11378	8306	2176	10517	7677	2584	11648	8503	3331	11200	8176	3470	10528	7685	3713	10080	7358	3852
	22.0	30	15325	9981	2900	12620	8236	2176	11664	7608	2584	12880	8421	3366	12432	8094	3505	11200	7849	3852	10416	7685	4060
	24.0	32	16377	9981	2944	13481	8236	2204	12429	7608	2613	13776	8421	3366	13216	8094	3539	11648	8012	3956	10640	7931	4199

	INDOOR		OUTDOOR TEMPERATURE (°CDB)																				
	EWB	EDB	-10			21			27			32			35			40			43		
	°C	°C	TC	SHC	PI	TC	SHC	PI	TC	SHC	PI	TC	SHC	PI	TC	SHC	PI	TC	SHC	PI	TC	SHC	PI
(1.2+1.2+2.5) + (1.2+1.8+5)	12.0	18	12470	8555	2830	8987	7259	2139	8318	6700	2521	9184	7440	3261	8848	7113	3403	8288	6704	3651	7952	6377	3793
	14.0	20	12470	8555	2830	9657	7259	2139	8987	6770	2550	9856	7440	3297	9520	7195	3439	8848	6704	3687	8512	6459	3864
	16.0	22	12470	9103	2875	10326	7259	2167	9561	6770	2580	10528	7440	3332	10192	7195	3510	9520	6704	3758	9184	6459	3900
	18.0	25	13372	9761	2919	10995	7887	2195	10135	7328	2610	11200	8094	3368	10752	7767	3510	10080	7277	3793	9632	6950	3935
	19.0	27	13822	10090	2963	11378	8306	2223	10517	7677	2639	11648	8503	3403	11200	8176	3545	10528	7685	3793	10080	7358	3935
	22.0	30	15325	9981	2963	12620	8236	2223	11664	7608	2639	12880	8421	3439	12432	8094	3580	11200	7849	3935	10416	7685	4148
	24.0	32	16377	9981	3007	13481	8236	2252	12429	7608	2669	13776	8421	3439	13216	8094	3616	11648	8012	4041	10640	7931	4289
(1.2+1.2+2.5) + (1.2+2.5+2.5)	12.0	18	12359	8479	2771	8907	7194	2094	8244	6641	2468	9102	7374	3192	8769	7050	3331	8214	6644	3574	7881	6320	3713
	14.0	20	12359	8479	2771	9570	7194	2094	8907	6710	2497	9768	7374	3227	9435	7131	3366	8769	6644	3609	8436	6401	3782
	16.0	22	12359	9022	2814	10234	7194	2121	9476	6710	2526	10434	7374	3262	10101	7131	3435	9435	6644	3678	9102	6401	3817
	18.0	25	13252	9674	2857	10897	7816	2149	10044	7263	2555	11100	8022	3297	10656	7698	3435	9990	7212	3713	9546	6888	3852
	19.0	27	13699	10000	2900	11276	8231	2176	10423	7609	2584	11544	8427	3331	11100	8103	3470	10434	7617	3713	9990	7293	3852
	22.0	30	15188	9892	2900	12508	8162	2176	11560	7540	2584	12765	8346	3366	12321	8022	3505	11100	7779	3852	10323	7617	4060
	24.0	32	16230	9892	2944	13361	8162	2204	12318	7540	2613	13653	8346	3366	13098	8022	3539	11544	7941	3956	10545	7860	4199
(1.2+1.2+2.5) + (1.2+2.5+3.5)	12.0	18	12470	8555	2830	8987	7259	2139	8318	6700	2521	9184	7440	3261	8848	7113	3403	8288	6704	3651	7952	6377	3793
	14.0	20	12470	8555	2830	9657	7259	2139	8987	6770	2550	9856	7440	3297	9520	7195	3439	8848	6704	3687	8512	6459	3864
	16.0	22	12470	9103	2875	10326	7259	2167	9561	6770	2580	10528	7440	3332	10192	7195	3510	9520	6704	3758	9184	6459	3900
	18.0	25	13372	9761	2919	10995	7887	2195	10135	7328	2610	11200	8094	3368	10752	7767	3510	10080	7277	3793	9632	6950	3935
	19.0	27	13822	10090	2963	11378	8306	2223	10517	7677	2639	11648	8503	3403	11200	8176	3545	10528	7685	3793	10080	7358	3935
	22.0	30	15325	9981	2963	12620	8236	2223	11664	7608	2639	12880	8421	3439	12432	8094	3580	11200	7849	3935	10416	7685	4148
	24.0	32	16377	9981	3007	13481	8236	2252	12429	7608	2669	13776	8421	3439	13216	8094	3616	11648	8012	4041	10640	7931	4289
(1.2+1.2+2.5) + (1.2+3.5+3.5)	12.0	18	12470	8555	2830	8987	7259	2139	8318	6700	2521	9184	7440	3261	8848	7113	3403	8288	6704	3651	7952	6377	3793
	14.0	20	12470	8555	2830	9657	7259	2139	8987	6770	2550	9856	7440	3297	9520	7195	3439	8848	6704	3687	8512	6459	3864
	16.0	22	12470	9103	2875	10326	7259	2167	9561	6770	2580	10528	7440	3332	10192	7195	3510	9520	6704	3758	9184	6459	3900
	18.0	25	13372	9761	2919	10995	7887	2195	10135	7328	2610	11200	8094	3368	10752	7767	3510	10080	7277	3793	9632	6950	3935
	19.0	27	13822	10090	2963	11378	8306	2223	10517	7677	2639	11648	8503	3403	11200	8176	3545	10528	7685	3793	10080	7358	3935
	22.0	30	15325	9981	2963	12620	8236	2223	11664	7608	2639	12880	8421	3439	12432	8094	3580	11200	7849	3935	10416	7685	4148
	24.0	32	16377	9981	3007	13481	8236	2252	12429	7608	2669	13776	8421	3439	13216	8094	3616	11648	8012	4041	10640	7931	4289
(1.2+1.2+2.5) + (1.8+1.8+1.8)	12.0	18	11468	7867	2579	8265	6675	1949	7650	6162	2297	8446	6842	2972	8137	6542	3101	7622	6166	3327	7313	5865	3456
	14.0	20	11468	7867	2579	8881	6675	1949	8265	6226	2324	9064	6842	3004	8755	6617	3133	8137	6166	3359	7828	5940	3521
	16.0	22	11468	8372	2619	9496	6675	1975	8793	6226	2351	9682	6842	3036	9373	6617	3198	8755	6166	3424	8446	5940	3553
	18.0	25	12297	8977	2660	10112	7253	2000	9320	6740	2378	10300	7444	3069	9888	7143	3198	9270	6692	3456	8858	6391	3585
	19.0	27	12712	9280	2700	10463	7638	2026	9672	7061	2405	10712	7820	3101	10300	7519	3230	9682	7068	3456	9270	6767	3585
	22.0	30	14093	9179	2700	11606	7574	2026	10727	6996	2405	11845	7745	3133	11433	7444	3262	10300	7218	3585	9579	7068	3779
	24.0	32	15061	9179	2740	12398	7574	2051	11430	6996	2432	12669	7745	3133	12154	7444	3295	10712	7369	3682	9785	7293	3908
(1.2+1.2+2.5) + (1.8+1.8+2.5)	12.0	18	12248	8402	2771	8827	7129	2094	8170	6581	2468	9020	7307	3192	8690	6986	3331	8140	6585	3574	7810	6263	3713
	14.0	20	12248	8402	2771	9484	7129	2094	8827	6649	2497	9680	7307	3227	9350	7066	3366	8690	6585	3609	8360	6344	3782
	16.0	22	12248	8941	2814	10141	7129	2121	9390	6649	2526	10340	7307	3262	10010	7066	3435	9350	6585	3678	9020	6344	3817
	18.0	25	13133	9587	2857	10799	7746	2149	9954	7198	2555	11000	7950	3297	10560	7629	3435	9900	7147	3713	9460	6826	3852
	19.0	27	13576	9910	2900	11174	8157	2176	10329	7540	2584	11440	8351	3331	11000	8030	3470	10340	7548	3713	9900	7227	3852
	22.0	30	15051	9802	2900	12395	8089	2176	11456	7472	2584	12650	8271	3366	12210	7950	3505	11000	7709	3852	10230	7548	4060
	24.0	32	16084	9802	2944	13240	8089	2204	12207	7472	2613	13530	8271	3366	12980	7950	3539	11440	7869	3956	10450	7789	4199
(1.2+1.2+2.5) + (1.8+1.8+3.5)	12.0	18	12470	8555	2830	8987	7259	2139	8318	6700	2521	9184	7440	3261	8848	7113	3403	8288	6704	3651	7952	6377	3793
	14.0	20	12470	8555	2830	9657	7259	2139	8987	6770	2550	9856	7440	3297	9520	7195	3439	8848	6704	3687	8512	6459	3864
	16.0	22	12470	9103	2875	10326	7259	2167	9561	6770	2580	10528	7440	3332	10192	7195	3510	9520	6704	3758	9184	6459	3900
	18.0	25	13372	9761	2919	10995	7887	2195	10135	7328	2610	11200	8094	3368	10752	7767	3510	10080	7277	3793	9632	6950	3935
	19.0	27	13822	10090	2963	11378	8306	2223	10517	7677	2639	11648	8503	3403	11200	8176	3545	10528	7685	3793	10080	7358	3935
	22.0	30	15325	9981	2963	12620	8236	2223	11664	7608	2639	12880	8421	3439	12432	8094	3580	11200	7849	3935	10416	7685	4148
	24.0	32	16377	9981	3007	13481	8236	2252	12429	7608	2669	13776	8421	3439	13216	8094	3616	11648	8012	4041	10640	7931	4289

	INDOOR		OUTDOOR TEMPERATURE (°CDB)																				
	EWB	EDB	-10			21			27			32			35			40			43		
	°C	°C	TC	SHC	PI	TC	SHC	PI	TC	SHC	PI	TC	SHC	PI	TC	SHC	PI	TC	SHC	PI	TC	SHC	PI
(1.2+1.2+2.5) + (1.8+1.8+5)	12.0	18	12470	8555	2830	8987	7259	2139	8318	6700	2521	9184	7440	3261	8848	7113	3403	8288	6704	3651	7952	6377	3793
	14.0	20	12470	8555	2830	9657	7259	2139	8987	6770	2550	9856	7440	3297	9520	7195	3439	8848	6704	3687	8512	6459	3864
	16.0	22	12470	9103	2875	10326	7259	2167	9561	6770	2580	10528	7440	3332	10192	7195	3510	9520	6704	3758	9184	6459	3900
	18.0	25	13372	9761	2919	10995	7887	2195	10135	7328	2610	11200	8094	3368	10752	7767	3510	10080	7277	3793	9632	6950	3935
	19.0	27	13822	10090	2963	11378	8306	2223	10517	7677	2639	11648	8503	3403	11200	8176	3545	10528	7685	3793	10080	7358	3935
	22.0	30	15325	9981	2963	12620	8236	2223	11664	7608	2639	12880	8421	3439	12432	8094	3580	11200	7849	3935	10416	7685	4148
	24.0	32	16377	9981	3007	13481	8236	2252	12429	7608	2669	13776	8421	3439	13216	8094	3616	11648	8012	4041	10640	7931	4289
(1.2+1.2+2.5) + (1.8+2.5+2.5)	12.0	18	12470	8555	2830	8987	7259	2139	8318	6700	2521	9184	7440	3261	8848	7113	3403	8288	6704	3651	7952	6377	3793
	14.0	20	12470	8555	2830	9657	7259	2139	8987	6770	2550	9856	7440	3297	9520	7195	3439	8848	6704	3687	8512	6459	3864
	16.0	22	12470	9103	2875	10326	7259	2167	9561	6770	2580	10528	7440	3332	10192	7195	3510	9520	6704	3758	9184	6459	3900
	18.0	25	13372	9761	2919	10995	7887	2195	10135	7328	2610	11200	8094	3368	10752	7767	3510	10080	7277	3793	9632	6950	3935
	19.0	27	13822	10090	2963	11378	8306	2223	10517	7677	2639	11648	8503	3403	11200	8176	3545	10528	7685	3793	10080	7358	3935
	22.0	30	15325	9981	2963	12620	8236	2223	11664	7608	2639	12880	8421	3439	12432	8094	3580	11200	7849	3935	10416	7685	4148
	24.0	32	16377	9981	3007	13481	8236	2252	12429	7608	2669	13776	8421	3439	13216	8094	3616	11648	8012	4041	10640	7931	4289
(1.2+1.2+2.5) + (1.8+2.5+3.5)	12.0	18	12470	8555	2830	8987	7259	2139	8318	6700	2521	9184	7440	3261	8848	7113	3403	8288	6704	3651	7952	6377	3793
	14.0	20	12470	8555	2830	9657	7259	2139	8987	6770	2550	9856	7440	3297	9520	7195	3439	8848	6704	3687	8512	6459	3864
	16.0	22	12470	9103	2875	10326	7259	2167	9561	6770	2580	10528	7440	3332	10192	7195	3510	9520	6704	3758	9184	6459	3900
	18.0	25	13372	9761	2919	10995	7887	2195	10135	7328	2610	11200	8094	3368	10752	7767	3510	10080	7277	3793	9632	6950	3935
	19.0	27	13822	10090	2963	11378	8306	2223	10517	7677	2639	11648	8503	3403	11200	8176	3545	10528	7685	3793	10080	7358	3935
	22.0	30	15325	9981	2963	12620	8236	2223	11664	7608	2639	12880	8421	3439	12432	8094	3580	11200	7849	3935	10416	7685	4148
	24.0	32	16377	9981	3007	13481	8236	2252	12429	7608	2669	13776	8421	3439	13216	8094	3616	11648	8012	4041	10640	7931	4289
(1.2+1.2+2.5) + (1.8+3.5+3.5)	12.0	18	12470	8555	2830	8987	7259	2139	8318	6700	2521	9184	7440	3261	8848	7113	3403	8288	6704	3651	7952	6377	3793
	14.0	20	12470	8555	2830	9657	7259	2139	8987	6770	2550	9856	7440	3297	9520	7195	3439	8848	6704	3687	8512	6459	3864
	16.0	22	12470	9103	2875	10326	7259	2167	9561	6770	2580	10528	7440	3332	10192	7195	3510	9520	6704	3758	9184	6459	3900
	18.0	25	13372	9761	2919	10995	7887	2195	10135	7328	2610	11200	8094	3368	10752	7767	3510	10080	7277	3793	9632	6950	3935
	19.0	27	13822	10090	2963	11378	8306	2223	10517	7677	2639	11648	8503	3403	11200	8176	3545	10528	7685	3793	10080	7358	3935
	22.0	30	15325	9981	2963	12620	8236	2223	11664	7608	2639	12880	8421	3439	12432	8094	3580	11200	7849	3935	10416	7685	4148
	24.0	32	16377	9981	3007	13481	8236	2252	12429	7608	2669	13776	8421	3439	13216	8094	3616	11648	8012	4041	10640	7931	4289
(1.2+1.2+2.5) + (2.5+2.5+2.5)	12.0	18	12470	8555	2830	8987	7259	2139	8318	6700	2521	9184	7440	3261	8848	7113	3403	8288	6704	3651	7952	6377	3793
	14.0	20	12470	8555	2830	9657	7259	2139	8987	6770	2550	9856	7440	3297	9520	7195	3439	8848	6704	3687	8512	6459	3864
	16.0	22	12470	9103	2875	10326	7259	2167	9561	6770	2580	10528	7440	3332	10192	7195	3510	9520	6704	3758	9184	6459	3900
	18.0	25	13372	9761	2919	10995	7887	2195	10135	7328	2610	11200	8094	3368	10752	7767	3510	10080	7277	3793	9632	6950	3935
	19.0	27	13822	10090	2963	11378	8306	2223	10517	7677	2639	11648	8503	3403	11200	8176	3545	10528	7685	3793	10080	7358	3935
	22.0	30	15325	9981	2963	12620	8236	2223	11664	7608	2639	12880	8421	3439	12432	8094	3580	11200	7849	3935	10416	7685	4148
	24.0	32	16377	9981	3007	13481	8236	2252	12429	7608	2669	13776	8421	3439	13216	8094	3616	11648	8012	4041	10640	7931	4289
(1.2+1.2+2.5) + (2.5+2.5+3.5)	12.0	18	12470	8555	2830	8987	7259	2139	8318	6700	2521	9184	7440	3261	8848	7113	3403	8288	6704	3651	7952	6377	3793
	14.0	20	12470	8555	2830	9657	7259	2139	8987	6770	2550	9856	7440	3297	9520	7195	3439	8848	6704	3687	8512	6459	3864
	16.0	22	12470	9103	2875	10326	7259	2167	9561	6770	2580	10528	7440	3332	10192	7195	3510	9520	6704	3758	9184	6459	3900
	18.0	25	13372	9761	2919	10995	7887	2195	10135	7328	2610	11200	8094	3368	10752	7767	3510	10080	7277	3793	9632	6950	3935
	19.0	27	13822	10090	2963	11378	8306	2223	10517	7677	2639	11648	8503	3403	11200	8176	3545	10528	7685	3793	10080	7358	3935
	22.0	30	15325	9981	2963	12620	8236	2223	11664	7608	2639	12880	8421	3439	12432	8094	3580	11200	7849	3935	10416	7685	4148
	24.0	32	16377	9981	3007	13481	8236	2252	12429	7608	2669	13776	8421	3439	13216	8094	3616	11648	8012	4041	10640	7931	4289
(1.2+1.2+3.5) + (1.2+1.2+1.2)	12.0	18	10577	7256	2080	7623	6157	1572	7055	5683	1852	7790	6311	2397	7505	6033	2501	7030	5687	2683	6745	5409	2787
	14.0	20	10577	7256	2080	8191	6157	1572	7623	5743	1874	8360	6311	2423	8075	6103	2527	7505	5687	2709	7220	5479	2839
	16.0	22	10577	7722	2112	8759	6157	1592	8110	5743	1896	8930	6311	2449	8645	6103	2579	8075	5687	2761	7790	5479	2866
	18.0	25	11342	8280	2145	9326	6690	1613	8596	6216	1918	9500	6866	2475	9120	6588	2579	8550	6172	2787	8170	5895	2892
	19.0	27	11724	8559	2177	9651	7045	1634	8921	6512	1940	9880	7212	2501	9500	6935	2605	8930	6519	2787	8550	6242	2892
	22.0	30	12999	8466	2177	10705	6986	1634	9894	6453	1940	10925	7143	2527	10545	6866	2631	9500	6658	2892	8835	6519	3048
	24.0	32	13891	8466	2210	11435	6986	1654	10543	6453	1961	11685	7143	2527	11210	6866	2657	9880	6796	2970	9025	6727	3152

	INDOOR		OUTDOOR TEMPERATURE (°CDB)																				
	EWB	EDB	-10			21			27			32			35			40			43		
	°C	°C	TC	SHC	PI	TC	SHC	PI	TC	SHC	PI	TC	SHC	PI	TC	SHC	PI	TC	SHC	PI	TC	SHC	PI
(1.2+1.2+3.5) + (1.2+1.2+1.8)	12.0	18	11245	7715	2216	8105	6546	1674	7501	6042	1973	8282	6709	2553	7979	6415	2664	7474	6046	2858	7171	5751	2969
	14.0	20	11245	7715	2216	8708	6546	1674	8105	6105	1997	8888	6709	2581	8585	6488	2692	7979	6046	2886	7676	5825	3025
	16.0	22	11245	8209	2250	9312	6546	1696	8622	6105	2020	9494	6709	2609	9191	6488	2747	8585	6046	2942	8282	5825	3053
	18.0	25	12058	8803	2285	9915	7112	1718	9139	6609	2043	10100	7299	2636	9696	7004	2747	9090	6562	2969	8686	6267	3080
	19.0	27	12465	9099	2320	10260	7490	1740	9484	6923	2066	10504	7668	2664	10100	7373	2775	9494	6931	2969	9090	6636	3080
	22.0	30	13820	9000	2320	11381	7427	1740	10519	6860	2066	11615	7594	2692	11211	7299	2803	10100	7078	3080	9393	6931	3247
	24.0	32	14768	9000	2354	12157	7427	1762	11209	6860	2089	12423	7594	2692	11918	7299	2831	10504	7226	3164	9595	7152	3358
(1.2+1.2+3.5) + (1.2+1.2+2.5)	12.0	18	12025	8249	2375	8666	6999	1795	8021	6461	2116	8856	7174	2737	8532	6859	2856	7992	6465	3064	7668	6150	3183
	14.0	20	12025	8249	2375	9312	6999	1795	8666	6528	2140	9504	7174	2767	9180	6938	2886	8532	6465	3094	8208	6228	3243
	16.0	22	12025	8778	2412	9957	6999	1819	9220	6528	2165	10152	7174	2797	9828	6938	2945	9180	6465	3154	8856	6228	3273
	18.0	25	12894	9413	2450	10602	7605	1842	9773	7067	2190	10800	7805	2826	10368	7490	2945	9720	7017	3183	9288	6701	3302
	19.0	27	13329	9730	2487	10971	8009	1866	10141	7403	2215	11232	8199	2856	10800	7884	2975	10152	7411	3183	9720	7096	3302
	22.0	30	14778	9624	2487	12170	7942	1866	11248	7336	2215	12420	8121	2886	11988	7805	3005	10800	7569	3302	10044	7411	3481
	24.0	32	15792	9624	2524	13000	7942	1889	11985	7336	2240	13284	8121	2886	12744	7805	3035	11232	7726	3392	10260	7647	3600
(1.2+1.2+3.5) + (1.2+1.2+3.5)	12.0	18	13138	9013	2435	9469	7648	1840	8764	7059	2169	9676	7839	2806	9322	7494	2928	8732	7063	3142	8378	6719	3264
	14.0	20	13138	9013	2435	10174	7648	1840	9469	7133	2194	10384	7839	2837	10030	7580	2959	9322	7063	3172	8968	6805	3325
	16.0	22	13138	9591	2473	10879	7648	1864	10073	7133	2220	11092	7839	2867	10738	7580	3020	10030	7063	3233	9676	6805	3355
	18.0	25	14088	10284	2511	11584	8309	1889	10678	7721	2245	11800	8528	2898	11328	8183	3020	10620	7666	3264	10148	7322	3386
	19.0	27	14563	10631	2549	11987	8751	1913	11080	8089	2271	12272	8959	2928	11800	8614	3050	11092	8097	3264	10620	7753	3386
	22.0	30	16146	10515	2549	13297	8677	1913	12289	8015	2271	13570	8872	2959	13098	8528	3081	11800	8269	3386	10974	8097	3569
	24.0	32	17254	10515	2587	14203	8677	1937	13095	8015	2296	14514	8872	2959	13924	8528	3111	12272	8442	3477	11210	8356	3691
(1.2+1.2+3.5) + (1.2+1.2+5)	12.0	18	13584	9319	2890	9790	7907	2184	9061	7299	2574	10004	8104	3330	9638	7748	3475	9028	7303	3729	8662	6947	3873
	14.0	20	13584	9319	2890	10519	7907	2184	9790	7375	2604	10736	8104	3367	10370	7837	3511	9638	7303	3765	9272	7036	3946
	16.0	22	13584	9916	2936	11248	7907	2213	10415	7375	2635	11468	8104	3403	11102	7837	3584	10370	7303	3837	10004	7036	3982
	18.0	25	14566	10633	2981	11977	8591	2242	11040	7983	2665	12200	8817	3439	11712	8461	3584	10980	7926	3873	10492	7570	4018
	19.0	27	15057	10991	3026	12393	9047	2270	11456	8363	2695	12688	9262	3475	12200	8906	3620	11468	8372	3873	10980	8015	4018
	22.0	30	16693	10872	3026	13747	8971	2270	12706	8287	2695	14030	9173	3511	13542	8817	3656	12200	8550	4018	11346	8372	4235
	24.0	32	17839	10872	3071	14685	8971	2299	13539	8287	2726	15006	9173	3511	14396	8817	3692	12688	8728	4127	11590	8639	4380
(1.2+1.2+3.5) + (1.2+1.8+1.8)	12.0	18	11914	8173	2351	8586	6935	1777	7947	6401	2094	8774	7108	2709	8453	6796	2827	7918	6405	3033	7597	6093	3151
	14.0	20	11914	8173	2351	9225	6935	1777	8586	6468	2119	9416	7108	2739	9095	6874	2857	8453	6405	3063	8132	6171	3210
	16.0	22	11914	8697	2388	9865	6935	1800	9134	6468	2143	10058	7108	2768	9737	6874	2916	9095	6405	3122	8774	6171	3240
	18.0	25	12775	9326	2425	10504	7535	1824	9682	7001	2168	10700	7733	2798	10272	7420	2916	9630	6952	3151	9202	6639	3269
	19.0	27	13205	9640	2462	10870	7935	1847	10048	7335	2193	11128	8123	2827	10700	7811	2945	10058	7342	3151	9630	7030	3269
	22.0	30	14641	9535	2462	12057	7868	1847	11144	7268	2193	12305	8045	2857	11877	7733	2974	10700	7499	3269	9951	7342	3446
	24.0	32	15645	9535	2498	12879	7868	1870	11874	7268	2217	13161	8045	2857	12626	7733	3004	11128	7655	3357	10165	7577	3563
(1.2+1.2+3.5) + (1.2+1.8+2.5)	12.0	18	12693	8708	2639	9148	7388	1994	8467	6820	2350	9348	7573	3041	9006	7240	3173	8436	6824	3404	8094	6491	3536
	14.0	20	12693	8708	2639	9829	7388	1994	9148	6891	2378	10032	7573	3074	9690	7323	3206	9006	6824	3437	8664	6574	3602
	16.0	22	12693	9266	2680	10510	7388	2020	9732	6891	2405	10716	7573	3107	10374	7323	3272	9690	6824	3503	9348	6574	3636
	18.0	25	13610	9936	2721	11191	8028	2047	10316	7459	2433	11400	8239	3140	10944	7906	3272	10260	7407	3536	9804	7074	3669
	19.0	27	14069	10271	2763	11581	8454	2073	10705	7815	2461	11856	8655	3173	11400	8322	3305	10716	7823	3536	10260	7490	3669
	22.0	30	15599	10159	2763	12846	8383	2073	11873	7744	2461	13110	8572	3206	12654	8239	3338	11400	7989	3669	10602	7823	3867
	24.0	32	16669	10159	2804	13722	8383	2099	12651	7744	2488	14022	8572	3206	13452	8239	3371	11856	8156	3768	10830	8072	3999
(1.2+1.2+3.5) + (1.2+1.8+3.5)	12.0	18	13584	9319	2830	9790	7907	2139	9061	7299	2521	10004	8104	3261	9638	7748	3403	9028	7303	3651	8662	6947	3793
	14.0	20	13584	9319	2830	10519	7907	2139	9790	7375	2550	10736	8104	3297	10370	7837	3439	9638	7303	3687	9272	7036	3864
	16.0	22	13584	9916	2875	11248	7907	2167	10415	7375	2580	11468	8104	3332	11102	7837	3510	10370	7303	3758	10004	7036	3900
	18.0	25	14566	10633	2919	11977	8591	2195	11040	7983	2610	12200	8817	3368	11712	8461	3510	10980	7926	3793	10492	7570	3935
	19.0	27	15057	10991	2963	12393	9047	2223	11456	8363	2639	12688	9262	3403	12200	8906	3545	11468	8372	3793	10980	8015	3935
	22.0	30	16693	10872	2963	13747	8971	2223	12706	8287	2639	14030	9173	3439	13542	8817	3580	12200	8550	3935	11346	8372	4148
	24.0	32	17839	10872	3007	14685	8971	2252	13539	8287	2669	15006	9173	3439	14396	8817	3616	12688	8728	4041	11590	8639	4289

	INDOOR		OUTDOOR TEMPERATURE (°CDB)																				
	EWB	EDB	-10			21			27			32			35			40			43		
	°C	°C	TC	SHC	PI	TC	SHC	PI	TC	SHC	PI	TC	SHC	PI	TC	SHC	PI	TC	SHC	PI	TC	SHC	PI
(1.2+1.2+3.5) + (1.2+1.8+5)	12.0	18	13584	9319	2890	9790	7907	2184	9061	7299	2574	10004	8104	3330	9638	7748	3475	9028	7303	3729	8662	6947	3873
	14.0	20	13584	9319	2890	10519	7907	2184	9790	7375	2604	10736	8104	3367	10370	7837	3511	9638	7303	3765	9272	7036	3946
	16.0	22	13584	9916	2936	11248	7907	2213	10415	7375	2635	11468	8104	3403	11102	7837	3584	10370	7303	3837	10004	7036	3982
	18.0	25	14566	10633	2981	11977	8591	2242	11040	7983	2665	12200	8817	3439	11712	8461	3584	10980	7926	3873	10492	7570	4018
	19.0	27	15057	10991	3026	12393	9047	2270	11456	8363	2695	12688	9262	3475	12200	8906	3620	11468	8372	3873	10980	8015	4018
	22.0	30	16693	10872	3026	13747	8971	2270	12706	8287	2695	14030	9173	3511	13542	8817	3656	12200	8550	4018	11346	8372	4235
	24.0	32	17839	10872	3071	14685	8971	2299	13539	8287	2726	15006	9173	3511	14396	8817	3692	12688	8728	4127	11590	8639	4380
(1.2+1.2+3.5) + (1.2+2.5+2.5)	12.0	18	13472	9242	2830	9710	7842	2139	8986	7239	2521	9922	8038	3261	9559	7685	3403	8954	7243	3651	8591	6890	3793
	14.0	20	13472	9242	2830	10433	7842	2139	9710	7314	2550	10648	8038	3297	10285	7773	3439	9559	7243	3687	9196	6978	3864
	16.0	22	13472	9835	2875	11156	7842	2167	10329	7314	2580	11374	8038	3332	11011	7773	3510	10285	7243	3758	9922	6978	3900
	18.0	25	14446	10546	2919	11879	8521	2195	10949	7917	2610	12100	8745	3368	11616	8391	3510	10890	7861	3793	10406	7508	3935
	19.0	27	14933	10901	2963	12292	8973	2223	11362	8294	2639	12584	9186	3403	12100	8833	3545	11374	8303	3793	10890	7950	3935
	22.0	30	16556	10783	2963	13635	8898	2223	12602	8219	2639	13915	9098	3439	13431	8745	3580	12100	8480	3935	11253	8303	4148
	24.0	32	17693	10783	3007	14564	8898	2252	13428	8219	2669	14883	9098	3439	14278	8745	3616	12584	8656	4041	11495	8568	4289
(1.2+1.2+3.5) + (1.2+2.5+3.5)	12.0	18	13584	9319	2890	9790	7907	2184	9061	7299	2574	10004	8104	3330	9638	7748	3475	9028	7303	3729	8662	6947	3873
	14.0	20	13584	9319	2890	10519	7907	2184	9790	7375	2604	10736	8104	3367	10370	7837	3511	9638	7303	3765	9272	7036	3946
	16.0	22	13584	9916	2936	11248	7907	2213	10415	7375	2635	11468	8104	3403	11102	7837	3584	10370	7303	3837	10004	7036	3982
	18.0	25	14566	10633	2981	11977	8591	2242	11040	7983	2665	12200	8817	3439	11712	8461	3584	10980	7926	3873	10492	7570	4018
	19.0	27	15057	10991	3026	12393	9047	2270	11456	8363	2695	12688	9262	3475	12200	8906	3620	11468	8372	3873	10980	8015	4018
	22.0	30	16693	10872	3026	13747	8971	2270	12706	8287	2695	14030	9173	3511	13542	8817	3656	12200	8550	4018	11346	8372	4235
	24.0	32	17839	10872	3071	14685	8971	2299	13539	8287	2726	15006	9173	3511	14396	8817	3692	12688	8728	4127	11590	8639	4380
(1.2+1.2+3.5) + (1.2+3.5+3.5)	12.0	18	13584	9319	2890	9790	7907	2184	9061	7299	2574	10004	8104	3330	9638	7748	3475	9028	7303	3729	8662	6947	3873
	14.0	20	13584	9319	2890	10519	7907	2184	9790	7375	2604	10736	8104	3367	10370	7837	3511	9638	7303	3765	9272	7036	3946
	16.0	22	13584	9916	2936	11248	7907	2213	10415	7375	2635	11468	8104	3403	11102	7837	3584	10370	7303	3837	10004	7036	3982
	18.0	25	14566	10633	2981	11977	8591	2242	11040	7983	2665	12200	8817	3439	11712	8461	3584	10980	7926	3873	10492	7570	4018
	19.0	27	15057	10991	3026	12393	9047	2270	11456	8363	2695	12688	9262	3475	12200	8906	3620	11468	8372	3873	10980	8015	4018
	22.0	30	16693	10872	3026	13747	8971	2270	12706	8287	2695	14030	9173	3511	13542	8817	3656	12200	8550	4018	11346	8372	4235
	24.0	32	17839	10872	3071	14685	8971	2299	13539	8287	2726	15006	9173	3511	14396	8817	3692	12688	8728	4127	11590	8639	4380
(1.2+1.2+3.5) + (1.8+1.8+1.8)	12.0	18	12582	8631	2639	9068	7324	1994	8392	6760	2350	9266	7507	3041	8927	7177	3173	8362	6764	3404	8023	6434	3536
	14.0	20	12582	8631	2639	9743	7324	1994	9068	6831	2378	9944	7507	3074	9605	7259	3206	8927	6764	3437	8588	6517	3602
	16.0	22	12582	9185	2680	10418	7324	2020	9646	6831	2405	10622	7507	3107	10283	7259	3272	9605	6764	3503	9266	6517	3636
	18.0	25	13491	9849	2721	11093	7957	2047	10225	7394	2433	11300	8167	3140	10848	7837	3272	10170	7342	3536	9718	7012	3669
	19.0	27	13946	10180	2763	11479	8380	2073	10611	7746	2461	11752	8579	3173	11300	8249	3305	10622	7754	3536	10170	7424	3669
	22.0	30	15462	10070	2763	12733	8309	2073	11769	7676	2461	12995	8496	3206	12543	8167	3338	11300	7919	3669	10509	7754	3867
	24.0	32	16523	10070	2804	13601	8309	2099	12540	7676	2488	13899	8496	3206	13334	8167	3371	11752	8084	3768	10735	8002	3999
(1.2+1.2+3.5) + (1.8+1.8+2.5)	12.0	18	13361	9166	2830	9629	7777	2139	8912	7179	2521	9840	7972	3261	9480	7621	3403	8880	7183	3651	8520	6833	3793
	14.0	20	13361	9166	2830	10346	7777	2139	9629	7254	2550	10560	7972	3297	10200	7709	3439	9480	7183	3687	9120	6920	3864
	16.0	22	13361	9754	2875	11063	7777	2167	10244	7254	2580	11280	7972	3332	10920	7709	3510	10200	7183	3758	9840	6920	3900
	18.0	25	14327	10459	2919	11780	8450	2195	10859	7852	2610	12000	8672	3368	11520	8322	3510	10800	7796	3793	10320	7446	3935
	19.0	27	14810	10811	2963	12190	8899	2223	11268	8226	2639	12480	9110	3403	12000	8760	3545	11280	8234	3793	10800	7884	3935
	22.0	30	16420	10694	2963	13522	8824	2223	12498	8151	2639	13800	9023	3439	13320	8672	3580	12000	8410	3935	11160	8234	4148
	24.0	32	17546	10694	3007	14444	8824	2252	13317	8151	2669	14760	9023	3439	14160	8672	3616	12480	8585	4041	11400	8497	4289
(1.2+1.2+3.5) + (1.8+1.8+3.5)	12.0	18	13584	9319	2890	9790	7907	2184	9061	7299	2574	10004	8104	3330	9638	7748	3475	9028	7303	3729	8662	6947	3873
	14.0	20	13584	9319	2890	10519	7907	2184	9790	7375	2604	10736	8104	3367	10370	7837	3511	9638	7303	3765	9272	7036	3946
	16.0	22	13584	9916	2936	11248	7907	2213	10415	7375	2635	11468	8104	3403	11102	7837	3584	10370	7303	3837	10004	7036	3982
	18.0	25	14566	10633	2981	11977	8591	2242	11040	7983	2665	12200	8817	3439	11712	8461	3584	10980	7926	3873	10492	7570	4018
	19.0	27	15057	10991	3026	12393	9047	2270	11456	8363	2695	12688	9262	3475	12200	8906	3620	11468	8372	3873	10980	8015	4018
	22.0	30	16693	10872	3026	13747	8971	2270	12706	8287	2695	14030	9173	3511	13542	8817	3656	12200	8550	4018	11346	8372	4235
	24.0	32	17839	10872	3071	14685	8971	2299	13539	8287	2726	15006	9173	3511	14396	8817	3692	12688	8728	4127	11590	8639	4380

	INDOOR		OUTDOOR TEMPERATURE (°CDB)																				
	EWB	EDB	-10			21			27			32			35			40			43		
	°C	°C	TC	SHC	PI	TC	SHC	PI	TC	SHC	PI	TC	SHC	PI	TC	SHC	PI	TC	SHC	PI	TC	SHC	PI
(1.2+1.2+3.5) + (1.8+1.8+5)	12.0	18	13584	9319	2890	9790	7907	2184	9061	7299	2574	10004	8104	3330	9638	7748	3475	9028	7303	3729	8662	6947	3873
	14.0	20	13584	9319	2890	10519	7907	2184	9790	7375	2604	10736	8104	3367	10370	7837	3511	9638	7303	3765	9272	7036	3946
	16.0	22	13584	9916	2936	11248	7907	2213	10415	7375	2635	11468	8104	3403	11102	7837	3584	10370	7303	3837	10004	7036	3982
	18.0	25	14566	10633	2981	11977	8591	2242	11040	7983	2665	12200	8817	3439	11712	8461	3584	10980	7926	3873	10492	7570	4018
	19.0	27	15057	10991	3026	12393	9047	2270	11456	8363	2695	12688	9262	3475	12200	8906	3620	11468	8372	3873	10980	8015	4018
	22.0	30	16693	10872	3026	13747	8971	2270	12706	8287	2695	14030	9173	3511	13542	8817	3656	12200	8550	4018	11346	8372	4235
	24.0	32	17839	10872	3071	14685	8971	2299	13539	8287	2726	15006	9173	3511	14396	8817	3692	12688	8728	4127	11590	8639	4380
(1.2+1.2+3.5) + (1.8+2.5+2.5)	12.0	18	13584	9319	2890	9790	7907	2184	9061	7299	2574	10004	8104	3330	9638	7748	3475	9028	7303	3729	8662	6947	3873
	14.0	20	13584	9319	2890	10519	7907	2184	9790	7375	2604	10736	8104	3367	10370	7837	3511	9638	7303	3765	9272	7036	3946
	16.0	22	13584	9916	2936	11248	7907	2213	10415	7375	2635	11468	8104	3403	11102	7837	3584	10370	7303	3837	10004	7036	3982
	18.0	25	14566	10633	2981	11977	8591	2242	11040	7983	2665	12200	8817	3439	11712	8461	3584	10980	7926	3873	10492	7570	4018
	19.0	27	15057	10991	3026	12393	9047	2270	11456	8363	2695	12688	9262	3475	12200	8906	3620	11468	8372	3873	10980	8015	4018
	22.0	30	16693	10872	3026	13747	8971	2270	12706	8287	2695	14030	9173	3511	13542	8817	3656	12200	8550	4018	11346	8372	4235
	24.0	32	17839	10872	3071	14685	8971	2299	13539	8287	2726	15006	9173	3511	14396	8817	3692	12688	8728	4127	11590	8639	4380
(1.2+1.2+3.5) + (1.8+2.5+3.5)	12.0	18	13584	9319	2890	9790	7907	2184	9061	7299	2574	10004	8104	3330	9638	7748	3475	9028	7303	3729	8662	6947	3873
	14.0	20	13584	9319	2890	10519	7907	2184	9790	7375	2604	10736	8104	3367	10370	7837	3511	9638	7303	3765	9272	7036	3946
	16.0	22	13584	9916	2936	11248	7907	2213	10415	7375	2635	11468	8104	3403	11102	7837	3584	10370	7303	3837	10004	7036	3982
	18.0	25	14566	10633	2981	11977	8591	2242	11040	7983	2665	12200	8817	3439	11712	8461	3584	10980	7926	3873	10492	7570	4018
	19.0	27	15057	10991	3026	12393	9047	2270	11456	8363	2695	12688	9262	3475	12200	8906	3620	11468	8372	3873	10980	8015	4018
	22.0	30	16693	10872	3026	13747	8971	2270	12706	8287	2695	14030	9173	3511	13542	8817	3656	12200	8550	4018	11346	8372	4235
	24.0	32	17839	10872	3071	14685	8971	2299	13539	8287	2726	15006	9173	3511	14396	8817	3692	12688	8728	4127	11590	8639	4380
(1.2+1.2+3.5) + (1.8+3.5+3.5)	12.0	18	13584	9319	2890	9790	7907	2184	9061	7299	2574	10004	8104	3330	9638	7748	3475	9028	7303	3729	8662	6947	3873
	14.0	20	13584	9319	2890	10519	7907	2184	9790	7375	2604	10736	8104	3367	10370	7837	3511	9638	7303	3765	9272	7036	3946
	16.0	22	13584	9916	2936	11248	7907	2213	10415	7375	2635	11468	8104	3403	11102	7837	3584	10370	7303	3837	10004	7036	3982
	18.0	25	14566	10633	2981	11977	8591	2242	11040	7983	2665	12200	8817	3439	11712	8461	3584	10980	7926	3873	10492	7570	4018
	19.0	27	15057	10991	3026	12393	9047	2270	11456	8363	2695	12688	9262	3475	12200	8906	3620	11468	8372	3873	10980	8015	4018
	22.0	30	16693	10872	3026	13747	8971	2270	12706	8287	2695	14030	9173	3511	13542	8817	3656	12200	8550	4018	11346	8372	4235
	24.0	32	17839	10872	3071	14685	8971	2299	13539	8287	2726	15006	9173	3511	14396	8817	3692	12688	8728	4127	11590	8639	4380
(1.2+1.2+3.5) + (2.5+2.5+2.5)	12.0	18	13584	9319	2890	9790	7907	2184	9061	7299	2574	10004	8104	3330	9638	7748	3475	9028	7303	3729	8662	6947	3873
	14.0	20	13584	9319	2890	10519	7907	2184	9790	7375	2604	10736	8104	3367	10370	7837	3511	9638	7303	3765	9272	7036	3946
	16.0	22	13584	9916	2936	11248	7907	2213	10415	7375	2635	11468	8104	3403	11102	7837	3584	10370	7303	3837	10004	7036	3982
	18.0	25	14566	10633	2981	11977	8591	2242	11040	7983	2665	12200	8817	3439	11712	8461	3584	10980	7926	3873	10492	7570	4018
	19.0	27	15057	10991	3026	12393	9047	2270	11456	8363	2695	12688	9262	3475	12200	8906	3620	11468	8372	3873	10980	8015	4018
	22.0	30	16693	10872	3026	13747	8971	2270	12706	8287	2695	14030	9173	3511	13542	8817	3656	12200	8550	4018	11346	8372	4235
	24.0	32	17839	10872	3071	14685	8971	2299	13539	8287	2726	15006	9173	3511	14396	8817	3692	12688	8728	4127	11590	8639	4380
(1.2+1.2+3.5) + (2.5+2.5+3.5)	12.0	18	13584	9319	2890	9790	7907	2184	9061	7299	2574	10004	8104	3330	9638	7748	3475	9028	7303	3729	8662	6947	3873
	14.0	20	13584	9319	2890	10519	7907	2184	9790	7375	2604	10736	8104	3367	10370	7837	3511	9638	7303	3765	9272	7036	3946
	16.0	22	13584	9916	2936	11248	7907	2213	10415	7375	2635	11468	8104	3403	11102	7837	3584	10370	7303	3837	10004	7036	3982
	18.0	25	14566	10633	2981	11977	8591	2242	11040	7983	2665	12200	8817	3439	11712	8461	3584	10980	7926	3873	10492	7570	4018
	19.0	27	15057	10991	3026	12393	9047	2270	11456	8363	2695	12688	9262	3475	12200	8906	3620	11468	8372	3873	10980	8015	4018
	22.0	30	16693	10872	3026	13747	8971	2270	12706	8287	2695	14030	9173	3511	13542	8817	3656	12200	8550	4018	11346	8372	4235
	24.0	32	17839	10872	3071	14685	8971	2299	13539	8287	2726	15006	9173	3511	14396	8817	3692	12688	8728	4127	11590	8639	4380
(1.2+1.2+5) + (1.2+1.2+1.2)	12.0	18	11023	7562	2535	7944	6416	1916	7353	5923	2258	8118	6577	2921	7821	6287	3048	7326	5926	3270	7029	5637	3397
	14.0	20	11023	7562	2535	8536	6416	1916	7944	5984	2284	8712	6577	2953	8415	6360	3080	7821	5926	3302	7524	5709	3461
	16.0	22	11023	8047	2575	9127	6416	1941	8451	5984	2311	9306	6577	2985	9009	6360	3143	8415	5926	3366	8118	5709	3493
	18.0	25	11820	8628	2614	9719	6971	1966	8958	6478	2337	9900	7155	3016	9504	6866	3143	8910	6432	3397	8514	6143	3524
	19.0	27	12218	8919	2654	10057	7342	1991	9296	6786	2364	10296	7516	3048	9900	7227	3175	9306	6793	3397	8910	6504	3524
	22.0	30	13546	8822	2654	11156	7280	1991	10310	6725	2364	11385	7444	3080	10989	7155	3207	9900	6938	3524	9207	6793	3715
	24.0	32	14476	8822	2693	11916	7280	2017	10987	6725	2391	12177	7444	3080	11682	7155	3239	10296	7082	3620	9405	7010	3842

	INDOOR		OUTDOOR TEMPERATURE (°CDB)																				
	EWB	EDB	-10			21			27			32			35			40			43		
	°C	°C	TC	SHC	PI	TC	SHC	PI	TC	SHC	PI	TC	SHC	PI	TC	SHC	PI	TC	SHC	PI	TC	SHC	PI
(1.2+1.2+5) + (1.2+1.2+1.8)	12.0	18	11691	8020	2671	8426	6805	2018	7798	6282	2379	8610	6975	3077	8295	6669	3211	7770	6285	3445	7455	5979	3579
	14.0	20	11691	8020	2671	9053	6805	2018	8426	6347	2407	9240	6975	3111	8925	6745	3245	8295	6285	3479	7980	6055	3646
	16.0	22	11691	8534	2713	9680	6805	2045	8963	6347	2435	9870	6975	3144	9555	6745	3312	8925	6285	3546	8610	6055	3680
	18.0	25	12536	9151	2754	10308	7394	2071	9501	6870	2463	10500	7588	3178	10080	7282	3312	9450	6822	3579	9030	6515	3713
	19.0	27	12959	9460	2796	10666	7787	2098	9860	7198	2491	10920	7972	3211	10500	7665	3345	9870	7205	3579	9450	6899	3713
	22.0	30	14367	9357	2796	11832	7721	2098	10935	7132	2491	12075	7895	3245	11655	7588	3378	10500	7358	3713	9765	7205	3914
	24.0	32	15353	9357	2838	12638	7721	2124	11652	7132	2519	12915	7895	3245	12390	7588	3412	10920	7512	3813	9975	7435	4047
(1.2+1.2+5) + (1.2+1.2+2.5)	12.0	18	12470	8555	2830	8987	7259	2139	8318	6700	2521	9184	7440	3261	8848	7113	3403	8288	6704	3651	7952	6377	3793
	14.0	20	12470	8555	2830	9657	7259	2139	8987	6770	2550	9856	7440	3297	9520	7195	3439	8848	6704	3687	8512	6459	3864
	16.0	22	12470	9103	2875	10326	7259	2167	9561	6770	2580	10528	7440	3332	10192	7195	3510	9520	6704	3758	9184	6459	3900
	18.0	25	13372	9761	2919	10995	7887	2195	10135	7328	2610	11200	8094	3368	10752	7767	3510	10080	7277	3793	9632	6950	3935
	19.0	27	13822	10090	2963	11378	8306	2223	10517	7677	2639	11648	8503	3403	11200	8176	3545	10528	7685	3793	10080	7358	3935
	22.0	30	15325	9981	2963	12620	8236	2223	11664	7608	2639	12880	8421	3439	12432	8094	3580	11200	7849	3935	10416	7685	4148
	24.0	32	16377	9981	3007	13481	8236	2252	12429	7608	2669	13776	8421	3439	13216	8094	3616	11648	8012	4041	10640	7931	4289
(1.2+1.2+5) + (1.2+1.2+3.5)	12.0	18	13584	9319	2890	9790	7907	2184	9061	7299	2574	10004	8104	3330	9638	7748	3475	9028	7303	3729	8662	6947	3873
	14.0	20	13584	9319	2890	10519	7907	2184	9790	7375	2604	10736	8104	3367	10370	7837	3511	9638	7303	3765	9272	7036	3946
	16.0	22	13584	9916	2936	11248	7907	2213	10415	7375	2635	11468	8104	3403	11102	7837	3584	10370	7303	3837	10004	7036	3982
	18.0	25	14566	10633	2981	11977	8591	2242	11040	7983	2665	12200	8817	3439	11712	8461	3584	10980	7926	3873	10492	7570	4018
	19.0	27	15057	10991	3026	12393	9047	2270	11456	8363	2695	12688	9262	3475	12200	8906	3620	11468	8372	3873	10980	8015	4018
	22.0	30	16693	10872	3026	13747	8971	2270	12706	8287	2695	14030	9173	3511	13542	8817	3656	12200	8550	4018	11346	8372	4235
	24.0	32	17839	10872	3071	14685	8971	2299	13539	8287	2726	15006	9173	3511	14396	8817	3692	12688	8728	4127	11590	8639	4380
(1.2+1.2+5) + (1.2+1.2+5)	12.0	18	14029	9624	3345	10111	8166	2528	9358	7538	2979	10332	8370	3855	9954	8002	4022	9324	7542	4316	8946	7174	4483
	14.0	20	14029	9624	3345	10864	8166	2528	10111	7616	3015	11088	8370	3897	10710	8094	4064	9954	7542	4358	9576	7266	4567
	16.0	22	14029	10241	3398	11617	8166	2561	10756	7616	3050	11844	8370	3939	11466	8094	4148	10710	7542	4441	10332	7266	4609
	18.0	25	15043	10982	3450	12370	8873	2595	11401	8245	3085	12600	9106	3981	12096	8738	4148	11340	8186	4483	10836	7818	4651
	19.0	27	15550	11352	3502	12800	9344	2628	11832	8637	3120	13104	9566	4022	12600	9198	4190	11844	8646	4483	11340	8278	4651
	22.0	30	17240	11228	3502	14198	9265	2628	13122	8559	3120	14490	9474	4064	13986	9106	4232	12600	8830	4651	11718	8646	4902
	24.0	32	18424	11228	3555	15166	9265	2661	13983	8559	3155	15498	9474	4064	14868	9106	4274	13104	9014	4777	11970	8922	5070
(1.2+1.2+5) + (1.2+1.8+1.8)	12.0	18	12359	8479	2807	8907	7194	2121	8244	6641	2500	9102	7374	3234	8769	7050	3374	8214	6644	3620	7881	6320	3761
	14.0	20	12359	8479	2807	9570	7194	2121	8907	6710	2529	9768	7374	3269	9435	7131	3410	8769	6644	3656	8436	6401	3831
	16.0	22	12359	9022	2850	10234	7194	2149	9476	6710	2558	10434	7374	3304	10101	7131	3480	9435	6644	3726	9102	6401	3867
	18.0	25	13252	9674	2894	10897	7816	2177	10044	7263	2588	11100	8022	3339	10656	7698	3480	9990	7212	3761	9546	6888	3902
	19.0	27	13699	10000	2938	11276	8231	2205	10423	7609	2617	11544	8427	3374	11100	8103	3515	10434	7617	3761	9990	7293	3902
	22.0	30	15188	9892	2938	12508	8162	2205	11560	7540	2617	12765	8346	3410	12321	8022	3550	11100	7779	3902	10323	7617	4113
	24.0	32	16230	9892	2982	13361	8162	2232	12318	7540	2647	13653	8346	3410	13098	8022	3585	11544	7941	4007	10545	7860	4253
(1.2+1.2+5) + (1.2+1.8+2.5)	12.0	18	13138	9013	3094	9469	7648	2338	8764	7059	2756	9676	7839	3565	9322	7494	3720	8732	7063	3991	8378	6719	4146
	14.0	20	13138	9013	3094	10174	7648	2338	9469	7133	2788	10384	7839	3604	10030	7580	3759	9322	7063	4030	8968	6805	4224
	16.0	22	13138	9591	3142	10879	7648	2369	10073	7133	2820	11092	7839	3643	10738	7580	3836	10030	7063	4108	9676	6805	4263
	18.0	25	14088	10284	3191	11584	8309	2400	10678	7721	2853	11800	8528	3681	11328	8183	3836	10620	7666	4146	10148	7322	4301
	19.0	27	14563	10631	3239	11987	8751	2430	11080	8089	2885	12272	8959	3720	11800	8614	3875	11092	8097	4146	10620	7753	4301
	22.0	30	16146	10515	3239	13297	8677	2430	12289	8015	2885	13570	8872	3759	13098	8528	3914	11800	8269	4301	10974	8097	4534
	24.0	32	17254	10515	3287	14203	8677	2461	13095	8015	2918	14514	8872	3759	13924	8528	3953	12272	8442	4418	11210	8356	4689
(1.2+1.2+5) + (1.2+1.8+3.5)	12.0	18	14029	9624	3286	10111	8166	2483	9358	7538	2926	10332	8370	3786	9954	8002	3950	9324	7542	4238	8946	7174	4403
	14.0	20	14029	9624	3286	10864	8166	2483	10111	7616	2961	11088	8370	3827	10710	8094	3992	9954	7542	4280	9576	7266	4485
	16.0	22	14029	10241	3337	11617	8166	2516	10756	7616	2995	11844	8370	3868	11466	8094	4074	10710	7542	4362	10332	7266	4527
	18.0	25	15043	10982	3388	12370	8873	2548	11401	8245	3029	12600	9106	3909	12096	8738	4074	11340	8186	4403	10836	7818	4568
	19.0	27	15550	11352	3440	12800	9344	2581	11832	8637	3064	13104	9566	3950	12600	9198	4115	11844	8646	4403	11340	8278	4568
	22.0	30	17240	11228	3440	14198	9265	2581	13122	8559	3064	14490	9474	3992	13986	9106	4156	12600	8830	4568	11718	8646	4815
	24.0	32	18424	11228	3491	15166	9265	2614	13983	8559	3098	15498	9474	3992	14868	9106	4197	13104	9014	4691	11970	8922	4979

	INDOOR		OUTDOOR TEMPERATURE (°CDB)																					
	EWB	EDB	-10			21			27			32			35			40			43			
	°C	°C	TC	SHC	PI	TC	SHC	PI	TC	SHC	PI	TC	SHC	PI	TC	SHC	PI	TC	SHC	PI	TC	SHC	PI	
(1.2+1.2+5) + (1.2+1.8+5)	12.0	18	14029	9624	3345	10111	8166	2528	9358	7538	2979	10332	8370	3855	9954	8002	4022	9324	7542	4316	8946	7174	4483	
	14.0	20	14029	9624	3345	10864	8166	2528	10111	7616	3015	11088	8370	3897	10710	8094	4064	9954	7542	4358	9576	7266	4567	
	16.0	22	14029	10241	3398	11617	8166	2561	10756	7616	3050	11844	8370	3939	11466	8094	4148	10710	7542	4441	10332	7266	4609	
	18.0	25	15043	10982	3450	12370	8873	2595	11401	8245	3085	12600	9106	3981	12096	8738	4148	11340	8186	4483	10836	7818	4651	
	19.0	27	15550	11352	3502	12800	9344	2628	11832	8637	3120	13104	9566	4022	12600	9198	4190	11844	8646	4483	11340	8278	4651	
	22.0	30	17240	11228	3502	14198	9265	2628	13122	8559	3120	14490	9474	4064	13986	9106	4232	12600	8830	4651	11718	8646	4902	
	24.0	32	18424	11228	3555	15166	9265	2661	13983	8559	3155	15498	9474	4064	14868	9106	4274	13104	9014	4777	11970	8922	5070	
(1.2+1.2+5) + (1.2+2.5+2.5)	12.0	18	13918	9548	3286	10030	8101	2483	9284	7478	2926	10250	8304	3786	9875	7939	3950	9250	7483	4238	8875	7118	4403	
	14.0	20	13918	9548	3286	10777	8101	2483	10030	7556	2961	11000	8304	3827	10625	8030	3992	9875	7483	4280	9500	7209	4485	
	16.0	22	13918	10160	3337	11524	8101	2516	10671	7556	2995	11750	8304	3868	11375	8030	4074	10625	7483	4362	10250	7209	4527	
	18.0	25	14924	10894	3388	12271	8802	2548	11311	8179	3029	12500	9034	3909	12000	8669	4074	11250	8121	4403	10750	7756	4568	
	19.0	27	15427	11262	3440	12698	9270	2581	11738	8569	3064	13000	9490	3950	12500	9125	4115	11750	8578	4403	11250	8213	4568	
	22.0	30	17104	11139	3440	14085	9192	2581	13018	8491	3064	14375	9399	3992	13875	9034	4156	12500	8760	4568	11625	8578	4815	
	24.0	32	18277	11139	3491	15046	9192	2614	13872	8491	3098	15375	9399	3992	14750	9034	4197	13000	8943	4691	11875	8851	4979	
(1.2+1.2+5) + (1.2+2.5+3.5)	12.0	18	14029	9624	3345	10111	8166	2528	9358	7538	2979	10332	8370	3855	9954	8002	4022	9324	7542	4316	8946	7174	4483	
	14.0	20	14029	9624	3345	10864	8166	2528	10111	7616	3015	11088	8370	3897	10710	8094	4064	9954	7542	4358	9576	7266	4567	
	16.0	22	14029	10241	3398	11617	8166	2561	10756	7616	3050	11844	8370	3939	11466	8094	4148	10710	7542	4441	10332	7266	4609	
	18.0	25	15043	10982	3450	12370	8873	2595	11401	8245	3085	12600	9106	3981	12096	8738	4148	11340	8186	4483	10836	7818	4651	
	19.0	27	15550	11352	3502	12800	9344	2628	11832	8637	3120	13104	9566	4022	12600	9198	4190	11844	8646	4483	11340	8278	4651	
	22.0	30	17240	11228	3502	14198	9265	2628	13122	8559	3120	14490	9474	4064	13986	9106	4232	12600	8830	4651	11718	8646	4902	
	24.0	32	18424	11228	3555	15166	9265	2661	13983	8559	3155	15498	9474	4064	14868	9106	4274	13104	9014	4777	11970	8922	5070	
(1.2+1.2+5) + (1.2+3.5+3.5)	12.0	18	14029	9624	3345	10111	8166	2528	9358	7538	2979	10332	8370	3855	9954	8002	4022	9324	7542	4316	8946	7174	4483	
	14.0	20	14029	9624	3345	10864	8166	2528	10111	7616	3015	11088	8370	3897	10710	8094	4064	9954	7542	4358	9576	7266	4567	
	16.0	22	14029	10241	3398	11617	8166	2561	10756	7616	3050	11844	8370	3939	11466	8094	4148	10710	7542	4441	10332	7266	4609	
	18.0	25	15043	10982	3450	12370	8873	2595	11401	8245	3085	12600	9106	3981	12096	8738	4148	11340	8186	4483	10836	7818	4651	
	19.0	27	15550	11352	3502	12800	9344	2628	11832	8637	3120	13104	9566	4022	12600	9198	4190	11844	8646	4483	11340	8278	4651	
	22.0	30	17240	11228	3502	14198	9265	2628	13122	8559	3120	14490	9474	4064	13986	9106	4232	12600	8830	4651	11718	8646	4902	
	24.0	32	18424	11228	3555	15166	9265	2661	13983	8559	3155	15498	9474	4064	14868	9106	4274	13104	9014	4777	11970	8922	5070	
(1.2+1.2+5) + (1.2+3.5+3.5)	12.0	18	14029	9624	3345	10111	8166	2528	9358	7538	2979	10332	8370	3855	9954	8002	4022	9324	7542	4316	8946	7174	4483	
	14.0	20	14029	9624	3345	10864	8166	2528	10111	7616	3015	11088	8370	3897	10710	8094	4064	9954	7542	4358	9576	7266	4567	
	16.0	22	14029	10241	3398	11617	8166	2561	10756	7616	3050	11844	8370	3939	11466	8094	4148	10710	7542	4441	10332	7266	4609	
	18.0	25	15043	10982	3450	12370	8873	2595	11401	8245	3085	12600	9106	3981	12096	8738	4148	11340	8186	4483	10836	7818	4651	
	19.0	27	15550	11352	3502	12800	9344	2628	11832	8637	3120	13104	9566	4022	12600	9198	4190	11844	8646	4483	11340	8278	4651	
	22.0	30	17240	11228	3502	14198	9265	2628	13122	8559	3120	14490	9474	4064	13986	9106	4232	12600	8830	4651	11718	8646	4902	
	24.0	32	18424	11228	3555	15166	9265	2661	13983	8559	3155	15498	9474	4064	14868	9106	4274	13104	9014	4777	11970	8922	5070	
(1.2+1.2+5) + (1.8+1.8+1.8)	12.0	18	13027	8937	3094	9389	7583	2338	8689	6999	2756	9594	7772	3565	9243	7431	3720	8658	7004	3991	8307	6662	4146	
	14.0	20	13027	8937	3094	10088	7583	2338	9389	7072	2788	10296	7772	3604	9945	7516	3759	9243	7004	4030	8892	6747	4224	
	16.0	22	13027	9510	3142	10787	7583	2369	9988	7072	2820	10998	7772	3643	10647	7516	3836	9945	7004	4108	9594	6747	4263	
	18.0	25	13969	10197	3191	11486	8239	2400	10587	7656	2853	11700	8456	3681	11232	8114	3836	10530	7601	4146	10062	7260	4301	
	19.0	27	14440	10541	3239	11885	8676	2430	10987	8020	2885	12168	8883	3720	11700	8541	3875	10998	8029	4146	10530	7687	4301	
	22.0	30	16009	10426	3239	13184	8603	2430	12185	7947	2885	13455	8797	3759	12987	8456	3914	11700	8199	4301	10881	8029	4534	
	24.0	32	17108	10426	3287	14083	8603	2461	12984	7947	2918	14391	8797	3759	13806	8456	3953	12168	8370	4418	11115	8285	4689	
(1.2+1.2+5) + (1.8+1.8+2.5)	12.0	18	13806	9471	3286	9950	8036	2483	9209	7418	2926	10168	8237	3786	9796	7875	3950	9176	7423	4238	8804	7061	4403	
	14.0	20	13806	9471	3286	10691	8036	2483	9950	7495	2961	10912	8237	3827	10540	7966	3992	9796	7423	4280	9424	7151	4485	
	16.0	22	13806	10079	3337	11432	8036	2516	10585	7495	2995	11656	8237	3868	11284	7966	4074	10540	7423	4362	10168	7151	4527	
	18.0	25	14804	10807	3388	12173	8732	2548	11220	8114	3029	12400	8961	3909	11904	8599	4074	11160	8056	4403	10664	7694	4568	
	19.0	27	15303	11171	3440	12597	9196	2581	11644	8500	3064	12896	9414	3950	12400	9052	4115	11656	8509	4403	11160	8147	4568	
	22.0	30	16967	11050	3440	13973	9118	2581	12914	8423	3064	14260	9324	3992	13764	8961	4156	12400	8690	4568	11532	8509	4815	
	24.0	32	18131	11050	3491	14925	9118	2614	13761	8423	3098	15252	9324	3992	14632	8961	4197	12896	8871	4691	11780	8780	4979	
(1.2+1.2+5) + (1.8+1.8+3.5)	12.0	18	14029	9624	3345	10111	8166	2528	9358	7538	2979	10332	8370	3855	9954	8002	4022	9324	7542	4316	8946	7174	4483	
	14.0	20	14029	9624	3345	10864	8166	2528	10111	7616	3015	11088	8370	3897	10710	8094	4064	9954	7542	4358	9576	7266	4567	
	16.0	22	14029	10241	3398	11617	8166	2561	10756	7616	3050	11844	8370	3939	11466	8094	4148	10710	7542	4441	10332	7266	4609	
	18.0	25	15043	10982	3450	12370	8873	2595	11401	8245	3085	12600	9106	3981	12096	8738	4148	11340	8186	4483	10836	7818	4651	
	19.0	27	15550	11352	3502	12800	9344	2628	11832	8637	3120	13104	9566	4022	12600	9198	4190	11844	8646	4483	11340	8278	4651	
	22.0	30	17240	11228	3502	14198	9265	2628	13122	8559	3120	14490	9474	4064	13986	9106	4232	12600	8830	4651	11718	8646	4902	
	24.0	32	18424	11228	3555	15166	9265	2661	13983	8559	3155	15498	9474	4064	14868	9106	4274	13104	9014	4777	11970	8922	5070	

	INDOOR		OUTDOOR TEMPERATURE (°CDB)																				
	EWB	EDB	-10			21			27			32			35			40			43		
	°C	°C	TC	SHC	PI	TC	SHC	PI	TC	SHC	PI	TC	SHC	PI	TC	SHC	PI	TC	SHC	PI	TC	SHC	PI
(1.2+1.2+5) + (1.8+1.8+5)	12.0	18	14029	9624	3345	10111	8166	2528	9358	7538	2979	10332	8370	3855	9954	8002	4022	9324	7542	4316	8946	7174	4483
	14.0	20	14029	9624	3345	10864	8166	2528	10111	7616	3015	11088	8370	3897	10710	8094	4064	9954	7542	4358	9576	7266	4567
	16.0	22	14029	10241	3398	11617	8166	2561	10756	7616	3050	11844	8370	3939	11466	8094	4148	10710	7542	4441	10332	7266	4609
	18.0	25	15043	10982	3450	12370	8873	2595	11401	8245	3085	12600	9106	3981	12096	8738	4148	11340	8186	4483	10836	7818	4651
	19.0	27	15550	11352	3502	12800	9344	2628	11832	8637	3120	13104	9566	4022	12600	9198	4190	11844	8646	4483	11340	8278	4651
	22.0	30	17240	11228	3502	14198	9265	2628	13122	8559	3120	14490	9474	4064	13986	9106	4232	12600	8830	4651	11718	8646	4902
	24.0	32	18424	11228	3555	15166	9265	2661	13983	8559	3155	15498	9474	4064	14868	9106	4274	13104	9014	4777	11970	8922	5070
(1.2+1.2+5) + (1.8+2.5+2.5)	12.0	18	14029	9624	3345	10111	8166	2528	9358	7538	2979	10332	8370	3855	9954	8002	4022	9324	7542	4316	8946	7174	4483
	14.0	20	14029	9624	3345	10864	8166	2528	10111	7616	3015	11088	8370	3897	10710	8094	4064	9954	7542	4358	9576	7266	4567
	16.0	22	14029	10241	3398	11617	8166	2561	10756	7616	3050	11844	8370	3939	11466	8094	4148	10710	7542	4441	10332	7266	4609
	18.0	25	15043	10982	3450	12370	8873	2595	11401	8245	3085	12600	9106	3981	12096	8738	4148	11340	8186	4483	10836	7818	4651
	19.0	27	15550	11352	3502	12800	9344	2628	11832	8637	3120	13104	9566	4022	12600	9198	4190	11844	8646	4483	11340	8278	4651
	22.0	30	17240	11228	3502	14198	9265	2628	13122	8559	3120	14490	9474	4064	13986	9106	4232	12600	8830	4651	11718	8646	4902
	24.0	32	18424	11228	3555	15166	9265	2661	13983	8559	3155	15498	9474	4064	14868	9106	4274	13104	9014	4777	11970	8922	5070
(1.2+1.2+5) + (1.8+2.5+3.5)	12.0	18	14029	9624	3345	10111	8166	2528	9358	7538	2979	10332	8370	3855	9954	8002	4022	9324	7542	4316	8946	7174	4483
	14.0	20	14029	9624	3345	10864	8166	2528	10111	7616	3015	11088	8370	3897	10710	8094	4064	9954	7542	4358	9576	7266	4567
	16.0	22	14029	10241	3398	11617	8166	2561	10756	7616	3050	11844	8370	3939	11466	8094	4148	10710	7542	4441	10332	7266	4609
	18.0	25	15043	10982	3450	12370	8873	2595	11401	8245	3085	12600	9106	3981	12096	8738	4148	11340	8186	4483	10836	7818	4651
	19.0	27	15550	11352	3502	12800	9344	2628	11832	8637	3120	13104	9566	4022	12600	9198	4190	11844	8646	4483	11340	8278	4651
	22.0	30	17240	11228	3502	14198	9265	2628	13122	8559	3120	14490	9474	4064	13986	9106	4232	12600	8830	4651	11718	8646	4902
	24.0	32	18424	11228	3555	15166	9265	2661	13983	8559	3155	15498	9474	4064	14868	9106	4274	13104	9014	4777	11970	8922	5070
(1.2+1.2+5) + (1.8+3.5+3.5)	12.0	18	14029	9624	3345	10111	8166	2528	9358	7538	2979	10332	8370	3855	9954	8002	4022	9324	7542	4316	8946	7174	4483
	14.0	20	14029	9624	3345	10864	8166	2528	10111	7616	3015	11088	8370	3897	10710	8094	4064	9954	7542	4358	9576	7266	4567
	16.0	22	14029	10241	3398	11617	8166	2561	10756	7616	3050	11844	8370	3939	11466	8094	4148	10710	7542	4441	10332	7266	4609
	18.0	25	15043	10982	3450	12370	8873	2595	11401	8245	3085	12600	9106	3981	12096	8738	4148	11340	8186	4483	10836	7818	4651
	19.0	27	15550	11352	3502	12800	9344	2628	11832	8637	3120	13104	9566	4022	12600	9198	4190	11844	8646	4483	11340	8278	4651
	22.0	30	17240	11228	3502	14198	9265	2628	13122	8559	3120	14490	9474	4064	13986	9106	4232	12600	8830	4651	11718	8646	4902
	24.0	32	18424	11228	3555	15166	9265	2661	13983	8559	3155	15498	9474	4064	14868	9106	4274	13104	9014	4777	11970	8922	5070
(1.2+1.2+5) + (2.5+2.5+2.5)	12.0	18	14029	9624	3345	10111	8166	2528	9358	7538	2979	10332	8370	3855	9954	8002	4022	9324	7542	4316	8946	7174	4483
	14.0	20	14029	9624	3345	10864	8166	2528	10111	7616	3015	11088	8370	3897	10710	8094	4064	9954	7542	4358	9576	7266	4567
	16.0	22	14029	10241	3398	11617	8166	2561	10756	7616	3050	11844	8370	3939	11466	8094	4148	10710	7542	4441	10332	7266	4609
	18.0	25	15043	10982	3450	12370	8873	2595	11401	8245	3085	12600	9106	3981	12096	8738	4148	11340	8186	4483	10836	7818	4651
	19.0	27	15550	11352	3502	12800	9344	2628	11832	8637	3120	13104	9566	4022	12600	9198	4190	11844	8646	4483	11340	8278	4651
	22.0	30	17240	11228	3502	14198	9265	2628	13122	8559	3120	14490	9474	4064	13986	9106	4232	12600	8830	4651	11718	8646	4902
	24.0	32	18424	11228	3555	15166	9265	2661	13983	8559	3155	15498	9474	4064	14868	9106	4274	13104	9014	4777	11970	8922	5070
(1.2+1.2+5) + (2.5+2.5+3.5)	12.0	18	14029	9624	3345	10111	8166	2528	9358	7538	2979	10332	8370	3855	9954	8002	4022	9324	7542	4316	8946	7174	4483
	14.0	20	14029	9624	3345	10864	8166	2528	10111	7616	3015	11088	8370	3897	10710	8094	4064	9954	7542	4358	9576	7266	4567
	16.0	22	14029	10241	3398	11617	8166	2561	10756	7616	3050	11844	8370	3939	11466	8094	4148	10710	7542	4441	10332	7266	4609
	18.0	25	15043	10982	3450	12370	8873	2595	11401	8245	3085	12600	9106	3981	12096	8738	4148	11340	8186	4483	10836	7818	4651
	19.0	27	15550	11352	3502	12800	9344	2628	11832	8637	3120	13104	9566	4022	12600	9198	4190	11844	8646	4483	11340	8278	4651
	22.0	30	17240	11228	3502	14198	9265	2628	13122	8559	3120	14490	9474	4064	13986	9106	4232	12600	8830	4651	11718	8646	4902
	24.0	32	18424	11228	3555	15166	9265	2661	13983	8559	3155	15498	9474	4064	14868	9106	4274	13104	9014	4777	11970	8922	5070
(1.2+1.8+1.8) + (1.2+1.2+1.2)	12.0	18	9353	6416	1996	6740	5444	1508	6239	5025	1778	6888	5580	2300	6636	5335	2400	6216	5028	2575	5964	4783	2675
	14.0	20	9353	6416	1996	7242	5444	1508	6740	5078	1799	7392	5580	2325	7140	5396	2425	6636	5028	2600	6384	4844	2725
	16.0	22	9353	6827	2027	7744	5444	1528	7171	5078	1820	7896	5580	2350	7644	5396	2475	7140	5028	2650	6888	4844	2750
	18.0	25	10029	7321	2058	8246	5915	1548	7601	5496	1840	8400	6071	2375	8064	5825	2475	7560	5457	2675	7224	5212	2775
	19.0	27	10367	7568	2090	8533	6229	1568	7888	5758	1861	8736	6377	2400	8400	6132	2500	7896	5764	2675	7560	5519	2775
	22.0	30	11494	7486	2090	9465	6177	1568	8748	5706	1861	9660	6316	2425	9324	6071	2525	8400	5887	2775	7812	5764	2925
	24.0	32	12282	7486	2121	10111	6177	1588	9322	5706	1882	10332	6316	2425	9912	6071	2550	8736	6009	2850	7980	5948	3025

	INDOOR		OUTDOOR TEMPERATURE (°CDB)																				
	EWB	EDB	-10			21			27			32			35			40			43		
	°C	°C	TC	SHC	PI	TC	SHC	PI	TC	SHC	PI	TC	SHC	PI	TC	SHC	PI	TC	SHC	PI	TC	SHC	PI
(1.2+1.8+1.8) + (1.2+1.2+1.8)	12.0	18	10021	6874	2132	7222	5833	1611	6684	5384	1899	7380	5979	2456	7110	5716	2563	6660	5387	2750	6390	5125	2857
	14.0	20	10021	6874	2132	7760	5833	1611	7222	5440	1921	7920	5979	2483	7650	5782	2590	7110	5387	2777	6840	5190	2910
	16.0	22	10021	7315	2165	8298	5833	1632	7683	5440	1943	8460	5979	2510	8190	5782	2643	7650	5387	2830	7380	5190	2937
	18.0	25	10745	7844	2198	8835	6338	1653	8144	5889	1966	9000	6504	2537	8640	6242	2643	8100	5847	2857	7740	5585	2964
	19.0	27	11107	8108	2232	9143	6674	1675	8451	6169	1988	9360	6833	2563	9000	6570	2670	8460	6176	2857	8100	5913	2964
	22.0	30	12315	8020	2232	10141	6618	1675	9373	6113	1988	10350	6767	2590	9990	6504	2697	9000	6307	2964	8370	6176	3124
	24.0	32	13160	8020	2265	10833	6618	1696	9988	6113	2010	11070	6767	2590	10620	6504	2723	9360	6439	3044	8550	6373	3231
(1.2+1.8+1.8) + (1.2+1.2+2.5)	12.0	18	10800	7409	2292	7784	6287	1732	7204	5803	2041	7954	6444	2640	7663	6160	2755	7178	5806	2956	6887	5523	3071
	14.0	20	10800	7409	2292	8363	6287	1732	7784	5863	2065	8536	6444	2669	8245	6231	2784	7663	5806	2985	7372	5594	3128
	16.0	22	10800	7884	2327	8943	6287	1754	8280	5863	2089	9118	6444	2698	8827	6231	2841	8245	5806	3042	7954	5594	3157
	18.0	25	11581	8454	2363	9523	6831	1777	8777	6347	2113	9700	7010	2727	9312	6727	2841	8730	6302	3071	8342	6019	3186
	19.0	27	11971	8739	2399	9854	7193	1800	9109	6649	2137	10088	7364	2755	9700	7081	2870	9118	6656	3071	8730	6373	3186
	22.0	30	13272	8644	2399	10930	7133	1800	10102	6589	2137	11155	7293	2784	10767	7010	2899	9700	6798	3186	9021	6656	3358
	24.0	32	14183	8644	2435	11675	7133	1823	10765	6589	2161	11931	7293	2784	11446	7010	2927	10088	6939	3272	9215	6869	3473
(1.2+1.8+1.8) + (1.2+1.2+3.5)	12.0	18	11914	8173	2351	8586	6935	1777	7947	6401	2094	8774	7108	2709	8453	6796	2827	7918	6405	3033	7597	6093	3151
	14.0	20	11914	8173	2351	9225	6935	1777	8586	6468	2119	9416	7108	2739	9095	6874	2857	8453	6405	3063	8132	6171	3210
	16.0	22	11914	8697	2388	9865	6935	1800	9134	6468	2143	10058	7108	2768	9737	6874	2916	9095	6405	3122	8774	6171	3240
	18.0	25	12775	9326	2425	10504	7535	1824	9682	7001	2168	10700	7733	2798	10272	7420	2916	9630	6952	3151	9202	6639	3269
	19.0	27	13205	9640	2462	10870	7935	1847	10048	7335	2193	11128	8123	2827	10700	7811	2945	10058	7342	3151	9630	7030	3269
	22.0	30	14641	9535	2462	12057	7868	1847	11144	7268	2193	12305	8045	2857	11877	7733	2974	10700	7499	3269	9951	7342	3446
	24.0	32	15645	9535	2498	12879	7868	1870	11874	7268	2217	13161	8045	2857	12626	7733	3004	11128	7655	3357	10165	7577	3563
(1.2+1.8+1.8) + (1.2+1.2+5)	12.0	18	12359	8479	2807	8907	7194	2121	8244	6641	2500	9102	7374	3234	8769	7050	3374	8214	6644	3620	7881	6320	3761
	14.0	20	12359	8479	2807	9570	7194	2121	8907	6710	2529	9768	7374	3269	9435	7131	3410	8769	6644	3656	8436	6401	3831
	16.0	22	12359	9022	2850	10234	7194	2149	9476	6710	2558	10434	7374	3304	10101	7131	3480	9435	6644	3726	9102	6401	3867
	18.0	25	13252	9674	2894	10897	7816	2177	10044	7263	2588	11100	8022	3339	10656	7698	3480	9990	7212	3761	9546	6888	3902
	19.0	27	13699	10000	2938	11276	8231	2205	10423	7609	2617	11544	8427	3374	11100	8103	3515	10434	7617	3761	9990	7293	3902
	22.0	30	15188	9892	2938	12508	8162	2205	11560	7540	2617	12765	8346	3410	12321	8022	3550	11100	7779	3902	10323	7617	4113
	24.0	32	16230	9892	2982	13361	8162	2232	12318	7540	2647	13653	8346	3410	13098	8022	3585	11544	7941	4007	10545	7860	4253
(1.2+1.8+1.8) + (1.2+1.8+1.8)	12.0	18	10689	7333	2268	7703	6222	1714	7130	5743	2020	7872	6377	2613	7584	6097	2726	7104	5747	2925	6816	5466	3039
	14.0	20	10689	7333	2268	8277	6222	1714	7703	5803	2043	8448	6377	2641	8160	6167	2755	7584	5747	2954	7296	5536	3096
	16.0	22	10689	7803	2303	8851	6222	1736	8195	5803	2067	9024	6377	2670	8736	6167	2812	8160	5747	3010	7872	5536	3124
	18.0	25	11461	8367	2338	9424	6760	1759	8687	6282	2091	9600	6938	2698	9216	6658	2812	8640	6237	3039	8256	5957	3152
	19.0	27	11848	8649	2374	9752	7119	1781	9015	6581	2115	9984	7288	2726	9600	7008	2840	9024	6588	3039	8640	6307	3152
	22.0	30	13136	8555	2374	10818	7059	1781	9998	6521	2115	11040	7218	2755	10656	6938	2868	9600	6728	3152	8928	6588	3323
	24.0	32	14037	8555	2409	11555	7059	1804	10654	6521	2138	11808	7218	2755	11328	6938	2897	9984	6868	3238	9120	6798	3436
(1.2+1.8+1.8) + (1.2+1.8+2.5)	12.0	18	11468	7867	2555	8265	6675	1931	7650	6162	2276	8446	6842	2944	8137	6542	3072	7622	6166	3296	7313	5865	3424
	14.0	20	11468	7867	2555	8881	6675	1931	8265	6226	2302	9064	6842	2976	8755	6617	3104	8137	6166	3328	7828	5940	3488
	16.0	22	11468	8372	2595	9496	6675	1956	8793	6226	2329	9682	6842	3008	9373	6617	3168	8755	6166	3392	8446	5940	3520
	18.0	25	12297	8977	2635	10112	7253	1982	9320	6740	2356	10300	7444	3040	9888	7143	3168	9270	6692	3424	8858	6391	3552
	19.0	27	12712	9280	2675	10463	7638	2007	9672	7061	2383	10712	7820	3072	10300	7519	3200	9682	7068	3424	9270	6767	3552
	22.0	30	14093	9179	2675	11606	7574	2007	10727	6996	2383	11845	7745	3104	11433	7444	3232	10300	7218	3552	9579	7068	3744
	24.0	32	15061	9179	2715	12398	7574	2032	11430	6996	2409	12669	7745	3104	12154	7444	3264	10712	7369	3648	9785	7293	3872
(1.2+1.8+1.8) + (1.2+1.8+3.5)	12.0	18	12359	8479	2747	8907	7194	2076	8244	6641	2446	9102	7374	3165	8769	7050	3302	8214	6644	3543	7881	6320	3681
	14.0	20	12359	8479	2747	9570	7194	2076	8907	6710	2475	9768	7374	3199	9435	7131	3337	8769	6644	3578	8436	6401	3750
	16.0	22	12359	9022	2790	10234	7194	2103	9476	6710	2504	10434	7374	3234	10101	7131	3406	9435	6644	3646	9102	6401	3784
	18.0	25	13252	9674	2832	10897	7816	2130	10044	7263	2533	11100	8022	3268	10656	7698	3406	9990	7212	3681	9546	6888	3818
	19.0	27	13699	10000	2875	11276	8231	2158	10423	7609	2561	11544	8427	3302	11100	8103	3440	10434	7617	3681	9990	7293	3818
	22.0	30	15188	9892	2875	12508	8162	2158	11560	7540	2561	12765	8346	3337	12321	8022	3474	11100	7779	3818	10323	7617	4025
	24.0	32	16230	9892	2918	13361	8162	2185	12318	7540	2590	13653	8346	3337	13098	8022	3509	11544	7941	3922	10545	7860	4162

	INDOOR		OUTDOOR TEMPERATURE (°CDB)																				
	EWB	EDB	-10			21			27			32			35			40			43		
	°C	°C	TC	SHC	PI	TC	SHC	PI	TC	SHC	PI	TC	SHC	PI	TC	SHC	PI	TC	SHC	PI	TC	SHC	PI
(1.2+1.8+1.8) + (1.2+1.8+5)	12.0	18	12359	8479	2807	8907	7194	2121	8244	6641	2500	9102	7374	3234	8769	7050	3374	8214	6644	3620	7881	6320	3761
	14.0	20	12359	8479	2807	9570	7194	2121	8907	6710	2529	9768	7374	3269	9435	7131	3410	8769	6644	3656	8436	6401	3831
	16.0	22	12359	9022	2850	10234	7194	2149	9476	6710	2558	10434	7374	3304	10101	7131	3480	9435	6644	3726	9102	6401	3867
	18.0	25	13252	9674	2894	10897	7816	2177	10044	7263	2588	11100	8022	3339	10656	7698	3480	9990	7212	3761	9546	6888	3902
	19.0	27	13699	10000	2938	11276	8231	2205	10423	7609	2617	11544	8427	3374	11100	8103	3515	10434	7617	3761	9990	7293	3902
	22.0	30	15188	9892	2938	12508	8162	2205	11560	7540	2617	12765	8346	3410	12321	8022	3550	11100	7779	3902	10323	7617	4113
	24.0	32	16230	9892	2982	13361	8162	2232	12318	7540	2647	13653	8346	3410	13098	8022	3585	11544	7941	4007	10545	7860	4253
(1.2+1.8+1.8) + (1.2+2.5+2.5)	12.0	18	12248	8402	2747	8827	7129	2076	8170	6581	2446	9020	7307	3165	8690	6986	3302	8140	6585	3543	7810	6263	3681
	14.0	20	12248	8402	2747	9484	7129	2076	8827	6649	2475	9680	7307	3199	9350	7066	3337	8690	6585	3578	8360	6344	3750
	16.0	22	12248	8941	2790	10141	7129	2103	9390	6649	2504	10340	7307	3234	10010	7066	3406	9350	6585	3646	9020	6344	3784
	18.0	25	13133	9587	2832	10799	7746	2130	9954	7198	2533	11000	7950	3268	10560	7629	3406	9900	7147	3681	9460	6826	3818
	19.0	27	13576	9910	2875	11174	8157	2158	10329	7540	2561	11440	8351	3302	11000	8030	3440	10340	7548	3681	9900	7227	3818
	22.0	30	15051	9802	2875	12395	8089	2158	11456	7472	2561	12650	8271	3337	12210	7950	3474	11000	7709	3818	10230	7548	4025
	24.0	32	16084	9802	2918	13240	8089	2185	12207	7472	2590	13530	8271	3337	12980	7950	3509	11440	7869	3922	10450	7789	4162
(1.2+1.8+1.8) + (1.2+2.5+3.5)	12.0	18	12359	8479	2807	8907	7194	2121	8244	6641	2500	9102	7374	3234	8769	7050	3374	8214	6644	3620	7881	6320	3761
	14.0	20	12359	8479	2807	9570	7194	2121	8907	6710	2529	9768	7374	3269	9435	7131	3410	8769	6644	3656	8436	6401	3831
	16.0	22	12359	9022	2850	10234	7194	2149	9476	6710	2558	10434	7374	3304	10101	7131	3480	9435	6644	3726	9102	6401	3867
	18.0	25	13252	9674	2894	10897	7816	2177	10044	7263	2588	11100	8022	3339	10656	7698	3480	9990	7212	3761	9546	6888	3902
	19.0	27	13699	10000	2938	11276	8231	2205	10423	7609	2617	11544	8427	3374	11100	8103	3515	10434	7617	3761	9990	7293	3902
	22.0	30	15188	9892	2938	12508	8162	2205	11560	7540	2617	12765	8346	3410	12321	8022	3550	11100	7779	3902	10323	7617	4113
	24.0	32	16230	9892	2982	13361	8162	2232	12318	7540	2647	13653	8346	3410	13098	8022	3585	11544	7941	4007	10545	7860	4253
(1.2+1.8+1.8) + (1.2+3.5+3.5)	12.0	18	12359	8479	2807	8907	7194	2121	8244	6641	2500	9102	7374	3234	8769	7050	3374	8214	6644	3620	7881	6320	3761
	14.0	20	12359	8479	2807	9570	7194	2121	8907	6710	2529	9768	7374	3269	9435	7131	3410	8769	6644	3656	8436	6401	3831
	16.0	22	12359	9022	2850	10234	7194	2149	9476	6710	2558	10434	7374	3304	10101	7131	3480	9435	6644	3726	9102	6401	3867
	18.0	25	13252	9674	2894	10897	7816	2177	10044	7263	2588	11100	8022	3339	10656	7698	3480	9990	7212	3761	9546	6888	3902
	19.0	27	13699	10000	2938	11276	8231	2205	10423	7609	2617	11544	8427	3374	11100	8103	3515	10434	7617	3761	9990	7293	3902
	22.0	30	15188	9892	2938	12508	8162	2205	11560	7540	2617	12765	8346	3410	12321	8022	3550	11100	7779	3902	10323	7617	4113
	24.0	32	16230	9892	2982	13361	8162	2232	12318	7540	2647	13653	8346	3410	13098	8022	3585	11544	7941	4007	10545	7860	4253
(1.2+1.8+1.8) + (1.8+1.8+1.8)	12.0	18	11357	7791	2555	8185	6611	1931	7575	6102	2276	8364	6776	2944	8058	6478	3072	7548	6106	3296	7242	5808	3424
	14.0	20	11357	7791	2555	8794	6611	1931	8185	6166	2302	8976	6776	2976	8670	6552	3104	8058	6106	3328	7752	5882	3488
	16.0	22	11357	8290	2595	9404	6611	1956	8707	6166	2329	9588	6776	3008	9282	6552	3168	8670	6106	3392	8364	5882	3520
	18.0	25	12178	8890	2635	10013	7183	1982	9230	6674	2356	10200	7372	3040	9792	7074	3168	9180	6627	3424	8772	6329	3552
	19.0	27	12588	9189	2675	10362	7564	2007	9578	6992	2383	10608	7744	3072	10200	7446	3200	9588	6999	3424	9180	6701	3552
	22.0	30	13957	9090	2675	11494	7500	2007	10623	6928	2383	11730	7669	3104	11322	7372	3232	10200	7148	3552	9486	6999	3744
	24.0	32	14914	9090	2715	12277	7500	2032	11320	6928	2409	12546	7669	3104	12036	7372	3264	10608	7297	3648	9690	7223	3872
(1.2+1.8+1.8) + (1.8+1.8+2.5)	12.0	18	12136	8326	2747	8747	7064	2076	8095	6521	2446	8938	7241	3165	8611	6923	3302	8066	6525	3543	7739	6206	3681
	14.0	20	12136	8326	2747	9398	7064	2076	8747	6589	2475	9592	7241	3199	9265	7002	3337	8611	6525	3578	8284	6286	3750
	16.0	22	12136	8859	2790	10049	7064	2103	9305	6589	2504	10246	7241	3234	9919	7002	3406	9265	6525	3646	8938	6286	3784
	18.0	25	13014	9500	2832	10701	7676	2130	9863	7132	2533	10900	7877	3268	10464	7559	3406	9810	7082	3681	9374	6763	3818
	19.0	27	13452	9820	2875	11073	8083	2158	10235	7472	2561	11336	8275	3302	10900	7957	3440	10246	7480	3681	9810	7161	3818
	22.0	30	14914	9713	2875	12282	8015	2158	11352	7404	2561	12535	8196	3337	12099	7877	3474	10900	7639	3818	10137	7480	4025
	24.0	32	15938	9713	2918	13120	8015	2185	12096	7404	2590	13407	8196	3337	12862	7877	3509	11336	7798	3922	10355	7718	4162
(1.2+1.8+1.8) + (1.8+1.8+3.5)	12.0	18	12359	8479	2807	8907	7194	2121	8244	6641	2500	9102	7374	3234	8769	7050	3374	8214	6644	3620	7881	6320	3761
	14.0	20	12359	8479	2807	9570	7194	2121	8907	6710	2529	9768	7374	3269	9435	7131	3410	8769	6644	3656	8436	6401	3831
	16.0	22	12359	9022	2850	10234	7194	2149	9476	6710	2558	10434	7374	3304	10101	7131	3480	9435	6644	3726	9102	6401	3867
	18.0	25	13252	9674	2894	10897	7816	2177	10044	7263	2588	11100	8022	3339	10656	7698	3480	9990	7212	3761	9546	6888	3902
	19.0	27	13699	10000	2938	11276	8231	2205	10423	7609	2617	11544	8427	3374	11100	8103	3515	10434	7617	3761	9990	7293	3902
	22.0	30	15188	9892	2938	12508	8162	2205	11560	7540	2617	12765	8346	3410	12321	8022	3550	11100	7779	3902	10323	7617	4113
	24.0	32	16230	9892	2982	13361	8162	2232	12318	7540	2647	13653	8346	3410	13098	8022	3585	11544	7941	4007	10545	7860	4253

	INDOOR		OUTDOOR TEMPERATURE (°CDB)																				
	EWB	EDB	-10			21			27			32			35			40			43		
	°C	°C	TC	SHC	PI	TC	SHC	PI	TC	SHC	PI	TC	SHC	PI	TC	SHC	PI	TC	SHC	PI	TC	SHC	PI
(1.2+1.8+1.8) + (1.8+1.8+5)	12.0	18	12359	8479	2807	8907	7194	2121	8244	6641	2500	9102	7374	3234	8769	7050	3374	8214	6644	3620	7881	6320	3761
	14.0	20	12359	8479	2807	9570	7194	2121	8907	6710	2529	9768	7374	3269	9435	7131	3410	8769	6644	3656	8436	6401	3831
	16.0	22	12359	9022	2850	10234	7194	2149	9476	6710	2558	10434	7374	3304	10101	7131	3480	9435	6644	3726	9102	6401	3867
	18.0	25	13252	9674	2894	10897	7816	2177	10044	7263	2588	11100	8022	3339	10656	7698	3480	9990	7212	3761	9546	6888	3902
	19.0	27	13699	10000	2938	11276	8231	2205	10423	7609	2617	11544	8427	3374	11100	8103	3515	10434	7617	3761	9990	7293	3902
	22.0	30	15188	9892	2938	12508	8162	2205	11560	7540	2617	12765	8346	3410	12321	8022	3550	11100	7779	3902	10323	7617	4113
	24.0	32	16230	9892	2982	13361	8162	2232	12318	7540	2647	13653	8346	3410	13098	8022	3585	11544	7941	4007	10545	7860	4253
(1.2+1.8+1.8) + (1.8+2.5+2.5)	12.0	18	12359	8479	2807	8907	7194	2121	8244	6641	2500	9102	7374	3234	8769	7050	3374	8214	6644	3620	7881	6320	3761
	14.0	20	12359	8479	2807	9570	7194	2121	8907	6710	2529	9768	7374	3269	9435	7131	3410	8769	6644	3656	8436	6401	3831
	16.0	22	12359	9022	2850	10234	7194	2149	9476	6710	2558	10434	7374	3304	10101	7131	3480	9435	6644	3726	9102	6401	3867
	18.0	25	13252	9674	2894	10897	7816	2177	10044	7263	2588	11100	8022	3339	10656	7698	3480	9990	7212	3761	9546	6888	3902
	19.0	27	13699	10000	2938	11276	8231	2205	10423	7609	2617	11544	8427	3374	11100	8103	3515	10434	7617	3761	9990	7293	3902
	22.0	30	15188	9892	2938	12508	8162	2205	11560	7540	2617	12765	8346	3410	12321	8022	3550	11100	7779	3902	10323	7617	4113
	24.0	32	16230	9892	2982	13361	8162	2232	12318	7540	2647	13653	8346	3410	13098	8022	3585	11544	7941	4007	10545	7860	4253
(1.2+1.8+1.8) + (1.8+2.5+3.5)	12.0	18	12359	8479	2807	8907	7194	2121	8244	6641	2500	9102	7374	3234	8769	7050	3374	8214	6644	3620	7881	6320	3761
	14.0	20	12359	8479	2807	9570	7194	2121	8907	6710	2529	9768	7374	3269	9435	7131	3410	8769	6644	3656	8436	6401	3831
	16.0	22	12359	9022	2850	10234	7194	2149	9476	6710	2558	10434	7374	3304	10101	7131	3480	9435	6644	3726	9102	6401	3867
	18.0	25	13252	9674	2894	10897	7816	2177	10044	7263	2588	11100	8022	3339	10656	7698	3480	9990	7212	3761	9546	6888	3902
	19.0	27	13699	10000	2938	11276	8231	2205	10423	7609	2617	11544	8427	3374	11100	8103	3515	10434	7617	3761	9990	7293	3902
	22.0	30	15188	9892	2938	12508	8162	2205	11560	7540	2617	12765	8346	3410	12321	8022	3550	11100	7779	3902	10323	7617	4113
	24.0	32	16230	9892	2982	13361	8162	2232	12318	7540	2647	13653	8346	3410	13098	8022	3585	11544	7941	4007	10545	7860	4253
(1.2+1.8+1.8) + (1.8+3.5+3.5)	12.0	18	12359	8479	2807	8907	7194	2121	8244	6641	2500	9102	7374	3234	8769	7050	3374	8214	6644	3620	7881	6320	3761
	14.0	20	12359	8479	2807	9570	7194	2121	8907	6710	2529	9768	7374	3269	9435	7131	3410	8769	6644	3656	8436	6401	3831
	16.0	22	12359	9022	2850	10234	7194	2149	9476	6710	2558	10434	7374	3304	10101	7131	3480	9435	6644	3726	9102	6401	3867
	18.0	25	13252	9674	2894	10897	7816	2177	10044	7263	2588	11100	8022	3339	10656	7698	3480	9990	7212	3761	9546	6888	3902
	19.0	27	13699	10000	2938	11276	8231	2205	10423	7609	2617	11544	8427	3374	11100	8103	3515	10434	7617	3761	9990	7293	3902
	22.0	30	15188	9892	2938	12508	8162	2205	11560	7540	2617	12765	8346	3410	12321	8022	3550	11100	7779	3902	10323	7617	4113
	24.0	32	16230	9892	2982	13361	8162	2232	12318	7540	2647	13653	8346	3410	13098	8022	3585	11544	7941	4007	10545	7860	4253
(1.2+1.8+1.8) + (2.5+2.5+2.5)	12.0	18	12359	8479	2807	8907	7194	2121	8244	6641	2500	9102	7374	3234	8769	7050	3374	8214	6644	3620	7881	6320	3761
	14.0	20	12359	8479	2807	9570	7194	2121	8907	6710	2529	9768	7374	3269	9435	7131	3410	8769	6644	3656	8436	6401	3831
	16.0	22	12359	9022	2850	10234	7194	2149	9476	6710	2558	10434	7374	3304	10101	7131	3480	9435	6644	3726	9102	6401	3867
	18.0	25	13252	9674	2894	10897	7816	2177	10044	7263	2588	11100	8022	3339	10656	7698	3480	9990	7212	3761	9546	6888	3902
	19.0	27	13699	10000	2938	11276	8231	2205	10423	7609	2617	11544	8427	3374	11100	8103	3515	10434	7617	3761	9990	7293	3902
	22.0	30	15188	9892	2938	12508	8162	2205	11560	7540	2617	12765	8346	3410	12321	8022	3550	11100	7779	3902	10323	7617	4113
	24.0	32	16230	9892	2982	13361	8162	2232	12318	7540	2647	13653	8346	3410	13098	8022	3585	11544	7941	4007	10545	7860	4253
(1.2+1.8+1.8) + (2.5+2.5+3.5)	12.0	18	12359	8479	2807	8907	7194	2121	8244	6641	2500	9102	7374	3234	8769	7050	3374	8214	6644	3620	7881	6320	3761
	14.0	20	12359	8479	2807	9570	7194	2121	8907	6710	2529	9768	7374	3269	9435	7131	3410	8769	6644	3656	8436	6401	3831
	16.0	22	12359	9022	2850	10234	7194	2149	9476	6710	2558	10434	7374	3304	10101	7131	3480	9435	6644	3726	9102	6401	3867
	18.0	25	13252	9674	2894	10897	7816	2177	10044	7263	2588	11100	8022	3339	10656	7698	3480	9990	7212	3761	9546	6888	3902
	19.0	27	13699	10000	2938	11276	8231	2205	10423	7609	2617	11544	8427	3374	11100	8103	3515	10434	7617	3761	9990	7293	3902
	22.0	30	15188	9892	2938	12508	8162	2205	11560	7540	2617	12765	8346	3410	12321	8022	3550	11100	7779	3902	10323	7617	4113
	24.0	32	16230	9892	2982	13361	8162	2232	12318	7540	2647	13653	8346	3410	13098	8022	3585	11544	7941	4007	10545	7860	4253
(1.2+1.8+2.5) + (1.2+1.2+1.2)	12.0	18	10132	6951	2284	7302	5898	1726	6758	5444	2034	7462	6045	2631	7189	5779	2746	6734	5447	2946	6461	5182	3060
	14.0	20	10132	6951	2284	7846	5898	1726	7302	5501	2058	8008	6045	2660	7735	5846	2774	7189	5447	2974	6916	5248	3117
	16.0	22	10132	7396	2319	8390	5898	1748	7768	5501	2082	8554	6045	2688	8281	5846	2831	7735	5447	3032	7462	5248	3146
	18.0	25	10865	7931	2355	8934	6408	1771	8234	5954	2106	9100	6577	2717	8736	6311	2831	8190	5912	3060	7826	5647	3175
	19.0	27	11231	8198	2391	9244	6748	1794	8545	6238	2129	9464	6909	2746	9100	6643	2860	8554	6244	3060	8190	5979	3175
	22.0	30	12451	8109	2391	10254	6692	1794	9477	6181	2129	10465	6842	2774	10101	6577	2889	9100	6377	3175	8463	6244	3346
	24.0	32	13306	8109	2426	10953	6692	1816	10099	6181	2153	11193	6842	2774	10738	6577	2917	9464	6510	3260	8645	6444	3461

	INDOOR		OUTDOOR TEMPERATURE (°CDB)																				
	EWB	EDB	-10			21			27			32			35			40			43		
	°C	°C	TC	SHC	PI	TC	SHC	PI	TC	SHC	PI	TC	SHC	PI	TC	SHC	PI	TC	SHC	PI	TC	SHC	PI
(1.2+1.8+2.5) + (1.2+1.2+1.8)	12.0	18	10800	7409	2419	7784	6287	1828	7204	5803	2155	7954	6444	2788	7663	6160	2909	7178	5806	3121	6887	5523	3242
	14.0	20	10800	7409	2419	8363	6287	1828	7784	5863	2180	8536	6444	2818	8245	6231	2939	7663	5806	3151	7372	5594	3303
	16.0	22	10800	7884	2457	8943	6287	1852	8280	5863	2205	9118	6444	2848	8827	6231	3000	8245	5806	3212	7954	5594	3333
	18.0	25	11581	8454	2495	9523	6831	1876	8777	6347	2231	9700	7010	2879	9312	6727	3000	8730	6302	3242	8342	6019	3363
	19.0	27	11971	8739	2533	9854	7193	1900	9109	6649	2256	10088	7364	2909	9700	7081	3030	9118	6656	3242	8730	6373	3363
	22.0	30	13272	8644	2533	10930	7133	1900	10102	6589	2256	11155	7293	2939	10767	7010	3060	9700	6798	3363	9021	6656	3545
	24.0	32	14183	8644	2570	11675	7133	1924	10765	6589	2281	11931	7293	2939	11446	7010	3091	10088	6939	3454	9215	6869	3666
(1.2+1.8+2.5) + (1.2+1.2+2.5)	12.0	18	11580	7944	2579	8345	6740	1949	7724	6222	2297	8528	6909	2972	8216	6605	3101	7696	6225	3327	7384	5922	3456
	14.0	20	11580	7944	2579	8967	6740	1949	8345	6287	2324	9152	6909	3004	8840	6681	3133	8216	6225	3359	7904	5998	3521
	16.0	22	11580	8453	2619	9588	6740	1975	8878	6287	2351	9776	6909	3036	9464	6681	3198	8840	6225	3424	8528	5998	3553
	18.0	25	12417	9064	2660	10210	7324	2000	9411	6805	2378	10400	7516	3069	9984	7212	3198	9360	6757	3456	8944	6453	3585
	19.0	27	12835	9370	2700	10565	7712	2026	9766	7129	2405	10816	7896	3101	10400	7592	3230	9776	7136	3456	9360	6833	3585
	22.0	30	14230	9268	2700	11719	7648	2026	10831	7064	2405	11960	7820	3133	11544	7516	3262	10400	7288	3585	9672	7136	3779
	24.0	32	15207	9268	2740	12518	7648	2051	11541	7064	2432	12792	7820	3133	12272	7516	3295	10816	7440	3682	9880	7364	3908
(1.2+1.8+2.5) + (1.2+1.2+3.5)	12.0	18	12693	8708	2639	9148	7388	1994	8467	6820	2350	9348	7573	3041	9006	7240	3173	8436	6824	3404	8094	6491	3536
	14.0	20	12693	8708	2639	9829	7388	1994	9148	6891	2378	10032	7573	3074	9690	7323	3206	9006	6824	3437	8664	6574	3602
	16.0	22	12693	9266	2680	10510	7388	2020	9732	6891	2405	10716	7573	3107	10374	7323	3272	9690	6824	3503	9348	6574	3636
	18.0	25	13610	9936	2721	11191	8028	2047	10316	7459	2433	11400	8239	3140	10944	7906	3272	10260	7407	3536	9804	7074	3669
	19.0	27	14069	10271	2763	11581	8454	2073	10705	7815	2461	11856	8655	3173	11400	8322	3305	10716	7823	3536	10260	7490	3669
	22.0	30	15599	10159	2763	12846	8383	2073	11873	7744	2461	13110	8572	3206	12654	8239	3338	11400	7989	3669	10602	7823	3867
	24.0	32	16669	10159	2804	13722	8383	2099	12651	7744	2488	14022	8572	3206	13452	8239	3371	11856	8156	3768	10830	8072	3999
(1.2+1.8+2.5) + (1.2+1.2+5)	12.0	18	13138	9013	3094	9469	7648	2338	8764	7059	2756	9676	7839	3565	9322	7494	3720	8732	7063	3991	8378	6719	4146
	14.0	20	13138	9013	3094	10174	7648	2338	9469	7133	2788	10384	7839	3604	10030	7580	3759	9322	7063	4030	8968	6805	4224
	16.0	22	13138	9591	3142	10879	7648	2369	10073	7133	2820	11092	7839	3643	10738	7580	3836	10030	7063	4108	9676	6805	4263
	18.0	25	14088	10284	3191	11584	8309	2400	10678	7721	2853	11800	8528	3681	11328	8183	3836	10620	7666	4146	10148	7322	4301
	19.0	27	14563	10631	3239	11987	8751	2430	11080	8089	2885	12272	8959	3720	11800	8614	3875	11092	8097	4146	10620	7753	4301
	22.0	30	16146	10515	3239	13297	8677	2430	12289	8015	2885	13570	8872	3759	13098	8528	3914	11800	8269	4301	10974	8097	4534
	24.0	32	17254	10515	3287	14203	8677	2461	13095	8015	2918	14514	8872	3759	13924	8528	3953	12272	8442	4418	11210	8356	4689
(1.2+1.8+2.5) + (1.2+1.8+1.8)	12.0	18	11468	7867	2555	8265	6675	1931	7650	6162	2276	8446	6842	2944	8137	6542	3072	7622	6166	3296	7313	5865	3424
	14.0	20	11468	7867	2555	8881	6675	1931	8265	6226	2302	9064	6842	2976	8755	6617	3104	8137	6166	3328	7828	5940	3488
	16.0	22	11468	8372	2595	9496	6675	1956	8793	6226	2329	9682	6842	3008	9373	6617	3168	8755	6166	3392	8446	5940	3520
	18.0	25	12297	8977	2635	10112	7253	1982	9320	6740	2356	10300	7444	3040	9888	7143	3168	9270	6692	3424	8858	6391	3552
	19.0	27	12712	9280	2675	10463	7638	2007	9672	7061	2383	10712	7820	3072	10300	7519	3200	9682	7068	3424	9270	6767	3552
	22.0	30	14093	9179	2675	11606	7574	2007	10727	6996	2383	11845	7745	3104	11433	7444	3232	10300	7218	3552	9579	7068	3744
	24.0	32	15061	9179	2715	12398	7574	2032	11430	6996	2409	12669	7745	3104	12154	7444	3264	10712	7369	3648	9785	7293	3872
(1.2+1.8+2.5) + (1.2+1.8+2.5)	12.0	18	12248	8402	2842	8827	7129	2148	8170	6581	2532	9020	7307	3275	8690	6986	3418	8140	6585	3667	7810	6263	3809
	14.0	20	12248	8402	2842	9484	7129	2148	8827	6649	2561	9680	7307	3311	9350	7066	3453	8690	6585	3702	8360	6344	3880
	16.0	22	12248	8941	2887	10141	7129	2176	9390	6649	2591	10340	7307	3346	10010	7066	3524	9350	6585	3774	9020	6344	3916
	18.0	25	13133	9587	2931	10799	7746	2205	9954	7198	2621	11000	7950	3382	10560	7629	3524	9900	7147	3809	9460	6826	3952
	19.0	27	13576	9910	2976	11174	8157	2233	10329	7540	2651	11440	8351	3418	11000	8030	3560	10340	7548	3809	9900	7227	3952
	22.0	30	15051	9802	2976	12395	8089	2233	11456	7472	2651	12650	8271	3453	12210	7950	3596	11000	7709	3952	10230	7548	4165
	24.0	32	16084	9802	3020	13240	8089	2261	12207	7472	2680	13530	8271	3453	12980	7950	3631	11440	7869	4058	10450	7789	4308
(1.2+1.8+2.5) + (1.2+1.8+3.5)	12.0	18	13138	9013	3034	9469	7648	2293	8764	7059	2702	9676	7839	3496	9322	7494	3648	8732	7063	3914	8378	6719	4066
	14.0	20	13138	9013	3034	10174	7648	2293	9469	7133	2734	10384	7839	3534	10030	7580	3686	9322	7063	3952	8968	6805	4142
	16.0	22	13138	9591	3081	10879	7648	2323	10073	7133	2766	11092	7839	3572	10738	7580	3762	10030	7063	4028	9676	6805	4180
	18.0	25	14088	10284	3129	11584	8309	2353	10678	7721	2798	11800	8528	3610	11328	8183	3762	10620	7666	4066	10148	7322	4218
	19.0	27	14563	10631	3176	11987	8751	2383	11080	8089	2829	12272	8959	3648	11800	8614	3800	11092	8097	4066	10620	7753	4218
	22.0	30	16146	10515	3176	13297	8677	2383	12289	8015	2829	13570	8872	3686	13098	8528	3838	11800	8269	4218	10974	8097	4446
	24.0	32	17254	10515	3224	14203	8677	2413	13095	8015	2861	14514	8872	3686	13924	8528	3876	12272	8442	4332	11210	8356	4598

	INDOOR		OUTDOOR TEMPERATURE (°CDB)																				
	EWB	EDB	-10			21			27			32			35			40			43		
	°C	°C	TC	SHC	PI	TC	SHC	PI	TC	SHC	PI	TC	SHC	PI	TC	SHC	PI	TC	SHC	PI	TC	SHC	PI
(1.2+1.8+2.5) + (1.2+1.8+5)	12.0	18	13138	9013	3094	9469	7648	2338	8764	7059	2756	9676	7839	3565	9322	7494	3720	8732	7063	3991	8378	6719	4146
	14.0	20	13138	9013	3094	10174	7648	2338	9469	7133	2788	10384	7839	3604	10030	7580	3759	9322	7063	4030	8968	6805	4224
	16.0	22	13138	9591	3142	10879	7648	2369	10073	7133	2820	11092	7839	3643	10738	7580	3836	10030	7063	4108	9676	6805	4263
	18.0	25	14088	10284	3191	11584	8309	2400	10678	7721	2853	11800	8528	3681	11328	8183	3836	10620	7666	4146	10148	7322	4301
	19.0	27	14563	10631	3239	11987	8751	2430	11080	8089	2885	12272	8959	3720	11800	8614	3875	11092	8097	4146	10620	7753	4301
	22.0	30	16146	10515	3239	13297	8677	2430	12289	8015	2885	13570	8872	3759	13098	8528	3914	11800	8269	4301	10974	8097	4534
	24.0	32	17254	10515	3287	14203	8677	2461	13095	8015	2918	14514	8872	3759	13924	8528	3953	12272	8442	4418	11210	8356	4689
(1.2+1.8+2.5) + (1.2+2.5+2.5)	12.0	18	13027	8937	3034	9389	7583	2293	8689	6999	2702	9594	7772	3496	9243	7431	3648	8658	7004	3914	8307	6662	4066
	14.0	20	13027	8937	3034	10088	7583	2293	9389	7072	2734	10296	7772	3534	9945	7516	3686	9243	7004	3952	8892	6747	4142
	16.0	22	13027	9510	3081	10787	7583	2323	9988	7072	2766	10998	7772	3572	10647	7516	3762	9945	7004	4028	9594	6747	4180
	18.0	25	13969	10197	3129	11486	8239	2353	10587	7656	2798	11700	8456	3610	11232	8114	3762	10530	7601	4066	10062	7260	4218
	19.0	27	14440	10541	3176	11885	8676	2383	10987	8020	2829	12168	8883	3648	11700	8541	3800	10998	8029	4066	10530	7687	4218
	22.0	30	16009	10426	3176	13184	8603	2383	12185	7947	2829	13455	8797	3686	12987	8456	3838	11700	8199	4218	10881	8029	4446
	24.0	32	17108	10426	3224	14083	8603	2413	12984	7947	2861	14391	8797	3686	13806	8456	3876	12168	8370	4332	11115	8285	4598
(1.2+1.8+2.5) + (1.2+2.5+3.5)	12.0	18	13138	9013	3094	9469	7648	2338	8764	7059	2756	9676	7839	3565	9322	7494	3720	8732	7063	3991	8378	6719	4146
	14.0	20	13138	9013	3094	10174	7648	2338	9469	7133	2788	10384	7839	3604	10030	7580	3759	9322	7063	4030	8968	6805	4224
	16.0	22	13138	9591	3142	10879	7648	2369	10073	7133	2820	11092	7839	3643	10738	7580	3836	10030	7063	4108	9676	6805	4263
	18.0	25	14088	10284	3191	11584	8309	2400	10678	7721	2853	11800	8528	3681	11328	8183	3836	10620	7666	4146	10148	7322	4301
	19.0	27	14563	10631	3239	11987	8751	2430	11080	8089	2885	12272	8959	3720	11800	8614	3875	11092	8097	4146	10620	7753	4301
	22.0	30	16146	10515	3239	13297	8677	2430	12289	8015	2885	13570	8872	3759	13098	8528	3914	11800	8269	4301	10974	8097	4534
	24.0	32	17254	10515	3287	14203	8677	2461	13095	8015	2918	14514	8872	3759	13924	8528	3953	12272	8442	4418	11210	8356	4689
(1.2+1.8+2.5) + (1.2+3.5+3.5)	12.0	18	13138	9013	3094	9469	7648	2338	8764	7059	2756	9676	7839	3565	9322	7494	3720	8732	7063	3991	8378	6719	4146
	14.0	20	13138	9013	3094	10174	7648	2338	9469	7133	2788	10384	7839	3604	10030	7580	3759	9322	7063	4030	8968	6805	4224
	16.0	22	13138	9591	3142	10879	7648	2369	10073	7133	2820	11092	7839	3643	10738	7580	3836	10030	7063	4108	9676	6805	4263
	18.0	25	14088	10284	3191	11584	8309	2400	10678	7721	2853	11800	8528	3681	11328	8183	3836	10620	7666	4146	10148	7322	4301
	19.0	27	14563	10631	3239	11987	8751	2430	11080	8089	2885	12272	8959	3720	11800	8614	3875	11092	8097	4146	10620	7753	4301
	22.0	30	16146	10515	3239	13297	8677	2430	12289	8015	2885	13570	8872	3759	13098	8528	3914	11800	8269	4301	10974	8097	4534
	24.0	32	17254	10515	3287	14203	8677	2461	13095	8015	2918	14514	8872	3759	13924	8528	3953	12272	8442	4418	11210	8356	4689
(1.2+1.8+2.5) + (1.2+3.5+3.5)	12.0	18	13138	9013	3094	9469	7648	2338	8764	7059	2756	9676	7839	3565	9322	7494	3720	8732	7063	3991	8378	6719	4146
	14.0	20	13138	9013	3094	10174	7648	2338	9469	7133	2788	10384	7839	3604	10030	7580	3759	9322	7063	4030	8968	6805	4224
	16.0	22	13138	9591	3142	10879	7648	2369	10073	7133	2820	11092	7839	3643	10738	7580	3836	10030	7063	4108	9676	6805	4263
	18.0	25	14088	10284	3191	11584	8309	2400	10678	7721	2853	11800	8528	3681	11328	8183	3836	10620	7666	4146	10148	7322	4301
	19.0	27	14563	10631	3239	11987	8751	2430	11080	8089	2885	12272	8959	3720	11800	8614	3875	11092	8097	4146	10620	7753	4301
	22.0	30	16146	10515	3239	13297	8677	2430	12289	8015	2885	13570	8872	3759	13098	8528	3914	11800	8269	4301	10974	8097	4534
	24.0	32	17254	10515	3287	14203	8677	2461	13095	8015	2918	14514	8872	3759	13924	8528	3953	12272	8442	4418	11210	8356	4689
(1.2+1.8+2.5) + (1.8+1.8+1.8)	12.0	18	12136	8326	2842	8747	7064	2148	8095	6521	2532	8938	7241	3275	8611	6923	3418	8066	6525	3667	7739	6206	3809
	14.0	20	12136	8326	2842	9398	7064	2148	8747	6589	2561	9592	7241	3311	9265	7002	3453	8611	6525	3702	8284	6286	3880
	16.0	22	12136	8859	2887	10049	7064	2176	9305	6589	2591	10246	7241	3346	9919	7002	3524	9265	6525	3774	8938	6286	3916
	18.0	25	13014	9500	2931	10701	7676	2205	9863	7132	2621	10900	7877	3382	10464	7559	3524	9810	7082	3809	9374	6763	3952
	19.0	27	13452	9820	2976	11073	8083	2233	10235	7472	2651	11336	8275	3418	10900	7957	3560	10246	7480	3809	9810	7161	3952
	22.0	30	14914	9713	2976	12282	8015	2233	11352	7404	2651	12535	8196	3453	12099	7877	3596	10900	7639	3952	10137	7480	4165
	24.0	32	15938	9713	3020	13120	8015	2261	12096	7404	2680	13407	8196	3453	12862	7877	3631	11336	7798	4058	10355	7718	4308
(1.2+1.8+2.5) + (1.8+1.8+2.5)	12.0	18	12916	8860	3034	9308	7518	2293	8615	6940	2702	9512	7706	3496	9164	7367	3648	8584	6944	3914	8236	6605	4066
	14.0	20	12916	8860	3034	10001	7518	2293	9308	7012	2734	10208	7706	3534	9860	7452	3686	9164	6944	3952	8816	6690	4142
	16.0	22	12916	9428	3081	10695	7518	2323	9902	7012	2766	10904	7706	3572	10556	7452	3762	9860	6944	4028	9512	6690	4180
	18.0	25	13849	10110	3129	11388	8169	2353	10497	7590	2798	11600	8383	3610	11136	8045	3762	10440	7537	4066	9976	7198	4218
	19.0	27	14316	10451	3176	11784	8602	2383	10893	7952	2829	12064	8807	3648	11600	8468	3800	10904	7960	4066	10440	7621	4218
	22.0	30	15872	10337	3176	13071	8530	2383	12081	7879	2829	13340	8722	3686	12876	8383	3838	11600	8129	4218	10788	7960	4446
	24.0	32	16961	10337	3224	13962	8530	2413	12873	7879	2861	14268	8722	3686	13688	8383	3876	12064	8299	4332	11020	8214	4598
(1.2+1.8+2.5) + (1.8+1.8+3.5)	12.0	18	13138	9013	3094	9469	7648	2338	8764	7059	2756	9676	7839	3565	9322	7494	3720	8732	7063	3991	8378	6719	4146
	14.0	20	13138	9013	3094	10174	7648	2338	9469	7133	2788	10384	7839	3604	10030	7580	3759	9322	7063	4030	8968	6805	4224
	16.0	22	13138	9591	3142	10879	7648	2369	10073	7133	2820	11092	7839	3643	10738	7580	3836	10030	7063	4108	9676	6805	4263
	18.0	25	14088	10284	3191	11584	8309	2400	10678	7721	2853	11800	8528	3681	11328	8183	3836	10620	7666	4146	10148	7322	4301
	19.0	27	14563	10631	3239	11987	8751	2430	11080	8089	2885	12272	8959	3720	11800	8614	3875	11092	8097	4146	10620	7753	4301
	22.0	30	16146	10515	3239	13297	8677	2430	12289	8015	2885	13570	8872	3759	13098	8528	3914	11800	8269	4301	10974	8097	4534
	24.0	32	17254	10515	3287	14203	8677	2461	13095	8015	2918	14514	8872	3759	13924	8528	3953	12272	8442	4418	11210	8356	4689

	INDOOR		OUTDOOR TEMPERATURE (°CDB)																				
	EWB	EDB	-10			21			27			32			35			40			43		
	°C	°C	TC	SHC	PI	TC	SHC	PI	TC	SHC	PI	TC	SHC	PI	TC	SHC	PI	TC	SHC	PI	TC	SHC	PI
(1.2+1.8+2.5) + (1.8+1.8+5)	12.0	18	13138	9013	3094	9469	7648	2338	8764	7059	2756	9676	7839	3565	9322	7494	3720	8732	7063	3991	8378	6719	4146
	14.0	20	13138	9013	3094	10174	7648	2338	9469	7133	2788	10384	7839	3604	10030	7580	3759	9322	7063	4030	8968	6805	4224
	16.0	22	13138	9591	3142	10879	7648	2369	10073	7133	2820	11092	7839	3643	10738	7580	3836	10030	7063	4108	9676	6805	4263
	18.0	25	14088	10284	3191	11584	8309	2400	10678	7721	2853	11800	8528	3681	11328	8183	3836	10620	7666	4146	10148	7322	4301
	19.0	27	14563	10631	3239	11987	8751	2430	11080	8089	2885	12272	8959	3720	11800	8614	3875	11092	8097	4146	10620	7753	4301
	22.0	30	16146	10515	3239	13297	8677	2430	12289	8015	2885	13570	8872	3759	13098	8528	3914	11800	8269	4301	10974	8097	4534
	24.0	32	17254	10515	3287	14203	8677	2461	13095	8015	2918	14514	8872	3759	13924	8528	3953	12272	8442	4418	11210	8356	4689
(1.2+1.8+2.5) + (1.8+2.5+2.5)	12.0	18	13138	9013	3094	9469	7648	2338	8764	7059	2756	9676	7839	3565	9322	7494	3720	8732	7063	3991	8378	6719	4146
	14.0	20	13138	9013	3094	10174	7648	2338	9469	7133	2788	10384	7839	3604	10030	7580	3759	9322	7063	4030	8968	6805	4224
	16.0	22	13138	9591	3142	10879	7648	2369	10073	7133	2820	11092	7839	3643	10738	7580	3836	10030	7063	4108	9676	6805	4263
	18.0	25	14088	10284	3191	11584	8309	2400	10678	7721	2853	11800	8528	3681	11328	8183	3836	10620	7666	4146	10148	7322	4301
	19.0	27	14563	10631	3239	11987	8751	2430	11080	8089	2885	12272	8959	3720	11800	8614	3875	11092	8097	4146	10620	7753	4301
	22.0	30	16146	10515	3239	13297	8677	2430	12289	8015	2885	13570	8872	3759	13098	8528	3914	11800	8269	4301	10974	8097	4534
	24.0	32	17254	10515	3287	14203	8677	2461	13095	8015	2918	14514	8872	3759	13924	8528	3953	12272	8442	4418	11210	8356	4689
(1.2+1.8+2.5) + (1.8+2.5+3.5)	12.0	18	13138	9013	3094	9469	7648	2338	8764	7059	2756	9676	7839	3565	9322	7494	3720	8732	7063	3991	8378	6719	4146
	14.0	20	13138	9013	3094	10174	7648	2338	9469	7133	2788	10384	7839	3604	10030	7580	3759	9322	7063	4030	8968	6805	4224
	16.0	22	13138	9591	3142	10879	7648	2369	10073	7133	2820	11092	7839	3643	10738	7580	3836	10030	7063	4108	9676	6805	4263
	18.0	25	14088	10284	3191	11584	8309	2400	10678	7721	2853	11800	8528	3681	11328	8183	3836	10620	7666	4146	10148	7322	4301
	19.0	27	14563	10631	3239	11987	8751	2430	11080	8089	2885	12272	8959	3720	11800	8614	3875	11092	8097	4146	10620	7753	4301
	22.0	30	16146	10515	3239	13297	8677	2430	12289	8015	2885	13570	8872	3759	13098	8528	3914	11800	8269	4301	10974	8097	4534
	24.0	32	17254	10515	3287	14203	8677	2461	13095	8015	2918	14514	8872	3759	13924	8528	3953	12272	8442	4418	11210	8356	4689
(1.2+1.8+2.5) + (1.8+3.5+3.5)	12.0	18	13138	9013	3094	9469	7648	2338	8764	7059	2756	9676	7839	3565	9322	7494	3720	8732	7063	3991	8378	6719	4146
	14.0	20	13138	9013	3094	10174	7648	2338	9469	7133	2788	10384	7839	3604	10030	7580	3759	9322	7063	4030	8968	6805	4224
	16.0	22	13138	9591	3142	10879	7648	2369	10073	7133	2820	11092	7839	3643	10738	7580	3836	10030	7063	4108	9676	6805	4263
	18.0	25	14088	10284	3191	11584	8309	2400	10678	7721	2853	11800	8528	3681	11328	8183	3836	10620	7666	4146	10148	7322	4301
	19.0	27	14563	10631	3239	11987	8751	2430	11080	8089	2885	12272	8959	3720	11800	8614	3875	11092	8097	4146	10620	7753	4301
	22.0	30	16146	10515	3239	13297	8677	2430	12289	8015	2885	13570	8872	3759	13098	8528	3914	11800	8269	4301	10974	8097	4534
	24.0	32	17254	10515	3287	14203	8677	2461	13095	8015	2918	14514	8872	3759	13924	8528	3953	12272	8442	4418	11210	8356	4689
(1.2+1.8+2.5) + (2.5+2.5+2.5)	12.0	18	13138	9013	3094	9469	7648	2338	8764	7059	2756	9676	7839	3565	9322	7494	3720	8732	7063	3991	8378	6719	4146
	14.0	20	13138	9013	3094	10174	7648	2338	9469	7133	2788	10384	7839	3604	10030	7580	3759	9322	7063	4030	8968	6805	4224
	16.0	22	13138	9591	3142	10879	7648	2369	10073	7133	2820	11092	7839	3643	10738	7580	3836	10030	7063	4108	9676	6805	4263
	18.0	25	14088	10284	3191	11584	8309	2400	10678	7721	2853	11800	8528	3681	11328	8183	3836	10620	7666	4146	10148	7322	4301
	19.0	27	14563	10631	3239	11987	8751	2430	11080	8089	2885	12272	8959	3720	11800	8614	3875	11092	8097	4146	10620	7753	4301
	22.0	30	16146	10515	3239	13297	8677	2430	12289	8015	2885	13570	8872	3759	13098	8528	3914	11800	8269	4301	10974	8097	4534
	24.0	32	17254	10515	3287	14203	8677	2461	13095	8015	2918	14514	8872	3759	13924	8528	3953	12272	8442	4418	11210	8356	4689
(1.2+1.8+2.5) + (2.5+2.5+3.5)	12.0	18	13138	9013	3094	9469	7648	2338	8764	7059	2756	9676	7839	3565	9322	7494	3720	8732	7063	3991	8378	6719	4146
	14.0	20	13138	9013	3094	10174	7648	2338	9469	7133	2788	10384	7839	3604	10030	7580	3759	9322	7063	4030	8968	6805	4224
	16.0	22	13138	9591	3142	10879	7648	2369	10073	7133	2820	11092	7839	3643	10738	7580	3836	10030	7063	4108	9676	6805	4263
	18.0	25	14088	10284	3191	11584	8309	2400	10678	7721	2853	11800	8528	3681	11328	8183	3836	10620	7666	4146	10148	7322	4301
	19.0	27	14563	10631	3239	11987	8751	2430	11080	8089	2885	12272	8959	3720	11800	8614	3875	11092	8097	4146	10620	7753	4301
	22.0	30	16146	10515	3239	13297	8677	2430	12289	8015	2885	13570	8872	3759	13098	8528	3914	11800	8269	4301	10974	8097	4534
	24.0	32	17254	10515	3287	14203	8677	2461	13095	8015	2918	14514	8872	3759	13924	8528	3953	12272	8442	4418	11210	8356	4689
(1.2+1.8+3.5) + (1.2+1.2+1.2)	12.0	18	11023	7562	2475	7944	6416	1870	7353	5923	2204	8118	6577	2852	7821	6287	2976	7326	5926	3193	7029	5637	3317
	14.0	20	11023	7562	2475	8536	6416	1870	7944	5984	2230	8712	6577	2883	8415	6360	3007	7821	5926	3224	7524	5709	3379
	16.0	22	11023	8047	2514	9127	6416	1895	8451	5984	2256	9306	6577	2914	9009	6360	3069	8415	5926	3286	8118	5709	3410
	18.0	25	11820	8628	2553	9719	6971	1920	8958	6478	2282	9900	7155	2945	9504	6866	3069	8910	6432	3317	8514	6143	3441
	19.0	27	12218	8919	2591	10057	7342	1944	9296	6786	2308	10296	7516	2976	9900	7227	3100	9306	6793	3317	8910	6504	3441
	22.0	30	13546	8822	2591	11156	7280	1944	10310	6725	2308	11385	7444	3007	10989	7155	3131	9900	6938	3441	9207	6793	3627
	24.0	32	14476	8822	2630	11916	7280	1969	10987	6725	2334	12177	7444	3007	11682	7155	3162	10296	7082	3534	9405	7010	3751

	INDOOR		OUTDOOR TEMPERATURE (°CDB)																				
	EWB	EWB	-10			21			27			32			35			40			43		
	°C	°C	TC	SHC	PI	TC	SHC	PI	TC	SHC	PI	TC	SHC	PI	TC	SHC	PI	TC	SHC	PI	TC	SHC	PI
(1.2+1.8+3.5) + (1.2+1.2+1.8)	12.0	18	11691	8020	2611	8426	6805	1973	7798	6282	2325	8610	6975	3008	8295	6669	3139	7770	6285	3368	7455	5979	3499
	14.0	20	11691	8020	2611	9053	6805	1973	8426	6347	2353	9240	6975	3041	8925	6745	3172	8295	6285	3401	7980	6055	3564
	16.0	22	11691	8534	2652	9680	6805	1999	8963	6347	2380	9870	6975	3074	9555	6745	3237	8925	6285	3466	8610	6055	3597
	18.0	25	12536	9151	2692	10308	7394	2025	9501	6870	2407	10500	7588	3107	10080	7282	3237	9450	6822	3499	9030	6515	3630
	19.0	27	12959	9460	2733	10666	7787	2051	9860	7198	2435	10920	7972	3139	10500	7665	3270	9870	7205	3499	9450	6899	3630
	22.0	30	14367	9357	2733	11832	7721	2051	10935	7132	2435	12075	7895	3172	11655	7588	3303	10500	7358	3630	9765	7205	3826
	24.0	32	15353	9357	2774	12638	7721	2077	11652	7132	2462	12915	7895	3172	12390	7588	3335	10920	7512	3728	9975	7435	3957
(1.2+1.8+3.5) + (1.2+1.2+2.5)	12.0	18	12470	8555	2771	8987	7259	2094	8318	6700	2468	9184	7440	3192	8848	7113	3331	8288	6704	3574	7952	6377	3713
	14.0	20	12470	8555	2771	9657	7259	2094	8987	6770	2497	9856	7440	3227	9520	7195	3366	8848	6704	3609	8512	6459	3782
	16.0	22	12470	9103	2814	10326	7259	2121	9561	6770	2526	10528	7440	3262	10192	7195	3435	9520	6704	3678	9184	6459	3817
	18.0	25	13372	9761	2857	10995	7887	2149	10135	7328	2555	11200	8094	3297	10752	7767	3435	10080	7277	3713	9632	6950	3852
	19.0	27	13822	10090	2900	11378	8306	2176	10517	7677	2584	11648	8503	3331	11200	8176	3470	10528	7685	3713	10080	7358	3852
	22.0	30	15325	9981	2900	12620	8236	2176	11664	7608	2584	12880	8421	3366	12432	8094	3505	11200	7849	3852	10416	7685	4060
	24.0	32	16377	9981	2944	13481	8236	2204	12429	7608	2613	13776	8421	3366	13216	8094	3539	11648	8012	3956	10640	7931	4199
(1.2+1.8+3.5) + (1.2+1.2+3.5)	12.0	18	13584	9319	2830	9790	7907	2139	9061	7299	2521	10004	8104	3261	9638	7748	3403	9028	7303	3651	8662	6947	3793
	14.0	20	13584	9319	2830	10519	7907	2139	9790	7375	2550	10736	8104	3297	10370	7837	3439	9638	7303	3687	9272	7036	3864
	16.0	22	13584	9916	2875	11248	7907	2167	10415	7375	2580	11468	8104	3332	11102	7837	3510	10370	7303	3758	10004	7036	3900
	18.0	25	14566	10633	2919	11977	8591	2195	11040	7983	2610	12200	8817	3368	11712	8461	3510	10980	7926	3793	10492	7570	3935
	19.0	27	15057	10991	2963	12393	9047	2223	11456	8363	2639	12688	9262	3403	12200	8906	3545	11468	8372	3793	10980	8015	3935
	22.0	30	16693	10872	2963	13747	8971	2223	12706	8287	2639	14030	9173	3439	13542	8817	3580	12200	8550	3935	11346	8372	4148
	24.0	32	17839	10872	3007	14685	8971	2252	13539	8287	2669	15006	9173	3439	14396	8817	3616	12688	8728	4041	11590	8639	4289
(1.2+1.8+3.5) + (1.2+1.2+5)	12.0	18	14029	9624	3286	10111	8166	2483	9358	7538	2926	10332	8370	3786	9954	8002	3950	9324	7542	4238	8946	7174	4403
	14.0	20	14029	9624	3286	10864	8166	2483	10111	7616	2961	11088	8370	3827	10710	8094	3992	9954	7542	4280	9576	7266	4485
	16.0	22	14029	10241	3337	11617	8166	2516	10756	7616	2995	11844	8370	3868	11466	8094	4074	10710	7542	4362	10332	7266	4527
	18.0	25	15043	10982	3388	12370	8873	2548	11401	8245	3029	12600	9106	3909	12096	8738	4074	11340	8186	4403	10836	7818	4568
	19.0	27	15550	11352	3440	12800	9344	2581	11832	8637	3064	13104	9566	3950	12600	9198	4115	11844	8646	4403	11340	8278	4568
	22.0	30	17240	11228	3440	14198	9265	2581	13122	8559	3064	14490	9474	3992	13986	9106	4156	12600	8830	4568	11718	8646	4815
	24.0	32	18424	11228	3491	15166	9265	2614	13983	8559	3098	15498	9474	3992	14868	9106	4197	13104	9014	4691	11970	8922	4979
(1.2+1.8+3.5) + (1.2+1.8+1.8)	12.0	18	12359	8479	2747	8907	7194	2076	8244	6641	2446	9102	7374	3165	8769	7050	3302	8214	6644	3543	7881	6320	3681
	14.0	20	12359	8479	2747	9570	7194	2076	8907	6710	2475	9768	7374	3199	9435	7131	3337	8769	6644	3578	8436	6401	3750
	16.0	22	12359	9022	2790	10234	7194	2103	9476	6710	2504	10434	7374	3234	10101	7131	3406	9435	6644	3646	9102	6401	3784
	18.0	25	13252	9674	2832	10897	7816	2130	10044	7263	2533	11100	8022	3268	10656	7698	3406	9990	7212	3681	9546	6888	3818
	19.0	27	13699	10000	2875	11276	8231	2158	10423	7609	2561	11544	8427	3302	11100	8103	3440	10434	7617	3681	9990	7293	3818
	22.0	30	15188	9892	2875	12508	8162	2158	11560	7540	2561	12765	8346	3337	12321	8022	3474	11100	7779	3818	10323	7617	4025
	24.0	32	16230	9892	2918	13361	8162	2185	12318	7540	2590	13653	8346	3337	13098	8022	3509	11544	7941	3922	10545	7860	4162
(1.2+1.8+3.5) + (1.2+1.8+2.5)	12.0	18	13138	9013	3034	9469	7648	2293	8764	7059	2702	9676	7839	3496	9322	7494	3648	8732	7063	3914	8378	6719	4066
	14.0	20	13138	9013	3034	10174	7648	2293	9469	7133	2734	10384	7839	3534	10030	7580	3686	9322	7063	3952	8968	6805	4142
	16.0	22	13138	9591	3081	10879	7648	2323	10073	7133	2766	11092	7839	3572	10738	7580	3762	10030	7063	4028	9676	6805	4180
	18.0	25	14088	10284	3129	11584	8309	2353	10678	7721	2798	11800	8528	3610	11328	8183	3762	10620	7666	4066	10148	7322	4218
	19.0	27	14563	10631	3176	11987	8751	2383	11080	8089	2829	12272	8959	3648	11800	8614	3800	11092	8097	4066	10620	7753	4218
	22.0	30	16146	10515	3176	13297	8677	2383	12289	8015	2829	13570	8872	3686	13098	8528	3838	11800	8269	4218	10974	8097	4446
	24.0	32	17254	10515	3224	14203	8677	2413	13095	8015	2861	14514	8872	3686	13924	8528	3876	12272	8442	4332	11210	8356	4598
(1.2+1.8+3.5) + (1.2+1.8+3.5)	12.0	18	14029	9624	3226	10111	8166	2438	9358	7538	2873	10332	8370	3717	9954	8002	3878	9324	7542	4161	8946	7174	4323
	14.0	20	14029	9624	3226	10864	8166	2438	10111	7616	2907	11088	8370	3757	10710	8094	3919	9954	7542	4202	9576	7266	4404
	16.0	22	14029	10241	3276	11617	8166	2470	10756	7616	2940	11844	8370	3798	11466	8094	4000	10710	7542	4282	10332	7266	4444
	18.0	25	15043	10982	3326	12370	8873	2502	11401	8245	2974	12600	9106	3838	12096	8738	4000	11340	8186	4323	10836	7818	4484
	19.0	27	15550	11352	3377	12800	9344	2534	11832	8637	3008	13104	9566	3878	12600	9198	4040	11844	8646	4323	11340	8278	4484
	22.0	30	17240	11228	3377	14198	9265	2534	13122	8559	3008	14490	9474	3919	13986	9106	4080	12600	8830	4484	11718	8646	4727
	24.0	32	18424	11228	3427	15166	9265	2566	13983	8559	3042	15498	9474	3919	14868	9106	4121	13104	9014	4606	11970	8922	4888

	INDOOR		OUTDOOR TEMPERATURE (°CDB)																				
	EWB	EDB	-10			21			27			32			35			40			43		
	°C	°C	TC	SHC	PI	TC	SHC	PI	TC	SHC	PI	TC	SHC	PI	TC	SHC	PI	TC	SHC	PI	TC	SHC	PI
(1.2+1.8+3.5) + (1.2+1.8+5)	12.0	18	14029	9624	3286	10111	8166	2483	9358	7538	2926	10332	8370	3786	9954	8002	3950	9324	7542	4238	8946	7174	4403
	14.0	20	14029	9624	3286	10864	8166	2483	10111	7616	2961	11088	8370	3827	10710	8094	3992	9954	7542	4280	9576	7266	4485
	16.0	22	14029	10241	3337	11617	8166	2516	10756	7616	2995	11844	8370	3868	11466	8094	4074	10710	7542	4362	10332	7266	4527
	18.0	25	15043	10982	3388	12370	8873	2548	11401	8245	3029	12600	9106	3909	12096	8738	4074	11340	8186	4403	10836	7818	4568
	19.0	27	15550	11352	3440	12800	9344	2581	11832	8637	3064	13104	9566	3950	12600	9198	4115	11844	8646	4403	11340	8278	4568
	22.0	30	17240	11228	3440	14198	9265	2581	13122	8559	3064	14490	9474	3992	13986	9106	4156	12600	8830	4568	11718	8646	4815
	24.0	32	18424	11228	3491	15166	9265	2614	13983	8559	3098	15498	9474	3992	14868	9106	4197	13104	9014	4691	11970	8922	4979
(1.2+1.8+3.5) + (1.2+2.5+2.5)	12.0	18	13918	9548	3226	10030	8101	2438	9284	7478	2873	10250	8304	3717	9875	7939	3878	9250	7483	4161	8875	7118	4323
	14.0	20	13918	9548	3226	10777	8101	2438	10030	7556	2907	11000	8304	3757	10625	8030	3919	9875	7483	4202	9500	7209	4404
	16.0	22	13918	10160	3276	11524	8101	2470	10671	7556	2940	11750	8304	3798	11375	8030	4000	10625	7483	4282	10250	7209	4444
	18.0	25	14924	10894	3326	12271	8802	2502	11311	8179	2974	12500	9034	3838	12000	8669	4000	11250	8121	4323	10750	7756	4484
	19.0	27	15427	11262	3377	12698	9270	2534	11738	8569	3008	13000	9490	3878	12500	9125	4040	11750	8578	4323	11250	8213	4484
	22.0	30	17104	11139	3377	14085	9192	2534	13018	8491	3008	14375	9399	3919	13875	9034	4080	12500	8760	4484	11625	8578	4727
	24.0	32	18277	11139	3427	15046	9192	2566	13872	8491	3042	15375	9399	3919	14750	9034	4121	13000	8943	4606	11875	8851	4888
(1.2+1.8+3.5) + (1.2+2.5+3.5)	12.0	18	14029	9624	3286	10111	8166	2483	9358	7538	2926	10332	8370	3786	9954	8002	3950	9324	7542	4238	8946	7174	4403
	14.0	20	14029	9624	3286	10864	8166	2483	10111	7616	2961	11088	8370	3827	10710	8094	3992	9954	7542	4280	9576	7266	4485
	16.0	22	14029	10241	3337	11617	8166	2516	10756	7616	2995	11844	8370	3868	11466	8094	4074	10710	7542	4362	10332	7266	4527
	18.0	25	15043	10982	3388	12370	8873	2548	11401	8245	3029	12600	9106	3909	12096	8738	4074	11340	8186	4403	10836	7818	4568
	19.0	27	15550	11352	3440	12800	9344	2581	11832	8637	3064	13104	9566	3950	12600	9198	4115	11844	8646	4403	11340	8278	4568
	22.0	30	17240	11228	3440	14198	9265	2581	13122	8559	3064	14490	9474	3992	13986	9106	4156	12600	8830	4568	11718	8646	4815
	24.0	32	18424	11228	3491	15166	9265	2614	13983	8559	3098	15498	9474	3992	14868	9106	4197	13104	9014	4691	11970	8922	4979
(1.2+1.8+3.5) + (1.2+3.5+3.5)	12.0	18	14029	9624	3286	10111	8166	2483	9358	7538	2926	10332	8370	3786	9954	8002	3950	9324	7542	4238	8946	7174	4403
	14.0	20	14029	9624	3286	10864	8166	2483	10111	7616	2961	11088	8370	3827	10710	8094	3992	9954	7542	4280	9576	7266	4485
	16.0	22	14029	10241	3337	11617	8166	2516	10756	7616	2995	11844	8370	3868	11466	8094	4074	10710	7542	4362	10332	7266	4527
	18.0	25	15043	10982	3388	12370	8873	2548	11401	8245	3029	12600	9106	3909	12096	8738	4074	11340	8186	4403	10836	7818	4568
	19.0	27	15550	11352	3440	12800	9344	2581	11832	8637	3064	13104	9566	3950	12600	9198	4115	11844	8646	4403	11340	8278	4568
	22.0	30	17240	11228	3440	14198	9265	2581	13122	8559	3064	14490	9474	3992	13986	9106	4156	12600	8830	4568	11718	8646	4815
	24.0	32	18424	11228	3491	15166	9265	2614	13983	8559	3098	15498	9474	3992	14868	9106	4197	13104	9014	4691	11970	8922	4979
(1.2+1.8+3.5) + (1.8+1.8+1.8)	12.0	18	13027	8937	3034	9389	7583	2293	8689	6999	2702	9594	7772	3496	9243	7431	3648	8658	7004	3914	8307	6662	4066
	14.0	20	13027	8937	3034	10088	7583	2293	9389	7072	2734	10296	7772	3534	9945	7516	3686	9243	7004	3952	8892	6747	4142
	16.0	22	13027	9510	3081	10787	7583	2323	9988	7072	2766	10998	7772	3572	10647	7516	3762	9945	7004	4028	9594	6747	4180
	18.0	25	13969	10197	3129	11486	8239	2353	10587	7656	2798	11700	8456	3610	11232	8114	3762	10530	7601	4066	10062	7260	4218
	19.0	27	14440	10541	3176	11885	8676	2383	10987	8020	2829	12168	8883	3648	11700	8541	3800	10998	8029	4066	10530	7687	4218
	22.0	30	16009	10426	3176	13184	8603	2383	12185	7947	2829	13455	8797	3686	12987	8456	3838	11700	8199	4218	10881	8029	4446
	24.0	32	17108	10426	3224	14083	8603	2413	12984	7947	2861	14391	8797	3686	13806	8456	3876	12168	8370	4332	11115	8285	4598
(1.2+1.8+3.5) + (1.8+1.8+2.5)	12.0	18	13806	9471	3226	9950	8036	2438	9209	7418	2873	10168	8237	3717	9796	7875	3878	9176	7423	4161	8804	7061	4323
	14.0	20	13806	9471	3226	10691	8036	2438	9950	7495	2907	10912	8237	3757	10540	7966	3919	9796	7423	4202	9424	7151	4404
	16.0	22	13806	10079	3276	11432	8036	2470	10585	7495	2940	11656	8237	3798	11284	7966	4000	10540	7423	4282	10168	7151	4444
	18.0	25	14804	10807	3326	12173	8732	2502	11220	8114	2974	12400	8961	3838	11904	8599	4000	11160	8056	4323	10664	7694	4484
	19.0	27	15303	11171	3377	12597	9196	2534	11644	8500	3008	12896	9414	3878	12400	9052	4040	11656	8509	4323	11160	8147	4484
	22.0	30	16967	11050	3377	13973	9118	2534	12914	8423	3008	14260	9324	3919	13764	8961	4080	12400	8690	4484	11532	8509	4727
	24.0	32	18131	11050	3427	14925	9118	2566	13761	8423	3042	15252	9324	3919	14632	8961	4121	12896	8871	4606	11780	8780	4888
(1.2+1.8+3.5) + (1.8+1.8+3.5)	12.0	18	14029	9624	3286	10111	8166	2483	9358	7538	2926	10332	8370	3786	9954	8002	3950	9324	7542	4238	8946	7174	4403
	14.0	20	14029	9624	3286	10864	8166	2483	10111	7616	2961	11088	8370	3827	10710	8094	3992	9954	7542	4280	9576	7266	4485
	16.0	22	14029	10241	3337	11617	8166	2516	10756	7616	2995	11844	8370	3868	11466	8094	4074	10710	7542	4362	10332	7266	4527
	18.0	25	15043	10982	3388	12370	8873	2548	11401	8245	3029	12600	9106	3909	12096	8738	4074	11340	8186	4403	10836	7818	4568
	19.0	27	15550	11352	3440	12800	9344	2581	11832	8637	3064	13104	9566	3950	12600	9198	4115	11844	8646	4403	11340	8278	4568
	22.0	30	17240	11228	3440	14198	9265	2581	13122	8559	3064	14490	9474	3992	13986	9106	4156	12600	8830	4568	11718	8646	4815
	24.0	32	18424	11228	3491	15166	9265	2614	13983	8559	3098	15498	9474	3992	14868	9106	4197	13104	9014	4691	11970	8922	4979

	INDOOR		OUTDOOR TEMPERATURE (°CDB)																				
	EWB	EDB	-10			21			27			32			35			40			43		
	°C	°C	TC	SHC	PI	TC	SHC	PI	TC	SHC	PI	TC	SHC	PI	TC	SHC	PI	TC	SHC	PI	TC	SHC	PI
(1.2+1.8+3.5) + (1.8+1.8+5)	12.0	18	14029	9624	3286	10111	8166	2483	9358	7538	2926	10332	8370	3786	9954	8002	3950	9324	7542	4238	8946	7174	4403
	14.0	20	14029	9624	3286	10864	8166	2483	10111	7616	2961	11088	8370	3827	10710	8094	3992	9954	7542	4280	9576	7266	4485
	16.0	22	14029	10241	3337	11617	8166	2516	10756	7616	2995	11844	8370	3868	11466	8094	4074	10710	7542	4362	10332	7266	4527
	18.0	25	15043	10982	3388	12370	8873	2548	11401	8245	3029	12600	9106	3909	12096	8738	4074	11340	8186	4403	10836	7818	4568
	19.0	27	15550	11352	3440	12800	9344	2581	11832	8637	3064	13104	9566	3950	12600	9198	4115	11844	8646	4403	11340	8278	4568
	22.0	30	17240	11228	3440	14198	9265	2581	13122	8559	3064	14490	9474	3992	13986	9106	4156	12600	8830	4568	11718	8646	4815
	24.0	32	18424	11228	3491	15166	9265	2614	13983	8559	3098	15498	9474	3992	14868	9106	4197	13104	9014	4691	11970	8922	4979
(1.2+1.8+3.5) + (1.8+2.5+2.5)	12.0	18	14029	9624	3286	10111	8166	2483	9358	7538	2926	10332	8370	3786	9954	8002	3950	9324	7542	4238	8946	7174	4403
	14.0	20	14029	9624	3286	10864	8166	2483	10111	7616	2961	11088	8370	3827	10710	8094	3992	9954	7542	4280	9576	7266	4485
	16.0	22	14029	10241	3337	11617	8166	2516	10756	7616	2995	11844	8370	3868	11466	8094	4074	10710	7542	4362	10332	7266	4527
	18.0	25	15043	10982	3388	12370	8873	2548	11401	8245	3029	12600	9106	3909	12096	8738	4074	11340	8186	4403	10836	7818	4568
	19.0	27	15550	11352	3440	12800	9344	2581	11832	8637	3064	13104	9566	3950	12600	9198	4115	11844	8646	4403	11340	8278	4568
	22.0	30	17240	11228	3440	14198	9265	2581	13122	8559	3064	14490	9474	3992	13986	9106	4156	12600	8830	4568	11718	8646	4815
	24.0	32	18424	11228	3491	15166	9265	2614	13983	8559	3098	15498	9474	3992	14868	9106	4197	13104	9014	4691	11970	8922	4979
(1.2+1.8+3.5) + (1.8+2.5+3.5)	12.0	18	14029	9624	3286	10111	8166	2483	9358	7538	2926	10332	8370	3786	9954	8002	3950	9324	7542	4238	8946	7174	4403
	14.0	20	14029	9624	3286	10864	8166	2483	10111	7616	2961	11088	8370	3827	10710	8094	3992	9954	7542	4280	9576	7266	4485
	16.0	22	14029	10241	3337	11617	8166	2516	10756	7616	2995	11844	8370	3868	11466	8094	4074	10710	7542	4362	10332	7266	4527
	18.0	25	15043	10982	3388	12370	8873	2548	11401	8245	3029	12600	9106	3909	12096	8738	4074	11340	8186	4403	10836	7818	4568
	19.0	27	15550	11352	3440	12800	9344	2581	11832	8637	3064	13104	9566	3950	12600	9198	4115	11844	8646	4403	11340	8278	4568
	22.0	30	17240	11228	3440	14198	9265	2581	13122	8559	3064	14490	9474	3992	13986	9106	4156	12600	8830	4568	11718	8646	4815
	24.0	32	18424	11228	3491	15166	9265	2614	13983	8559	3098	15498	9474	3992	14868	9106	4197	13104	9014	4691	11970	8922	4979
(1.2+1.8+3.5) + (1.8+3.5+3.5)	12.0	18	14029	9624	3286	10111	8166	2483	9358	7538	2926	10332	8370	3786	9954	8002	3950	9324	7542	4238	8946	7174	4403
	14.0	20	14029	9624	3286	10864	8166	2483	10111	7616	2961	11088	8370	3827	10710	8094	3992	9954	7542	4280	9576	7266	4485
	16.0	22	14029	10241	3337	11617	8166	2516	10756	7616	2995	11844	8370	3868	11466	8094	4074	10710	7542	4362	10332	7266	4527
	18.0	25	15043	10982	3388	12370	8873	2548	11401	8245	3029	12600	9106	3909	12096	8738	4074	11340	8186	4403	10836	7818	4568
	19.0	27	15550	11352	3440	12800	9344	2581	11832	8637	3064	13104	9566	3950	12600	9198	4115	11844	8646	4403	11340	8278	4568
	22.0	30	17240	11228	3440	14198	9265	2581	13122	8559	3064	14490	9474	3992	13986	9106	4156	12600	8830	4568	11718	8646	4815
	24.0	32	18424	11228	3491	15166	9265	2614	13983	8559	3098	15498	9474	3992	14868	9106	4197	13104	9014	4691	11970	8922	4979
(1.2+1.8+3.5) + (2.5+2.5+2.5)	12.0	18	14029	9624	3286	10111	8166	2483	9358	7538	2926	10332	8370	3786	9954	8002	3950	9324	7542	4238	8946	7174	4403
	14.0	20	14029	9624	3286	10864	8166	2483	10111	7616	2961	11088	8370	3827	10710	8094	3992	9954	7542	4280	9576	7266	4485
	16.0	22	14029	10241	3337	11617	8166	2516	10756	7616	2995	11844	8370	3868	11466	8094	4074	10710	7542	4362	10332	7266	4527
	18.0	25	15043	10982	3388	12370	8873	2548	11401	8245	3029	12600	9106	3909	12096	8738	4074	11340	8186	4403	10836	7818	4568
	19.0	27	15550	11352	3440	12800	9344	2581	11832	8637	3064	13104	9566	3950	12600	9198	4115	11844	8646	4403	11340	8278	4568
	22.0	30	17240	11228	3440	14198	9265	2581	13122	8559	3064	14490	9474	3992	13986	9106	4156	12600	8830	4568	11718	8646	4815
	24.0	32	18424	11228	3491	15166	9265	2614	13983	8559	3098	15498	9474	3992	14868	9106	4197	13104	9014	4691	11970	8922	4979
(1.2+1.8+3.5) + (2.5+2.5+3.5)	12.0	18	14029	9624	3286	10111	8166	2483	9358	7538	2926	10332	8370	3786	9954	8002	3950	9324	7542	4238	8946	7174	4403
	14.0	20	14029	9624	3286	10864	8166	2483	10111	7616	2961	11088	8370	3827	10710	8094	3992	9954	7542	4280	9576	7266	4485
	16.0	22	14029	10241	3337	11617	8166	2516	10756	7616	2995	11844	8370	3868	11466	8094	4074	10710	7542	4362	10332	7266	4527
	18.0	25	15043	10982	3388	12370	8873	2548	11401	8245	3029	12600	9106	3909	12096	8738	4074	11340	8186	4403	10836	7818	4568
	19.0	27	15550	11352	3440	12800	9344	2581	11832	8637	3064	13104	9566	3950	12600	9198	4115	11844	8646	4403	11340	8278	4568
	22.0	30	17240	11228	3440	14198	9265	2581	13122	8559	3064	14490	9474	3992	13986	9106	4156	12600	8830	4568	11718	8646	4815
	24.0	32	18424	11228	3491	15166	9265	2614	13983	8559	3098	15498	9474	3992	14868	9106	4197	13104	9014	4691	11970	8922	4979
(1.2+1.8+5) + (1.2+1.2+1.2)	12.0	18	11023	7562	2535	7944	6416	1916	7353	5923	2258	8118	6577	2921	7821	6287	3048	7326	5926	3270	7029	5637	3397
	14.0	20	11023	7562	2535	8536	6416	1916	7944	5984	2284	8712	6577	2953	8415	6360	3080	7821	5926	3302	7524	5709	3461
	16.0	22	11023	8047	2575	9127	6416	1941	8451	5984	2311	9306	6577	2985	9009	6360	3143	8415	5926	3366	8118	5709	3493
	18.0	25	11820	8628	2614	9719	6971	1966	8958	6478	2337	9900	7155	3016	9504	6866	3143	8910	6432	3397	8514	6143	3524
	19.0	27	12218	8919	2654	10057	7342	1991	9296	6786	2364	10296	7516	3048	9900	7227	3175	9306	6793	3397	8910	6504	3524
	22.0	30	13546	8822	2654	11156	7280	1991	10310	6725	2364	11385	7444	3080	10989	7155	3207	9900	6938	3524	9207	6793	3715
	24.0	32	14476	8822	2693	11916	7280	2017	10987	6725	2391	12177	7444	3080	11682	7155	3239	10296	7082	3620	9405	7010	3842

	INDOOR		OUTDOOR TEMPERATURE (°CDB)																				
	EWB	EDB	-10			21			27			32			35			40			43		
	°C	°C	TC	SHC	PI	TC	SHC	PI	TC	SHC	PI	TC	SHC	PI	TC	SHC	PI	TC	SHC	PI	TC	SHC	PI
(1.2+1.8+5) + (1.2+1.2+1.8)	12.0	18	11691	8020	2671	8426	6805	2018	7798	6282	2379	8610	6975	3077	8295	6669	3211	7770	6285	3445	7455	5979	3579
	14.0	20	11691	8020	2671	9053	6805	2018	8426	6347	2407	9240	6975	3111	8925	6745	3245	8295	6285	3479	7980	6055	3646
	16.0	22	11691	8534	2713	9680	6805	2045	8963	6347	2435	9870	6975	3144	9555	6745	3312	8925	6285	3546	8610	6055	3680
	18.0	25	12536	9151	2754	10308	7394	2071	9501	6870	2463	10500	7588	3178	10080	7282	3312	9450	6822	3579	9030	6515	3713
	19.0	27	12959	9460	2796	10666	7787	2098	9860	7198	2491	10920	7972	3211	10500	7665	3345	9870	7205	3579	9450	6899	3713
	22.0	30	14367	9357	2796	11832	7721	2098	10935	7132	2491	12075	7895	3245	11655	7588	3378	10500	7358	3713	9765	7205	3914
	24.0	32	15353	9357	2838	12638	7721	2124	11652	7132	2519	12915	7895	3245	12390	7588	3412	10920	7512	3813	9975	7435	4047
(1.2+1.8+5) + (1.2+1.2+2.5)	12.0	18	12470	8555	2830	8987	7259	2139	8318	6700	2521	9184	7440	3261	8848	7113	3403	8288	6704	3651	7952	6377	3793
	14.0	20	12470	8555	2830	9657	7259	2139	8987	6770	2550	9856	7440	3297	9520	7195	3439	8848	6704	3687	8512	6459	3864
	16.0	22	12470	9103	2875	10326	7259	2167	9561	6770	2580	10528	7440	3332	10192	7195	3510	9520	6704	3758	9184	6459	3900
	18.0	25	13372	9761	2919	10995	7887	2195	10135	7328	2610	11200	8094	3368	10752	7767	3510	10080	7277	3793	9632	6950	3935
	19.0	27	13822	10090	2963	11378	8306	2223	10517	7677	2639	11648	8503	3403	11200	8176	3545	10528	7685	3793	10080	7358	3935
	22.0	30	15325	9981	2963	12620	8236	2223	11664	7608	2639	12880	8421	3439	12432	8094	3580	11200	7849	3935	10416	7685	4148
	24.0	32	16377	9981	3007	13481	8236	2252	12429	7608	2669	13776	8421	3439	13216	8094	3616	11648	8012	4041	10640	7931	4289
(1.2+1.8+5) + (1.2+1.2+3.5)	12.0	18	13584	9319	2890	9790	7907	2184	9061	7299	2574	10004	8104	3330	9638	7748	3475	9028	7303	3729	8662	6947	3873
	14.0	20	13584	9319	2890	10519	7907	2184	9790	7375	2604	10736	8104	3367	10370	7837	3511	9638	7303	3765	9272	7036	3946
	16.0	22	13584	9916	2936	11248	7907	2213	10415	7375	2635	11468	8104	3403	11102	7837	3584	10370	7303	3837	10004	7036	3982
	18.0	25	14566	10633	2981	11977	8591	2242	11040	7983	2665	12200	8817	3439	11712	8461	3584	10980	7926	3873	10492	7570	4018
	19.0	27	15057	10991	3026	12393	9047	2270	11456	8363	2695	12688	9262	3475	12200	8906	3620	11468	8372	3873	10980	8015	4018
	22.0	30	16693	10872	3026	13747	8971	2270	12706	8287	2695	14030	9173	3511	13542	8817	3656	12200	8550	4018	11346	8372	4235
	24.0	32	17839	10872	3071	14685	8971	2299	13539	8287	2726	15006	9173	3511	14396	8817	3692	12688	8728	4127	11590	8639	4380
(1.2+1.8+5) + (1.2+1.2+5)	12.0	18	14029	9624	3345	10111	8166	2528	9358	7538	2979	10332	8370	3855	9954	8002	4022	9324	7542	4316	8946	7174	4483
	14.0	20	14029	9624	3345	10864	8166	2528	10111	7616	3015	11088	8370	3897	10710	8094	4064	9954	7542	4358	9576	7266	4567
	16.0	22	14029	10241	3398	11617	8166	2561	10756	7616	3050	11844	8370	3939	11466	8094	4148	10710	7542	4441	10332	7266	4609
	18.0	25	15043	10982	3450	12370	8873	2595	11401	8245	3085	12600	9106	3981	12096	8738	4148	11340	8186	4483	10836	7818	4651
	19.0	27	15550	11352	3502	12800	9344	2628	11832	8637	3120	13104	9566	4022	12600	9198	4190	11844	8646	4483	11340	8278	4651
	22.0	30	17240	11228	3502	14198	9265	2628	13122	8559	3120	14490	9474	4064	13986	9106	4232	12600	8830	4651	11718	8646	4902
	24.0	32	18424	11228	3555	15166	9265	2661	13983	8559	3155	15498	9474	4064	14868	9106	4274	13104	9014	4777	11970	8922	5070
(1.2+1.8+5) + (1.2+1.8+1.8)	12.0	18	12359	8479	2807	8907	7194	2121	8244	6641	2500	9102	7374	3234	8769	7050	3374	8214	6644	3620	7881	6320	3761
	14.0	20	12359	8479	2807	9570	7194	2121	8907	6710	2529	9768	7374	3269	9435	7131	3410	8769	6644	3656	8436	6401	3831
	16.0	22	12359	9022	2850	10234	7194	2149	9476	6710	2558	10434	7374	3304	10101	7131	3480	9435	6644	3726	9102	6401	3867
	18.0	25	13252	9674	2894	10897	7816	2177	10044	7263	2588	11100	8022	3339	10656	7698	3480	9990	7212	3761	9546	6888	3902
	19.0	27	13699	10000	2938	11276	8231	2205	10423	7609	2617	11544	8427	3374	11100	8103	3515	10434	7617	3761	9990	7293	3902
	22.0	30	15188	9892	2938	12508	8162	2205	11560	7540	2617	12765	8346	3410	12321	8022	3550	11100	7779	3902	10323	7617	4113
	24.0	32	16230	9892	2982	13361	8162	2232	12318	7540	2647	13653	8346	3410	13098	8022	3585	11544	7941	4007	10545	7860	4253
(1.2+1.8+5) + (1.2+1.8+2.5)	12.0	18	13138	9013	3094	9469	7648	2338	8764	7059	2756	9676	7839	3565	9322	7494	3720	8732	7063	3991	8378	6719	4146
	14.0	20	13138	9013	3094	10174	7648	2338	9469	7133	2788	10384	7839	3604	10030	7580	3759	9322	7063	4030	8968	6805	4224
	16.0	22	13138	9591	3142	10879	7648	2369	10073	7133	2820	11092	7839	3643	10738	7580	3836	10030	7063	4108	9676	6805	4263
	18.0	25	14088	10284	3191	11584	8309	2400	10678	7721	2853	11800	8528	3681	11328	8183	3836	10620	7666	4146	10148	7322	4301
	19.0	27	14563	10631	3239	11987	8751	2430	11080	8089	2885	12272	8959	3720	11800	8614	3875	11092	8097	4146	10620	7753	4301
	22.0	30	16146	10515	3239	13297	8677	2430	12289	8015	2885	13570	8872	3759	13098	8528	3914	11800	8269	4301	10974	8097	4534
	24.0	32	17254	10515	3287	14203	8677	2461	13095	8015	2918	14514	8872	3759	13924	8528	3953	12272	8442	4418	11210	8356	4689
(1.2+1.8+5) + (1.2+1.8+3.5)	12.0	18	14029	9624	3286	10111	8166	2483	9358	7538	2926	10332	8370	3786	9954	8002	3950	9324	7542	4238	8946	7174	4403
	14.0	20	14029	9624	3286	10864	8166	2483	10111	7616	2961	11088	8370	3827	10710	8094	3992	9954	7542	4280	9576	7266	4485
	16.0	22	14029	10241	3337	11617	8166	2516	10756	7616	2995	11844	8370	3868	11466	8094	4074	10710	7542	4362	10332	7266	4527
	18.0	25	15043	10982	3388	12370	8873	2548	11401	8245	3029	12600	9106	3909	12096	8738	4074	11340	8186	4403	10836	7818	4568
	19.0	27	15550	11352	3440	12800	9344	2581	11832	8637	3064	13104	9566	3950	12600	9198	4115	11844	8646	4403	11340	8278	4568
	22.0	30	17240	11228	3440	14198	9265	2581	13122	8559	3064	14490	9474	3992	13986	9106	4156	12600	8830	4568	11718	8646	4815
	24.0	32	18424	11228	3491	15166	9265	2614	13983	8559	3098	15498	9474	3992	14868	9106	4197	13104	9014	4691	11970	8922	4979

	INDOOR		OUTDOOR TEMPERATURE (°CDB)																				
	EWB	EDB	-10			21			27			32			35			40			43		
	°C	°C	TC	SHC	PI	TC	SHC	PI	TC	SHC	PI	TC	SHC	PI	TC	SHC	PI	TC	SHC	PI	TC	SHC	PI
(1.2+1.8+5) + (1.2+1.8+5)	12.0	18	14029	9624	3345	10111	8166	2528	9358	7538	2979	10332	8370	3855	9954	8002	4022	9324	7542	4316	8946	7174	4483
	14.0	20	14029	9624	3345	10864	8166	2528	10111	7616	3015	11088	8370	3897	10710	8094	4064	9954	7542	4358	9576	7266	4567
	16.0	22	14029	10241	3398	11617	8166	2561	10756	7616	3050	11844	8370	3939	11466	8094	4148	10710	7542	4441	10332	7266	4609
	18.0	25	15043	10982	3450	12370	8873	2595	11401	8245	3085	12600	9106	3981	12096	8738	4148	11340	8186	4483	10836	7818	4651
	19.0	27	15550	11352	3502	12800	9344	2628	11832	8637	3120	13104	9566	4022	12600	9198	4190	11844	8646	4483	11340	8278	4651
	22.0	30	17240	11228	3502	14198	9265	2628	13122	8559	3120	14490	9474	4064	13986	9106	4232	12600	8830	4651	11718	8646	4902
	24.0	32	18424	11228	3555	15166	9265	2661	13983	8559	3155	15498	9474	4064	14868	9106	4274	13104	9014	4777	11970	8922	5070
(1.2+1.8+5) + (1.2+2.5+2.5)	12.0	18	13918	9548	3286	10030	8101	2483	9284	7478	2926	10250	8304	3786	9875	7939	3950	9250	7483	4238	8875	7118	4403
	14.0	20	13918	9548	3286	10777	8101	2483	10030	7556	2961	11000	8304	3827	10625	8030	3992	9875	7483	4280	9500	7209	4485
	16.0	22	13918	10160	3337	11524	8101	2516	10671	7556	2995	11750	8304	3868	11375	8030	4074	10625	7483	4362	10250	7209	4527
	18.0	25	14924	10894	3388	12271	8802	2548	11311	8179	3029	12500	9034	3909	12000	8669	4074	11250	8121	4403	10750	7756	4568
	19.0	27	15427	11262	3440	12698	9270	2581	11738	8569	3064	13000	9490	3950	12500	9125	4115	11750	8578	4403	11250	8213	4568
	22.0	30	17104	11139	3440	14085	9192	2581	13018	8491	3064	14375	9399	3992	13875	9034	4156	12500	8760	4568	11625	8578	4815
	24.0	32	18277	11139	3491	15046	9192	2614	13872	8491	3098	15375	9399	3992	14750	9034	4197	13000	8943	4691	11875	8851	4979
(1.2+1.8+5) + (1.2+2.5+3.5)	12.0	18	14029	9624	3345	10111	8166	2528	9358	7538	2979	10332	8370	3855	9954	8002	4022	9324	7542	4316	8946	7174	4483
	14.0	20	14029	9624	3345	10864	8166	2528	10111	7616	3015	11088	8370	3897	10710	8094	4064	9954	7542	4358	9576	7266	4567
	16.0	22	14029	10241	3398	11617	8166	2561	10756	7616	3050	11844	8370	3939	11466	8094	4148	10710	7542	4441	10332	7266	4609
	18.0	25	15043	10982	3450	12370	8873	2595	11401	8245	3085	12600	9106	3981	12096	8738	4148	11340	8186	4483	10836	7818	4651
	19.0	27	15550	11352	3502	12800	9344	2628	11832	8637	3120	13104	9566	4022	12600	9198	4190	11844	8646	4483	11340	8278	4651
	22.0	30	17240	11228	3502	14198	9265	2628	13122	8559	3120	14490	9474	4064	13986	9106	4232	12600	8830	4651	11718	8646	4902
	24.0	32	18424	11228	3555	15166	9265	2661	13983	8559	3155	15498	9474	4064	14868	9106	4274	13104	9014	4777	11970	8922	5070
(1.2+1.8+5) + (1.2+3.5+3.5)	12.0	18	14029	9624	3345	10111	8166	2528	9358	7538	2979	10332	8370	3855	9954	8002	4022	9324	7542	4316	8946	7174	4483
	14.0	20	14029	9624	3345	10864	8166	2528	10111	7616	3015	11088	8370	3897	10710	8094	4064	9954	7542	4358	9576	7266	4567
	16.0	22	14029	10241	3398	11617	8166	2561	10756	7616	3050	11844	8370	3939	11466	8094	4148	10710	7542	4441	10332	7266	4609
	18.0	25	15043	10982	3450	12370	8873	2595	11401	8245	3085	12600	9106	3981	12096	8738	4148	11340	8186	4483	10836	7818	4651
	19.0	27	15550	11352	3502	12800	9344	2628	11832	8637	3120	13104	9566	4022	12600	9198	4190	11844	8646	4483	11340	8278	4651
	22.0	30	17240	11228	3502	14198	9265	2628	13122	8559	3120	14490	9474	4064	13986	9106	4232	12600	8830	4651	11718	8646	4902
	24.0	32	18424	11228	3555	15166	9265	2661	13983	8559	3155	15498	9474	4064	14868	9106	4274	13104	9014	4777	11970	8922	5070
(1.2+1.8+5) + (1.8+1.8+1.8)	12.0	18	13027	8937	3094	9389	7583	2338	8689	6999	2756	9594	7772	3565	9243	7431	3720	8658	7004	3991	8307	6662	4146
	14.0	20	13027	8937	3094	10088	7583	2338	9389	7072	2788	10296	7772	3604	9945	7516	3759	9243	7004	4030	8892	6747	4224
	16.0	22	13027	9510	3142	10787	7583	2369	9988	7072	2820	10998	7772	3643	10647	7516	3836	9945	7004	4108	9594	6747	4263
	18.0	25	13969	10197	3191	11486	8239	2400	10587	7656	2853	11700	8456	3681	11232	8114	3836	10530	7601	4146	10062	7260	4301
	19.0	27	14440	10541	3239	11885	8676	2430	10987	8020	2885	12168	8883	3720	11700	8541	3875	10998	8029	4146	10530	7687	4301
	22.0	30	16009	10426	3239	13184	8603	2430	12185	7947	2885	13455	8797	3759	12987	8456	3914	11700	8199	4301	10881	8029	4534
	24.0	32	17108	10426	3287	14083	8603	2461	12984	7947	2918	14391	8797	3759	13806	8456	3953	12168	8370	4418	11115	8285	4689
(1.2+1.8+5) + (1.8+1.8+2.5)	12.0	18	13806	9471	3286	9950	8036	2483	9209	7418	2926	10168	8237	3786	9796	7875	3950	9176	7423	4238	8804	7061	4403
	14.0	20	13806	9471	3286	10691	8036	2483	9950	7495	2961	10912	8237	3827	10540	7966	3992	9796	7423	4280	9424	7151	4485
	16.0	22	13806	10079	3337	11432	8036	2516	10585	7495	2995	11656	8237	3868	11284	7966	4074	10540	7423	4362	10168	7151	4527
	18.0	25	14804	10807	3388	12173	8732	2548	11220	8114	3029	12400	8961	3909	11904	8599	4074	11160	8056	4403	10664	7694	4568
	19.0	27	15303	11171	3440	12597	9196	2581	11644	8500	3064	12896	9414	3950	12400	9052	4115	11656	8509	4403	11160	8147	4568
	22.0	30	16967	11050	3440	13973	9118	2581	12914	8423	3064	14260	9324	3992	13764	8961	4156	12400	8690	4568	11532	8509	4815
	24.0	32	18131	11050	3491	14925	9118	2614	13761	8423	3098	15252	9324	3992	14632	8961	4197	12896	8871	4691	11780	8780	4979
(1.2+1.8+5) + (1.8+1.8+3.5)	12.0	18	14029	9624	3345	10111	8166	2528	9358	7538	2979	10332	8370	3855	9954	8002	4022	9324	7542	4316	8946	7174	4483
	14.0	20	14029	9624	3345	10864	8166	2528	10111	7616	3015	11088	8370	3897	10710	8094	4064	9954	7542	4358	9576	7266	4567
	16.0	22	14029	10241	3398	11617	8166	2561	10756	7616	3050	11844	8370	3939	11466	8094	4148	10710	7542	4441	10332	7266	4609
	18.0	25	15043	10982	3450	12370	8873	2595	11401	8245	3085	12600	9106	3981	12096	8738	4148	11340	8186	4483	10836	7818	4651
	19.0	27	15550	11352	3502	12800	9344	2628	11832	8637	3120	13104	9566	4022	12600	9198	4190	11844	8646	4483	11340	8278	4651
	22.0	30	17240	11228	3502	14198	9265	2628	13122	8559	3120	14490	9474	4064	13986	9106	4232	12600	8830	4651	11718	8646	4902
	24.0	32	18424	11228	3555	15166	9265	2661	13983	8559	3155	15498	9474	4064	14868	9106	4274	13104	9014	4777	11970	8922	5070

	INDOOR		OUTDOOR TEMPERATURE (°CDB)																			
	EWB	EDB	-10			21			27			32			35			40			43		
	°C	°C	TC	SHC	PI	TC	SHC	PI	TC	SHC	PI	TC	SHC	PI	TC	SHC	PI	TC	SHC	PI	TC	SHC	PI
(1.2+1.8+5) + (1.8+1.8+5)	12.0	18	14029	9624	3345	10111	8166	2528	9358	7538	2979	10332	8370	3855	9954	8002	4022	9324	7542	4316	8946	7174	4483
	14.0	20	14029	9624	3345	10864	8166	2528	10111	7616	3015	11088	8370	3897	10710	8094	4064	9954	7542	4358	9576	7266	4567
	16.0	22	14029	10241	3398	11617	8166	2561	10756	7616	3050	11844	8370	3939	11466	8094	4148	10710	7542	4441	10332	7266	4609
	18.0	25	15043	10982	3450	12370	8873	2595	11401	8245	3085	12600	9106	3981	12096	8738	4148	11340	8186	4483	10836	7818	4651
	19.0	27	15550	11352	3502	12800	9344	2628	11832	8637	3120	13104	9566	4022	12600	9198	4190	11844	8646	4483	11340	8278	4651
	22.0	30	17240	11228	3502	14198	9265	2628	13122	8559	3120	14490	9474	4064	13986	9106	4232	12600	8830	4651	11718	8646	4902
	24.0	32	18424	11228	3555	15166	9265	2661	13983	8559	3155	15498	9474	4064	14868	9106	4274	13104	9014	4777	11970	8922	5070
(1.2+1.8+5) + (1.8+2.5+2.5)	12.0	18	14029	9624	3345	10111	8166	2528	9358	7538	2979	10332	8370	3855	9954	8002	4022	9324	7542	4316	8946	7174	4483
	14.0	20	14029	9624	3345	10864	8166	2528	10111	7616	3015	11088	8370	3897	10710	8094	4064	9954	7542	4358	9576	7266	4567
	16.0	22	14029	10241	3398	11617	8166	2561	10756	7616	3050	11844	8370	3939	11466	8094	4148	10710	7542	4441	10332	7266	4609
	18.0	25	15043	10982	3450	12370	8873	2595	11401	8245	3085	12600	9106	3981	12096	8738	4148	11340	8186	4483	10836	7818	4651
	19.0	27	15550	11352	3502	12800	9344	2628	11832	8637	3120	13104	9566	4022	12600	9198	4190	11844	8646	4483	11340	8278	4651
	22.0	30	17240	11228	3502	14198	9265	2628	13122	8559	3120	14490	9474	4064	13986	9106	4232	12600	8830	4651	11718	8646	4902
	24.0	32	18424	11228	3555	15166	9265	2661	13983	8559	3155	15498	9474	4064	14868	9106	4274	13104	9014	4777	11970	8922	5070
(1.2+1.8+5) + (1.8+2.5+3.5)	12.0	18	14029	9624	3345	10111	8166	2528	9358	7538	2979	10332	8370	3855	9954	8002	4022	9324	7542	4316	8946	7174	4483
	14.0	20	14029	9624	3345	10864	8166	2528	10111	7616	3015	11088	8370	3897	10710	8094	4064	9954	7542	4358	9576	7266	4567
	16.0	22	14029	10241	3398	11617	8166	2561	10756	7616	3050	11844	8370	3939	11466	8094	4148	10710	7542	4441	10332	7266	4609
	18.0	25	15043	10982	3450	12370	8873	2595	11401	8245	3085	12600	9106	3981	12096	8738	4148	11340	8186	4483	10836	7818	4651
	19.0	27	15550	11352	3502	12800	9344	2628	11832	8637	3120	13104	9566	4022	12600	9198	4190	11844	8646	4483	11340	8278	4651
	22.0	30	17240	11228	3502	14198	9265	2628	13122	8559	3120	14490	9474	4064	13986	9106	4232	12600	8830	4651	11718	8646	4902
	24.0	32	18424	11228	3555	15166	9265	2661	13983	8559	3155	15498	9474	4064	14868	9106	4274	13104	9014	4777	11970	8922	5070
(1.2+1.8+5) + (1.8+3.5+3.5)	12.0	18	14029	9624	3345	10111	8166	2528	9358	7538	2979	10332	8370	3855	9954	8002	4022	9324	7542	4316	8946	7174	4483
	14.0	20	14029	9624	3345	10864	8166	2528	10111	7616	3015	11088	8370	3897	10710	8094	4064	9954	7542	4358	9576	7266	4567
	16.0	22	14029	10241	3398	11617	8166	2561	10756	7616	3050	11844	8370	3939	11466	8094	4148	10710	7542	4441	10332	7266	4609
	18.0	25	15043	10982	3450	12370	8873	2595	11401	8245	3085	12600	9106	3981	12096	8738	4148	11340	8186	4483	10836	7818	4651
	19.0	27	15550	11352	3502	12800	9344	2628	11832	8637	3120	13104	9566	4022	12600	9198	4190	11844	8646	4483	11340	8278	4651
	22.0	30	17240	11228	3502	14198	9265	2628	13122	8559	3120	14490	9474	4064	13986	9106	4232	12600	8830	4651	11718	8646	4902
	24.0	32	18424	11228	3555	15166	9265	2661	13983	8559	3155	15498	9474	4064	14868	9106	4274	13104	9014	4777	11970	8922	5070
(1.2+1.8+5) + (2.5+2.5+2.5)	12.0	18	14029	9624	3345	10111	8166	2528	9358	7538	2979	10332	8370	3855	9954	8002	4022	9324	7542	4316	8946	7174	4483
	14.0	20	14029	9624	3345	10864	8166	2528	10111	7616	3015	11088	8370	3897	10710	8094	4064	9954	7542	4358	9576	7266	4567
	16.0	22	14029	10241	3398	11617	8166	2561	10756	7616	3050	11844	8370	3939	11466	8094	4148	10710	7542	4441	10332	7266	4609
	18.0	25	15043	10982	3450	12370	8873	2595	11401	8245	3085	12600	9106	3981	12096	8738	4148	11340	8186	4483	10836	7818	4651
	19.0	27	15550	11352	3502	12800	9344	2628	11832	8637	3120	13104	9566	4022	12600	9198	4190	11844	8646	4483	11340	8278	4651
	22.0	30	17240	11228	3502	14198	9265	2628	13122	8559	3120	14490	9474	4064	13986	9106	4232	12600	8830	4651	11718	8646	4902
	24.0	32	18424	11228	3555	15166	9265	2661	13983	8559	3155	15498	9474	4064	14868	9106	4274	13104	9014	4777	11970	8922	5070
(1.2+1.8+5) + (2.5+2.5+3.5)	12.0	18	14029	9624	3345	10111	8166	2528	9358	7538	2979	10332	8370	3855	9954	8002	4022	9324	7542	4316	8946	7174	4483
	14.0	20	14029	9624	3345	10864	8166	2528	10111	7616	3015	11088	8370	3897	10710	8094	4064	9954	7542	4358	9576	7266	4567
	16.0	22	14029	10241	3398	11617	8166	2561	10756	7616	3050	11844	8370	3939	11466	8094	4148	10710	7542	4441	10332	7266	4609
	18.0	25	15043	10982	3450	12370	8873	2595	11401	8245	3085	12600	9106	3981	12096	8738	4148	11340	8186	4483	10836	7818	4651
	19.0	27	15550	11352	3502	12800	9344	2628	11832	8637	3120	13104	9566	4022	12600	9198	4190	11844	8646	4483	11340	8278	4651
	22.0	30	17240	11228	3502	14198	9265	2628	13122	8559	3120	14490	9474	4064	13986	9106	4232	12600	8830	4651	11718	8646	4902
	24.0	32	18424	11228	3555	15166	9265	2661	13983	8559	3155	15498	9474	4064	14868	9106	4274	13104	9014	4777	11970	8922	5070
(1.2+2.5+2.5) + (1.2+1.2+1.2)	12.0	18	10911	7486	2475	7864	6351	1870	7278	5863	2204	8036	6510	2852	7742	6224	2976	7252	5866	3193	6958	5580	3317
	14.0	20	10911	7486	2475	8450	6351	1870	7864	5924	2230	8624	6510	2883	8330	6296	3007	7742	5866	3224	7448	5652	3379
	16.0	22	10911	7965	2514	9035	6351	1895	8366	5924	2256	9212	6510	2914	8918	6296	3069	8330	5866	3286	8036	5652	3410
	18.0	25	11700	8541	2553	9621	6901	1920	8868	6412	2282	9800	7082	2945	9408	6796	3069	8820	6367	3317	8428	6081	3441
	19.0	27	12095	8829	2591	9955	7267	1944	9202	6718	2308	10192	7440	2976	9800	7154	3100	9212	6725	3317	8820	6439	3441
	22.0	30	13409	8733	2591	11043	7206	1944	10206	6657	2308	11270	7369	3007	10878	7082	3131	9800	6868	3441	9114	6725	3627
	24.0	32	14330	8733	2630	11796	7206	1969	10876	6657	2334	12054	7369	3007	11564	7082	3162	10192	7011	3534	9310	6939	3751

	INDOOR		OUTDOOR TEMPERATURE (°CDB)																				
	EWB	EDB	-10			21			27			32			35			40			43		
	°C	°C	TC	SHC	PI	TC	SHC	PI	TC	SHC	PI	TC	SHC	PI	TC	SHC	PI	TC	SHC	PI	TC	SHC	PI
(1.2+2.5+2.5) + (1.2+1.2+1.8)	12.0	18	11580	7944	2611	8345	6740	1973	7724	6222	2325	8528	6909	3008	8216	6605	3139	7696	6225	3368	7384	5922	3499
	14.0	20	11580	7944	2611	8967	6740	1973	8345	6287	2353	9152	6909	3041	8840	6681	3172	8216	6225	3401	7904	5998	3564
	16.0	22	11580	8453	2652	9588	6740	1999	8878	6287	2380	9776	6909	3074	9464	6681	3237	8840	6225	3466	8528	5998	3597
	18.0	25	12417	9064	2692	10210	7324	2025	9411	6805	2407	10400	7516	3107	9984	7212	3237	9360	6757	3499	8944	6453	3630
	19.0	27	12835	9370	2733	10565	7712	2051	9766	7129	2435	10816	7896	3139	10400	7592	3270	9776	7136	3499	9360	6833	3630
	22.0	30	14230	9268	2733	11719	7648	2051	10831	7064	2435	11960	7820	3172	11544	7516	3303	10400	7288	3630	9672	7136	3826
	24.0	32	15207	9268	2774	12518	7648	2077	11541	7064	2462	12792	7820	3172	12272	7516	3335	10816	7440	3728	9880	7364	3957
(1.2+2.5+2.5) + (1.2+1.2+2.5)	12.0	18	12359	8479	2771	8907	7194	2094	8244	6641	2468	9102	7374	3192	8769	7050	3331	8214	6644	3574	7881	6320	3713
	14.0	20	12359	8479	2771	9570	7194	2094	8907	6710	2497	9768	7374	3227	9435	7131	3366	8769	6644	3609	8436	6401	3782
	16.0	22	12359	9022	2814	10234	7194	2121	9476	6710	2526	10434	7374	3262	10101	7131	3435	9435	6644	3678	9102	6401	3817
	18.0	25	13252	9674	2857	10897	7816	2149	10044	7263	2555	11100	8022	3297	10656	7698	3435	9990	7212	3713	9546	6888	3852
	19.0	27	13699	10000	2900	11276	8231	2176	10423	7609	2584	11544	8427	3331	11100	8103	3470	10434	7617	3713	9990	7293	3852
	22.0	30	15188	9892	2900	12508	8162	2176	11560	7540	2584	12765	8346	3366	12321	8022	3505	11100	7779	3852	10323	7617	4060
	24.0	32	16230	9892	2944	13361	8162	2204	12318	7540	2613	13653	8346	3366	13098	8022	3539	11544	7941	3956	10545	7860	4199
(1.2+2.5+2.5) + (1.2+1.2+3.5)	12.0	18	13472	9242	2830	9710	7842	2139	8986	7239	2521	9922	8038	3261	9559	7685	3403	8954	7243	3651	8591	6890	3793
	14.0	20	13472	9242	2830	10433	7842	2139	9710	7314	2550	10648	8038	3297	10285	7773	3439	9559	7243	3687	9196	6978	3864
	16.0	22	13472	9835	2875	11156	7842	2167	10329	7314	2580	11374	8038	3332	11011	7773	3510	10285	7243	3758	9922	6978	3900
	18.0	25	14446	10546	2919	11879	8521	2195	10949	7917	2610	12100	8745	3368	11616	8391	3510	10890	7861	3793	10406	7508	3935
	19.0	27	14933	10901	2963	12292	8973	2223	11362	8294	2639	12584	9186	3403	12100	8833	3545	11374	8303	3793	10890	7950	3935
	22.0	30	16556	10783	2963	13635	8898	2223	12602	8219	2639	13915	9098	3439	13431	8745	3580	12100	8480	3935	11253	8303	4148
	24.0	32	17693	10783	3007	14564	8898	2252	13428	8219	2669	14883	9098	3439	14278	8745	3616	12584	8656	4041	11495	8568	4289
(1.2+2.5+2.5) + (1.2+1.2+5)	12.0	18	13918	9548	3286	10030	8101	2483	9284	7478	2926	10250	8304	3786	9875	7939	3950	9250	7483	4238	8875	7118	4403
	14.0	20	13918	9548	3286	10777	8101	2483	10030	7556	2961	11000	8304	3827	10625	8030	3992	9875	7483	4280	9500	7209	4485
	16.0	22	13918	10160	3337	11524	8101	2516	10671	7556	2995	11750	8304	3868	11375	8030	4074	10625	7483	4362	10250	7209	4527
	18.0	25	14924	10894	3388	12271	8802	2548	11311	8179	3029	12500	9034	3909	12000	8669	4074	11250	8121	4403	10750	7756	4568
	19.0	27	15427	11262	3440	12698	9270	2581	11738	8569	3064	13000	9490	3950	12500	9125	4115	11750	8578	4403	11250	8213	4568
	22.0	30	17104	11139	3440	14085	9192	2581	13018	8491	3064	14375	9399	3992	13875	9034	4156	12500	8760	4568	11625	8578	4815
	24.0	32	18277	11139	3491	15046	9192	2614	13872	8491	3098	15375	9399	3992	14750	9034	4197	13000	8943	4691	11875	8851	4979
(1.2+2.5+2.5) + (1.2+1.8+1.8)	12.0	18	12248	8402	2747	8827	7129	2076	8170	6581	2446	9020	7307	3165	8690	6986	3302	8140	6585	3543	7810	6263	3681
	14.0	20	12248	8402	2747	9484	7129	2076	8827	6649	2475	9680	7307	3199	9350	7066	3337	8690	6585	3578	8360	6344	3750
	16.0	22	12248	8941	2790	10141	7129	2103	9390	6649	2504	10340	7307	3234	10010	7066	3406	9350	6585	3646	9020	6344	3784
	18.0	25	13133	9587	2832	10799	7746	2130	9954	7198	2533	11000	7950	3268	10560	7629	3406	9900	7147	3681	9460	6826	3818
	19.0	27	13576	9910	2875	11174	8157	2158	10329	7540	2561	11440	8351	3302	11000	8030	3440	10340	7548	3681	9900	7227	3818
	22.0	30	15051	9802	2875	12395	8089	2158	11456	7472	2561	12650	8271	3337	12210	7950	3474	11000	7709	3818	10230	7548	4025
	24.0	32	16084	9802	2918	13240	8089	2185	12207	7472	2590	13530	8271	3337	12980	7950	3509	11440	7869	3922	10450	7789	4162
(1.2+2.5+2.5) + (1.2+1.8+2.5)	12.0	18	13027	8937	3034	9389	7583	2293	8689	6999	2702	9594	7772	3496	9243	7431	3648	8658	7004	3914	8307	6662	4066
	14.0	20	13027	8937	3034	10088	7583	2293	9389	7072	2734	10296	7772	3534	9945	7516	3686	9243	7004	3952	8892	6747	4142
	16.0	22	13027	9510	3081	10787	7583	2323	9988	7072	2766	10998	7772	3572	10647	7516	3762	9945	7004	4028	9594	6747	4180
	18.0	25	13969	10197	3129	11486	8239	2353	10587	7656	2798	11700	8456	3610	11232	8114	3762	10530	7601	4066	10062	7260	4218
	19.0	27	14440	10541	3176	11885	8676	2383	10987	8020	2829	12168	8883	3648	11700	8541	3800	10998	8029	4066	10530	7687	4218
	22.0	30	16009	10426	3176	13184	8603	2383	12185	7947	2829	13455	8797	3686	12987	8456	3838	11700	8199	4218	10881	8029	4446
	24.0	32	17108	10426	3224	14083	8603	2413	12984	7947	2861	14391	8797	3686	13806	8456	3876	12168	8370	4332	11115	8285	4598
(1.2+2.5+2.5) + (1.2+1.8+3.5)	12.0	18	13918	9548	3226	10030	8101	2438	9284	7478	2873	10250	8304	3717	9875	7939	3878	9250	7483	4161	8875	7118	4323
	14.0	20	13918	9548	3226	10777	8101	2438	10030	7556	2907	11000	8304	3757	10625	8030	3919	9875	7483	4202	9500	7209	4404
	16.0	22	13918	10160	3276	11524	8101	2470	10671	7556	2940	11750	8304	3798	11375	8030	4000	10625	7483	4282	10250	7209	4444
	18.0	25	14924	10894	3326	12271	8802	2502	11311	8179	2974	12500	9034	3838	12000	8669	4000	11250	8121	4323	10750	7756	4484
	19.0	27	15427	11262	3377	12698	9270	2534	11738	8569	3008	13000	9490	3878	12500	9125	4040	11750	8578	4323	11250	8213	4484
	22.0	30	17104	11139	3377	14085	9192	2534	13018	8491	3008	14375	9399	3919	13875	9034	4080	12500	8760	4484	11625	8578	4727
	24.0	32	18277	11139	3427	15046	9192	2566	13872	8491	3042	15375	9399	3919	14750	9034	4121	13000	8943	4606	11875	8851	4888

	INDOOR		OUTDOOR TEMPERATURE (°CDB)																				
	EWB	EDB	-10			21			27			32			35			40			43		
	°C	°C	TC	SHC	PI	TC	SHC	PI	TC	SHC	PI	TC	SHC	PI	TC	SHC	PI	TC	SHC	PI	TC	SHC	PI
(1.2+2.5+2.5) + (1.2+1.8+5)	12.0	18	13918	9548	3286	10030	8101	2483	9284	7478	2926	10250	8304	3786	9875	7939	3950	9250	7483	4238	8875	7118	4403
	14.0	20	13918	9548	3286	10777	8101	2483	10030	7556	2961	11000	8304	3827	10625	8030	3992	9875	7483	4280	9500	7209	4485
	16.0	22	13918	10160	3337	11524	8101	2516	10671	7556	2995	11750	8304	3868	11375	8030	4074	10625	7483	4362	10250	7209	4527
	18.0	25	14924	10894	3388	12271	8802	2548	11311	8179	3029	12500	9034	3909	12000	8669	4074	11250	8121	4403	10750	7756	4568
	19.0	27	15427	11262	3440	12698	9270	2581	11738	8569	3064	13000	9490	3950	12500	9125	4115	11750	8578	4403	11250	8213	4568
	22.0	30	17104	11139	3440	14085	9192	2581	13018	8491	3064	14375	9399	3992	13875	9034	4156	12500	8760	4568	11625	8578	4815
	24.0	32	18277	11139	3491	15046	9192	2614	13872	8491	3098	15375	9399	3992	14750	9034	4197	13000	8943	4691	11875	8851	4979
(1.2+2.5+2.5) + (1.2+2.5+2.5)	12.0	18	13806	9471	3226	9950	8036	2438	9209	7418	2873	10168	8237	3717	9796	7875	3878	9176	7423	4161	8804	7061	4323
	14.0	20	13806	9471	3226	10691	8036	2438	9950	7495	2907	10912	8237	3757	10540	7966	3919	9796	7423	4202	9424	7151	4404
	16.0	22	13806	10079	3276	11432	8036	2470	10585	7495	2940	11656	8237	3798	11284	7966	4000	10540	7423	4282	10168	7151	4444
	18.0	25	14804	10807	3326	12173	8732	2502	11220	8114	2974	12400	8961	3838	11904	8599	4000	11160	8056	4323	10664	7694	4484
	19.0	27	15303	11171	3377	12597	9196	2534	11644	8500	3008	12896	9414	3878	12400	9052	4040	11656	8509	4323	11160	8147	4484
	22.0	30	16967	11050	3377	13973	9118	2534	12914	8423	3008	14260	9324	3919	13764	8961	4080	12400	8690	4484	11532	8509	4727
	24.0	32	18131	11050	3427	14925	9118	2566	13761	8423	3042	15252	9324	3919	14632	8961	4121	12896	8871	4606	11780	8780	4888
(1.2+2.5+2.5) + (1.2+2.5+3.5)	12.0	18	13918	9548	3286	10030	8101	2483	9284	7478	2926	10250	8304	3786	9875	7939	3950	9250	7483	4238	8875	7118	4403
	14.0	20	13918	9548	3286	10777	8101	2483	10030	7556	2961	11000	8304	3827	10625	8030	3992	9875	7483	4280	9500	7209	4485
	16.0	22	13918	10160	3337	11524	8101	2516	10671	7556	2995	11750	8304	3868	11375	8030	4074	10625	7483	4362	10250	7209	4527
	18.0	25	14924	10894	3388	12271	8802	2548	11311	8179	3029	12500	9034	3909	12000	8669	4074	11250	8121	4403	10750	7756	4568
	19.0	27	15427	11262	3440	12698	9270	2581	11738	8569	3064	13000	9490	3950	12500	9125	4115	11750	8578	4403	11250	8213	4568
	22.0	30	17104	11139	3440	14085	9192	2581	13018	8491	3064	14375	9399	3992	13875	9034	4156	12500	8760	4568	11625	8578	4815
	24.0	32	18277	11139	3491	15046	9192	2614	13872	8491	3098	15375	9399	3992	14750	9034	4197	13000	8943	4691	11875	8851	4979
(1.2+2.5+2.5) + (1.2+3.5+3.5)	12.0	18	13918	9548	3286	10030	8101	2483	9284	7478	2926	10250	8304	3786	9875	7939	3950	9250	7483	4238	8875	7118	4403
	14.0	20	13918	9548	3286	10777	8101	2483	10030	7556	2961	11000	8304	3827	10625	8030	3992	9875	7483	4280	9500	7209	4485
	16.0	22	13918	10160	3337	11524	8101	2516	10671	7556	2995	11750	8304	3868	11375	8030	4074	10625	7483	4362	10250	7209	4527
	18.0	25	14924	10894	3388	12271	8802	2548	11311	8179	3029	12500	9034	3909	12000	8669	4074	11250	8121	4403	10750	7756	4568
	19.0	27	15427	11262	3440	12698	9270	2581	11738	8569	3064	13000	9490	3950	12500	9125	4115	11750	8578	4403	11250	8213	4568
	22.0	30	17104	11139	3440	14085	9192	2581	13018	8491	3064	14375	9399	3992	13875	9034	4156	12500	8760	4568	11625	8578	4815
	24.0	32	18277	11139	3491	15046	9192	2614	13872	8491	3098	15375	9399	3992	14750	9034	4197	13000	8943	4691	11875	8851	4979
(1.2+2.5+2.5) + (1.8+1.8+1.8)	12.0	18	12916	8860	3034	9308	7518	2293	8615	6940	2702	9512	7706	3496	9164	7367	3648	8584	6944	3914	8236	6605	4066
	14.0	20	12916	8860	3034	10001	7518	2293	9308	7012	2734	10208	7706	3534	9860	7452	3686	9164	6944	3952	8816	6690	4142
	16.0	22	12916	9428	3081	10695	7518	2323	9902	7012	2766	10904	7706	3572	10556	7452	3762	9860	6944	4028	9512	6690	4180
	18.0	25	13849	10110	3129	11388	8169	2353	10497	7590	2798	11600	8383	3610	11136	8045	3762	10440	7537	4066	9976	7198	4218
	19.0	27	14316	10451	3176	11784	8602	2383	10893	7952	2829	12064	8807	3648	11600	8468	3800	10904	7960	4066	10440	7621	4218
	22.0	30	15872	10337	3176	13071	8530	2383	12081	7879	2829	13340	8722	3686	12876	8383	3838	11600	8129	4218	10788	7960	4446
	24.0	32	16961	10337	3224	13962	8530	2413	12873	7879	2861	14268	8722	3686	13688	8383	3876	12064	8299	4332	11020	8214	4598
(1.2+2.5+2.5 + (1.8+1.8+2.5)	12.0	18	13695	9395	3226	9870	7972	2438	9135	7358	2873	10086	8171	3717	9717	7812	3878	9102	7363	4161	8733	7004	4323
	14.0	20	13695	9395	3226	10605	7972	2438	9870	7435	2907	10824	8171	3757	10455	7902	3919	9717	7363	4202	9348	7093	4404
	16.0	22	13695	9997	3276	11340	7972	2470	10500	7435	2940	11562	8171	3798	11193	7902	4000	10455	7363	4282	10086	7093	4444
	18.0	25	14685	10720	3326	12075	8661	2502	11130	8048	2974	12300	8889	3838	11808	8530	4000	11070	7991	4323	10578	7632	4484
	19.0	27	15180	11081	3377	12495	9121	2534	11550	8432	3008	12792	9338	3878	12300	8979	4040	11562	8440	4323	11070	8081	4484
	22.0	30	16830	10961	3377	13860	9045	2534	12810	8355	3008	14145	9248	3919	13653	8889	4080	12300	8620	4484	11439	8440	4727
	24.0	32	17985	10961	3427	14805	9045	2566	13650	8355	3042	15129	9248	3919	14514	8889	4121	12792	8799	4606	11685	8710	4888
(1.2+2.5+2.5) + (1.8+1.8+3.5)	12.0	18	13918	9548	3286	10030	8101	2483	9284	7478	2926	10250	8304	3786	9875	7939	3950	9250	7483	4238	8875	7118	4403
	14.0	20	13918	9548	3286	10777	8101	2483	10030	7556	2961	11000	8304	3827	10625	8030	3992	9875	7483	4280	9500	7209	4485
	16.0	22	13918	10160	3337	11524	8101	2516	10671	7556	2995	11750	8304	3868	11375	8030	4074	10625	7483	4362	10250	7209	4527
	18.0	25	14924	10894	3388	12271	8802	2548	11311	8179	3029	12500	9034	3909	12000	8669	4074	11250	8121	4403	10750	7756	4568
	19.0	27	15427	11262	3440	12698	9270	2581	11738	8569	3064	13000	9490	3950	12500	9125	4115	11750	8578	4403	11250	8213	4568
	22.0	30	17104	11139	3440	14085	9192	2581	13018	8491	3064	14375	9399	3992	13875	9034	4156	12500	8760	4568	11625	8578	4815
	24.0	32	18277	11139	3491	15046	9192	2614	13872	8491	3098	15375	9399	3992	14750	9034	4197	13000	8943	4691	11875	8851	4979

	INDOOR		OUTDOOR TEMPERATURE (°CDB)																				
	EWB	EDB	-10			21			27			32			35			40			43		
	°C	°C	TC	SHC	PI	TC	SHC	PI	TC	SHC	PI	TC	SHC	PI	TC	SHC	PI	TC	SHC	PI	TC	SHC	PI
(1.2+2.5+2.5) + (1.8+1.8+5)	12.0	18	13918	9548	3286	10030	8101	2483	9284	7478	2926	10250	8304	3786	9875	7939	3950	9250	7483	4238	8875	7118	4403
	14.0	20	13918	9548	3286	10777	8101	2483	10030	7556	2961	11000	8304	3827	10625	8030	3992	9875	7483	4280	9500	7209	4485
	16.0	22	13918	10160	3337	11524	8101	2516	10671	7556	2995	11750	8304	3868	11375	8030	4074	10625	7483	4362	10250	7209	4527
	18.0	25	14924	10894	3388	12271	8802	2548	11311	8179	3029	12500	9034	3909	12000	8669	4074	11250	8121	4403	10750	7756	4568
	19.0	27	15427	11262	3440	12698	9270	2581	11738	8569	3064	13000	9490	3950	12500	9125	4115	11750	8578	4403	11250	8213	4568
	22.0	30	17104	11139	3440	14085	9192	2581	13018	8491	3064	14375	9399	3992	13875	9034	4156	12500	8760	4568	11625	8578	4815
	24.0	32	18277	11139	3491	15046	9192	2614	13872	8491	3098	15375	9399	3992	14750	9034	4197	13000	8943	4691	11875	8851	4979
(1.2+2.5+2.5) + (1.8+2.5+2.5)	12.0	18	13918	9548	3286	10030	8101	2483	9284	7478	2926	10250	8304	3786	9875	7939	3950	9250	7483	4238	8875	7118	4403
	14.0	20	13918	9548	3286	10777	8101	2483	10030	7556	2961	11000	8304	3827	10625	8030	3992	9875	7483	4280	9500	7209	4485
	16.0	22	13918	10160	3337	11524	8101	2516	10671	7556	2995	11750	8304	3868	11375	8030	4074	10625	7483	4362	10250	7209	4527
	18.0	25	14924	10894	3388	12271	8802	2548	11311	8179	3029	12500	9034	3909	12000	8669	4074	11250	8121	4403	10750	7756	4568
	19.0	27	15427	11262	3440	12698	9270	2581	11738	8569	3064	13000	9490	3950	12500	9125	4115	11750	8578	4403	11250	8213	4568
	22.0	30	17104	11139	3440	14085	9192	2581	13018	8491	3064	14375	9399	3992	13875	9034	4156	12500	8760	4568	11625	8578	4815
	24.0	32	18277	11139	3491	15046	9192	2614	13872	8491	3098	15375	9399	3992	14750	9034	4197	13000	8943	4691	11875	8851	4979
(1.2+2.5+2.5) + (1.8+2.5+3.5)	12.0	18	13918	9548	3286	10030	8101	2483	9284	7478	2926	10250	8304	3786	9875	7939	3950	9250	7483	4238	8875	7118	4403
	14.0	20	13918	9548	3286	10777	8101	2483	10030	7556	2961	11000	8304	3827	10625	8030	3992	9875	7483	4280	9500	7209	4485
	16.0	22	13918	10160	3337	11524	8101	2516	10671	7556	2995	11750	8304	3868	11375	8030	4074	10625	7483	4362	10250	7209	4527
	18.0	25	14924	10894	3388	12271	8802	2548	11311	8179	3029	12500	9034	3909	12000	8669	4074	11250	8121	4403	10750	7756	4568
	19.0	27	15427	11262	3440	12698	9270	2581	11738	8569	3064	13000	9490	3950	12500	9125	4115	11750	8578	4403	11250	8213	4568
	22.0	30	17104	11139	3440	14085	9192	2581	13018	8491	3064	14375	9399	3992	13875	9034	4156	12500	8760	4568	11625	8578	4815
	24.0	32	18277	11139	3491	15046	9192	2614	13872	8491	3098	15375	9399	3992	14750	9034	4197	13000	8943	4691	11875	8851	4979
(1.2+2.5+2.5) + (1.8+3.5+3.5)	12.0	18	13918	9548	3286	10030	8101	2483	9284	7478	2926	10250	8304	3786	9875	7939	3950	9250	7483	4238	8875	7118	4403
	14.0	20	13918	9548	3286	10777	8101	2483	10030	7556	2961	11000	8304	3827	10625	8030	3992	9875	7483	4280	9500	7209	4485
	16.0	22	13918	10160	3337	11524	8101	2516	10671	7556	2995	11750	8304	3868	11375	8030	4074	10625	7483	4362	10250	7209	4527
	18.0	25	14924	10894	3388	12271	8802	2548	11311	8179	3029	12500	9034	3909	12000	8669	4074	11250	8121	4403	10750	7756	4568
	19.0	27	15427	11262	3440	12698	9270	2581	11738	8569	3064	13000	9490	3950	12500	9125	4115	11750	8578	4403	11250	8213	4568
	22.0	30	17104	11139	3440	14085	9192	2581	13018	8491	3064	14375	9399	3992	13875	9034	4156	12500	8760	4568	11625	8578	4815
	24.0	32	18277	11139	3491	15046	9192	2614	13872	8491	3098	15375	9399	3992	14750	9034	4197	13000	8943	4691	11875	8851	4979
(1.2+2.5+2.5) + (2.5+2.5+2.5)	12.0	18	13918	9548	3286	10030	8101	2483	9284	7478	2926	10250	8304	3786	9875	7939	3950	9250	7483	4238	8875	7118	4403
	14.0	20	13918	9548	3286	10777	8101	2483	10030	7556	2961	11000	8304	3827	10625	8030	3992	9875	7483	4280	9500	7209	4485
	16.0	22	13918	10160	3337	11524	8101	2516	10671	7556	2995	11750	8304	3868	11375	8030	4074	10625	7483	4362	10250	7209	4527
	18.0	25	14924	10894	3388	12271	8802	2548	11311	8179	3029	12500	9034	3909	12000	8669	4074	11250	8121	4403	10750	7756	4568
	19.0	27	15427	11262	3440	12698	9270	2581	11738	8569	3064	13000	9490	3950	12500	9125	4115	11750	8578	4403	11250	8213	4568
	22.0	30	17104	11139	3440	14085	9192	2581	13018	8491	3064	14375	9399	3992	13875	9034	4156	12500	8760	4568	11625	8578	4815
	24.0	32	18277	11139	3491	15046	9192	2614	13872	8491	3098	15375	9399	3992	14750	9034	4197	13000	8943	4691	11875	8851	4979
(1.2+2.5+2.5) + (2.5+2.5+3.5)	12.0	18	13918	9548	3286	10030	8101	2483	9284	7478	2926	10250	8304	3786	9875	7939	3950	9250	7483	4238	8875	7118	4403
	14.0	20	13918	9548	3286	10777	8101	2483	10030	7556	2961	11000	8304	3827	10625	8030	3992	9875	7483	4280	9500	7209	4485
	16.0	22	13918	10160	3337	11524	8101	2516	10671	7556	2995	11750	8304	3868	11375	8030	4074	10625	7483	4362	10250	7209	4527
	18.0	25	14924	10894	3388	12271	8802	2548	11311	8179	3029	12500	9034	3909	12000	8669	4074	11250	8121	4403	10750	7756	4568
	19.0	27	15427	11262	3440	12698	9270	2581	11738	8569	3064	13000	9490	3950	12500	9125	4115	11750	8578	4403	11250	8213	4568
	22.0	30	17104	11139	3440	14085	9192	2581	13018	8491	3064	14375	9399	3992	13875	9034	4156	12500	8760	4568	11625	8578	4815
	24.0	32	18277	11139	3491	15046	9192	2614	13872	8491	3098	15375	9399	3992	14750	9034	4197	13000	8943	4691	11875	8851	4979
(1.2+2.5+3.5) + (1.2+1.2+1.2)	12.0	18	11023	7562	2535	7944	6416	1916	7353	5923	2258	8118	6577	2921	7821	6287	3048	7326	5926	3270	7029	5637	3397
	14.0	20	11023	7562	2535	8536	6416	1916	7944	5984	2284	8712	6577	2953	8415	6360	3080	7821	5926	3302	7524	5709	3461
	16.0	22	11023	8047	2575	9127	6416	1941	8451	5984	2311	9306	6577	2985	9009	6360	3143	8415	5926	3366	8118	5709	3493
	18.0	25	11820	8628	2614	9719	6971	1966	8958	6478	2337	9900	7155	3016	9504	6866	3143	8910	6432	3397	8514	6143	3524
	19.0	27	12218	8919	2654	10057	7342	1991	9296	6786	2364	10296	7516	3048	9900	7227	3175	9306	6793	3397	8910	6504	3524
	22.0	30	13546	8822	2654	11156	7280	1991	10310	6725	2364	11385	7444	3080	10989	7155	3207	9900	6938	3524	9207	6793	3715
	24.0	32	14476	8822	2693	11916	7280	2017	10987	6725	2391	12177	7444	3080	11682	7155	3239	10296	7082	3620	9405	7010	3842

	INDOOR		OUTDOOR TEMPERATURE (°CDB)																				
	EWB	EDB	-10			21			27			32			35			40			43		
	°C	°C	TC	SHC	PI	TC	SHC	PI	TC	SHC	PI	TC	SHC	PI	TC	SHC	PI	TC	SHC	PI	TC	SHC	PI
(1.2+2.5+3.5) + (1.2+1.2+1.8)	12.0	18	11691	8020	2671	8426	6805	2018	7798	6282	2379	8610	6975	3077	8295	6669	3211	7770	6285	3445	7455	5979	3579
	14.0	20	11691	8020	2671	9053	6805	2018	8426	6347	2407	9240	6975	3111	8925	6745	3245	8295	6285	3479	7980	6055	3646
	16.0	22	11691	8534	2713	9680	6805	2045	8963	6347	2435	9870	6975	3144	9555	6745	3312	8925	6285	3546	8610	6055	3680
	18.0	25	12536	9151	2754	10308	7394	2071	9501	6870	2463	10500	7588	3178	10080	7282	3312	9450	6822	3579	9030	6515	3713
	19.0	27	12959	9460	2796	10666	7787	2098	9860	7198	2491	10920	7972	3211	10500	7665	3345	9870	7205	3579	9450	6899	3713
	22.0	30	14367	9357	2796	11832	7721	2098	10935	7132	2491	12075	7895	3245	11655	7588	3378	10500	7358	3713	9765	7205	3914
	24.0	32	15353	9357	2838	12638	7721	2124	11652	7132	2519	12915	7895	3245	12390	7588	3412	10920	7512	3813	9975	7435	4047
(1.2+2.5+3.5) + (1.2+1.2+2.5)	12.0	18	12470	8555	2830	8987	7259	2139	8318	6700	2521	9184	7440	3261	8848	7113	3403	8288	6704	3651	7952	6377	3793
	14.0	20	12470	8555	2830	9657	7259	2139	8987	6770	2550	9856	7440	3297	9520	7195	3439	8848	6704	3687	8512	6459	3864
	16.0	22	12470	9103	2875	10326	7259	2167	9561	6770	2580	10528	7440	3332	10192	7195	3510	9520	6704	3758	9184	6459	3900
	18.0	25	13372	9761	2919	10995	7887	2195	10135	7328	2610	11200	8094	3368	10752	7767	3510	10080	7277	3793	9632	6950	3935
	19.0	27	13822	10090	2963	11378	8306	2223	10517	7677	2639	11648	8503	3403	11200	8176	3545	10528	7685	3793	10080	7358	3935
	22.0	30	15325	9981	2963	12620	8236	2223	11664	7608	2639	12880	8421	3439	12432	8094	3580	11200	7849	3935	10416	7685	4148
	24.0	32	16377	9981	3007	13481	8236	2252	12429	7608	2669	13776	8421	3439	13216	8094	3616	11648	8012	4041	10640	7931	4289
(1.2+2.5+3.5) + (1.2+1.2+3.5)	12.0	18	13584	9319	2890	9790	7907	2184	9061	7299	2574	10004	8104	3330	9638	7748	3475	9028	7303	3729	8662	6947	3873
	14.0	20	13584	9319	2890	10519	7907	2184	9790	7375	2604	10736	8104	3367	10370	7837	3511	9638	7303	3765	9272	7036	3946
	16.0	22	13584	9916	2936	11248	7907	2213	10415	7375	2635	11468	8104	3403	11102	7837	3584	10370	7303	3837	10004	7036	3982
	18.0	25	14566	10633	2981	11977	8591	2242	11040	7983	2665	12200	8817	3439	11712	8461	3584	10980	7926	3873	10492	7570	4018
	19.0	27	15057	10991	3026	12393	9047	2270	11456	8363	2695	12688	9262	3475	12200	8906	3620	11468	8372	3873	10980	8015	4018
	22.0	30	16693	10872	3026	13747	8971	2270	12706	8287	2695	14030	9173	3511	13542	8817	3656	12200	8550	4018	11346	8372	4235
	24.0	32	17839	10872	3071	14685	8971	2299	13539	8287	2726	15006	9173	3511	14396	8817	3692	12688	8728	4127	11590	8639	4380
(1.2+2.5+3.5) + (1.2+1.2+5)	12.0	18	14029	9624	3345	10111	8166	2528	9358	7538	2979	10332	8370	3855	9954	8002	4022	9324	7542	4316	8946	7174	4483
	14.0	20	14029	9624	3345	10864	8166	2528	10111	7616	3015	11088	8370	3897	10710	8094	4064	9954	7542	4358	9576	7266	4567
	16.0	22	14029	10241	3398	11617	8166	2561	10756	7616	3050	11844	8370	3939	11466	8094	4148	10710	7542	4441	10332	7266	4609
	18.0	25	15043	10982	3450	12370	8873	2595	11401	8245	3085	12600	9106	3981	12096	8738	4148	11340	8186	4483	10836	7818	4651
	19.0	27	15550	11352	3502	12800	9344	2628	11832	8637	3120	13104	9566	4022	12600	9198	4190	11844	8646	4483	11340	8278	4651
	22.0	30	17240	11228	3502	14198	9265	2628	13122	8559	3120	14490	9474	4064	13986	9106	4232	12600	8830	4651	11718	8646	4902
	24.0	32	18424	11228	3555	15166	9265	2661	13983	8559	3155	15498	9474	4064	14868	9106	4274	13104	9014	4777	11970	8922	5070
(1.2+2.5+3.5) + (1.2+1.8+1.8)	12.0	18	12359	8479	2807	8907	7194	2121	8244	6641	2500	9102	7374	3234	8769	7050	3374	8214	6644	3620	7881	6320	3761
	14.0	20	12359	8479	2807	9570	7194	2121	8907	6710	2529	9768	7374	3269	9435	7131	3410	8769	6644	3656	8436	6401	3831
	16.0	22	12359	9022	2850	10234	7194	2149	9476	6710	2558	10434	7374	3304	10101	7131	3480	9435	6644	3726	9102	6401	3867
	18.0	25	13252	9674	2894	10897	7816	2177	10044	7263	2588	11100	8022	3339	10656	7698	3480	9990	7212	3761	9546	6888	3902
	19.0	27	13699	10000	2938	11276	8231	2205	10423	7609	2617	11544	8427	3374	11100	8103	3515	10434	7617	3761	9990	7293	3902
	22.0	30	15188	9892	2938	12508	8162	2205	11560	7540	2617	12765	8346	3410	12321	8022	3550	11100	7779	3902	10323	7617	4113
	24.0	32	16230	9892	2982	13361	8162	2232	12318	7540	2647	13653	8346	3410	13098	8022	3585	11544	7941	4007	10545	7860	4253
(1.2+2.5+3.5) + (1.2+1.8+2.5)	12.0	18	13138	9013	3094	9469	7648	2338	8764	7059	2756	9676	7839	3565	9322	7494	3720	8732	7063	3991	8378	6719	4146
	14.0	20	13138	9013	3094	10174	7648	2338	9469	7133	2788	10384	7839	3604	10030	7580	3759	9322	7063	4030	8968	6805	4224
	16.0	22	13138	9591	3142	10879	7648	2369	10073	7133	2820	11092	7839	3643	10738	7580	3836	10030	7063	4108	9676	6805	4263
	18.0	25	14088	10284	3191	11584	8309	2400	10678	7721	2853	11800	8528	3681	11328	8183	3836	10620	7666	4146	10148	7322	4301
	19.0	27	14563	10631	3239	11987	8751	2430	11080	8089	2885	12272	8959	3720	11800	8614	3875	11092	8097	4146	10620	7753	4301
	22.0	30	16146	10515	3239	13297	8677	2430	12289	8015	2885	13570	8872	3759	13098	8528	3914	11800	8269	4301	10974	8097	4534
	24.0	32	17254	10515	3287	14203	8677	2461	13095	8015	2918	14514	8872	3759	13924	8528	3953	12272	8442	4418	11210	8356	4689
(1.2+2.5+3.5 + (1.2+1.8+3.5)	12.0	18	14029	9624	3286	10111	8166	2483	9358	7538	2926	10332	8370	3786	9954	8002	3950	9324	7542	4238	8946	7174	4403
	14.0	20	14029	9624	3286	10864	8166	2483	10111	7616	2961	11088	8370	3827	10710	8094	3992	9954	7542	4280	9576	7266	4485
	16.0	22	14029	10241	3337	11617	8166	2516	10756	7616	2995	11844	8370	3868	11466	8094	4074	10710	7542	4362	10332	7266	4527
	18.0	25	15043	10982	3388	12370	8873	2548	11401	8245	3029	12600	9106	3909	12096	8738	4074	11340	8186	4403	10836	7818	4568
	19.0	27	15550	11352	3440	12800	9344	2581	11832	8637	3064	13104	9566	3950	12600	9198	4115	11844	8646	4403	11340	8278	4568
	22.0	30	17240	11228	3440	14198	9265	2581	13122	8559	3064	14490	9474	3992	13986	9106	4156	12600	8830	4568	11718	8646	4815
	24.0	32	18424	11228	3491	15166	9265	2614	13983	8559	3098	15498	9474	3992	14868	9106	4197	13104	9014	4691	11970	8922	4979

	INDOOR		OUTDOOR TEMPERATURE (°CDB)																					
	EWB	EDB	-10			21			27			32			35			40			43			
	°C	°C	TC	SHC	PI	TC	SHC	PI	TC	SHC	PI	TC	SHC	PI	TC	SHC	PI	TC	SHC	PI	TC	SHC	PI	
(1.2+2.5+3.5) + (1.2+1.8+5)	12.0	18	14029	9624	3345	10111	8166	2528	9358	7538	2979	10332	8370	3855	9954	8002	4022	9324	7542	4316	8946	7174	4483	
	14.0	20	14029	9624	3345	10864	8166	2528	10111	7616	3015	11088	8370	3897	10710	8094	4064	9954	7542	4358	9576	7266	4567	
	16.0	22	14029	10241	3398	11617	8166	2561	10756	7616	3050	11844	8370	3939	11466	8094	4148	10710	7542	4441	10332	7266	4609	
	18.0	25	15043	10982	3450	12370	8873	2595	11401	8245	3085	12600	9106	3981	12096	8738	4148	11340	8186	4483	10836	7818	4651	
	19.0	27	15550	11352	3502	12800	9344	2628	11832	8637	3120	13104	9566	4022	12600	9198	4190	11844	8646	4483	11340	8278	4651	
	22.0	30	17240	11228	3502	14198	9265	2628	13122	8559	3120	14490	9474	4064	13986	9106	4232	12600	8830	4651	11718	8646	4902	
	24.0	32	18424	11228	3555	15166	9265	2661	13983	8559	3155	15498	9474	4064	14868	9106	4274	13104	9014	4777	11970	8922	5070	
(1.2+2.5+3.5) + (1.2+2.5+2.5)	12.0	18	13918	9548	3286	10030	8101	2483	9284	7478	2926	10250	8304	3786	9875	7939	3950	9250	7483	4238	8875	7118	4403	
	14.0	20	13918	9548	3286	10777	8101	2483	10030	7556	2961	11000	8304	3827	10625	8030	3992	9875	7483	4280	9500	7209	4485	
	16.0	22	13918	10160	3337	11524	8101	2516	10671	7556	2995	11750	8304	3868	11375	8030	4074	10625	7483	4362	10250	7209	4527	
	18.0	25	14924	10894	3388	12271	8802	2548	11311	8179	3029	12500	9034	3909	12000	8669	4074	11250	8121	4403	10750	7756	4568	
	19.0	27	15427	11262	3440	12698	9270	2581	11738	8569	3064	13000	9490	3950	12500	9125	4115	11750	8578	4403	11250	8213	4568	
	22.0	30	17104	11139	3440	14085	9192	2581	13018	8491	3064	14375	9399	3992	13875	9034	4156	12500	8760	4568	11625	8578	4815	
	24.0	32	18277	11139	3491	15046	9192	2614	13872	8491	3098	15375	9399	3992	14750	9034	4197	13000	8943	4691	11875	8851	4979	
(1.2+2.5+3.5) + (1.2+2.5+3.5)	12.0	18	14029	9624	3345	10111	8166	2528	9358	7538	2979	10332	8370	3855	9954	8002	4022	9324	7542	4316	8946	7174	4483	
	14.0	20	14029	9624	3345	10864	8166	2528	10111	7616	3015	11088	8370	3897	10710	8094	4064	9954	7542	4358	9576	7266	4567	
	16.0	22	14029	10241	3398	11617	8166	2561	10756	7616	3050	11844	8370	3939	11466	8094	4148	10710	7542	4441	10332	7266	4609	
	18.0	25	15043	10982	3450	12370	8873	2595	11401	8245	3085	12600	9106	3981	12096	8738	4148	11340	8186	4483	10836	7818	4651	
	19.0	27	15550	11352	3502	12800	9344	2628	11832	8637	3120	13104	9566	4022	12600	9198	4190	11844	8646	4483	11340	8278	4651	
	22.0	30	17240	11228	3502	14198	9265	2628	13122	8559	3120	14490	9474	4064	13986	9106	4232	12600	8830	4651	11718	8646	4902	
	24.0	32	18424	11228	3555	15166	9265	2661	13983	8559	3155	15498	9474	4064	14868	9106	4274	13104	9014	4777	11970	8922	5070	
(1.2+2.5+3.5) + (1.2+3.5+3.5)	12.0	18	14029	9624	3345	10111	8166	2528	9358	7538	2979	10332	8370	3855	9954	8002	4022	9324	7542	4316	8946	7174	4483	
	14.0	20	14029	9624	3345	10864	8166	2528	10111	7616	3015	11088	8370	3897	10710	8094	4064	9954	7542	4358	9576	7266	4567	
	16.0	22	14029	10241	3398	11617	8166	2561	10756	7616	3050	11844	8370	3939	11466	8094	4148	10710	7542	4441	10332	7266	4609	
	18.0	25	15043	10982	3450	12370	8873	2595	11401	8245	3085	12600	9106	3981	12096	8738	4148	11340	8186	4483	10836	7818	4651	
	19.0	27	15550	11352	3502	12800	9344	2628	11832	8637	3120	13104	9566	4022	12600	9198	4190	11844	8646	4483	11340	8278	4651	
	22.0	30	17240	11228	3502	14198	9265	2628	13122	8559	3120	14490	9474	4064	13986	9106	4232	12600	8830	4651	11718	8646	4902	
	24.0	32	18424	11228	3555	15166	9265	2661	13983	8559	3155	15498	9474	4064	14868	9106	4274	13104	9014	4777	11970	8922	5070	
(1.2+2.5+3.5) + (1.8+1.8+1.8)	12.0	18	13027	8937	3094	9389	7583	2338	8689	6999	2756	9594	7772	3565	9243	7431	3720	8658	7004	3991	8307	6662	4146	
	14.0	20	13027	8937	3094	10088	7583	2338	9389	7072	2788	10296	7772	3604	9945	7516	3759	9243	7004	4030	8892	6747	4224	
	16.0	22	13027	9510	3142	10787	7583	2369	9988	7072	2820	10998	7772	3643	10647	7516	3836	9945	7004	4108	9594	6747	4263	
	18.0	25	13969	10197	3191	11486	8239	2400	10587	7656	2853	11700	8456	3681	11232	8114	3836	10530	7601	4146	10062	7260	4301	
	19.0	27	14440	10541	3239	11885	8676	2430	10987	8020	2885	12168	8883	3720	11700	8541	3875	10998	8029	4146	10530	7687	4301	
	22.0	30	16009	10426	3239	13184	8603	2430	12185	7947	2885	13455	8797	3759	12987	8456	3914	11700	8199	4301	10881	8029	4534	
	24.0	32	17108	10426	3287	14083	8603	2461	12984	7947	2918	14391	8797	3759	13806	8456	3953	12168	8370	4418	11115	8285	4689	
(1.2+2.5+3.5) + (1.8+1.8+2.5)	12.0	18	13806	9471	3286	9950	8036	2483	9209	7418	2926	10168	8237	3786	9796	7875	3950	9176	7423	4238	8804	7061	4403	
	14.0	20	13806	9471	3286	10691	8036	2483	9950	7495	2961	10912	8237	3827	10540	7966	3992	9796	7423	4280	9424	7151	4485	
	16.0	22	13806	10079	3337	11432	8036	2516	10585	7495	2995	11656	8237	3868	11284	7966	4074	10540	7423	4362	10168	7151	4527	
	18.0	25	14804	10807	3388	12173	8732	2548	11220	8114	3029	12400	8961	3909	11904	8599	4074	11160	8056	4403	10664	7694	4568	
	19.0	27	15303	11171	3440	12597	9196	2581	11644	8500	3064	12896	9414	3950	12400	9052	4115	11656	8509	4403	11160	8147	4568	
	22.0	30	16967	11050	3440	13973	9118	2581	12914	8423	3064	14260	9324	3992	13764	8961	4156	12400	8690	4568	11532	8509	4815	
	24.0	32	18131	11050	3491	14925	9118	2614	13761	8423	3098	15252	9324	3992	14632	8961	4197	12896	8871	4691	11780	8780	4979	
(1.2+2.5+3.5) + (1.8+1.8+3.5)	12.0	18	14029	9624	3345	10111	8166	2528	9358	7538	2979	10332	8370	3855	9954	8002	4022	9324	7542	4316	8946	7174	4483	
	14.0	20	14029	9624	3345	10864	8166	2528	10111	7616	3015	11088	8370	3897	10710	8094	4064	9954	7542	4358	9576	7266	4567	
	16.0	22	14029	10241	3398	11617	8166	2561	10756	7616	3050	11844	8370	3939	11466	8094	4148	10710	7542	4441	10332	7266	4609	
	18.0	25	15043	10982	3450	12370	8873	2595	11401	8245	3085	12600	9106	3981	12096	8738	4148	11340	8186	4483	10836	7818	4651	
	19.0	27	15550	11352	3502	12800	9344	2628	11832	8637	3120	13104	9566	4022	12600	9198	4190	11844	8646	4483	11340	8278	4651	
	22.0	30	17240	11228	3502	14198	9265	2628	13122	8559	3120	14490	9474	4064	13986	9106	4232	12600	8830	4651	11718	8646	4902	
	24.0	32	18424	11228	3555	15166	9265	2661	13983	8559	3155	15498	9474	4064	14868	9106	4274	13104	9014	4777	11970	8922	5070	

	INDOOR		OUTDOOR TEMPERATURE (°CDB)																			
	EWB	EDB	-10			21			27			32			35			40			43		
	°C	°C	TC	SHC	PI	TC	SHC	PI	TC	SHC	PI	TC	SHC	PI	TC	SHC	PI	TC	SHC	PI	TC	SHC	PI
(1.2+2.5+3.5) + (1.8+1.8+5)	12.0	18	14029	9624	3345	10111	8166	2528	9358	7538	2979	10332	8370	3855	9954	8002	4022	9324	7542	4316	8946	7174	4483
	14.0	20	14029	9624	3345	10864	8166	2528	10111	7616	3015	11088	8370	3897	10710	8094	4064	9954	7542	4358	9576	7266	4567
	16.0	22	14029	10241	3398	11617	8166	2561	10756	7616	3050	11844	8370	3939	11466	8094	4148	10710	7542	4441	10332	7266	4609
	18.0	25	15043	10982	3450	12370	8873	2595	11401	8245	3085	12600	9106	3981	12096	8738	4148	11340	8186	4483	10836	7818	4651
	19.0	27	15550	11352	3502	12800	9344	2628	11832	8637	3120	13104	9566	4022	12600	9198	4190	11844	8646	4483	11340	8278	4651
	22.0	30	17240	11228	3502	14198	9265	2628	13122	8559	3120	14490	9474	4064	13986	9106	4232	12600	8830	4651	11718	8646	4902
	24.0	32	18424	11228	3555	15166	9265	2661	13983	8559	3155	15498	9474	4064	14868	9106	4274	13104	9014	4777	11970	8922	5070
(1.2+2.5+3.5) + (1.8+2.5+2.5)	12.0	18	14029	9624	3345	10111	8166	2528	9358	7538	2979	10332	8370	3855	9954	8002	4022	9324	7542	4316	8946	7174	4483
	14.0	20	14029	9624	3345	10864	8166	2528	10111	7616	3015	11088	8370	3897	10710	8094	4064	9954	7542	4358	9576	7266	4567
	16.0	22	14029	10241	3398	11617	8166	2561	10756	7616	3050	11844	8370	3939	11466	8094	4148	10710	7542	4441	10332	7266	4609
	18.0	25	15043	10982	3450	12370	8873	2595	11401	8245	3085	12600	9106	3981	12096	8738	4148	11340	8186	4483	10836	7818	4651
	19.0	27	15550	11352	3502	12800	9344	2628	11832	8637	3120	13104	9566	4022	12600	9198	4190	11844	8646	4483	11340	8278	4651
	22.0	30	17240	11228	3502	14198	9265	2628	13122	8559	3120	14490	9474	4064	13986	9106	4232	12600	8830	4651	11718	8646	4902
	24.0	32	18424	11228	3555	15166	9265	2661	13983	8559	3155	15498	9474	4064	14868	9106	4274	13104	9014	4777	11970	8922	5070
(1.2+2.5+3.5) + (1.8+2.5+3.5)	12.0	18	14029	9624	3345	10111	8166	2528	9358	7538	2979	10332	8370	3855	9954	8002	4022	9324	7542	4316	8946	7174	4483
	14.0	20	14029	9624	3345	10864	8166	2528	10111	7616	3015	11088	8370	3897	10710	8094	4064	9954	7542	4358	9576	7266	4567
	16.0	22	14029	10241	3398	11617	8166	2561	10756	7616	3050	11844	8370	3939	11466	8094	4148	10710	7542	4441	10332	7266	4609
	18.0	25	15043	10982	3450	12370	8873	2595	11401	8245	3085	12600	9106	3981	12096	8738	4148	11340	8186	4483	10836	7818	4651
	19.0	27	15550	11352	3502	12800	9344	2628	11832	8637	3120	13104	9566	4022	12600	9198	4190	11844	8646	4483	11340	8278	4651
	22.0	30	17240	11228	3502	14198	9265	2628	13122	8559	3120	14490	9474	4064	13986	9106	4232	12600	8830	4651	11718	8646	4902
	24.0	32	18424	11228	3555	15166	9265	2661	13983	8559	3155	15498	9474	4064	14868	9106	4274	13104	9014	4777	11970	8922	5070
(1.2+2.5+3.5) + (1.8+3.5+3.5)	12.0	18	14029	9624	3345	10111	8166	2528	9358	7538	2979	10332	8370	3855	9954	8002	4022	9324	7542	4316	8946	7174	4483
	14.0	20	14029	9624	3345	10864	8166	2528	10111	7616	3015	11088	8370	3897	10710	8094	4064	9954	7542	4358	9576	7266	4567
	16.0	22	14029	10241	3398	11617	8166	2561	10756	7616	3050	11844	8370	3939	11466	8094	4148	10710	7542	4441	10332	7266	4609
	18.0	25	15043	10982	3450	12370	8873	2595	11401	8245	3085	12600	9106	3981	12096	8738	4148	11340	8186	4483	10836	7818	4651
	19.0	27	15550	11352	3502	12800	9344	2628	11832	8637	3120	13104	9566	4022	12600	9198	4190	11844	8646	4483	11340	8278	4651
	22.0	30	17240	11228	3502	14198	9265	2628	13122	8559	3120	14490	9474	4064	13986	9106	4232	12600	8830	4651	11718	8646	4902
	24.0	32	18424	11228	3555	15166	9265	2661	13983	8559	3155	15498	9474	4064	14868	9106	4274	13104	9014	4777	11970	8922	5070
(1.2+2.5+3.5) + (2.5+2.5+2.5)	12.0	18	14029	9624	3345	10111	8166	2528	9358	7538	2979	10332	8370	3855	9954	8002	4022	9324	7542	4316	8946	7174	4483
	14.0	20	14029	9624	3345	10864	8166	2528	10111	7616	3015	11088	8370	3897	10710	8094	4064	9954	7542	4358	9576	7266	4567
	16.0	22	14029	10241	3398	11617	8166	2561	10756	7616	3050	11844	8370	3939	11466	8094	4148	10710	7542	4441	10332	7266	4609
	18.0	25	15043	10982	3450	12370	8873	2595	11401	8245	3085	12600	9106	3981	12096	8738	4148	11340	8186	4483	10836	7818	4651
	19.0	27	15550	11352	3502	12800	9344	2628	11832	8637	3120	13104	9566	4022	12600	9198	4190	11844	8646	4483	11340	8278	4651
	22.0	30	17240	11228	3502	14198	9265	2628	13122	8559	3120	14490	9474	4064	13986	9106	4232	12600	8830	4651	11718	8646	4902
	24.0	32	18424	11228	3555	15166	9265	2661	13983	8559	3155	15498	9474	4064	14868	9106	4274	13104	9014	4777	11970	8922	5070
(1.2+2.5+3.5) + (2.5+2.5+3.5)	12.0	18	14029	9624	3345	10111	8166	2528	9358	7538	2979	10332	8370	3855	9954	8002	4022	9324	7542	4316	8946	7174	4483
	14.0	20	14029	9624	3345	10864	8166	2528	10111	7616	3015	11088	8370	3897	10710	8094	4064	9954	7542	4358	9576	7266	4567
	16.0	22	14029	10241	3398	11617	8166	2561	10756	7616	3050	11844	8370	3939	11466	8094	4148	10710	7542	4441	10332	7266	4609
	18.0	25	15043	10982	3450	12370	8873	2595	11401	8245	3085	12600	9106	3981	12096	8738	4148	11340	8186	4483	10836	7818	4651
	19.0	27	15550	11352	3502	12800	9344	2628	11832	8637	3120	13104	9566	4022	12600	9198	4190	11844	8646	4483	11340	8278	4651
	22.0	30	17240	11228	3502	14198	9265	2628	13122	8559	3120	14490	9474	4064	13986	9106	4232	12600	8830	4651	11718	8646	4902
	24.0	32	18424	11228	3555	15166	9265	2661	13983	8559	3155	15498	9474	4064	14868	9106	4274	13104	9014	4777	11970	8922	5070
(1.2+3.5+3.5) + (1.2+1.2+1.2)	12.0	18	11023	7562	2535	7944	6416	1916	7353	5923	2258	8118	6577	2921	7821	6287	3048	7326	5926	3270	7029	5637	3397
	14.0	20	11023	7562	2535	8536	6416	1916	7944	5984	2284	8712	6577	2953	8415	6360	3080	7821	5926	3302	7524	5709	3461
	16.0	22	11023	8047	2575	9127	6416	1941	8451	5984	2311	9306	6577	2985	9009	6360	3143	8415	5926	3366	8118	5709	3493
	18.0	25	11820	8628	2614	9719	6971	1966	8958	6478	2337	9900	7155	3016	9504	6866	3143	8910	6432	3397	8514	6143	3524
	19.0	27	12218	8919	2654	10057	7342	1991	9296	6786	2364	10296	7516	3048	9900	7227	3175	9306	6793	3397	8910	6504	3524
	22.0	30	13546	8822	2654	11156	7280	1991	10310	6725	2364	11385	7444	3080	10989	7155	3207	9900	6938	3524	9207	6793	3715
	24.0	32	14476	8822	2693	11916	7280	2017	10987	6725	2391	12177	7444	3080	11682	7155	3239	10296	7082	3620	9405	7010	3842

	INDOOR		OUTDOOR TEMPERATURE (°CDB)																				
	EWB	EDB	-10			21			27			32			35			40			43		
	°C	°C	TC	SHC	PI	TC	SHC	PI	TC	SHC	PI	TC	SHC	PI	TC	SHC	PI	TC	SHC	PI	TC	SHC	PI
(1.2+3.5+3.5) + (1.2+1.2+1.8)	12.0	18	11691	8020	2671	8426	6805	2018	7798	6282	2379	8610	6975	3077	8295	6669	3211	7770	6285	3445	7455	5979	3579
	14.0	20	11691	8020	2671	9053	6805	2018	8426	6347	2407	9240	6975	3111	8925	6745	3245	8295	6285	3479	7980	6055	3646
	16.0	22	11691	8534	2713	9680	6805	2045	8963	6347	2435	9870	6975	3144	9555	6745	3312	8925	6285	3546	8610	6055	3680
	18.0	25	12536	9151	2754	10308	7394	2071	9501	6870	2463	10500	7588	3178	10080	7282	3312	9450	6822	3579	9030	6515	3713
	19.0	27	12959	9460	2796	10666	7787	2098	9860	7198	2491	10920	7972	3211	10500	7665	3345	9870	7205	3579	9450	6899	3713
	22.0	30	14367	9357	2796	11832	7721	2098	10935	7132	2491	12075	7895	3245	11655	7588	3378	10500	7358	3713	9765	7205	3914
	24.0	32	15353	9357	2838	12638	7721	2124	11652	7132	2519	12915	7895	3245	12390	7588	3412	10920	7512	3813	9975	7435	4047
(1.2+3.5+3.5) + (1.2+1.2+2.5)	12.0	18	12470	8555	2830	8987	7259	2139	8318	6700	2521	9184	7440	3261	8848	7113	3403	8288	6704	3651	7952	6377	3793
	14.0	20	12470	8555	2830	9657	7259	2139	8987	6770	2550	9856	7440	3297	9520	7195	3439	8848	6704	3687	8512	6459	3864
	16.0	22	12470	9103	2875	10326	7259	2167	9561	6770	2580	10528	7440	3332	10192	7195	3510	9520	6704	3758	9184	6459	3900
	18.0	25	13372	9761	2919	10995	7887	2195	10135	7328	2610	11200	8094	3368	10752	7767	3510	10080	7277	3793	9632	6950	3935
	19.0	27	13822	10090	2963	11378	8306	2223	10517	7677	2639	11648	8503	3403	11200	8176	3545	10528	7685	3793	10080	7358	3935
	22.0	30	15325	9981	2963	12620	8236	2223	11664	7608	2639	12880	8421	3439	12432	8094	3580	11200	7849	3935	10416	7685	4148
	24.0	32	16377	9981	3007	13481	8236	2252	12429	7608	2669	13776	8421	3439	13216	8094	3616	11648	8012	4041	10640	7931	4289
(1.2+3.5+3.5) + (1.2+1.2+3.5)	12.0	18	13584	9319	2890	9790	7907	2184	9061	7299	2574	10004	8104	3330	9638	7748	3475	9028	7303	3729	8662	6947	3873
	14.0	20	13584	9319	2890	10519	7907	2184	9790	7375	2604	10736	8104	3367	10370	7837	3511	9638	7303	3765	9272	7036	3946
	16.0	22	13584	9916	2936	11248	7907	2213	10415	7375	2635	11468	8104	3403	11102	7837	3584	10370	7303	3837	10004	7036	3982
	18.0	25	14566	10633	2981	11977	8591	2242	11040	7983	2665	12200	8817	3439	11712	8461	3584	10980	7926	3873	10492	7570	4018
	19.0	27	15057	10991	3026	12393	9047	2270	11456	8363	2695	12688	9262	3475	12200	8906	3620	11468	8372	3873	10980	8015	4018
	22.0	30	16693	10872	3026	13747	8971	2270	12706	8287	2695	14030	9173	3511	13542	8817	3656	12200	8550	4018	11346	8372	4235
	24.0	32	17839	10872	3071	14685	8971	2299	13539	8287	2726	15006	9173	3511	14396	8817	3692	12688	8728	4127	11590	8639	4380
(1.2+3.5+3.5) + (1.2+1.2+5)	12.0	18	14029	9624	3345	10111	8166	2528	9358	7538	2979	10332	8370	3855	9954	8002	4022	9324	7542	4316	8946	7174	4483
	14.0	20	14029	9624	3345	10864	8166	2528	10111	7616	3015	11088	8370	3897	10710	8094	4064	9954	7542	4358	9576	7266	4567
	16.0	22	14029	10241	3398	11617	8166	2561	10756	7616	3050	11844	8370	3939	11466	8094	4148	10710	7542	4441	10332	7266	4609
	18.0	25	15043	10982	3450	12370	8873	2595	11401	8245	3085	12600	9106	3981	12096	8738	4148	11340	8186	4483	10836	7818	4651
	19.0	27	15550	11352	3502	12800	9344	2628	11832	8637	3120	13104	9566	4022	12600	9198	4190	11844	8646	4483	11340	8278	4651
	22.0	30	17240	11228	3502	14198	9265	2628	13122	8559	3120	14490	9474	4064	13986	9106	4232	12600	8830	4651	11718	8646	4902
	24.0	32	18424	11228	3555	15166	9265	2661	13983	8559	3155	15498	9474	4064	14868	9106	4274	13104	9014	4777	11970	8922	5070
(1.2+3.5+3.5) + (1.2+1.8+1.8)	12.0	18	12359	8479	2807	8907	7194	2121	8244	6641	2500	9102	7374	3234	8769	7050	3374	8214	6644	3620	7881	6320	3761
	14.0	20	12359	8479	2807	9570	7194	2121	8907	6710	2529	9768	7374	3269	9435	7131	3410	8769	6644	3656	8436	6401	3831
	16.0	22	12359	9022	2850	10234	7194	2149	9476	6710	2558	10434	7374	3304	10101	7131	3480	9435	6644	3726	9102	6401	3867
	18.0	25	13252	9674	2894	10897	7816	2177	10044	7263	2588	11100	8022	3339	10656	7698	3480	9990	7212	3761	9546	6888	3902
	19.0	27	13699	10000	2938	11276	8231	2205	10423	7609	2617	11544	8427	3374	11100	8103	3515	10434	7617	3761	9990	7293	3902
	22.0	30	15188	9892	2938	12508	8162	2205	11560	7540	2617	12765	8346	3410	12321	8022	3550	11100	7779	3902	10323	7617	4113
	24.0	32	16230	9892	2982	13361	8162	2232	12318	7540	2647	13653	8346	3410	13098	8022	3585	11544	7941	4007	10545	7860	4253
(1.2+3.5+3.5) + (1.2+1.8+2.5)	12.0	18	13138	9013	3094	9469	7648	2338	8764	7059	2756	9676	7839	3565	9322	7494	3720	8732	7063	3991	8378	6719	4146
	14.0	20	13138	9013	3094	10174	7648	2338	9469	7133	2788	10384	7839	3604	10030	7580	3759	9322	7063	4030	8968	6805	4224
	16.0	22	13138	9591	3142	10879	7648	2369	10073	7133	2820	11092	7839	3643	10738	7580	3836	10030	7063	4108	9676	6805	4263
	18.0	25	14088	10284	3191	11584	8309	2400	10678	7721	2853	11800	8528	3681	11328	8183	3836	10620	7666	4146	10148	7322	4301
	19.0	27	14563	10631	3239	11987	8751	2430	11080	8089	2885	12272	8959	3720	11800	8614	3875	11092	8097	4146	10620	7753	4301
	22.0	30	16146	10515	3239	13297	8677	2430	12289	8015	2885	13570	8872	3759	13098	8528	3914	11800	8269	4301	10974	8097	4534
	24.0	32	17254	10515	3287	14203	8677	2461	13095	8015	2918	14514	8872	3759	13924	8528	3953	12272	8442	4418	11210	8356	4689
(1.2+3.5+3.5) + (1.2+1.8+3.5)	12.0	18	14029	9624	3286	10111	8166	2483	9358	7538	2926	10332	8370	3786	9954	8002	3950	9324	7542	4238	8946	7174	4403
	14.0	20	14029	9624	3286	10864	8166	2483	10111	7616	2961	11088	8370	3827	10710	8094	3992	9954	7542	4280	9576	7266	4485
	16.0	22	14029	10241	3337	11617	8166	2516	10756	7616	2995	11844	8370	3868	11466	8094	4074	10710	7542	4362	10332	7266	4527
	18.0	25	15043	10982	3388	12370	8873	2548	11401	8245	3029	12600	9106	3909	12096	8738	4074	11340	8186	4403	10836	7818	4568
	19.0	27	15550	11352	3440	12800	9344	2581	11832	8637	3064	13104	9566	3950	12600	9198	4115	11844	8646	4403	11340	8278	4568
	22.0	30	17240	11228	3440	14198	9265	2581	13122	8559	3064	14490	9474	3992	13986	9106	4156	12600	8830	4568	11718	8646	4815
	24.0	32	18424	11228	3491	15166	9265	2614	13983	8559	3098	15498	9474	3992	14868	9106	4197	13104	9014	4691	11970	8922	4979

	INDOOR		OUTDOOR TEMPERATURE (°CDB)																				
	EWB	EDB	-10			21			27			32			35			40			43		
	°C	°C	TC	SHC	PI	TC	SHC	PI	TC	SHC	PI	TC	SHC	PI	TC	SHC	PI	TC	SHC	PI	TC	SHC	PI
(1.2+3.5+3.5) + (1.2+1.8+5)	12.0	18	14029	9624	3345	10111	8166	2528	9358	7538	2979	10332	8370	3855	9954	8002	4022	9324	7542	4316	8946	7174	4483
	14.0	20	14029	9624	3345	10864	8166	2528	10111	7616	3015	11088	8370	3897	10710	8094	4064	9954	7542	4358	9576	7266	4567
	16.0	22	14029	10241	3398	11617	8166	2561	10756	7616	3050	11844	8370	3939	11466	8094	4148	10710	7542	4441	10332	7266	4609
	18.0	25	15043	10982	3450	12370	8873	2595	11401	8245	3085	12600	9106	3981	12096	8738	4148	11340	8186	4483	10836	7818	4651
	19.0	27	15550	11352	3502	12800	9344	2628	11832	8637	3120	13104	9566	4022	12600	9198	4190	11844	8646	4483	11340	8278	4651
	22.0	30	17240	11228	3502	14198	9265	2628	13122	8559	3120	14490	9474	4064	13986	9106	4232	12600	8830	4651	11718	8646	4902
	24.0	32	18424	11228	3555	15166	9265	2661	13983	8559	3155	15498	9474	4064	14868	9106	4274	13104	9014	4777	11970	8922	5070
(1.2+3.5+3.5) + (1.2+2.5+2.5)	12.0	18	13918	9548	3286	10030	8101	2483	9284	7478	2926	10250	8304	3786	9875	7939	3950	9250	7483	4238	8875	7118	4403
	14.0	20	13918	9548	3286	10777	8101	2483	10030	7556	2961	11000	8304	3827	10625	8030	3992	9875	7483	4280	9500	7209	4485
	16.0	22	13918	10160	3337	11524	8101	2516	10671	7556	2995	11750	8304	3868	11375	8030	4074	10625	7483	4362	10250	7209	4527
	18.0	25	14924	10894	3388	12271	8802	2548	11311	8179	3029	12500	9034	3909	12000	8669	4074	11250	8121	4403	10750	7756	4568
	19.0	27	15427	11262	3440	12698	9270	2581	11738	8569	3064	13000	9490	3950	12500	9125	4115	11750	8578	4403	11250	8213	4568
	22.0	30	17104	11139	3440	14085	9192	2581	13018	8491	3064	14375	9399	3992	13875	9034	4156	12500	8760	4568	11625	8578	4815
	24.0	32	18277	11139	3491	15046	9192	2614	13872	8491	3098	15375	9399	3992	14750	9034	4197	13000	8943	4691	11875	8851	4979
(1.2+3.5+3.5) + (1.2+2.5+3.5)	12.0	18	14029	9624	3345	10111	8166	2528	9358	7538	2979	10332	8370	3855	9954	8002	4022	9324	7542	4316	8946	7174	4483
	14.0	20	14029	9624	3345	10864	8166	2528	10111	7616	3015	11088	8370	3897	10710	8094	4064	9954	7542	4358	9576	7266	4567
	16.0	22	14029	10241	3398	11617	8166	2561	10756	7616	3050	11844	8370	3939	11466	8094	4148	10710	7542	4441	10332	7266	4609
	18.0	25	15043	10982	3450	12370	8873	2595	11401	8245	3085	12600	9106	3981	12096	8738	4148	11340	8186	4483	10836	7818	4651
	19.0	27	15550	11352	3502	12800	9344	2628	11832	8637	3120	13104	9566	4022	12600	9198	4190	11844	8646	4483	11340	8278	4651
	22.0	30	17240	11228	3502	14198	9265	2628	13122	8559	3120	14490	9474	4064	13986	9106	4232	12600	8830	4651	11718	8646	4902
	24.0	32	18424	11228	3555	15166	9265	2661	13983	8559	3155	15498	9474	4064	14868	9106	4274	13104	9014	4777	11970	8922	5070
(1.2+3.5+3.5) + (1.2+3.5+3.5)	12.0	18	14029	9624	3345	10111	8166	2528	9358	7538	2979	10332	8370	3855	9954	8002	4022	9324	7542	4316	8946	7174	4483
	14.0	20	14029	9624	3345	10864	8166	2528	10111	7616	3015	11088	8370	3897	10710	8094	4064	9954	7542	4358	9576	7266	4567
	16.0	22	14029	10241	3398	11617	8166	2561	10756	7616	3050	11844	8370	3939	11466	8094	4148	10710	7542	4441	10332	7266	4609
	18.0	25	15043	10982	3450	12370	8873	2595	11401	8245	3085	12600	9106	3981	12096	8738	4148	11340	8186	4483	10836	7818	4651
	19.0	27	15550	11352	3502	12800	9344	2628	11832	8637	3120	13104	9566	4022	12600	9198	4190	11844	8646	4483	11340	8278	4651
	22.0	30	17240	11228	3502	14198	9265	2628	13122	8559	3120	14490	9474	4064	13986	9106	4232	12600	8830	4651	11718	8646	4902
	24.0	32	18424	11228	3555	15166	9265	2661	13983	8559	3155	15498	9474	4064	14868	9106	4274	13104	9014	4777	11970	8922	5070
(1.2+3.5+3.5) + (1.8+1.8+1.8)	12.0	18	13027	8937	3094	9389	7583	2338	8689	6999	2756	9594	7772	3565	9243	7431	3720	8658	7004	3991	8307	6662	4146
	14.0	20	13027	8937	3094	10088	7583	2338	9389	7072	2788	10296	7772	3604	9945	7516	3759	9243	7004	4030	8892	6747	4224
	16.0	22	13027	9510	3142	10787	7583	2369	9988	7072	2820	10998	7772	3643	10647	7516	3836	9945	7004	4108	9594	6747	4263
	18.0	25	13969	10197	3191	11486	8239	2400	10587	7656	2853	11700	8456	3681	11232	8114	3836	10530	7601	4146	10062	7260	4301
	19.0	27	14440	10541	3239	11885	8676	2430	10987	8020	2885	12168	8883	3720	11700	8541	3875	10998	8029	4146	10530	7687	4301
	22.0	30	16009	10426	3239	13184	8603	2430	12185	7947	2885	13455	8797	3759	12987	8456	3914	11700	8199	4301	10881	8029	4534
	24.0	32	17108	10426	3287	14083	8603	2461	12984	7947	2918	14391	8797	3759	13806	8456	3953	12168	8370	4418	11115	8285	4689
(1.2+3.5+3.5) + (1.8+1.8+2.5)	12.0	18	13806	9471	3286	9950	8036	2483	9209	7418	2926	10168	8237	3786	9796	7875	3950	9176	7423	4238	8804	7061	4403
	14.0	20	13806	9471	3286	10691	8036	2483	9950	7495	2961	10912	8237	3827	10540	7966	3992	9796	7423	4280	9424	7151	4485
	16.0	22	13806	10079	3337	11432	8036	2516	10585	7495	2995	11656	8237	3868	11284	7966	4074	10540	7423	4362	10168	7151	4527
	18.0	25	14804	10807	3388	12173	8732	2548	11220	8114	3029	12400	8961	3909	11904	8599	4074	11160	8056	4403	10664	7694	4568
	19.0	27	15303	11171	3440	12597	9196	2581	11644	8500	3064	12896	9414	3950	12400	9052	4115	11656	8509	4403	11160	8147	4568
	22.0	30	16967	11050	3440	13973	9118	2581	12914	8423	3064	14260	9324	3992	13764	8961	4156	12400	8690	4568	11532	8509	4815
	24.0	32	18131	11050	3491	14925	9118	2614	13761	8423	3098	15252	9324	3992	14632	8961	4197	12896	8871	4691	11780	8780	4979
(1.2+3.5+3.5) + (1.8+1.8+3.5)	12.0	18	14029	9624	3345	10111	8166	2528	9358	7538	2979	10332	8370	3855	9954	8002	4022	9324	7542	4316	8946	7174	4483
	14.0	20	14029	9624	3345	10864	8166	2528	10111	7616	3015	11088	8370	3897	10710	8094	4064	9954	7542	4358	9576	7266	4567
	16.0	22	14029	10241	3398	11617	8166	2561	10756	7616	3050	11844	8370	3939	11466	8094	4148	10710	7542	4441	10332	7266	4609
	18.0	25	15043	10982	3450	12370	8873	2595	11401	8245	3085	12600	9106	3981	12096	8738	4148	11340	8186	4483	10836	7818	4651
	19.0	27	15550	11352	3502	12800	9344	2628	11832	8637	3120	13104	9566	4022	12600	9198	4190	11844	8646	4483	11340	8278	4651
	22.0	30	17240	11228	3502	14198	9265	2628	13122	8559	3120	14490	9474	4064	13986	9106	4232	12600	8830	4651	11718	8646	4902
	24.0	32	18424	11228	3555	15166	9265	2661	13983	8559	3155	15498	9474	4064	14868	9106	4274	13104	9014	4777	11970	8922	5070

	INDOOR		OUTDOOR TEMPERATURE (°CDB)																				
	EWB	EDB	-10			21			27			32			35			40			43		
	°C	°C	TC	SHC	PI	TC	SHC	PI	TC	SHC	PI	TC	SHC	PI	TC	SHC	PI	TC	SHC	PI	TC	SHC	PI
(1.2+3.5+3.5) + (1.8+1.8+5)	12.0	18	14029	9624	3345	10111	8166	2528	9358	7538	2979	10332	8370	3855	9954	8002	4022	9324	7542	4316	8946	7174	4483
	14.0	20	14029	9624	3345	10864	8166	2528	10111	7616	3015	11088	8370	3897	10710	8094	4064	9954	7542	4358	9576	7266	4567
	16.0	22	14029	10241	3398	11617	8166	2561	10756	7616	3050	11844	8370	3939	11466	8094	4148	10710	7542	4441	10332	7266	4609
	18.0	25	15043	10982	3450	12370	8873	2595	11401	8245	3085	12600	9106	3981	12096	8738	4148	11340	8186	4483	10836	7818	4651
	19.0	27	15550	11352	3502	12800	9344	2628	11832	8637	3120	13104	9566	4022	12600	9198	4190	11844	8646	4483	11340	8278	4651
	22.0	30	17240	11228	3502	14198	9265	2628	13122	8559	3120	14490	9474	4064	13986	9106	4232	12600	8830	4651	11718	8646	4902
	24.0	32	18424	11228	3555	15166	9265	2661	13983	8559	3155	15498	9474	4064	14868	9106	4274	13104	9014	4777	11970	8922	5070
(1.2+3.5+3.5) + (1.8+2.5+2.5)	12.0	18	14029	9624	3345	10111	8166	2528	9358	7538	2979	10332	8370	3855	9954	8002	4022	9324	7542	4316	8946	7174	4483
	14.0	20	14029	9624	3345	10864	8166	2528	10111	7616	3015	11088	8370	3897	10710	8094	4064	9954	7542	4358	9576	7266	4567
	16.0	22	14029	10241	3398	11617	8166	2561	10756	7616	3050	11844	8370	3939	11466	8094	4148	10710	7542	4441	10332	7266	4609
	18.0	25	15043	10982	3450	12370	8873	2595	11401	8245	3085	12600	9106	3981	12096	8738	4148	11340	8186	4483	10836	7818	4651
	19.0	27	15550	11352	3502	12800	9344	2628	11832	8637	3120	13104	9566	4022	12600	9198	4190	11844	8646	4483	11340	8278	4651
	22.0	30	17240	11228	3502	14198	9265	2628	13122	8559	3120	14490	9474	4064	13986	9106	4232	12600	8830	4651	11718	8646	4902
	24.0	32	18424	11228	3555	15166	9265	2661	13983	8559	3155	15498	9474	4064	14868	9106	4274	13104	9014	4777	11970	8922	5070
(1.2+3.5+3.5) + (1.8+2.5+3.5)	12.0	18	14029	9624	3345	10111	8166	2528	9358	7538	2979	10332	8370	3855	9954	8002	4022	9324	7542	4316	8946	7174	4483
	14.0	20	14029	9624	3345	10864	8166	2528	10111	7616	3015	11088	8370	3897	10710	8094	4064	9954	7542	4358	9576	7266	4567
	16.0	22	14029	10241	3398	11617	8166	2561	10756	7616	3050	11844	8370	3939	11466	8094	4148	10710	7542	4441	10332	7266	4609
	18.0	25	15043	10982	3450	12370	8873	2595	11401	8245	3085	12600	9106	3981	12096	8738	4148	11340	8186	4483	10836	7818	4651
	19.0	27	15550	11352	3502	12800	9344	2628	11832	8637	3120	13104	9566	4022	12600	9198	4190	11844	8646	4483	11340	8278	4651
	22.0	30	17240	11228	3502	14198	9265	2628	13122	8559	3120	14490	9474	4064	13986	9106	4232	12600	8830	4651	11718	8646	4902
	24.0	32	18424	11228	3555	15166	9265	2661	13983	8559	3155	15498	9474	4064	14868	9106	4274	13104	9014	4777	11970	8922	5070
(1.2+3.5+3.5) + (1.8+3.5+3.5)	12.0	18	14029	9624	3345	10111	8166	2528	9358	7538	2979	10332	8370	3855	9954	8002	4022	9324	7542	4316	8946	7174	4483
	14.0	20	14029	9624	3345	10864	8166	2528	10111	7616	3015	11088	8370	3897	10710	8094	4064	9954	7542	4358	9576	7266	4567
	16.0	22	14029	10241	3398	11617	8166	2561	10756	7616	3050	11844	8370	3939	11466	8094	4148	10710	7542	4441	10332	7266	4609
	18.0	25	15043	10982	3450	12370	8873	2595	11401	8245	3085	12600	9106	3981	12096	8738	4148	11340	8186	4483	10836	7818	4651
	19.0	27	15550	11352	3502	12800	9344	2628	11832	8637	3120	13104	9566	4022	12600	9198	4190	11844	8646	4483	11340	8278	4651
	22.0	30	17240	11228	3502	14198	9265	2628	13122	8559	3120	14490	9474	4064	13986	9106	4232	12600	8830	4651	11718	8646	4902
	24.0	32	18424	11228	3555	15166	9265	2661	13983	8559	3155	15498	9474	4064	14868	9106	4274	13104	9014	4777	11970	8922	5070
(1.2+3.5+3.5) + (2.5+2.5+2.5)	12.0	18	14029	9624	3345	10111	8166	2528	9358	7538	2979	10332	8370	3855	9954	8002	4022	9324	7542	4316	8946	7174	4483
	14.0	20	14029	9624	3345	10864	8166	2528	10111	7616	3015	11088	8370	3897	10710	8094	4064	9954	7542	4358	9576	7266	4567
	16.0	22	14029	10241	3398	11617	8166	2561	10756	7616	3050	11844	8370	3939	11466	8094	4148	10710	7542	4441	10332	7266	4609
	18.0	25	15043	10982	3450	12370	8873	2595	11401	8245	3085	12600	9106	3981	12096	8738	4148	11340	8186	4483	10836	7818	4651
	19.0	27	15550	11352	3502	12800	9344	2628	11832	8637	3120	13104	9566	4022	12600	9198	4190	11844	8646	4483	11340	8278	4651
	22.0	30	17240	11228	3502	14198	9265	2628	13122	8559	3120	14490	9474	4064	13986	9106	4232	12600	8830	4651	11718	8646	4902
	24.0	32	18424	11228	3555	15166	9265	2661	13983	8559	3155	15498	9474	4064	14868	9106	4274	13104	9014	4777	11970	8922	5070
(1.2+3.5+3.5) + (2.5+2.5+3.5)	12.0	18	14029	9624	3345	10111	8166	2528	9358	7538	2979	10332	8370	3855	9954	8002	4022	9324	7542	4316	8946	7174	4483
	14.0	20	14029	9624	3345	10864	8166	2528	10111	7616	3015	11088	8370	3897	10710	8094	4064	9954	7542	4358	9576	7266	4567
	16.0	22	14029	10241	3398	11617	8166	2561	10756	7616	3050	11844	8370	3939	11466	8094	4148	10710	7542	4441	10332	7266	4609
	18.0	25	15043	10982	3450	12370	8873	2595	11401	8245	3085	12600	9106	3981	12096	8738	4148	11340	8186	4483	10836	7818	4651
	19.0	27	15550	11352	3502	12800	9344	2628	11832	8637	3120	13104	9566	4022	12600	9198	4190	11844	8646	4483	11340	8278	4651
	22.0	30	17240	11228	3502	14198	9265	2628	13122	8559	3120	14490	9474	4064	13986	9106	4232	12600	8830	4651	11718	8646	4902
	24.0	32	18424	11228	3555	15166	9265	2661	13983	8559	3155	15498	9474	4064	14868	9106	4274	13104	9014	4777	11970	8922	5070
(1.8+1.8+1.8) + (1.8+1.8+1.8)	12.0	18	12025	8249	2842	8666	6999	2148	8021	6461	2532	8856	7174	3275	8532	6859	3418	7992	6465	3667	7668	6150	3809
	14.0	20	12025	8249	2842	9312	6999	2148	8666	6528	2561	9504	7174	3311	9180	6938	3453	8532	6465	3702	8208	6228	3880
	16.0	22	12025	8778	2887	9957	6999	2176	9220	6528	2591	10152	7174	3346	9828	6938	3524	9180	6465	3774	8856	6228	3916
	18.0	25	12894	9413	2931	10602	7605	2205	9773	7067	2621	10800	7805	3382	10368	7490	3524	9720	7017	3809	9288	6701	3952
	19.0	27	13329	9730	2976	10971	8009	2233	10141	7403	2651	11232	8199	3418	10800	7884	3560	10152	7411	3809	9720	7096	3952
	22.0	30	14778	9624	2976	12170	7942	2233	11248	7336	2651	12420	8121	3453	11988	7805	3596	10800	7569	3952	10044	7411	4165
	24.0	32	15792	9624	3020	13000	7942	2261	11985	7336	2680	13284	8121	3453	12744	7805	3631	11232	7726	4058	10260	7647	4308

	INDOOR		OUTDOOR TEMPERATURE (°CDB)																				
	EWB	EDB	-10			21			27			32			35			40			43		
	°C	°C	TC	SHC	PI	TC	SHC	PI	TC	SHC	PI	TC	SHC	PI	TC	SHC	PI	TC	SHC	PI	TC	SHC	PI
(1.8+1.8+1.8) + (1.8+1.8+2.5)	12.0	18	12804	8784	3034	9228	7453	2293	8541	6880	2702	9430	7639	3496	9085	7304	3648	8510	6884	3914	8165	6548	4066
	14.0	20	12804	8784	3034	9915	7453	2293	9228	6951	2734	10120	7639	3534	9775	7388	3686	9085	6884	3952	8740	6632	4142
	16.0	22	12804	9347	3081	10602	7453	2323	9817	6951	2766	10810	7639	3572	10465	7388	3762	9775	6884	4028	9430	6632	4180
	18.0	25	13730	10023	3129	11290	8098	2353	10406	7525	2798	11500	8311	3610	11040	7975	3762	10350	7472	4066	9890	7136	4218
	19.0	27	14193	10361	3176	11682	8528	2383	10799	7883	2829	11960	8731	3648	11500	8395	3800	10810	7891	4066	10350	7556	4218
	22.0	30	15735	10248	3176	12959	8456	2383	11977	7811	2829	13225	8647	3686	12765	8311	3838	11500	8059	4218	10695	7891	4446
	24.0	32	16815	10248	3224	13842	8456	2413	12762	7811	2861	14145	8647	3686	13570	8311	3876	11960	8227	4332	10925	8143	4598
(1.8+1.8+1.8) + (1.8+1.8+3.5)	12.0	18	13027	8937	3094	9389	7583	2338	8689	6999	2756	9594	7772	3565	9243	7431	3720	8658	7004	3991	8307	6662	4146
	14.0	20	13027	8937	3094	10088	7583	2338	9389	7072	2788	10296	7772	3604	9945	7516	3759	9243	7004	4030	8892	6747	4224
	16.0	22	13027	9510	3142	10787	7583	2369	9988	7072	2820	10998	7772	3643	10647	7516	3836	9945	7004	4108	9594	6747	4263
	18.0	25	13969	10197	3191	11486	8239	2400	10587	7656	2853	11700	8456	3681	11232	8114	3836	10530	7601	4146	10062	7260	4301
	19.0	27	14440	10541	3239	11885	8676	2430	10987	8020	2885	12168	8883	3720	11700	8541	3875	10998	8029	4146	10530	7687	4301
	22.0	30	16009	10426	3239	13184	8603	2430	12185	7947	2885	13455	8797	3759	12987	8456	3914	11700	8199	4301	10881	8029	4534
	24.0	32	17108	10426	3287	14083	8603	2461	12984	7947	2918	14391	8797	3759	13806	8456	3953	12168	8370	4418	11115	8285	4689
(1.8+1.8+1.8) + (1.8+1.8+5)	12.0	18	13027	8937	3094	9389	7583	2338	8689	6999	2756	9594	7772	3565	9243	7431	3720	8658	7004	3991	8307	6662	4146
	14.0	20	13027	8937	3094	10088	7583	2338	9389	7072	2788	10296	7772	3604	9945	7516	3759	9243	7004	4030	8892	6747	4224
	16.0	22	13027	9510	3142	10787	7583	2369	9988	7072	2820	10998	7772	3643	10647	7516	3836	9945	7004	4108	9594	6747	4263
	18.0	25	13969	10197	3191	11486	8239	2400	10587	7656	2853	11700	8456	3681	11232	8114	3836	10530	7601	4146	10062	7260	4301
	19.0	27	14440	10541	3239	11885	8676	2430	10987	8020	2885	12168	8883	3720	11700	8541	3875	10998	8029	4146	10530	7687	4301
	22.0	30	16009	10426	3239	13184	8603	2430	12185	7947	2885	13455	8797	3759	12987	8456	3914	11700	8199	4301	10881	8029	4534
	24.0	32	17108	10426	3287	14083	8603	2461	12984	7947	2918	14391	8797	3759	13806	8456	3953	12168	8370	4418	11115	8285	4689
(1.8+1.8+2.5) + (1.8+1.8+2.5)	12.0	18	13584	9319	3226	9790	7907	2438	9061	7299	2873	10004	8104	3717	9638	7748	3878	9028	7303	4161	8662	6947	4323
	14.0	20	13584	9319	3226	10519	7907	2438	9790	7375	2907	10736	8104	3757	10370	7837	3919	9638	7303	4202	9272	7036	4404
	16.0	22	13584	9916	3276	11248	7907	2470	10415	7375	2940	11468	8104	3798	11102	7837	4000	10370	7303	4282	10004	7036	4444
	18.0	25	14566	10633	3326	11977	8591	2502	11040	7983	2974	12200	8817	3838	11712	8461	4000	10980	7926	4323	10492	7570	4484
	19.0	27	15057	10991	3377	12393	9047	2534	11456	8363	3008	12688	9262	3878	12200	8906	4040	11468	8372	4323	10980	8015	4484
	22.0	30	16693	10872	3377	13747	8971	2534	12706	8287	3008	14030	9173	3919	13542	8817	4080	12200	8550	4484	11346	8372	4727
	24.0	32	17839	10872	3427	14685	8971	2566	13539	8287	3042	15006	9173	3919	14396	8817	4121	12688	8728	4606	11590	8639	4888
(1.8+1.8+2.5) + (1.8+1.8+3.5)	12.0	18	13806	9471	3286	9950	8036	2483	9209	7418	2926	10168	8237	3786	9796	7875	3950	9176	7423	4238	8804	7061	4403
	14.0	20	13806	9471	3286	10691	8036	2483	9950	7495	2961	10912	8237	3827	10540	7966	3992	9796	7423	4280	9424	7151	4485
	16.0	22	13806	10079	3337	11432	8036	2516	10585	7495	2995	11656	8237	3868	11284	7966	4074	10540	7423	4362	10168	7151	4527
	18.0	25	14804	10807	3388	12173	8732	2548	11220	8114	3029	12400	8961	3909	11904	8599	4074	11160	8056	4403	10664	7694	4568
	19.0	27	15303	11171	3440	12597	9196	2581	11644	8500	3064	12896	9414	3950	12400	9052	4115	11656	8509	4403	11160	8147	4568
	22.0	30	16967	11050	3440	13973	9118	2581	12914	8423	3064	14260	9324	3992	13764	8961	4156	12400	8690	4568	11532	8509	4815
	24.0	32	18131	11050	3491	14925	9118	2614	13761	8423	3098	15252	9324	3992	14632	8961	4197	12896	8871	4691	11780	8780	4979
(1.8+1.8+2.5) + (1.8+1.8+5)	12.0	18	13806	9471	3286	9950	8036	2483	9209	7418	2926	10168	8237	3786	9796	7875	3950	9176	7423	4238	8804	7061	4403
	14.0	20	13806	9471	3286	10691	8036	2483	9950	7495	2961	10912	8237	3827	10540	7966	3992	9796	7423	4280	9424	7151	4485
	16.0	22	13806	10079	3337	11432	8036	2516	10585	7495	2995	11656	8237	3868	11284	7966	4074	10540	7423	4362	10168	7151	4527
	18.0	25	14804	10807	3388	12173	8732	2548	11220	8114	3029	12400	8961	3909	11904	8599	4074	11160	8056	4403	10664	7694	4568
	19.0	27	15303	11171	3440	12597	9196	2581	11644	8500	3064	12896	9414	3950	12400	9052	4115	11656	8509	4403	11160	8147	4568
	22.0	30	16967	11050	3440	13973	9118	2581	12914	8423	3064	14260	9324	3992	13764	8961	4156	12400	8690	4568	11532	8509	4815
	24.0	32	18131	11050	3491	14925	9118	2614	13761	8423	3098	15252	9324	3992	14632	8961	4197	12896	8871	4691	11780	8780	4979
(1.8+1.8+3.5) + (1.8+1.8+3.5)	12.0	18	14029	9624	3345	10111	8166	2528	9358	7538	2979	10332	8370	3855	9954	8002	4022	9324	7542	4316	8946	7174	4483
	14.0	20	14029	9624	3345	10864	8166	2528	10111	7616	3015	11088	8370	3897	10710	8094	4064	9954	7542	4358	9576	7266	4567
	16.0	22	14029	10241	3398	11617	8166	2561	10756	7616	3050	11844	8370	3939	11466	8094	4148	10710	7542	4441	10332	7266	4609
	18.0	25	15043	10982	3450	12370	8873	2595	11401	8245	3085	12600	9106	3981	12096	8738	4148	11340	8186	4483	10836	7818	4651
	19.0	27	15550	11352	3502	12800	9344	2628	11832	8637	3120	13104	9566	4022	12600	9198	4190	11844	8646	4483	11340	8278	4651
	22.0	30	17240	11228	3502	14198	9265	2628	13122	8559	3120	14490	9474	4064	13986	9106	4232	12600	8830	4651	11718	8646	4902
	24.0	32	18424	11228	3555	15166	9265	2661	13983	8559	3155	15498	9474	4064	14868	9106	4274	13104	9014	4777	11970	8922	5070

	INDOOR		OUTDOOR TEMPERATURE (°CDB)																				
	EWB	EDB	-10			21			27			32			35			40			43		
	°C	°C	TC	SHC	PI	TC	SHC	PI	TC	SHC	PI	TC	SHC	PI	TC	SHC	PI	TC	SHC	PI	TC	SHC	PI
(1.8+1.8+3.5) + (1.8+1.8+5)	12.0	18	14029	9624	3345	10111	8166	2528	9358	7538	2979	10332	8370	3855	9954	8002	4022	9324	7542	4316	8946	7174	4483
	14.0	20	14029	9624	3345	10864	8166	2528	10111	7616	3015	11088	8370	3897	10710	8094	4064	9954	7542	4358	9576	7266	4567
	16.0	22	14029	10241	3398	11617	8166	2561	10756	7616	3050	11844	8370	3939	11466	8094	4148	10710	7542	4441	10332	7266	4609
	18.0	25	15043	10982	3450	12370	8873	2595	11401	8245	3085	12600	9106	3981	12096	8738	4148	11340	8186	4483	10836	7818	4651
	19.0	27	15550	11352	3502	12800	9344	2628	11832	8637	3120	13104	9566	4022	12600	9198	4190	11844	8646	4483	11340	8278	4651
	22.0	30	17240	11228	3502	14198	9265	2628	13122	8559	3120	14490	9474	4064	13986	9106	4232	12600	8830	4651	11718	8646	4902
	24.0	32	18424	11228	3555	15166	9265	2661	13983	8559	3155	15498	9474	4064	14868	9106	4274	13104	9014	4777	11970	8922	5070
(1.8+1.8+5) + (1.8+1.8+5)	12.0	18	14029	9624	3345	10111	8166	2528	9358	7538	2979	10332	8370	3855	9954	8002	4022	9324	7542	4316	8946	7174	4483
	14.0	20	14029	9624	3345	10864	8166	2528	10111	7616	3015	11088	8370	3897	10710	8094	4064	9954	7542	4358	9576	7266	4567
	16.0	22	14029	10241	3398	11617	8166	2561	10756	7616	3050	11844	8370	3939	11466	8094	4148	10710	7542	4441	10332	7266	4609
	18.0	25	15043	10982	3450	12370	8873	2595	11401	8245	3085	12600	9106	3981	12096	8738	4148	11340	8186	4483	10836	7818	4651
	19.0	27	15550	11352	3502	12800	9344	2628	11832	8637	3120	13104	9566	4022	12600	9198	4190	11844	8646	4483	11340	8278	4651
	22.0	30	17240	11228	3502	14198	9265	2628	13122	8559	3120	14490	9474	4064	13986	9106	4232	12600	8830	4651	11718	8646	4902
	24.0	32	18424	11228	3555	15166	9265	2661	13983	8559	3155	15498	9474	4064	14868	9106	4274	13104	9014	4777	11970	8922	5070
(1.8+1.8+2.5) + (1.8+2.5+2.5)	12.0	18	13806	9471	3286	9950	8036	2483	9209	7418	2926	10168	8237	3786	9796	7875	3950	9176	7423	4238	8804	7061	4403
	14.0	20	13806	9471	3286	10691	8036	2483	9950	7495	2961	10912	8237	3827	10540	7966	3992	9796	7423	4280	9424	7151	4485
	16.0	22	13806	10079	3337	11432	8036	2516	10585	7495	2995	11656	8237	3868	11284	7966	4074	10540	7423	4362	10168	7151	4527
	18.0	25	14804	10807	3388	12173	8732	2548	11220	8114	3029	12400	8961	3909	11904	8599	4074	11160	8056	4403	10664	7694	4568
	19.0	27	15303	11171	3440	12597	9196	2581	11644	8500	3064	12896	9414	3950	12400	9052	4115	11656	8509	4403	11160	8147	4568
	22.0	30	16967	11050	3440	13973	9118	2581	12914	8423	3064	14260	9324	3992	13764	8961	4156	12400	8690	4568	11532	8509	4815
	24.0	32	18131	11050	3491	14925	9118	2614	13761	8423	3098	15252	9324	3992	14632	8961	4197	12896	8871	4691	11780	8780	4979
(1.8+1.8+2.5) + (1.8+2.5+3.5)	12.0	18	13806	9471	3286	9950	8036	2483	9209	7418	2926	10168	8237	3786	9796	7875	3950	9176	7423	4238	8804	7061	4403
	14.0	20	13806	9471	3286	10691	8036	2483	9950	7495	2961	10912	8237	3827	10540	7966	3992	9796	7423	4280	9424	7151	4485
	16.0	22	13806	10079	3337	11432	8036	2516	10585	7495	2995	11656	8237	3868	11284	7966	4074	10540	7423	4362	10168	7151	4527
	18.0	25	14804	10807	3388	12173	8732	2548	11220	8114	3029	12400	8961	3909	11904	8599	4074	11160	8056	4403	10664	7694	4568
	19.0	27	15303	11171	3440	12597	9196	2581	11644	8500	3064	12896	9414	3950	12400	9052	4115	11656	8509	4403	11160	8147	4568
	22.0	30	16967	11050	3440	13973	9118	2581	12914	8423	3064	14260	9324	3992	13764	8961	4156	12400	8690	4568	11532	8509	4815
	24.0	32	18131	11050	3491	14925	9118	2614	13761	8423	3098	15252	9324	3992	14632	8961	4197	12896	8871	4691	11780	8780	4979
(1.8+1.8+5) + (1.8+2.5+2.5)	12.0	18	14029	9624	3345	10111	8166	2528	9358	7538	2979	10332	8370	3855	9954	8002	4022	9324	7542	4316	8946	7174	4483
	14.0	20	14029	9624	3345	10864	8166	2528	10111	7616	3015	11088	8370	3897	10710	8094	4064	9954	7542	4358	9576	7266	4567
	16.0	22	14029	10241	3398	11617	8166	2561	10756	7616	3050	11844	8370	3939	11466	8094	4148	10710	7542	4441	10332	7266	4609
	18.0	25	15043	10982	3450	12370	8873	2595	11401	8245	3085	12600	9106	3981	12096	8738	4148	11340	8186	4483	10836	7818	4651
	19.0	27	15550	11352	3502	12800	9344	2628	11832	8637	3120	13104	9566	4022	12600	9198	4190	11844	8646	4483	11340	8278	4651
	22.0	30	17240	11228	3502	14198	9265	2628	13122	8559	3120	14490	9474	4064	13986	9106	4232	12600	8830	4651	11718	8646	4902
	24.0	32	18424	11228	3555	15166	9265	2661	13983	8559	3155	15498	9474	4064	14868	9106	4274	13104	9014	4777	11970	8922	5070
(1.8+1.8+3.5) + (1.8+2.5+3.5)	12.0	18	14029	9624	3345	10111	8166	2528	9358	7538	2979	10332	8370	3855	9954	8002	4022	9324	7542	4316	8946	7174	4483
	14.0	20	14029	9624	3345	10864	8166	2528	10111	7616	3015	11088	8370	3897	10710	8094	4064	9954	7542	4358	9576	7266	4567
	16.0	22	14029	10241	3398	11617	8166	2561	10756	7616	3050	11844	8370	3939	11466	8094	4148	10710	7542	4441	10332	7266	4609
	18.0	25	15043	10982	3450	12370	8873	2595	11401	8245	3085	12600	9106	3981	12096	8738	4148	11340	8186	4483	10836	7818	4651
	19.0	27	15550	11352	3502	12800	9344	2628	11832	8637	3120	13104	9566	4022	12600	9198	4190	11844	8646	4483	11340	8278	4651
	22.0	30	17240	11228	3502	14198	9265	2628	13122	8559	3120	14490	9474	4064	13986	9106	4232	12600	8830	4651	11718	8646	4902
	24.0	32	18424	11228	3555	15166	9265	2661	13983	8559	3155	15498	9474	4064	14868	9106	4274	13104	9014	4777	11970	8922	5070
(1.8+1.8+5) + (1.8+2.5+3.5)	12.0	18	14029	9624	3345	10111	8166	2528	9358	7538	2979	10332	8370	3855	9954	8002	4022	9324	7542	4316	8946	7174	4483
	14.0	20	14029	9624	3345	10864	8166	2528	10111	7616	3015	11088	8370	3897	10710	8094	4064	9954	7542	4358	9576	7266	4567
	16.0	22	14029	10241	3398	11617	8166	2561	10756	7616	3050	11844	8370	3939	11466	8094	4148	10710	7542	4441	10332	7266	4609
	18.0	25	15043	10982	3450	12370	8873	2595	11401	8245	3085	12600	9106	3981	12096	8738	4148	11340	8186	4483	10836	7818	4651
	19.0	27	15550	11352	3502	12800	9344	2628	11832	8637	3120	13104	9566	4022	12600	9198	4190	11844	8646	4483	11340	8278	4651
	22.0	30	17240	11228	3502	14198	9265	2628	13122	8559	3120	14490	9474	4064	13986	9106	4232	12600	8830	4651	11718	8646	4902
	24.0	32	18424	11228	3555	15166	9265	2661	13983	8559	3155	15498	9474	4064	14868	9106	4274	13104	9014	4777	11970	8922	5070

	INDOOR		OUTDOOR TEMPERATURE (°CDB)																				
	EWB	EDB	-10			21			27			32			35			40			43		
	°C	°C	TC	SHC	PI	TC	SHC	PI	TC	SHC	PI	TC	SHC	PI	TC	SHC	PI	TC	SHC	PI	TC	SHC	PI
(1.8+1.8+3.5) + (1.8+3.5+3.5)	12.0	18	14029	9624	3345	10111	8166	2528	9358	7538	2979	10332	8370	3855	9954	8002	4022	9324	7542	4316	8946	7174	4483
	14.0	20	14029	9624	3345	10864	8166	2528	10111	7616	3015	11088	8370	3897	10710	8094	4064	9954	7542	4358	9576	7266	4567
	16.0	22	14029	10241	3398	11617	8166	2561	10756	7616	3050	11844	8370	3939	11466	8094	4148	10710	7542	4441	10332	7266	4609
	18.0	25	15043	10982	3450	12370	8873	2595	11401	8245	3085	12600	9106	3981	12096	8738	4148	11340	8186	4483	10836	7818	4651
	19.0	27	15550	11352	3502	12800	9344	2628	11832	8637	3120	13104	9566	4022	12600	9198	4190	11844	8646	4483	11340	8278	4651
	22.0	30	17240	11228	3502	14198	9265	2628	13122	8559	3120	14490	9474	4064	13986	9106	4232	12600	8830	4651	11718	8646	4902
	24.0	32	18424	11228	3555	15166	9265	2661	13983	8559	3155	15498	9474	4064	14868	9106	4274	13104	9014	4777	11970	8922	5070
(1.8+1.8+5) + (1.8+3.5+3.5)	12.0	18	14029	9624	3345	10111	8166	2528	9358	7538	2979	10332	8370	3855	9954	8002	4022	9324	7542	4316	8946	7174	4483
	14.0	20	14029	9624	3345	10864	8166	2528	10111	7616	3015	11088	8370	3897	10710	8094	4064	9954	7542	4358	9576	7266	4567
	16.0	22	14029	10241	3398	11617	8166	2561	10756	7616	3050	11844	8370	3939	11466	8094	4148	10710	7542	4441	10332	7266	4609
	18.0	25	15043	10982	3450	12370	8873	2595	11401	8245	3085	12600	9106	3981	12096	8738	4148	11340	8186	4483	10836	7818	4651
	19.0	27	15550	11352	3502	12800	9344	2628	11832	8637	3120	13104	9566	4022	12600	9198	4190	11844	8646	4483	11340	8278	4651
	22.0	30	17240	11228	3502	14198	9265	2628	13122	8559	3120	14490	9474	4064	13986	9106	4232	12600	8830	4651	11718	8646	4902
	24.0	32	18424	11228	3555	15166	9265	2661	13983	8559	3155	15498	9474	4064	14868	9106	4274	13104	9014	4777	11970	8922	5070
(1.8+2.5+2.5) + (1.8+2.5+2.5)	12.0	18	14029	9624	3345	10111	8166	2528	9358	7538	2979	10332	8370	3855	9954	8002	4022	9324	7542	4316	8946	7174	4483
	14.0	20	14029	9624	3345	10864	8166	2528	10111	7616	3015	11088	8370	3897	10710	8094	4064	9954	7542	4358	9576	7266	4567
	16.0	22	14029	10241	3398	11617	8166	2561	10756	7616	3050	11844	8370	3939	11466	8094	4148	10710	7542	4441	10332	7266	4609
	18.0	25	15043	10982	3450	12370	8873	2595	11401	8245	3085	12600	9106	3981	12096	8738	4148	11340	8186	4483	10836	7818	4651
	19.0	27	15550	11352	3502	12800	9344	2628	11832	8637	3120	13104	9566	4022	12600	9198	4190	11844	8646	4483	11340	8278	4651
	22.0	30	17240	11228	3502	14198	9265	2628	13122	8559	3120	14490	9474	4064	13986	9106	4232	12600	8830	4651	11718	8646	4902
	24.0	32	18424	11228	3555	15166	9265	2661	13983	8559	3155	15498	9474	4064	14868	9106	4274	13104	9014	4777	11970	8922	5070
(1.8+2.5+2.5) + (1.8+2.5+3.5)	12.0	18	14029	9624	3345	10111	8166	2528	9358	7538	2979	10332	8370	3855	9954	8002	4022	9324	7542	4316	8946	7174	4483
	14.0	20	14029	9624	3345	10864	8166	2528	10111	7616	3015	11088	8370	3897	10710	8094	4064	9954	7542	4358	9576	7266	4567
	16.0	22	14029	10241	3398	11617	8166	2561	10756	7616	3050	11844	8370	3939	11466	8094	4148	10710	7542	4441	10332	7266	4609
	18.0	25	15043	10982	3450	12370	8873	2595	11401	8245	3085	12600	9106	3981	12096	8738	4148	11340	8186	4483	10836	7818	4651
	19.0	27	15550	11352	3502	12800	9344	2628	11832	8637	3120	13104	9566	4022	12600	9198	4190	11844	8646	4483	11340	8278	4651
	22.0	30	17240	11228	3502	14198	9265	2628	13122	8559	3120	14490	9474	4064	13986	9106	4232	12600	8830	4651	11718	8646	4902
	24.0	32	18424	11228	3555	15166	9265	2661	13983	8559	3155	15498	9474	4064	14868	9106	4274	13104	9014	4777	11970	8922	5070
(1.8+1.8+5) + (2.5+2.5+2.5)	12.0	18	14029	9624	3345	10111	8166	2528	9358	7538	2979	10332	8370	3855	9954	8002	4022	9324	7542	4316	8946	7174	4483
	14.0	20	14029	9624	3345	10864	8166	2528	10111	7616	3015	11088	8370	3897	10710	8094	4064	9954	7542	4358	9576	7266	4567
	16.0	22	14029	10241	3398	11617	8166	2561	10756	7616	3050	11844	8370	3939	11466	8094	4148	10710	7542	4441	10332	7266	4609
	18.0	25	15043	10982	3450	12370	8873	2595	11401	8245	3085	12600	9106	3981	12096	8738	4148	11340	8186	4483	10836	7818	4651
	19.0	27	15550	11352	3502	12800	9344	2628	11832	8637	3120	13104	9566	4022	12600	9198	4190	11844	8646	4483	11340	8278	4651
	22.0	30	17240	11228	3502	14198	9265	2628	13122	8559	3120	14490	9474	4064	13986	9106	4232	12600	8830	4651	11718	8646	4902
	24.0	32	18424	11228	3555	15166	9265	2661	13983	8559	3155	15498	9474	4064	14868	9106	4274	13104	9014	4777	11970	8922	5070
(1.8+2.5+3.5) + (1.8+2.5+3.5)	12.0	18	14029	9624	3345	10111	8166	2528	9358	7538	2979	10332	8370	3855	9954	8002	4022	9324	7542	4316	8946	7174	4483
	14.0	20	14029	9624	3345	10864	8166	2528	10111	7616	3015	11088	8370	3897	10710	8094	4064	9954	7542	4358	9576	7266	4567
	16.0	22	14029	10241	3398	11617	8166	2561	10756	7616	3050	11844	8370	3939	11466	8094	4148	10710	7542	4441	10332	7266	4609
	18.0	25	15043	10982	3450	12370	8873	2595	11401	8245	3085	12600	9106	3981	12096	8738	4148	11340	8186	4483	10836	7818	4651
	19.0	27	15550	11352	3502	12800	9344	2628	11832	8637	3120	13104	9566	4022	12600	9198	4190	11844	8646	4483	11340	8278	4651
	22.0	30	17240	11228	3502	14198	9265	2628	13122	8559	3120	14490	9474	4064	13986	9106	4232	12600	8830	4651	11718	8646	4902
	24.0	32	18424	11228	3555	15166	9265	2661	13983	8559	3155	15498	9474	4064	14868	9106	4274	13104	9014	4777	11970	8922	5070
(1.8+1.8+5) + (2.5+2.5+3.5)	12.0	18	14029	9624	3345	10111	8166	2528	9358	7538	2979	10332	8370	3855	9954	8002	4022	9324	7542	4316	8946	7174	4483
	14.0	20	14029	9624	3345	10864	8166	2528	10111	7616	3015	11088	8370	3897	10710	8094	4064	9954	7542	4358	9576	7266	4567
	16.0	22	14029	10241	3398	11617	8166	2561	10756	7616	3050	11844	8370	3939	11466	8094	4148	10710	7542	4441	10332	7266	4609
	18.0	25	15043	10982	3450	12370	8873	2595	11401	8245	3085	12600	9106	3981	12096	8738	4148	11340	8186	4483	10836	7818	4651
	19.0	27	15550	11352	3502	12800	9344	2628	11832	8637	3120	13104	9566	4022	12600	9198	4190	11844	8646	4483	11340	8278	4651
	22.0	30	17240	11228	3502	14198	9265	2628	13122	8559	3120	14490	9474	4064	13986	9106	4232	12600	8830	4651	11718	8646	4902
	24.0	32	18424	11228	3555	15166	9265	2661	13983	8559	3155	15498	9474	4064	14868	9106	4274	13104	9014	4777	11970	8922	5070

	INDOOR		OUTDOOR TEMPERATURE (°CDB)																				
	EWB	EDB	-10			21			27			32			35			40			43		
	°C	°C	TC	SHC	PI	TC	SHC	PI	TC	SHC	PI	TC	SHC	PI	TC	SHC	PI	TC	SHC	PI	TC	SHC	PI
(1.8+2.5+3.5) + (1.8+3.5+3.5)	12.0	18	14029	9624	3345	10111	8166	2528	9358	7538	2979	10332	8370	3855	9954	8002	4022	9324	7542	4316	8946	7174	4483
	14.0	20	14029	9624	3345	10864	8166	2528	10111	7616	3015	11088	8370	3897	10710	8094	4064	9954	7542	4358	9576	7266	4567
	16.0	22	14029	10241	3398	11617	8166	2561	10756	7616	3050	11844	8370	3939	11466	8094	4148	10710	7542	4441	10332	7266	4609
	18.0	25	15043	10982	3450	12370	8873	2595	11401	8245	3085	12600	9106	3981	12096	8738	4148	11340	8186	4483	10836	7818	4651
	19.0	27	15550	11352	3502	12800	9344	2628	11832	8637	3120	13104	9566	4022	12600	9198	4190	11844	8646	4483	11340	8278	4651
	22.0	30	17240	11228	3502	14198	9265	2628	13122	8559	3120	14490	9474	4064	13986	9106	4232	12600	8830	4651	11718	8646	4902
	24.0	32	18424	11228	3555	15166	9265	2661	13983	8559	3155	15498	9474	4064	14868	9106	4274	13104	9014	4777	11970	8922	5070
(1.8+3.5+3.5) + (1.8+3.5+3.5)	12.0	18	14029	9624	3345	10111	8166	2528	9358	7538	2979	10332	8370	3855	9954	8002	4022	9324	7542	4316	8946	7174	4483
	14.0	20	14029	9624	3345	10864	8166	2528	10111	7616	3015	11088	8370	3897	10710	8094	4064	9954	7542	4358	9576	7266	4567
	16.0	22	14029	10241	3398	11617	8166	2561	10756	7616	3050	11844	8370	3939	11466	8094	4148	10710	7542	4441	10332	7266	4609
	18.0	25	15043	10982	3450	12370	8873	2595	11401	8245	3085	12600	9106	3981	12096	8738	4148	11340	8186	4483	10836	7818	4651
	19.0	27	15550	11352	3502	12800	9344	2628	11832	8637	3120	13104	9566	4022	12600	9198	4190	11844	8646	4483	11340	8278	4651
	22.0	30	17240	11228	3502	14198	9265	2628	13122	8559	3120	14490	9474	4064	13986	9106	4232	12600	8830	4651	11718	8646	4902
	24.0	32	18424	11228	3555	15166	9265	2661	13983	8559	3155	15498	9474	4064	14868	9106	4274	13104	9014	4777	11970	8922	5070
(1.8+2.5+2.5) + (2.5+2.5+2.5)	12.0	18	14029	9624	3345	10111	8166	2528	9358	7538	2979	10332	8370	3855	9954	8002	4022	9324	7542	4316	8946	7174	4483
	14.0	20	14029	9624	3345	10864	8166	2528	10111	7616	3015	11088	8370	3897	10710	8094	4064	9954	7542	4358	9576	7266	4567
	16.0	22	14029	10241	3398	11617	8166	2561	10756	7616	3050	11844	8370	3939	11466	8094	4148	10710	7542	4441	10332	7266	4609
	18.0	25	15043	10982	3450	12370	8873	2595	11401	8245	3085	12600	9106	3981	12096	8738	4148	11340	8186	4483	10836	7818	4651
	19.0	27	15550	11352	3502	12800	9344	2628	11832	8637	3120	13104	9566	4022	12600	9198	4190	11844	8646	4483	11340	8278	4651
	22.0	30	17240	11228	3502	14198	9265	2628	13122	8559	3120	14490	9474	4064	13986	9106	4232	12600	8830	4651	11718	8646	4902
	24.0	32	18424	11228	3555	15166	9265	2661	13983	8559	3155	15498	9474	4064	14868	9106	4274	13104	9014	4777	11970	8922	5070
(1.8+2.5+3.5) + (2.5+2.5+2.5)	12.0	18	14029	9624	3345	10111	8166	2528	9358	7538	2979	10332	8370	3855	9954	8002	4022	9324	7542	4316	8946	7174	4483
	14.0	20	14029	9624	3345	10864	8166	2528	10111	7616	3015	11088	8370	3897	10710	8094	4064	9954	7542	4358	9576	7266	4567
	16.0	22	14029	10241	3398	11617	8166	2561	10756	7616	3050	11844	8370	3939	11466	8094	4148	10710	7542	4441	10332	7266	4609
	18.0	25	15043	10982	3450	12370	8873	2595	11401	8245	3085	12600	9106	3981	12096	8738	4148	11340	8186	4483	10836	7818	4651
	19.0	27	15550	11352	3502	12800	9344	2628	11832	8637	3120	13104	9566	4022	12600	9198	4190	11844	8646	4483	11340	8278	4651
	22.0	30	17240	11228	3502	14198	9265	2628	13122	8559	3120	14490	9474	4064	13986	9106	4232	12600	8830	4651	11718	8646	4902
	24.0	32	18424	11228	3555	15166	9265	2661	13983	8559	3155	15498	9474	4064	14868	9106	4274	13104	9014	4777	11970	8922	5070
(1.8+2.5+3.5) + (2.5+2.5+3.5)	12.0	18	14029	9624	3345	10111	8166	2528	9358	7538	2979	10332	8370	3855	9954	8002	4022	9324	7542	4316	8946	7174	4483
	14.0	20	14029	9624	3345	10864	8166	2528	10111	7616	3015	11088	8370	3897	10710	8094	4064	9954	7542	4358	9576	7266	4567
	16.0	22	14029	10241	3398	11617	8166	2561	10756	7616	3050	11844	8370	3939	11466	8094	4148	10710	7542	4441	10332	7266	4609
	18.0	25	15043	10982	3450	12370	8873	2595	11401	8245	3085	12600	9106	3981	12096	8738	4148	11340	8186	4483	10836	7818	4651
	19.0	27	15550	11352	3502	12800	9344	2628	11832	8637	3120	13104	9566	4022	12600	9198	4190	11844	8646	4483	11340	8278	4651
	22.0	30	17240	11228	3502	14198	9265	2628	13122	8559	3120	14490	9474	4064	13986	9106	4232	12600	8830	4651	11718	8646	4902
	24.0	32	18424	11228	3555	15166	9265	2661	13983	8559	3155	15498	9474	4064	14868	9106	4274	13104	9014	4777	11970	8922	5070
(2.5+2.5+2.5) + (2.5+2.5+2.5)	12.0	18	14029	9624	3345	10111	8166	2528	9358	7538	2979	10332	8370	3855	9954	8002	4022	9324	7542	4316	8946	7174	4483
	14.0	20	14029	9624	3345	10864	8166	2528	10111	7616	3015	11088	8370	3897	10710	8094	4064	9954	7542	4358	9576	7266	4567
	16.0	22	14029	10241	3398	11617	8166	2561	10756	7616	3050	11844	8370	3939	11466	8094	4148	10710	7542	4441	10332	7266	4609
	18.0	25	15043	10982	3450	12370	8873	2595	11401	8245	3085	12600	9106	3981	12096	8738	4148	11340	8186	4483	10836	7818	4651
	19.0	27	15550	11352	3502	12800	9344	2628	11832	8637	3120	13104	9566	4022	12600	9198	4190	11844	8646	4483	11340	8278	4651
	22.0	30	17240	11228	3502	14198	9265	2628	13122	8559	3120	14490	9474	4064	13986	9106	4232	12600	8830	4651	11718	8646	4902
	24.0	32	18424	11228	3555	15166	9265	2661	13983	8559	3155	15498	9474	4064	14868	9106	4274	13104	9014	4777	11970	8922	5070

	INDOOR		OUTDOOR TEMPERATURE (°CDB)																				
	EWB	EDB	-10			21			27			32			35			40			43		
	°C	°C	-10	21	27	32	35	40	43	-10	21	27	32	35	40	43	-10	21	27	32	35	40	43
(2.5+2.5+2.5) + (2.5+2.5+3.5)	12.0	18	14029	9624	3345	10111	8166	2528	9358	7538	2979	10332	8370	3855	9954	8002	4022	9324	7542	4316	8946	7174	4483
	14.0	20	14029	9624	3345	10864	8166	2528	10111	7616	3015	11088	8370	3897	10710	8094	4064	9954	7542	4358	9576	7266	4567
	16.0	22	14029	10241	3398	11617	8166	2561	10756	7616	3050	11844	8370	3939	11466	8094	4148	10710	7542	4441	10332	7266	4609
	18.0	25	15043	10982	3450	12370	8873	2595	11401	8245	3085	12600	9106	3981	12096	8738	4148	11340	8186	4483	10836	7818	4651
	19.0	27	15550	11352	3502	12800	9344	2628	11832	8637	3120	13104	9566	4022	12600	9198	4190	11844	8646	4483	11340	8278	4651
	22.0	30	17240	11228	3502	14198	9265	2628	13122	8559	3120	14490	9474	4064	13986	9106	4232	12600	8830	4651	11718	8646	4902
	24.0	32	18424	11228	3555	15166	9265	2661	13983	8559	3155	15498	9474	4064	14868	9106	4274	13104	9014	4777	11970	8922	5070
(2.5+2.5+3.5) + (2.5+2.5+3.5)	12.0	18	14029	9624	3345	10111	8166	2528	9358	7538	2979	10332	8370	3855	9954	8002	4022	9324	7542	4316	8946	7174	4483
	14.0	20	14029	9624	3345	10864	8166	2528	10111	7616	3015	11088	8370	3897	10710	8094	4064	9954	7542	4358	9576	7266	4567
	16.0	22	14029	10241	3398	11617	8166	2561	10756	7616	3050	11844	8370	3939	11466	8094	4148	10710	7542	4441	10332	7266	4609
	18.0	25	15043	10982	3450	12370	8873	2595	11401	8245	3085	12600	9106	3981	12096	8738	4148	11340	8186	4483	10836	7818	4651
	19.0	27	15550	11352	3502	12800	9344	2628	11832	8637	3120	13104	9566	4022	12600	9198	4190	11844	8646	4483	11340	8278	4651
	22.0	30	17240	11228	3502	14198	9265	2628	13122	8559	3120	14490	9474	4064	13986	9106	4232	12600	8830	4651	11718	8646	4902
	24.0	32	18424	11228	3555	15166	9265	2661	13983	8559	3155	15498	9474	4064	14868	9106	4274	13104	9014	4777	11970	8922	5070

HEATING [50Hz, 230V]

	INDOOR	OUTDOOR TEMPERATURE (°CDW)																							
	EDB	-15			-10			-7			-5			0			7			10			15		
	°C	TC	SHC	PI	TC	SHC	PI	TC	SHC	PI	TC	SHC	PI	TC	SHC	PI	TC	SHC	PI	TC	SHC	PI	TC	SHC	PI
RAM-130NP6A	16	5184	0	3108	8208	0	3192	9357	0	3328	10123	0	3419	12326	0	3826	14558	0	3877	15883	0	3982	18331	0	4179
	18	5112	0	3150	8136	0	3234	9268	0	3398	10022	0	3507	12197	0	3923	14486	0	4074	15826	0	4158	18259	0	4376
	20	5040	0	3192	8064	0	3276	9187	0	3452	9936	0	3570	12096	0	3990	14400	0	4200	15480	0	4347	18144	0	4578
	22	4968	0	3234	7992	0	3318	9072	0	3525	9792	0	3662	11966	0	4087	14314	0	4368	15653	0	4507	18058	0	4767
	24	4896	0	3276	7920	0	3360	8991	0	3594	9706	0	3751	11866	0	4183	14227	0	4536	15566	0	4679	17798	0	4960
1.2	16	648	0	366	1026	0	376	1170	0	392	1265	0	403	1541	0	451	1820	0	457	1985	0	469	2291	0	493
	18	639	0	371	1017	0	381	1158	0	400	1253	0	413	1525	0	462	1811	0	480	1978	0	490	2282	0	516
	20	630	0	376	1008	0	386	1148	0	407	1242	0	421	1512	0	470	1800	0	495	1935	0	512	2268	0	540
	22	621	0	381	999	0	391	1134	0	415	1224	0	432	1496	0	482	1789	0	515	1957	0	531	2257	0	562
	24	612	0	386	990	0	396	1124	0	424	1213	0	442	1483	0	493	1778	0	535	1946	0	551	2225	0	585
1.8	16	900	0	555	1425	0	570	1625	0	594	1758	0	611	2140	0	683	2528	0	692	2758	0	711	3183	0	746
	18	888	0	563	1413	0	578	1609	0	607	1740	0	626	2118	0	701	2515	0	728	2748	0	743	3170	0	782
	20	875	0	570	1400	0	585	1595	0	617	1725	0	638	2100	0	713	2500	0	750	2688	0	776	3150	0	818
	22	863	0	578	1388	0	593	1575	0	629	1700	0	654	2078	0	730	2485	0	780	2718	0	805	3135	0	851
	24	850	0	585	1375	0	600	1561	0	642	1685	0	670	2060	0	747	2470	0	810	2703	0	836	3090	0	886
2.5	16	1404	0	847	2223	0	870	2534	0	907	2742	0	932	3338	0	1043	3943	0	1057	4302	0	1085	4965	0	1139
	18	1385	0	859	2204	0	882	2510	0	926	2714	0	956	3303	0	1069	3923	0	1111	4286	0	1134	4945	0	1193
	20	1365	0	870	2184	0	893	2488	0	941	2691	0	973	3276	0	1088	3900	0	1145	4193	0	1185	4914	0	1248
	22	1346	0	882	2165	0	905	2457	0	961	2652	0	998	3241	0	1114	3877	0	1191	4239	0	1229	4891	0	1300
	24	1326	0	893	2145	0	916	2435	0	980	2629	0	1022	3214	0	1140	3853	0	1237	4216	0	1276	4820	0	1352
3.5	16	1728	0	1147	2736	0	1178	3119	0	1228	3374	0	1262	4109	0	1412	4853	0	1431	5294	0	1469	6110	0	1542
	18	1704	0	1163	2712	0	1194	3089	0	1254	3341	0	1294	4066	0	1448	4829	0	1504	5275	0	1535	6086	0	1615
	20	1680	0	1178	2688	0	1209	3062	0	1274	3312	0	1318	4032	0	1473	4800	0	1550	5160	0	1604	6048	0	1690
	22	1656	0	1194	2664	0	1225	3024	0	1301	3264	0	1352	3989	0	1508	4771	0	1612	5218	0	1663	6019	0	1759
	24	1632	0	1209	2640	0	1240	2997	0	1326	3235	0	1384	3955	0	1544	4742	0	1674	5189	0	1727	5933	0	1831
5	16	2340	0	1776	3705	0	1824	4224	0	1902	4570	0	1954	5564	0	2186	6572	0	2215	7170	0	2275	8275	0	2388
	18	2308	0	1800	3673	0	1848	4183	0	1942	4524	0	2004	5506	0	2242	6539	0	2328	7144	0	2376	8242	0	2501
	20	2275	0	1824	3640	0	1872	4147	0	1973	4485	0	2040	5460	0	2280	6500	0	2400	6988	0	2484	8190	0	2616
	22	2243	0	1848	3608	0	1896	4095	0	2014	4420	0	2093	5402	0	2335	6461	0	2496	7066	0	2575	8151	0	2724
	24	2210	0	1872	3575	0	1920	4059	0	2054	4381	0	2143	5356	0	2390	6422	0	2592	7027	0	2674	8034	0	2834
1.2+1.2	16	1296	0	725	2052	0	745	2339	0	777	2531	0	798	3082	0	893	3640	0	905	3971	0	929	4583	0	975
	18	1278	0	735	2034	0	755	2317	0	793	2506	0	818	3049	0	915	3622	0	951	3956	0	970	4565	0	1021
	20	1260	0	745	2016	0	764	2297	0	806	2484	0	833	3024	0	931	3600	0	980	3870	0	1014	4536	0	1068
	22	1242	0	755	1998	0	774	2268	0	822	2448	0	855	2992	0	954	3578	0	1019	3913	0	1052	4514	0	1112
	24	1224	0	764	1980	0	784	2248	0	839	2426	0	875	2966	0	976	3557	0	1058	3892	0	1092	4450	0	1157
1.2+1.8	16	1548	0	873	2451	0	897	2794	0	935	3023	0	961	3681	0	1075	4347	0	1089	4743	0	1119	5474	0	1174
	18	1527	0	885	2430	0	909	2767	0	955	2993	0	985	3642	0	1102	4326	0	1145	4726	0	1168	5452	0	1230
	20	1505	0	897	2408	0	920	2743	0	970	2967	0	1003	3612	0	1121	4300	0	1180	4623	0	1221	5418	0	1286
	22	1484	0	909	2387	0	932	2709	0	990	2924	0	1029	3573	0	1148	4274	0	1227	4674	0	1266	5392	0	1339
	24	1462	0	920	2365	0	944	2685	0	1010	2898	0	1054	3543	0	1175	4248	0	1274	4648	0	1315	5315	0	1394

EWB : Evaporator Wet Bulb temperature (°C)

EDB : Evaporator Dry Bulb temperature (°C)

(°CDB) : Outdoor Unit Inlet Air Dry Temperature (°C)

TC : Total Capacity (W)

SHC : Sensible Heating Capacity (W)

PI : Power Input

	INDOOR	OUTDOOR TEMPERATURE (°CDW)																							
	EDB	-15			-10			-7			-5			0			7			10			15		
	°C	TC	SHC	PI	TC	SHC	PI	TC	SHC	PI	TC	SHC	PI	TC	SHC	PI	TC	SHC	PI	TC	SHC	PI	TC	SHC	PI
1.2+2.5	16	2052	0	1147	3249	0	1178	3704	0	1228	4007	0	1262	4879	0	1412	5763	0	1431	6287	0	1469	7256	0	1542
	18	2024	0	1163	3221	0	1194	3669	0	1254	3967	0	1294	4828	0	1448	5734	0	1504	6264	0	1535	7228	0	1615
	20	1995	0	1178	3192	0	1209	3637	0	1274	3933	0	1318	4788	0	1473	5700	0	1550	6128	0	1604	7182	0	1690
	22	1967	0	1194	3164	0	1225	3591	0	1301	3876	0	1352	4737	0	1508	5666	0	1612	6196	0	1663	7148	0	1759
	24	1938	0	1209	3135	0	1240	3559	0	1326	3842	0	1384	4697	0	1544	5632	0	1674	6162	0	1727	7045	0	1831
1.2+3.5	16	2376	0	1369	3762	0	1406	4289	0	1466	4640	0	1506	5650	0	1685	6673	0	1708	7280	0	1754	8402	0	1841
	18	2343	0	1388	3729	0	1425	4248	0	1497	4594	0	1545	5590	0	1728	6640	0	1795	7253	0	1832	8369	0	1928
	20	2310	0	1406	3696	0	1443	4211	0	1521	4554	0	1573	5544	0	1758	6600	0	1850	7095	0	1915	8316	0	2017
	22	2277	0	1425	3663	0	1462	4158	0	1553	4488	0	1613	5485	0	1800	6560	0	1924	7174	0	1985	8276	0	2100
	24	2244	0	1443	3630	0	1480	4121	0	1583	4448	0	1652	5438	0	1843	6521	0	1998	7135	0	2061	8158	0	2185
1.2+5	16	2592	0	1532	4104	0	1573	4679	0	1640	5062	0	1685	6163	0	1886	7279	0	1911	7942	0	1962	9166	0	2060
	18	2556	0	1553	4068	0	1594	4634	0	1675	5011	0	1728	6098	0	1933	7243	0	2008	7913	0	2049	9130	0	2157
	20	2520	0	1573	4032	0	1615	4594	0	1702	4968	0	1760	6048	0	1967	7200	0	2070	7740	0	2142	9072	0	2256
	22	2484	0	1594	3996	0	1635	4536	0	1737	4896	0	1805	5983	0	2014	7157	0	2153	7826	0	2221	9029	0	2349
	24	2448	0	1615	3960	0	1656	4496	0	1772	4853	0	1849	5933	0	2062	7114	0	2236	7783	0	2306	8899	0	2445
1.8+1.8	16	1800	0	1080	2850	0	1110	3249	0	1157	3515	0	1188	4280	0	1330	5055	0	1348	5515	0	1384	6365	0	1453
	18	1775	0	1095	2825	0	1124	3218	0	1181	3480	0	1219	4235	0	1364	5030	0	1416	5495	0	1445	6340	0	1521
	20	1750	0	1110	2800	0	1139	3190	0	1200	3450	0	1241	4200	0	1387	5000	0	1460	5375	0	1511	6300	0	1591
	22	1725	0	1124	2775	0	1153	3150	0	1225	3400	0	1273	4155	0	1421	4970	0	1518	5435	0	1567	6270	0	1657
	24	1700	0	1139	2750	0	1168	3122	0	1249	3370	0	1304	4120	0	1454	4940	0	1577	5405	0	1626	6180	0	1724
1.8+2.5	16	2232	0	1347	3534	0	1383	4029	0	1442	4359	0	1481	5307	0	1658	6268	0	1680	6839	0	1725	7893	0	1811
	18	2201	0	1365	3503	0	1401	3990	0	1472	4315	0	1520	5251	0	1700	6237	0	1765	6814	0	1802	7862	0	1896
	20	2170	0	1383	3472	0	1420	3956	0	1496	4278	0	1547	5208	0	1729	6200	0	1820	6665	0	1884	7812	0	1984
	22	2139	0	1401	3441	0	1438	3906	0	1527	4216	0	1587	5152	0	1771	6163	0	1893	6739	0	1953	7775	0	2066
	24	2108	0	1420	3410	0	1456	3871	0	1558	4179	0	1625	5109	0	1813	6126	0	1966	6702	0	2027	7663	0	2149
1.8+3.5	16	2448	0	1476	3876	0	1516	4419	0	1581	4780	0	1624	5821	0	1817	6875	0	1841	7500	0	1891	8656	0	1985
	18	2414	0	1496	3842	0	1536	4376	0	1614	4733	0	1666	5760	0	1863	6841	0	1935	7473	0	1975	8622	0	2079
	20	2380	0	1516	3808	0	1556	4338	0	1640	4692	0	1696	5712	0	1895	6800	0	1995	7310	0	2065	8568	0	2175
	22	2346	0	1536	3774	0	1576	4284	0	1674	4624	0	1740	5651	0	1941	6759	0	2075	7392	0	2141	8527	0	2264
	24	2312	0	1556	3740	0	1596	4246	0	1707	4583	0	1782	5603	0	1987	6718	0	2155	7351	0	2222	8405	0	2356
1.8+5	16	2520	0	1517	3990	0	1558	4549	0	1624	4921	0	1669	5992	0	1868	7077	0	1892	7721	0	1943	8911	0	2040
	18	2485	0	1538	3955	0	1579	4505	0	1658	4872	0	1712	5929	0	1915	7042	0	1989	7693	0	2030	8876	0	2136
	20	2450	0	1558	3920	0	1599	4466	0	1685	4830	0	1743	5880	0	1948	7000	0	2050	7525	0	2122	8820	0	2235
	22	2415	0	1579	3885	0	1620	4410	0	1720	4760	0	1788	5817	0	1995	6958	0	2132	7609	0	2200	8778	0	2327
	24	2380	0	1599	3850	0	1640	4371	0	1754	4718	0	1831	5768	0	2042	6916	0	2214	7567	0	2284	8652	0	2421
2.5+2.5	16	2448	0	1491	3876	0	1531	4419	0	1597	4780	0	1640	5821	0	1836	6875	0	1860	7500	0	1910	8656	0	2005
	18	2414	0	1511	3842	0	1552	4376	0	1630	4733	0	1683	5760	0	1882	6841	0	1955	7473	0	1995	8622	0	2100
	20	2380	0	1531	3808	0	1572	4338	0	1656	4692	0	1713	5712	0	1914	6800	0	2015	7310	0	2086	8568	0	2196
	22	2346	0	1552	3774	0	1592	4284	0	1691	4624	0	1757	5651	0	1961	6759	0	2096	7392	0	2162	8527	0	2287
	24	2312	0	1572	3740	0	1612	4246	0	1724	4583	0	1799	5603	0	2007	6718	0	2176	7351	0	2245	8405	0	2380

EWB : Evaporator Wet Bulb temperature (°C)

EDB : Evaporator Dry Bulb temperature (°C)

(°CDB) : Outdoor Unit Inlet Air Dry Temperature (°C)

TC : Total Capacity (W)

SHC : Sensible Heating Capacity (W)

PI : Power Input

	INDOOR	OUTDOOR TEMPERATURE (°CDW)																							
	EDB	-15			-10			-7			-5			0			7			10			15		
	°C	TC	SHC	PI	TC	SHC	PI	TC	SHC	PI	TC	SHC	PI	TC	SHC	PI	TC	SHC	PI	TC	SHC	PI	TC	SHC	PI
2.5+3.5	16	2520	0	1532	3990	0	1573	4549	0	1640	4921	0	1685	5992	0	1886	7077	0	1911	7721	0	1962	8911	0	2060
	18	2485	0	1553	3955	0	1594	4505	0	1675	4872	0	1728	5929	0	1933	7042	0	2008	7693	0	2049	8876	0	2157
	20	2450	0	1573	3920	0	1615	4466	0	1702	4830	0	1760	5880	0	1967	7000	0	2070	7525	0	2142	8820	0	2256
	22	2415	0	1594	3885	0	1635	4410	0	1737	4760	0	1805	5817	0	2014	6958	0	2153	7609	0	2221	8778	0	2349
	24	2380	0	1615	3850	0	1656	4371	0	1772	4718	0	1849	5768	0	2062	6916	0	2236	7567	0	2306	8652	0	2445
3.5+3.5	16	2592	0	1561	4104	0	1604	4679	0	1672	5062	0	1718	6163	0	1922	7279	0	1948	7942	0	2000	9166	0	2099
	18	2556	0	1583	4068	0	1625	4634	0	1707	5011	0	1762	6098	0	1971	7243	0	2047	7913	0	2089	9130	0	2199
	20	2520	0	1604	4032	0	1646	4594	0	1734	4968	0	1794	6048	0	2005	7200	0	2110	7740	0	2184	9072	0	2300
	22	2484	0	1625	3996	0	1667	4536	0	1771	4896	0	1840	5983	0	2053	7157	0	2194	7826	0	2264	9029	0	2395
	24	2448	0	1646	3960	0	1688	4496	0	1806	4853	0	1884	5933	0	2102	7114	0	2279	7783	0	2351	8899	0	2492
2.5+5	16	2592	0	1561	4104	0	1604	4679	0	1672	5062	0	1718	6163	0	1922	7279	0	1948	7942	0	2000	9166	0	2099
	18	2556	0	1583	4068	0	1625	4634	0	1707	5011	0	1762	6098	0	1971	7243	0	2047	7913	0	2089	9130	0	2199
	20	2520	0	1604	4032	0	1646	4594	0	1734	4968	0	1794	6048	0	2005	7200	0	2110	7740	0	2184	9072	0	2300
	22	2484	0	1625	3996	0	1667	4536	0	1771	4896	0	1840	5983	0	2053	7157	0	2194	7826	0	2264	9029	0	2395
	24	2448	0	1646	3960	0	1688	4496	0	1806	4853	0	1884	5933	0	2102	7114	0	2279	7783	0	2351	8899	0	2492
3.5+5	16	2592	0	1561	4104	0	1604	4679	0	1672	5062	0	1718	6163	0	1922	7279	0	1948	7942	0	2000	9166	0	2099
	18	2556	0	1583	4068	0	1625	4634	0	1707	5011	0	1762	6098	0	1971	7243	0	2047	7913	0	2089	9130	0	2199
	20	2520	0	1604	4032	0	1646	4594	0	1734	4968	0	1794	6048	0	2005	7200	0	2110	7740	0	2184	9072	0	2300
	22	2484	0	1625	3996	0	1667	4536	0	1771	4896	0	1840	5983	0	2053	7157	0	2194	7826	0	2264	9029	0	2395
	24	2448	0	1646	3960	0	1688	4496	0	1806	4853	0	1884	5933	0	2102	7114	0	2279	7783	0	2351	8899	0	2492
1.2+1.2+1.2	16	1944	0	1095	3078	0	1125	3509	0	1173	3796	0	1205	4622	0	1348	5459	0	1366	5956	0	1403	6874	0	1473
	18	1917	0	1110	3051	0	1140	3475	0	1197	3758	0	1236	4574	0	1382	5432	0	1436	5935	0	1465	6847	0	1542
	20	1890	0	1125	3024	0	1154	3445	0	1217	3726	0	1258	4536	0	1406	5400	0	1480	5805	0	1532	6804	0	1613
	22	1863	0	1140	2997	0	1169	3402	0	1242	3672	0	1291	4487	0	1440	5368	0	1539	5870	0	1588	6772	0	1680
	24	1836	0	1154	2970	0	1184	3372	0	1267	3640	0	1322	4450	0	1474	5335	0	1598	5837	0	1649	6674	0	1748
1.2+1.2+1.8	16	2196	0	1169	3477	0	1201	3964	0	1252	4288	0	1286	5222	0	1439	6167	0	1458	6728	0	1498	7765	0	1572
	18	2166	0	1185	3447	0	1217	3926	0	1278	4246	0	1319	5167	0	1476	6137	0	1533	6704	0	1564	7735	0	1646
	20	2135	0	1201	3416	0	1232	3892	0	1299	4209	0	1343	5124	0	1501	6100	0	1580	6558	0	1635	7686	0	1722
	22	2105	0	1217	3386	0	1248	3843	0	1326	4148	0	1378	5069	0	1537	6063	0	1643	6631	0	1695	7649	0	1793
	24	2074	0	1232	3355	0	1264	3809	0	1352	4111	0	1411	5026	0	1574	6027	0	1706	6594	0	1760	7540	0	1866
1.2+1.2+2.5	16	2592	0	1406	4104	0	1444	4679	0	1506	5062	0	1547	6163	0	1731	7279	0	1754	7942	0	1801	9166	0	1891
	18	2556	0	1425	4068	0	1463	4634	0	1537	5011	0	1587	6098	0	1775	7243	0	1843	7913	0	1881	9130	0	1980
	20	2520	0	1444	4032	0	1482	4594	0	1562	4968	0	1615	6048	0	1805	7200	0	1900	7740	0	1967	9072	0	2071
	22	2484	0	1463	3996	0	1501	4536	0	1594	4896	0	1657	5983	0	1849	7157	0	1976	7826	0	2039	9029	0	2157
	24	2448	0	1482	3960	0	1520	4496	0	1626	4853	0	1697	5933	0	1892	7114	0	2052	7783	0	2117	8899	0	2244
1.2+1.2+3.5	16	2592	0	1406	4104	0	1444	4679	0	1506	5062	0	1547	6163	0	1731	7279	0	1754	7942	0	1801	9166	0	1891
	18	2556	0	1425	4068	0	1463	4634	0	1537	5011	0	1587	6098	0	1775	7243	0	1843	7913	0	1881	9130	0	1980
	20	2520	0	1444	4032	0	1482	4594	0	1562	4968	0	1615	6048	0	1805	7200	0	1900	7740	0	1967	9072	0	2071
	22	2484	0	1463	3996	0	1501	4536	0	1594	4896	0	1657	5983	0	1849	7157	0	1976	7826	0	2039	9029	0	2157
	24	2448	0	1482	3960	0	1520	4496	0	1626	4853	0	1697	5933	0	1892	7114	0	2052	7783	0	2117	8899	0	2244

EWB : Evaporator Wet Bulb temperature (°C)

EDB : Evaporator Dry Bulb temperature (°C)

(°CDB) : Outdoor Unit Inlet Air Dry Temperature (°C)

TC : Total Capacity (W)

SHC : Sensible Heating Capacity (W)

PI : Power Input

	INDOOR	OUTDOOR TEMPERATURE (°CDW)																							
	EDB	-15			-10			-7			-5			0			7			10			15		
	°C	TC	SHC	PI	TC	SHC	PI	TC	SHC	PI	TC	SHC	PI	TC	SHC	PI	TC	SHC	PI	TC	SHC	PI	TC	SHC	PI
1.2+1.2+5	16	2592	0	1406	4104	0	1444	4679	0	1506	5062	0	1547	6163	0	1731	7279	0	1754	7942	0	1801	9166	0	1891
	18	2556	0	1425	4068	0	1463	4634	0	1537	5011	0	1587	6098	0	1775	7243	0	1843	7913	0	1881	9130	0	1980
	20	2520	0	1444	4032	0	1482	4594	0	1562	4968	0	1615	6048	0	1805	7200	0	1900	7740	0	1967	9072	0	2071
	22	2484	0	1463	3996	0	1501	4536	0	1594	4896	0	1657	5983	0	1849	7157	0	1976	7826	0	2039	9029	0	2157
	24	2448	0	1482	3960	0	1520	4496	0	1626	4853	0	1697	5933	0	1892	7114	0	2052	7783	0	2117	8899	0	2244
1.2+1.8+1.8	16	2448	0	1295	3876	0	1330	4419	0	1387	4780	0	1425	5821	0	1594	6875	0	1615	7500	0	1659	8656	0	1741
	18	2414	0	1313	3842	0	1348	4376	0	1416	4733	0	1461	5760	0	1635	6841	0	1698	7473	0	1733	8622	0	1824
	20	2380	0	1330	3808	0	1365	4338	0	1439	4692	0	1488	5712	0	1663	6800	0	1750	7310	0	1811	8568	0	1908
	22	2346	0	1348	3774	0	1383	4284	0	1469	4624	0	1526	5651	0	1703	6759	0	1820	7392	0	1878	8527	0	1986
	24	2312	0	1365	3740	0	1400	4246	0	1498	4583	0	1563	5603	0	1743	6718	0	1890	7351	0	1950	8405	0	2067
1.2+1.8+2.5	16	2592	0	1406	4104	0	1444	4679	0	1506	5062	0	1547	6163	0	1731	7279	0	1754	7942	0	1801	9166	0	1891
	18	2556	0	1425	4068	0	1463	4634	0	1537	5011	0	1587	6098	0	1775	7243	0	1843	7913	0	1881	9130	0	1980
	20	2520	0	1444	4032	0	1482	4594	0	1562	4968	0	1615	6048	0	1805	7200	0	1900	7740	0	1967	9072	0	2071
	22	2484	0	1463	3996	0	1501	4536	0	1594	4896	0	1657	5983	0	1849	7157	0	1976	7826	0	2039	9029	0	2157
	24	2448	0	1482	3960	0	1520	4496	0	1626	4853	0	1697	5933	0	1892	7114	0	2052	7783	0	2117	8899	0	2244
1.2+1.8+3.5	16	2592	0	1406	4104	0	1444	4679	0	1506	5062	0	1547	6163	0	1731	7279	0	1754	7942	0	1801	9166	0	1891
	18	2556	0	1425	4068	0	1463	4634	0	1537	5011	0	1587	6098	0	1775	7243	0	1843	7913	0	1881	9130	0	1980
	20	2520	0	1444	4032	0	1482	4594	0	1562	4968	0	1615	6048	0	1805	7200	0	1900	7740	0	1967	9072	0	2071
	22	2484	0	1463	3996	0	1501	4536	0	1594	4896	0	1657	5983	0	1849	7157	0	1976	7826	0	2039	9029	0	2157
	24	2448	0	1482	3960	0	1520	4496	0	1626	4853	0	1697	5933	0	1892	7114	0	2052	7783	0	2117	8899	0	2244
1.2+1.8+5	16	2592	0	1406	4104	0	1444	4679	0	1506	5062	0	1547	6163	0	1731	7279	0	1754	7942	0	1801	9166	0	1891
	18	2556	0	1425	4068	0	1463	4634	0	1537	5011	0	1587	6098	0	1775	7243	0	1843	7913	0	1881	9130	0	1980
	20	2520	0	1444	4032	0	1482	4594	0	1562	4968	0	1615	6048	0	1805	7200	0	1900	7740	0	1967	9072	0	2071
	22	2484	0	1463	3996	0	1501	4536	0	1594	4896	0	1657	5983	0	1849	7157	0	1976	7826	0	2039	9029	0	2157
	24	2448	0	1482	3960	0	1520	4496	0	1626	4853	0	1697	5933	0	1892	7114	0	2052	7783	0	2117	8899	0	2244
1.2+2.5+2.5	16	2592	0	1406	4104	0	1444	4679	0	1506	5062	0	1547	6163	0	1731	7279	0	1754	7942	0	1801	9166	0	1891
	18	2556	0	1425	4068	0	1463	4634	0	1537	5011	0	1587	6098	0	1775	7243	0	1843	7913	0	1881	9130	0	1980
	20	2520	0	1444	4032	0	1482	4594	0	1562	4968	0	1615	6048	0	1805	7200	0	1900	7740	0	1967	9072	0	2071
	22	2484	0	1463	3996	0	1501	4536	0	1594	4896	0	1657	5983	0	1849	7157	0	1976	7826	0	2039	9029	0	2157
	24	2448	0	1482	3960	0	1520	4496	0	1626	4853	0	1697	5933	0	1892	7114	0	2052	7783	0	2117	8899	0	2244
1.2+2.5+3.5	16	2592	0	1406	4104	0	1444	4679	0	1506	5062	0	1547	6163	0	1731	7279	0	1754	7942	0	1801	9166	0	1891
	18	2556	0	1425	4068	0	1463	4634	0	1537	5011	0	1587	6098	0	1775	7243	0	1843	7913	0	1881	9130	0	1980
	20	2520	0	1444	4032	0	1482	4594	0	1562	4968	0	1615	6048	0	1805	7200	0	1900	7740	0	1967	9072	0	2071
	22	2484	0	1463	3996	0	1501	4536	0	1594	4896	0	1657	5983	0	1849	7157	0	1976	7826	0	2039	9029	0	2157
	24	2448	0	1482	3960	0	1520	4496	0	1626	4853	0	1697	5933	0	1892	7114	0	2052	7783	0	2117	8899	0	2244
1.2+3.5+3.5	16	2592	0	1406	4104	0	1444	4679	0	1506	5062	0	1547	6163	0	1731	7279	0	1754	7942	0	1801	9166	0	1891
	18	2556	0	1425	4068	0	1463	4634	0	1537	5011	0	1587	6098	0	1775	7243	0	1843	7913	0	1881	9130	0	1980
	20	2520	0	1444	4032	0	1482	4594	0	1562	4968	0	1615	6048	0	1805	7200	0	1900	7740	0	1967	9072	0	2071
	22	2484	0	1463	3996	0	1501	4536	0	1594	4896	0	1657	5983	0	1849	7157	0	1976	7826	0	2039	9029	0	2157
	24	2448	0	1482	3960	0	1520	4496	0	1626	4853	0	1697	5933	0	1892	7114	0	2052	7783	0	2117	8899	0	2244

EWB : Evaporator Wet Bulb temperature (°C)

EDB : Evaporator Dry Bulb temperature (°C)

(°CDB) : Outdoor Unit Inlet Air Dry Temperature (°C)

TC : Total Capacity (W)

SHC : Sensible Heating Capacity (W)

PI : Power Input

	INDOOR	OUTDOOR TEMPERATURE (°CDW)																							
	EDB	-15			-10			-7			-5			0			7			10			15		
	°C	TC	SHC	PI	TC	SHC	PI	TC	SHC	PI	TC	SHC	PI	TC	SHC	PI	TC	SHC	PI	TC	SHC	PI	TC	SHC	PI
1.8+1.8+1.8	16	2520	0	1369	3989	0	1406	4548	0	1466	4920	0	1506	5991	0	1685	7076	0	1708	7720	0	1754	8910	0	1841
	18	2485	0	1388	3954	0	1425	4505	0	1497	4871	0	1545	5928	0	1728	7041	0	1795	7692	0	1832	8875	0	1928
	20	2450	0	1406	3919	0	1443	4465	0	1521	4829	0	1573	5879	0	1758	6999	0	1850	7524	0	1915	8819	0	2017
	22	2415	0	1425	3884	0	1462	4409	0	1553	4759	0	1613	5816	0	1800	6957	0	1924	7608	0	1985	8777	0	2100
	24	2380	0	1443	3849	0	1480	4370	0	1583	4717	0	1652	5767	0	1843	6915	0	1998	7566	0	2061	8651	0	2185
1.8+1.8+2.5	16	2592	0	1406	4104	0	1444	4679	0	1506	5062	0	1547	6163	0	1731	7279	0	1754	7942	0	1801	9166	0	1891
	18	2556	0	1425	4068	0	1463	4634	0	1537	5011	0	1587	6098	0	1775	7243	0	1843	7913	0	1881	9130	0	1980
	20	2520	0	1444	4032	0	1482	4594	0	1562	4968	0	1615	6048	0	1805	7200	0	1900	7740	0	1967	9072	0	2071
	22	2484	0	1463	3996	0	1501	4536	0	1594	4896	0	1657	5983	0	1849	7157	0	1976	7826	0	2039	9029	0	2157
	24	2448	0	1482	3960	0	1520	4496	0	1626	4853	0	1697	5933	0	1892	7114	0	2052	7783	0	2117	8899	0	2244
1.8+1.8+3.5	16	2592	0	1406	4104	0	1444	4679	0	1506	5062	0	1547	6163	0	1731	7279	0	1754	7942	0	1801	9166	0	1891
	18	2556	0	1425	4068	0	1463	4634	0	1537	5011	0	1587	6098	0	1775	7243	0	1843	7913	0	1881	9130	0	1980
	20	2520	0	1444	4032	0	1482	4594	0	1562	4968	0	1615	6048	0	1805	7200	0	1900	7740	0	1967	9072	0	2071
	22	2484	0	1463	3996	0	1501	4536	0	1594	4896	0	1657	5983	0	1849	7157	0	1976	7826	0	2039	9029	0	2157
	24	2448	0	1482	3960	0	1520	4496	0	1626	4853	0	1697	5933	0	1892	7114	0	2052	7783	0	2117	8899	0	2244
1.8+1.8+5	16	2592	0	1406	4104	0	1444	4679	0	1506	5062	0	1547	6163	0	1731	7279	0	1754	7942	0	1801	9166	0	1891
	18	2556	0	1425	4068	0	1463	4634	0	1537	5011	0	1587	6098	0	1775	7243	0	1843	7913	0	1881	9130	0	1980
	20	2520	0	1444	4032	0	1482	4594	0	1562	4968	0	1615	6048	0	1805	7200	0	1900	7740	0	1967	9072	0	2071
	22	2484	0	1463	3996	0	1501	4536	0	1594	4896	0	1657	5983	0	1849	7157	0	1976	7826	0	2039	9029	0	2157
	24	2448	0	1482	3960	0	1520	4496	0	1626	4853	0	1697	5933	0	1892	7114	0	2052	7783	0	2117	8899	0	2244
1.8+2.5+2.5	16	2592	0	1406	4104	0	1444	4679	0	1506	5062	0	1547	6163	0	1731	7279	0	1754	7942	0	1801	9166	0	1891
	18	2556	0	1425	4068	0	1463	4634	0	1537	5011	0	1587	6098	0	1775	7243	0	1843	7913	0	1881	9130	0	1980
	20	2520	0	1444	4032	0	1482	4594	0	1562	4968	0	1615	6048	0	1805	7200	0	1900	7740	0	1967	9072	0	2071
	22	2484	0	1463	3996	0	1501	4536	0	1594	4896	0	1657	5983	0	1849	7157	0	1976	7826	0	2039	9029	0	2157
	24	2448	0	1482	3960	0	1520	4496	0	1626	4853	0	1697	5933	0	1892	7114	0	2052	7783	0	2117	8899	0	2244
1.8+2.5+3.5	16	2592	0	1406	4104	0	1444	4679	0	1506	5062	0	1547	6163	0	1731	7279	0	1754	7942	0	1801	9166	0	1891
	18	2556	0	1425	4068	0	1463	4634	0	1537	5011	0	1587	6098	0	1775	7243	0	1843	7913	0	1881	9130	0	1980
	20	2520	0	1444	4032	0	1482	4594	0	1562	4968	0	1615	6048	0	1805	7200	0	1900	7740	0	1967	9072	0	2071
	22	2484	0	1463	3996	0	1501	4536	0	1594	4896	0	1657	5983	0	1849	7157	0	1976	7826	0	2039	9029	0	2157
	24	2448	0	1482	3960	0	1520	4496	0	1626	4853	0	1697	5933	0	1892	7114	0	2052	7783	0	2117	8899	0	2244
1.8+3.5+3.5	16	2592	0	1406	4104	0	1444	4679	0	1506	5062	0	1547	6163	0	1731	7279	0	1754	7942	0	1801	9166	0	1891
	18	2556	0	1425	4068	0	1463	4634	0	1537	5011	0	1587	6098	0	1775	7243	0	1843	7913	0	1881	9130	0	1980
	20	2520	0	1444	4032	0	1482	4594	0	1562	4968	0	1615	6048	0	1805	7200	0	1900	7740	0	1967	9072	0	2071
	22	2484	0	1463	3996	0	1501	4536	0	1594	4896	0	1657	5983	0	1849	7157	0	1976	7826	0	2039	9029	0	2157
	24	2448	0	1482	3960	0	1520	4496	0	1626	4853	0	1697	5933	0	1892	7114	0	2052	7783	0	2117	8899	0	2244
2.5+2.5+2.5	16	2592	0	1406	4104	0	1444	4679	0	1506	5062	0	1547	6163	0	1731	7279	0	1754	7942	0	1801	9166	0	1891
	18	2556	0	1425	4068	0	1463	4634	0	1537	5011	0	1587	6098	0	1775	7243	0	1843	7913	0	1881	9130	0	1980
	20	2520	0	1444	4032	0	1482	4594	0	1562	4968	0	1615	6048	0	1805	7200	0	1900	7740	0	1967	9072	0	2071
	22	2484	0	1463	3996	0	1501	4536	0	1594	4896	0	1657	5983	0	1849	7157	0	1976	7826	0	2039	9029	0	2157
	24	2448	0	1482	3960	0	1520	4496	0	1626	4853	0	1697	5933	0	1892	7114	0	2052	7783	0	2117	8899	0	2244

EWB : Evaporator Wet Bulb temperature (°C)

EDB : Evaporator Dry Bulb temperature (°C)

(°CDB) : Outdoor Unit Inlet Air Dry Temperature (°C)

TC : Total Capacity (W)

SHC : Sensible Heating Capacity (W)

PI : Power Input

	INDOOR	OUTDOOR TEMPERATURE (°CDW)																							
	EDB	-15			-10			-7			-5			0			7			10			15		
	°C	TC	SHC	PI	TC	SHC	PI	TC	SHC	PI	TC	SHC	PI	TC	SHC	PI	TC	SHC	PI	TC	SHC	PI	TC	SHC	PI
2.5+2.5+3.5	16	2592	0	1406	4104	0	1444	4679	0	1506	5062	0	1547	6163	0	1731	7279	0	1754	7942	0	1801	9166	0	1891
	18	2556	0	1425	4068	0	1463	4634	0	1537	5011	0	1587	6098	0	1775	7243	0	1843	7913	0	1881	9130	0	1980
	20	2520	0	1444	4032	0	1482	4594	0	1562	4968	0	1615	6048	0	1805	7200	0	1900	7740	0	1967	9072	0	2071
	22	2484	0	1463	3996	0	1501	4536	0	1594	4896	0	1657	5983	0	1849	7157	0	1976	7826	0	2039	9029	0	2157
	24	2448	0	1482	3960	0	1520	4496	0	1626	4853	0	1697	5933	0	1892	7114	0	2052	7783	0	2117	8899	0	2244
(1.2+1.2)+(1.2+1.2)	16	2592	0	1450	4104	0	1490	4679	0	1553	5062	0	1595	6163	0	1786	7279	0	1809	7942	0	1858	9166	0	1950
	18	2556	0	1470	4068	0	1509	4634	0	1586	5011	0	1637	6098	0	1831	7243	0	1901	7913	0	1940	9130	0	2042
	20	2520	0	1490	4032	0	1529	4594	0	1611	4968	0	1666	6048	0	1862	7200	0	1960	7740	0	2029	9072	0	2136
	22	2484	0	1509	3996	0	1548	4536	0	1645	4896	0	1709	5983	0	1907	7157	0	2038	7826	0	2103	9029	0	2225
	24	2448	0	1529	3960	0	1568	4496	0	1677	4853	0	1750	5933	0	1952	7114	0	2117	7783	0	2183	8899	0	2315
(1.2+1.2)+(1.2+1.8)	16	2844	0	1598	4503	0	1642	5133	0	1712	5554	0	1758	6762	0	1968	7987	0	1994	8714	0	2048	10057	0	2149
	18	2805	0	1620	4464	0	1663	5084	0	1747	5498	0	1804	6691	0	2017	7947	0	2095	8682	0	2138	10017	0	2251
	20	2765	0	1642	4424	0	1685	5040	0	1776	5451	0	1836	6636	0	2052	7900	0	2160	8493	0	2236	9954	0	2354
	22	2726	0	1663	4385	0	1706	4977	0	1813	5372	0	1884	6565	0	2102	7853	0	2246	8587	0	2318	9907	0	2452
	24	2686	0	1685	4345	0	1728	4933	0	1849	5325	0	1929	6510	0	2151	7805	0	2333	8540	0	2406	9764	0	2551
(1.2+1.8)+(1.2+1.8)	16	3096	0	1746	4902	0	1794	5588	0	1870	6046	0	1921	7362	0	2150	8695	0	2178	9486	0	2237	10948	0	2348
	18	3053	0	1770	4859	0	1817	5535	0	1909	5986	0	1971	7284	0	2204	8652	0	2289	9451	0	2336	10905	0	2459
	20	3010	0	1794	4816	0	1841	5487	0	1940	5934	0	2006	7224	0	2242	8600	0	2360	9245	0	2443	10836	0	2572
	22	2967	0	1817	4773	0	1864	5418	0	1981	5848	0	2058	7147	0	2296	8548	0	2454	9348	0	2532	10784	0	2679
	24	2924	0	1841	4730	0	1888	5370	0	2020	5796	0	2107	7086	0	2351	8497	0	2549	9297	0	2629	10630	0	2787
(1.2+1.2)+(1.2+2.5)	16	3348	0	1872	5301	0	1923	6043	0	2005	6538	0	2059	7961	0	2305	9402	0	2335	10258	0	2398	11839	0	2517
	18	3302	0	1898	5255	0	1948	5985	0	2047	6473	0	2113	7877	0	2363	9356	0	2454	10221	0	2505	11792	0	2636
	20	3255	0	1923	5208	0	1973	5933	0	2080	6417	0	2151	7812	0	2404	9300	0	2530	9998	0	2619	11718	0	2758
	22	3209	0	1948	5162	0	1999	5859	0	2123	6324	0	2206	7728	0	2462	9244	0	2631	10109	0	2715	11662	0	2872
	24	3162	0	1973	5115	0	2024	5807	0	2165	6268	0	2259	7663	0	2520	9188	0	2732	10053	0	2818	11495	0	2988
(1.2+2.5)+(1.2+2.5)	16	4104	0	2294	6498	0	2356	7408	0	2456	8014	0	2523	9758	0	2824	11525	0	2861	12574	0	2939	14512	0	3085
	18	4047	0	2325	6441	0	2387	7337	0	2508	7934	0	2589	9656	0	2895	11468	0	3007	12529	0	3069	14455	0	3230
	20	3990	0	2356	6384	0	2418	7273	0	2548	7866	0	2635	9576	0	2945	11400	0	3100	12255	0	3209	14364	0	3379
	22	3933	0	2387	6327	0	2449	7182	0	2602	7752	0	2703	9473	0	3016	11332	0	3224	12392	0	3326	14296	0	3519
	24	3876	0	2418	6270	0	2480	7118	0	2653	7684	0	2768	9394	0	3088	11263	0	3348	12323	0	3453	14090	0	3661
(1.2+1.2)+(1.2+3.5)	16	3672	0	2094	5814	0	2151	6628	0	2242	7171	0	2304	8731	0	2578	10312	0	2612	11251	0	2683	12985	0	2816
	18	3621	0	2123	5763	0	2179	6565	0	2289	7099	0	2363	8639	0	2643	10261	0	2745	11210	0	2802	12934	0	2949
	20	3570	0	2151	5712	0	2207	6508	0	2326	7038	0	2406	8568	0	2689	10200	0	2830	10965	0	2929	12852	0	3085
	22	3519	0	2179	5661	0	2236	6426	0	2375	6936	0	2468	8476	0	2754	10139	0	2943	11087	0	3037	12791	0	3212
	24	3468	0	2207	5610	0	2264	6369	0	2422	6875	0	2527	8405	0	2819	10078	0	3056	11026	0	3153	12607	0	3342
(1.2+3.5)+(1.2+3.5)	16	4752	0	2738	7524	0	2812	8577	0	2932	9280	0	3012	11299	0	3371	13345	0	3415	14560	0	3508	16804	0	3682
	18	4686	0	2775	7458	0	2849	8496	0	2993	9187	0	3090	11180	0	3456	13279	0	3589	14507	0	3663	16738	0	3855
	20	4620	0	2812	7392	0	2886	8422	0	3041	9108	0	3145	11088	0	3515	13200	0	3700	14190	0	3830	16632	0	4033
	22	4554	0	2849	7326	0	2923	8316	0	3105	8976	0	3226	10969	0	3600	13121	0	3848	14348	0	3970	16553	0	4200
	24	4488	0	2886	7260	0	2960	8242	0	3166	8897	0	3304	10877	0	3685	13042	0	3996	14269	0	4122	16315	0	4370

EWB : Evaporator Wet Bulb temperature (°C)

EDB : Evaporator Dry Bulb temperature (°C)

(°CDB) : Outdoor Unit Inlet Air Dry Temperature (°C)

TC : Total Capacity (W)

SHC : Sensible Heating Capacity (W)

PI : Power Input

	INDOOR	OUTDOOR TEMPERATURE (°CDW)																							
	EDB	-15			-10			-7			-5			0			7			10			15		
	°C	TC	SHC	PI	TC	SHC	PI	TC	SHC	PI	TC	SHC	PI	TC	SHC	PI	TC	SHC	PI	TC	SHC	PI	TC	SHC	PI
(1.2+1.2)+(1.2+5)	16	3888	0	2257	6156	0	2318	7018	0	2417	7592	0	2483	9245	0	2779	10919	0	2815	11912	0	2891	13748	0	3035
	18	3834	0	2288	6102	0	2349	6951	0	2467	7517	0	2547	9148	0	2849	10865	0	2959	11869	0	3020	13694	0	3178
	20	3780	0	2318	6048	0	2379	6890	0	2507	7452	0	2593	9072	0	2898	10800	0	3050	11610	0	3157	13608	0	3325
	22	3726	0	2349	5994	0	2410	6804	0	2560	7344	0	2660	8975	0	2968	10735	0	3172	11740	0	3273	13543	0	3462
	24	3672	0	2379	5940	0	2440	6744	0	2610	7279	0	2724	8899	0	3038	10670	0	3294	11675	0	3398	13349	0	3602
(1.2+5)+(1.2+5)	16	5184	0	3064	8208	0	3146	9357	0	3281	10123	0	3370	12326	0	3772	14558	0	3821	15883	0	3925	18331	0	4119
	18	5112	0	3105	8136	0	3188	9268	0	3349	10022	0	3457	12197	0	3867	14486	0	4016	15826	0	4099	18259	0	4314
	20	5040	0	3146	8064	0	3229	9187	0	3403	9936	0	3519	12096	0	3933	14400	0	4140	15480	0	4285	18144	0	4513
	22	4968	0	3188	7992	0	3271	9072	0	3474	9792	0	3610	11966	0	4028	14314	0	4306	15653	0	4442	18058	0	4699
	24	4896	0	3229	7920	0	3312	8991	0	3543	9706	0	3697	11866	0	4123	14227	0	4471	15566	0	4612	17798	0	4889
(1.8+1.8)+(1.8+1.8)	16	3600	0	2161	5700	0	2219	6498	0	2314	7030	0	2377	8560	0	2660	10110	0	2695	11030	0	2768	12730	0	2905
	18	3550	0	2190	5650	0	2248	6436	0	2362	6960	0	2438	8470	0	2727	10060	0	2832	10990	0	2891	12680	0	3043
	20	3500	0	2219	5600	0	2278	6380	0	2400	6900	0	2482	8400	0	2774	10000	0	2920	10750	0	3022	12600	0	3183
	22	3450	0	2248	5550	0	2307	6300	0	2450	6800	0	2546	8310	0	2841	9940	0	3037	10870	0	3133	12540	0	3314
	24	3400	0	2278	5500	0	2336	6244	0	2499	6740	0	2608	8240	0	2908	9880	0	3154	10810	0	3253	12360	0	3449
(1.8+1.8)+(1.8+2.5)	16	4032	0	2427	6384	0	2493	7278	0	2599	7874	0	2670	9587	0	2988	11323	0	3027	12354	0	3109	14258	0	3264
	18	3976	0	2460	6328	0	2526	7208	0	2654	7795	0	2739	9486	0	3064	11267	0	3182	12309	0	3247	14202	0	3418
	20	3920	0	2493	6272	0	2558	7146	0	2696	7728	0	2788	9408	0	3116	11200	0	3280	12040	0	3395	14112	0	3575
	22	3864	0	2526	6216	0	2591	7056	0	2753	7616	0	2860	9307	0	3191	11133	0	3411	12174	0	3519	14045	0	3723
	24	3808	0	2558	6160	0	2624	6993	0	2807	7549	0	2929	9229	0	3267	11066	0	3542	12107	0	3654	13843	0	3874
(1.8+2.5)+(1.8+2.5)	16	4464	0	2694	7068	0	2766	8058	0	2884	8717	0	2963	10614	0	3316	12536	0	3360	13677	0	3451	15785	0	3622
	18	4402	0	2730	7006	0	2803	7981	0	2945	8630	0	3039	10503	0	3400	12474	0	3531	13628	0	3604	15723	0	3793
	20	4340	0	2766	6944	0	2839	7911	0	2992	8556	0	3094	10416	0	3458	12400	0	3640	13330	0	3767	15624	0	3968
	22	4278	0	2803	6882	0	2876	7812	0	3055	8432	0	3174	10304	0	3542	12326	0	3786	13479	0	3906	15550	0	4131
	24	4216	0	2839	6820	0	2912	7743	0	3115	8358	0	3251	10218	0	3625	12251	0	3931	13404	0	4055	15326	0	4299
(1.8+1.8)+(1.8+3.5)	16	4248	0	2557	6726	0	2626	7668	0	2738	8295	0	2812	10101	0	3148	11930	0	3189	13015	0	3275	15021	0	3438
	18	4189	0	2591	6667	0	2660	7594	0	2795	8213	0	2885	9995	0	3227	11871	0	3351	12968	0	3420	14962	0	3600
	20	4130	0	2626	6608	0	2695	7528	0	2840	8142	0	2937	9912	0	3282	11800	0	3455	12685	0	3576	14868	0	3766
	22	4071	0	2660	6549	0	2729	7434	0	2899	8024	0	3013	9806	0	3362	11729	0	3593	12827	0	3707	14797	0	3921
	24	4012	0	2695	6490	0	2764	7368	0	2957	7953	0	3085	9723	0	3441	11658	0	3731	12756	0	3849	14585	0	4080
(1.8+2.5)+(1.8+3.5)	16	4680	0	2823	7410	0	2899	8447	0	3023	9139	0	3105	11128	0	3475	13143	0	3521	14339	0	3617	16549	0	3796
	18	4615	0	2861	7345	0	2938	8367	0	3086	9048	0	3186	11011	0	3563	13078	0	3701	14287	0	3777	16484	0	3975
	20	4550	0	2899	7280	0	2976	8294	0	3136	8970	0	3243	10920	0	3624	13000	0	3815	13975	0	3949	16380	0	4158
	22	4485	0	2938	7215	0	3014	8190	0	3202	8840	0	3327	10803	0	3712	12922	0	3968	14131	0	4093	16302	0	4330
	24	4420	0	2976	7150	0	3052	8117	0	3265	8762	0	3407	10712	0	3800	12844	0	4120	14053	0	4250	16068	0	4506
(1.8+1.8)+(1.8+5)	16	4320	0	2597	6840	0	2668	7798	0	2781	8436	0	2857	10272	0	3198	12132	0	3240	13236	0	3327	15276	0	3492
	18	4260	0	2633	6780	0	2703	7723	0	2840	8352	0	2931	10164	0	3278	12072	0	3405	13188	0	3475	15216	0	3657
	20	4200	0	2668	6720	0	2738	7656	0	2885	8280	0	2984	10080	0	3335	12000	0	3510	12900	0	3633	15120	0	3826
	22	4140	0	2703	6660	0	2773	7560	0	2946	8160	0	3061	9972	0	3415	11928	0	3650	13044	0	3766	15048	0	3984
	24	4080	0	2738	6600	0	2808	7493	0	3004	8088	0	3134	9888	0	3496	11856	0	3791	12972	0	3910	14832	0	4145

EWB : Evaporator Wet Bulb temperature (°C)

EDB : Evaporator Dry Bulb temperature (°C)

(°CDB) : Outdoor Unit Inlet Air Dry Temperature (°C)

TC : Total Capacity (W)

SHC : Sensible Heating Capacity (W)

PI : Power Input

	INDOOR	OUTDOOR TEMPERATURE (°CDW)																							
	EDB	-15			-10			-7			-5			0			7			10			15		
	°C	TC	SHC	PI	TC	SHC	PI	TC	SHC	PI	TC	SHC	PI	TC	SHC	PI	TC	SHC	PI	TC	SHC	PI	TC	SHC	PI
(1.8+2.5)+(1.8+5)	16	4752	0	2864	7524	0	2941	8577	0	3067	9280	0	3150	11299	0	3526	13345	0	3572	14560	0	3669	16804	0	3851
	18	4686	0	2903	7458	0	2980	8496	0	3131	9187	0	3231	11180	0	3615	13279	0	3754	14507	0	3831	16738	0	4033
	20	4620	0	2941	7392	0	3019	8422	0	3181	9108	0	3290	11088	0	3677	13200	0	3870	14190	0	4005	16632	0	4218
	22	4554	0	2980	7326	0	3057	8316	0	3248	8976	0	3375	10969	0	3766	13121	0	4025	14348	0	4153	16553	0	4392
	24	4488	0	3019	7260	0	3096	8242	0	3312	8897	0	3456	10877	0	3855	13042	0	4180	14269	0	4311	16315	0	4570
(1.8+3.5)+(1.8+3.5)	16	4896	0	2953	7752	0	3032	8837	0	3162	9561	0	3248	11642	0	3635	13750	0	3683	15001	0	3783	17313	0	3970
	18	4828	0	2993	7684	0	3072	8753	0	3228	9466	0	3332	11519	0	3727	13682	0	3870	14946	0	3950	17245	0	4158
	20	4760	0	3032	7616	0	3112	8677	0	3280	9384	0	3392	11424	0	3791	13600	0	3990	14620	0	4130	17136	0	4349
	22	4692	0	3072	7548	0	3152	8568	0	3348	9248	0	3479	11302	0	3882	13518	0	4150	14783	0	4281	17054	0	4529
	24	4624	0	3112	7480	0	3192	8492	0	3415	9166	0	3563	11206	0	3974	13437	0	4309	14702	0	4445	16810	0	4712
(1.8+3.5)+(1.8+5)	16	4968	0	2993	7866	0	3074	8967	0	3205	9701	0	3293	11813	0	3685	13952	0	3734	15221	0	3835	17567	0	4025
	18	4899	0	3034	7797	0	3115	8882	0	3272	9605	0	3378	11689	0	3778	13883	0	3924	15166	0	4005	17498	0	4215
	20	4830	0	3074	7728	0	3155	8804	0	3325	9522	0	3438	11592	0	3843	13800	0	4045	14835	0	4187	17388	0	4409
	22	4761	0	3115	7659	0	3196	8694	0	3395	9384	0	3527	11468	0	3936	13717	0	4207	15001	0	4340	17305	0	4591
	24	4692	0	3155	7590	0	3236	8617	0	3462	9301	0	3612	11371	0	4029	13634	0	4369	14918	0	4506	17057	0	4777
(1.8+5)+(1.8+5)	16	5040	0	3034	7980	0	3116	9097	0	3249	9842	0	3337	11984	0	3735	14154	0	3784	15442	0	3887	17822	0	4080
	18	4970	0	3075	7910	0	3157	9010	0	3317	9744	0	3424	11858	0	3829	14084	0	3977	15386	0	4059	17752	0	4272
	20	4900	0	3116	7840	0	3198	8932	0	3370	9660	0	3485	11760	0	3895	14000	0	4100	15050	0	4244	17640	0	4469
	22	4830	0	3157	7770	0	3239	8820	0	3441	9520	0	3575	11634	0	3989	13916	0	4264	15218	0	4399	17556	0	4654
	24	4760	0	3198	7700	0	3280	8742	0	3509	9436	0	3661	11536	0	4084	13832	0	4428	15134	0	4567	17304	0	4842
(1.8+2.5)+(2.5+2.5)	16	4680	0	2838	7410	0	2915	8447	0	3039	9139	0	3122	11128	0	3494	13143	0	3540	14339	0	3636	16549	0	3816
	18	4615	0	2876	7345	0	2953	8367	0	3103	9048	0	3202	11011	0	3582	13078	0	3720	14287	0	3797	16484	0	3996
	20	4550	0	2915	7280	0	2991	8294	0	3152	8970	0	3260	10920	0	3643	13000	0	3835	13975	0	3969	16380	0	4180
	22	4485	0	2953	7215	0	3030	8190	0	3218	8840	0	3344	10803	0	3731	12922	0	3988	14131	0	4115	16302	0	4353
	24	4420	0	2991	7150	0	3068	8117	0	3282	8762	0	3425	10712	0	3820	12844	0	4142	14053	0	4272	16068	0	4529
(1.8+5)+(2.5+2.5)	16	4968	0	3008	7866	0	3089	8967	0	3221	9701	0	3309	11813	0	3703	13952	0	3752	15221	0	3854	17567	0	4045
	18	4899	0	3049	7797	0	3130	8882	0	3289	9605	0	3394	11689	0	3797	13883	0	3943	15166	0	4024	17498	0	4236
	20	4830	0	3089	7728	0	3171	8804	0	3341	9522	0	3455	11592	0	3862	13800	0	4065	14835	0	4207	17388	0	4431
	22	4761	0	3130	7659	0	3211	8694	0	3411	9384	0	3545	11468	0	3955	13717	0	4228	15001	0	4362	17305	0	4614
	24	4692	0	3171	7590	0	3252	8617	0	3479	9301	0	3630	11371	0	4049	13634	0	4390	14918	0	4528	17057	0	4801
(1.8+3.5)+(2.5+2.5)	16	4896	0	2967	7752	0	3048	8837	0	3178	9561	0	3264	11642	0	3653	13750	0	3701	15001	0	3801	17313	0	3990
	18	4828	0	3008	7684	0	3088	8753	0	3244	9466	0	3348	11519	0	3745	13682	0	3890	14946	0	3970	17245	0	4178
	20	4760	0	3048	7616	0	3128	8677	0	3296	9384	0	3409	11424	0	3810	13600	0	4010	14620	0	4150	17136	0	4371
	22	4692	0	3088	7548	0	3168	8568	0	3365	9248	0	3497	11302	0	3902	13518	0	4170	14783	0	4303	17054	0	4551
	24	4624	0	3128	7480	0	3208	8492	0	3432	9166	0	3581	11206	0	3994	13437	0	4331	14702	0	4467	16810	0	4736
(1.8+3.5)+(2.5+3.5)	16	4968	0	3008	7866	0	3089	8967	0	3221	9701	0	3309	11813	0	3703	13952	0	3752	15221	0	3854	17567	0	4045
	18	4899	0	3049	7797	0	3130	8882	0	3289	9605	0	3394	11689	0	3797	13883	0	3943	15166	0	4024	17498	0	4236
	20	4830	0	3089	7728	0	3171	8804	0	3341	9522	0	3455	11592	0	3862	13800	0	4065	14835	0	4207	17388	0	4431
	22	4761	0	3130	7659	0	3211	8694	0	3411	9384	0	3545	11468	0	3955	13717	0	4228	15001	0	4362	17305	0	4614
	24	4692	0	3171	7590	0	3252	8617	0	3479	9301	0	3630	11371	0	4049	13634	0	4390	14918	0	4528	17057	0	4801

EWB : Evaporator Wet Bulb temperature (°C)

EDB : Evaporator Dry Bulb temperature (°C)

(°CDB) : Outdoor Unit Inlet Air Dry Temperature (°C)

TC : Total Capacity (W)

SHC : Sensible Heating Capacity (W)

PI : Power Input

	INDOOR	OUTDOOR TEMPERATURE (°CDW)																							
	EDB	-15			-10			-7			-5			0			7			10			15		
	°C	TC	SHC	PI	TC	SHC	PI	TC	SHC	PI	TC	SHC	PI	TC	SHC	PI	TC	SHC	PI	TC	SHC	PI	TC	SHC	PI
(1.8+5)+(2.5+3.5)	16	5040	0	3049	7980	0	3131	9097	0	3265	9842	0	3354	11984	0	3753	14154	0	3803	15442	0	3906	17822	0	4099
	18	4970	0	3090	7910	0	3172	9010	0	3333	9744	0	3440	11858	0	3848	14084	0	3996	15386	0	4079	17752	0	4293
	20	4900	0	3131	7840	0	3214	8932	0	3387	9660	0	3502	11760	0	3914	14000	0	4120	15050	0	4264	17640	0	4491
	22	4830	0	3172	7770	0	3255	8820	0	3458	9520	0	3593	11634	0	4009	13916	0	4285	15218	0	4421	17556	0	4676
	24	4760	0	3214	7700	0	3296	8742	0	3526	9436	0	3679	11536	0	4104	13832	0	4450	15134	0	4590	17304	0	4866
(1.8+5)+(2.5+5)	16	5112	0	3078	8094	0	3162	9227	0	3296	9983	0	3386	12155	0	3790	14356	0	3840	15663	0	3944	18077	0	4139
	18	5041	0	3120	8023	0	3203	9139	0	3365	9883	0	3474	12027	0	3885	14285	0	4035	15606	0	4118	18006	0	4335
	20	4970	0	3162	7952	0	3245	9060	0	3420	9798	0	3536	11928	0	3952	14200	0	4160	15265	0	4306	17892	0	4534
	22	4899	0	3203	7881	0	3286	8946	0	3491	9656	0	3628	11800	0	4048	14115	0	4326	15435	0	4464	17807	0	4722
	24	4828	0	3245	7810	0	3328	8866	0	3560	9571	0	3715	11701	0	4143	14030	0	4493	15350	0	4634	17551	0	4913
(1.8+3.5)+(3.5+3.5)	16	5040	0	3038	7980	0	3120	9097	0	3253	9842	0	3341	11984	0	3740	14154	0	3789	15442	0	3892	17822	0	4084
	18	4970	0	3079	7910	0	3161	9010	0	3321	9744	0	3428	11858	0	3834	14084	0	3982	15386	0	4064	17752	0	4277
	20	4900	0	3120	7840	0	3202	8932	0	3374	9660	0	3489	11760	0	3900	14000	0	4105	15050	0	4249	17640	0	4474
	22	4830	0	3161	7770	0	3243	8820	0	3445	9520	0	3580	11634	0	3994	13916	0	4269	15218	0	4405	17556	0	4659
	24	4760	0	3202	7700	0	3284	8742	0	3513	9436	0	3666	11536	0	4089	13832	0	4433	15134	0	4573	17304	0	4848
(1.8+5)+(3.5+3.5)	16	5112	0	3078	8094	0	3162	9227	0	3296	9983	0	3386	12155	0	3790	14356	0	3840	15663	0	3944	18077	0	4139
	18	5041	0	3120	8023	0	3203	9139	0	3365	9883	0	3474	12027	0	3885	14285	0	4035	15606	0	4118	18006	0	4335
	20	4970	0	3162	7952	0	3245	9060	0	3420	9798	0	3536	11928	0	3952	14200	0	4160	15265	0	4306	17892	0	4534
	22	4899	0	3203	7881	0	3286	8946	0	3491	9656	0	3628	11800	0	4048	14115	0	4326	15435	0	4464	17807	0	4722
	24	4828	0	3245	7810	0	3328	8866	0	3560	9571	0	3715	11701	0	4143	14030	0	4493	15350	0	4634	17551	0	4913
(1.8+5)+(3.5+5)	16	5112	0	3078	8094	0	3162	9227	0	3296	9983	0	3386	12155	0	3790	14356	0	3840	15663	0	3944	18077	0	4139
	18	5041	0	3120	8023	0	3203	9139	0	3365	9883	0	3474	12027	0	3885	14285	0	4035	15606	0	4118	18006	0	4335
	20	4970	0	3162	7952	0	3245	9060	0	3420	9798	0	3536	11928	0	3952	14200	0	4160	15265	0	4306	17892	0	4534
	22	4899	0	3203	7881	0	3286	8946	0	3491	9656	0	3628	11800	0	4048	14115	0	4326	15435	0	4464	17807	0	4722
	24	4828	0	3245	7810	0	3328	8866	0	3560	9571	0	3715	11701	0	4143	14030	0	4493	15350	0	4634	17551	0	4913
(2.5+2.5)+(2.5+2.5)	16	4896	0	2982	7752	0	3063	8837	0	3193	9561	0	3280	11642	0	3671	13750	0	3720	15001	0	3820	17313	0	4010
	18	4828	0	3023	7684	0	3103	8753	0	3260	9466	0	3365	11519	0	3764	13682	0	3909	14946	0	3990	17245	0	4199
	20	4760	0	3063	7616	0	3143	8677	0	3313	9384	0	3426	11424	0	3829	13600	0	4030	14620	0	4171	17136	0	4393
	22	4692	0	3103	7548	0	3184	8568	0	3382	9248	0	3514	11302	0	3921	13518	0	4191	14783	0	4324	17054	0	4574
	24	4624	0	3143	7480	0	3224	8492	0	3449	9166	0	3599	11206	0	4014	13437	0	4352	14702	0	4489	16810	0	4759
(2.5+2.5)+(2.5+3.5)	16	4968	0	3023	7866	0	3105	8967	0	3237	9701	0	3325	11813	0	3721	13952	0	3770	15221	0	3873	17567	0	4065
	18	4899	0	3064	7797	0	3145	8882	0	3305	9605	0	3411	11689	0	3815	13883	0	3962	15166	0	4044	17498	0	4257
	20	4830	0	3105	7728	0	3186	8804	0	3358	9522	0	3472	11592	0	3881	13800	0	4085	14835	0	4228	17388	0	4453
	22	4761	0	3145	7659	0	3227	8694	0	3428	9384	0	3562	11468	0	3975	13717	0	4248	15001	0	4383	17305	0	4636
	24	4692	0	3186	7590	0	3268	8617	0	3496	9301	0	3648	11371	0	4069	13634	0	4412	14918	0	4551	17057	0	4824
(2.5+2.5)+(2.5+5)	16	5040	0	3053	7980	0	3135	9097	0	3269	9842	0	3358	11984	0	3758	14154	0	3807	15442	0	3911	17822	0	4104
	18	4970	0	3094	7910	0	3176	9010	0	3337	9744	0	3444	11858	0	3853	14084	0	4001	15386	0	4084	17752	0	4298
	20	4900	0	3135	7840	0	3218	8932	0	3391	9660	0	3506	11760	0	3919	14000	0	4125	15050	0	4269	17640	0	4496
	22	4830	0	3176	7770	0	3259	8820	0	3462	9520	0	3597	11634	0	4014	13916	0	4290	15218	0	4426	17556	0	4682
	24	4760	0	3218	7700	0	3300	8742	0	3530	9436	0	3684	11536	0	4109	13832	0	4455	15134	0	4595	17304	0	4872

EWB : Evaporator Wet Bulb temperature (°C)

EDB : Evaporator Dry Bulb temperature (°C)

(°CDB) : Outdoor Unit Inlet Air Dry Temperature (°C)

TC : Total Capacity (W)

SHC : Sensible Heating Capacity (W)

PI : Power Input

	INDOOR	OUTDOOR TEMPERATURE (°CDW)																							
	EDB	-15			-10			-7			-5			0			7			10			15		
	°C	TC	SHC	PI	TC	SHC	PI	TC	SHC	PI	TC	SHC	PI	TC	SHC	PI	TC	SHC	PI	TC	SHC	PI	TC	SHC	PI
(2.5+3.5)+(2.5+3.5)	16	5040	0	3064	7980	0	3146	9097	0	3281	9842	0	3370	11984	0	3772	14154	0	3821	15442	0	3925	17822	0	4119
	18	4970	0	3105	7910	0	3188	9010	0	3349	9744	0	3457	11858	0	3867	14084	0	4016	15386	0	4099	17752	0	4314
	20	4900	0	3146	7840	0	3229	8932	0	3403	9660	0	3519	11760	0	3933	14000	0	4140	15050	0	4285	17640	0	4513
	22	4830	0	3188	7770	0	3271	8820	0	3474	9520	0	3610	11634	0	4028	13916	0	4306	15218	0	4442	17556	0	4699
	24	4760	0	3229	7700	0	3312	8742	0	3543	9436	0	3697	11536	0	4123	13832	0	4471	15134	0	4612	17304	0	4889
(2.5+5)+(2.5+3.5)	16	5112	0	3093	8094	0	3177	9227	0	3312	9983	0	3403	12155	0	3808	14356	0	3858	15663	0	3963	18077	0	4159
	18	5041	0	3135	8023	0	3219	9139	0	3382	9883	0	3490	12027	0	3904	14285	0	4055	15606	0	4138	18006	0	4356
	20	4970	0	3177	7952	0	3260	9060	0	3436	9798	0	3553	11928	0	3971	14200	0	4180	15265	0	4326	17892	0	4556
	22	4899	0	3219	7881	0	3302	8946	0	3508	9656	0	3645	11800	0	4067	14115	0	4347	15435	0	4485	17807	0	4744
	24	4828	0	3260	7810	0	3344	8866	0	3577	9571	0	3733	11701	0	4163	14030	0	4514	15350	0	4657	17551	0	4937
(2.5+5)+(2.5+5)	16	5184	0	3123	8208	0	3207	9357	0	3344	10123	0	3435	12326	0	3844	14558	0	3895	15883	0	4001	18331	0	4199
	18	5112	0	3165	8136	0	3249	9268	0	3414	10022	0	3524	12197	0	3941	14486	0	4093	15826	0	4178	18259	0	4397
	20	5040	0	3207	8064	0	3292	9187	0	3469	9936	0	3587	12096	0	4009	14400	0	4220	15480	0	4368	18144	0	4600
	22	4968	0	3249	7992	0	3334	9072	0	3541	9792	0	3680	11966	0	4106	14314	0	4389	15653	0	4528	18058	0	4790
	24	4896	0	3292	7920	0	3376	8991	0	3611	9706	0	3768	11866	0	4203	14227	0	4558	15566	0	4701	17798	0	4984
(2.5+3.5)+(3.5+3.5)	16	5112	0	3093	8094	0	3177	9227	0	3312	9983	0	3403	12155	0	3808	14356	0	3858	15663	0	3963	18077	0	4159
	18	5041	0	3135	8023	0	3219	9139	0	3382	9883	0	3490	12027	0	3904	14285	0	4055	15606	0	4138	18006	0	4356
	20	4970	0	3177	7952	0	3260	9060	0	3436	9798	0	3553	11928	0	3971	14200	0	4180	15265	0	4326	17892	0	4556
	22	4899	0	3219	7881	0	3302	8946	0	3508	9656	0	3645	11800	0	4067	14115	0	4347	15435	0	4485	17807	0	4744
	24	4828	0	3260	7810	0	3344	8866	0	3577	9571	0	3733	11701	0	4163	14030	0	4514	15350	0	4657	17551	0	4937
(2.5+5)+(3.5+3.5)	16	5184	0	3123	8208	0	3207	9357	0	3344	10123	0	3435	12326	0	3844	14558	0	3895	15883	0	4001	18331	0	4199
	18	5112	0	3165	8136	0	3249	9268	0	3414	10022	0	3524	12197	0	3941	14486	0	4093	15826	0	4178	18259	0	4397
	20	5040	0	3207	8064	0	3292	9187	0	3469	9936	0	3587	12096	0	4009	14400	0	4220	15480	0	4368	18144	0	4600
	22	4968	0	3249	7992	0	3334	9072	0	3541	9792	0	3680	11966	0	4106	14314	0	4389	15653	0	4528	18058	0	4790
	24	4896	0	3292	7920	0	3376	8991	0	3611	9706	0	3768	11866	0	4203	14227	0	4558	15566	0	4701	17798	0	4984
(3.5+3.5)+(3.5+3.5)	16	5184	0	3123	8208	0	3207	9357	0	3344	10123	0	3435	12326	0	3844	14558	0	3895	15883	0	4001	18331	0	4199
	18	5112	0	3165	8136	0	3249	9268	0	3414	10022	0	3524	12197	0	3941	14486	0	4093	15826	0	4178	18259	0	4397
	20	5040	0	3207	8064	0	3292	9187	0	3469	9936	0	3587	12096	0	4009	14400	0	4220	15480	0	4368	18144	0	4600
	22	4968	0	3249	7992	0	3334	9072	0	3541	9792	0	3680	11966	0	4106	14314	0	4389	15653	0	4528	18058	0	4790
	24	4896	0	3292	7920	0	3376	8991	0	3611	9706	0	3768	11866	0	4203	14227	0	4558	15566	0	4701	17798	0	4984
(3.5+3.5)+(3.5+5)	16	5184	0	3123	8208	0	3207	9357	0	3344	10123	0	3435	12326	0	3844	14558	0	3895	15883	0	4001	18331	0	4199
	18	5112	0	3165	8136	0	3249	9268	0	3414	10022	0	3524	12197	0	3941	14486	0	4093	15826	0	4178	18259	0	4397
	20	5040	0	3207	8064	0	3292	9187	0	3469	9936	0	3587	12096	0	4009	14400	0	4220	15480	0	4368	18144	0	4600
	22	4968	0	3249	7992	0	3334	9072	0	3541	9792	0	3680	11966	0	4106	14314	0	4389	15653	0	4528	18058	0	4790
	24	4896	0	3292	7920	0	3376	8991	0	3611	9706	0	3768	11866	0	4203	14227	0	4558	15566	0	4701	17798	0	4984
(3.5+5)+(3.5+5)	16	5184	0	3123	8208	0	3207	9357	0	3344	10123	0	3435	12326	0	3844	14558	0	3895	15883	0	4001	18331	0	4199
	18	5112	0	3165	8136	0	3249	9268	0	3414	10022	0	3524	12197	0	3941	14486	0	4093	15826	0	4178	18259	0	4397
	20	5040	0	3207	8064	0	3292	9187	0	3469	9936	0	3587	12096	0	4009	14400	0	4220	15480	0	4368	18144	0	4600
	22	4968	0	3249	7992	0	3334	9072	0	3541	9792	0	3680	11966	0	4106	14314	0	4389	15653	0	4528	18058	0	4790
	24	4896	0	3292	7920	0	3376	8991	0	3611	9706	0	3768	11866	0	4203	14227	0	4558	15566	0	4701	17798	0	4984

EWB : Evaporator Wet Bulb temperature (°C)

EDB : Evaporator Dry Bulb temperature (°C)

(°CDB) : Outdoor Unit Inlet Air Dry Temperature (°C)

TC : Total Capacity (W)

SHC : Sensible Heating Capacity (W)

PI : Power Input

	INDOOR	OUTDOOR TEMPERATURE (°CDW)																							
	EDB	-15			-10			-7			-5			0			7			10			15		
	°C	TC	SHC	PI	TC	SHC	PI	TC	SHC	PI	TC	SHC	PI	TC	SHC	PI	TC	SHC	PI	TC	SHC	PI	TC	SHC	PI
(1.2+1.2)+(1.2+1.2+1.2)	16	3240	0	1820	5130	0	1870	5848	0	1949	6327	0	2002	7704	0	2241	9099	0	2271	9927	0	2332	11457	0	2448
	18	3195	0	1845	5085	0	1894	5792	0	1990	6264	0	2054	7623	0	2298	9054	0	2386	9891	0	2435	11412	0	2563
	20	3150	0	1870	5040	0	1919	5742	0	2022	6210	0	2091	7560	0	2337	9000	0	2460	9675	0	2546	11340	0	2681
	22	3105	0	1894	4995	0	1943	5670	0	2064	6120	0	2145	7479	0	2394	8946	0	2558	9783	0	2640	11286	0	2792
	24	3060	0	1919	4950	0	1968	5620	0	2105	6066	0	2197	7416	0	2450	8892	0	2657	9729	0	2740	11124	0	2905
(1.2+1.2)+(1.2+1.2+1.8)	16	3492	0	1894	5529	0	1946	6303	0	2029	6819	0	2084	8303	0	2332	9807	0	2363	10699	0	2427	12348	0	2547
	18	3444	0	1920	5481	0	1971	6243	0	2071	6751	0	2138	8216	0	2391	9758	0	2483	10660	0	2534	12300	0	2668
	20	3395	0	1946	5432	0	1997	6189	0	2104	6693	0	2176	8148	0	2432	9700	0	2560	10428	0	2650	12222	0	2790
	22	3347	0	1971	5384	0	2022	6111	0	2148	6596	0	2232	8061	0	2491	9642	0	2662	10544	0	2747	12164	0	2906
	24	3298	0	1997	5335	0	2048	6057	0	2191	6538	0	2286	7993	0	2550	9584	0	2765	10486	0	2852	11989	0	3023
(1.2+1.2)+(1.2+1.2+2.5)	16	3888	0	2131	6156	0	2189	7018	0	2282	7592	0	2344	9245	0	2624	10919	0	2658	11912	0	2730	13748	0	2866
	18	3834	0	2160	6102	0	2218	6951	0	2330	7517	0	2405	9148	0	2690	10865	0	2794	11869	0	2851	13694	0	3001
	20	3780	0	2189	6048	0	2246	6890	0	2367	7452	0	2448	9072	0	2736	10800	0	2880	11610	0	2981	13608	0	3139
	22	3726	0	2218	5994	0	2275	6804	0	2417	7344	0	2511	8975	0	2802	10735	0	2995	11740	0	3090	13543	0	3269
	24	3672	0	2246	5940	0	2304	6744	0	2465	7279	0	2572	8899	0	2868	10670	0	3110	11675	0	3208	13349	0	3401
(1.2+1.2)+(1.2+1.2+3.5)	16	3888	0	2131	6156	0	2189	7018	0	2282	7592	0	2344	9245	0	2624	10919	0	2658	11912	0	2730	13748	0	2866
	18	3834	0	2160	6102	0	2218	6951	0	2330	7517	0	2405	9148	0	2690	10865	0	2794	11869	0	2851	13694	0	3001
	20	3780	0	2189	6048	0	2246	6890	0	2367	7452	0	2448	9072	0	2736	10800	0	2880	11610	0	2981	13608	0	3139
	22	3726	0	2218	5994	0	2275	6804	0	2417	7344	0	2511	8975	0	2802	10735	0	2995	11740	0	3090	13543	0	3269
	24	3672	0	2246	5940	0	2304	6744	0	2465	7279	0	2572	8899	0	2868	10670	0	3110	11675	0	3208	13349	0	3401
(1.2+1.2)+(1.2+1.2+5)	16	3888	0	2131	6156	0	2189	7018	0	2282	7592	0	2344	9245	0	2624	10919	0	2658	11912	0	2730	13748	0	2866
	18	3834	0	2160	6102	0	2218	6951	0	2330	7517	0	2405	9148	0	2690	10865	0	2794	11869	0	2851	13694	0	3001
	20	3780	0	2189	6048	0	2246	6890	0	2367	7452	0	2448	9072	0	2736	10800	0	2880	11610	0	2981	13608	0	3139
	22	3726	0	2218	5994	0	2275	6804	0	2417	7344	0	2511	8975	0	2802	10735	0	2995	11740	0	3090	13543	0	3269
	24	3672	0	2246	5940	0	2304	6744	0	2465	7279	0	2572	8899	0	2868	10670	0	3110	11675	0	3208	13349	0	3401
(1.2+1.2)+(1.2+1.8+1.8)	16	3744	0	2020	5928	0	2075	6758	0	2163	7311	0	2222	8902	0	2487	10514	0	2520	11471	0	2588	13239	0	2716
	18	3692	0	2048	5876	0	2102	6693	0	2209	7238	0	2280	8809	0	2550	10462	0	2648	11430	0	2703	13187	0	2845
	20	3640	0	2075	5824	0	2129	6635	0	2244	7176	0	2321	8736	0	2594	10400	0	2730	11180	0	2826	13104	0	2976
	22	3588	0	2102	5772	0	2157	6552	0	2291	7072	0	2381	8642	0	2656	10338	0	2839	11305	0	2929	13042	0	3099
	24	3536	0	2129	5720	0	2184	6494	0	2336	7010	0	2438	8570	0	2719	10275	0	2948	11242	0	3041	12854	0	3224
(1.2+1.2)+(1.2+1.8+2.5)	16	3888	0	2131	6156	0	2189	7018	0	2282	7592	0	2344	9245	0	2624	10919	0	2658	11912	0	2730	13748	0	2866
	18	3834	0	2160	6102	0	2218	6951	0	2330	7517	0	2405	9148	0	2690	10865	0	2794	11869	0	2851	13694	0	3001
	20	3780	0	2189	6048	0	2246	6890	0	2367	7452	0	2448	9072	0	2736	10800	0	2880	11610	0	2981	13608	0	3139
	22	3726	0	2218	5994	0	2275	6804	0	2417	7344	0	2511	8975	0	2802	10735	0	2995	11740	0	3090	13543	0	3269
	24	3672	0	2246	5940	0	2304	6744	0	2465	7279	0	2572	8899	0	2868	10670	0	3110	11675	0	3208	13349	0	3401
(1.2+1.2)+(1.2+1.8+3.5)	16	3888	0	2131	6156	0	2189	7018	0	2282	7592	0	2344	9245	0	2624	10919	0	2658	11912	0	2730	13748	0	2866
	18	3834	0	2160	6102	0	2218	6951	0	2330	7517	0	2405	9148	0	2690	10865	0	2794	11869	0	2851	13694	0	3001
	20	3780	0	2189	6048	0	2246	6890	0	2367	7452	0	2448	9072	0	2736	10800	0	2880	11610	0	2981	13608	0	3139
	22	3726	0	2218	5994	0	2275	6804	0	2417	7344	0	2511	8975	0	2802	10735	0	2995	11740	0	3090	13543	0	3269
	24	3672	0	2246	5940	0	2304	6744	0	2465	7279	0	2572	8899	0	2868	10670	0	3110	11675	0	3208	13349	0	3401

EWB : Evaporator Wet Bulb temperature (°C)

EDB : Evaporator Dry Bulb temperature (°C)

(°CDB) : Outdoor Unit Inlet Air Dry Temperature (°C)

TC : Total Capacity (W)

SHC : Sensible Heating Capacity (W)

PI : Power Input

	INDOOR	OUTDOOR TEMPERATURE (°CDW)																							
	EDB	-15			-10			-7			-5			0			7			10			15		
	°C	TC	SHC	PI	TC	SHC	PI	TC	SHC	PI	TC	SHC	PI	TC	SHC	PI	TC	SHC	PI	TC	SHC	PI	TC	SHC	PI
(1.2+1.2)+(1.2+1.8+5)	16	3888	0	2131	6156	0	2189	7018	0	2282	7592	0	2344	9245	0	2624	10919	0	2658	11912	0	2730	13748	0	2866
	18	3834	0	2160	6102	0	2218	6951	0	2330	7517	0	2405	9148	0	2690	10865	0	2794	11869	0	2851	13694	0	3001
	20	3780	0	2189	6048	0	2246	6890	0	2367	7452	0	2448	9072	0	2736	10800	0	2880	11610	0	2981	13608	0	3139
	22	3726	0	2218	5994	0	2275	6804	0	2417	7344	0	2511	8975	0	2802	10735	0	2995	11740	0	3090	13543	0	3269
	24	3672	0	2246	5940	0	2304	6744	0	2465	7279	0	2572	8899	0	2868	10670	0	3110	11675	0	3208	13349	0	3401
(1.2+1.2)+(1.2+2.5+2.5)	16	3888	0	2131	6156	0	2189	7018	0	2282	7592	0	2344	9245	0	2624	10919	0	2658	11912	0	2730	13748	0	2866
	18	3834	0	2160	6102	0	2218	6951	0	2330	7517	0	2405	9148	0	2690	10865	0	2794	11869	0	2851	13694	0	3001
	20	3780	0	2189	6048	0	2246	6890	0	2367	7452	0	2448	9072	0	2736	10800	0	2880	11610	0	2981	13608	0	3139
	22	3726	0	2218	5994	0	2275	6804	0	2417	7344	0	2511	8975	0	2802	10735	0	2995	11740	0	3090	13543	0	3269
	24	3672	0	2246	5940	0	2304	6744	0	2465	7279	0	2572	8899	0	2868	10670	0	3110	11675	0	3208	13349	0	3401
(1.2+1.2)+(1.2+2.5+3.5)	16	3888	0	2131	6156	0	2189	7018	0	2282	7592	0	2344	9245	0	2624	10919	0	2658	11912	0	2730	13748	0	2866
	18	3834	0	2160	6102	0	2218	6951	0	2330	7517	0	2405	9148	0	2690	10865	0	2794	11869	0	2851	13694	0	3001
	20	3780	0	2189	6048	0	2246	6890	0	2367	7452	0	2448	9072	0	2736	10800	0	2880	11610	0	2981	13608	0	3139
	22	3726	0	2218	5994	0	2275	6804	0	2417	7344	0	2511	8975	0	2802	10735	0	2995	11740	0	3090	13543	0	3269
	24	3672	0	2246	5940	0	2304	6744	0	2465	7279	0	2572	8899	0	2868	10670	0	3110	11675	0	3208	13349	0	3401
(1.2+1.2)+(1.2+3.5+3.5)	16	3888	0	2131	6156	0	2189	7018	0	2282	7592	0	2344	9245	0	2624	10919	0	2658	11912	0	2730	13748	0	2866
	18	3834	0	2160	6102	0	2218	6951	0	2330	7517	0	2405	9148	0	2690	10865	0	2794	11869	0	2851	13694	0	3001
	20	3780	0	2189	6048	0	2246	6890	0	2367	7452	0	2448	9072	0	2736	10800	0	2880	11610	0	2981	13608	0	3139
	22	3726	0	2218	5994	0	2275	6804	0	2417	7344	0	2511	8975	0	2802	10735	0	2995	11740	0	3090	13543	0	3269
	24	3672	0	2246	5940	0	2304	6744	0	2465	7279	0	2572	8899	0	2868	10670	0	3110	11675	0	3208	13349	0	3401
(1.2+1.2)+(1.8+1.8+1.8)	16	3816	0	2094	6041	0	2151	6887	0	2242	7451	0	2304	9073	0	2578	10716	0	2612	11691	0	2683	13493	0	2816
	18	3763	0	2123	5988	0	2179	6822	0	2289	7377	0	2363	8977	0	2643	10663	0	2745	11648	0	2802	13440	0	2949
	20	3710	0	2151	5935	0	2207	6762	0	2326	7313	0	2406	8903	0	2689	10599	0	2830	11394	0	2929	13355	0	3085
	22	3657	0	2179	5882	0	2236	6677	0	2375	7207	0	2468	8808	0	2754	10535	0	2943	11521	0	3037	13291	0	3212
	24	3604	0	2207	5829	0	2264	6618	0	2422	7144	0	2527	8734	0	2819	10472	0	3056	11458	0	3153	13100	0	3342
(1.2+1.2)+(1.8+1.8+2.5)	16	3888	0	2131	6156	0	2189	7018	0	2282	7592	0	2344	9245	0	2624	10919	0	2658	11912	0	2730	13748	0	2866
	18	3834	0	2160	6102	0	2218	6951	0	2330	7517	0	2405	9148	0	2690	10865	0	2794	11869	0	2851	13694	0	3001
	20	3780	0	2189	6048	0	2246	6890	0	2367	7452	0	2448	9072	0	2736	10800	0	2880	11610	0	2981	13608	0	3139
	22	3726	0	2218	5994	0	2275	6804	0	2417	7344	0	2511	8975	0	2802	10735	0	2995	11740	0	3090	13543	0	3269
	24	3672	0	2246	5940	0	2304	6744	0	2465	7279	0	2572	8899	0	2868	10670	0	3110	11675	0	3208	13349	0	3401
(1.2+1.2)+(1.8+1.8+3.5)	16	3888	0	2131	6156	0	2189	7018	0	2282	7592	0	2344	9245	0	2624	10919	0	2658	11912	0	2730	13748	0	2866
	18	3834	0	2160	6102	0	2218	6951	0	2330	7517	0	2405	9148	0	2690	10865	0	2794	11869	0	2851	13694	0	3001
	20	3780	0	2189	6048	0	2246	6890	0	2367	7452	0	2448	9072	0	2736	10800	0	2880	11610	0	2981	13608	0	3139
	22	3726	0	2218	5994	0	2275	6804	0	2417	7344	0	2511	8975	0	2802	10735	0	2995	11740	0	3090	13543	0	3269
	24	3672	0	2246	5940	0	2304	6744	0	2465	7279	0	2572	8899	0	2868	10670	0	3110	11675	0	3208	13349	0	3401
(1.2+1.2)+(1.8+1.8+5)	16	3888	0	2131	6156	0	2189	7018	0	2282	7592	0	2344	9245	0	2624	10919	0	2658	11912	0	2730	13748	0	2866
	18	3834	0	2160	6102	0	2218	6951	0	2330	7517	0	2405	9148	0	2690	10865	0	2794	11869	0	2851	13694	0	3001
	20	3780	0	2189	6048	0	2246	6890	0	2367	7452	0	2448	9072	0	2736	10800	0	2880	11610	0	2981	13608	0	3139
	22	3726	0	2218	5994	0	2275	6804	0	2417	7344	0	2511	8975	0	2802	10735	0	2995	11740	0	3090	13543	0	3269
	24	3672	0	2246	5940	0	2304	6744	0	2465	7279	0	2572	8899	0	2868	10670	0	3110	11675	0	3208	13349	0	3401

EWB : Evaporator Wet Bulb temperature (°C)

EDB : Evaporator Dry Bulb temperature (°C)

(°CDB) : Outdoor Unit Inlet Air Dry Temperature (°C)

TC : Total Capacity (W)

SHC : Sensible Heating Capacity (W)

PI : Power Input

	INDOOR	OUTDOOR TEMPERATURE (°CDW)																							
	EDB	-15			-10			-7			-5			0			7			10			15		
	°C	TC	SHC	PI	TC	SHC	PI	TC	SHC	PI	TC	SHC	PI	TC	SHC	PI	TC	SHC	PI	TC	SHC	PI	TC	SHC	PI
(1.2+1.2)+(1.8 +2.5+2.5)	16	3888	0	2131	6156	0	2189	7018	0	2282	7592	0	2344	9245	0	2624	10919	0	2658	11912	0	2730	13748	0	2866
	18	3834	0	2160	6102	0	2218	6951	0	2330	7517	0	2405	9148	0	2690	10865	0	2794	11869	0	2851	13694	0	3001
	20	3780	0	2189	6048	0	2246	6890	0	2367	7452	0	2448	9072	0	2736	10800	0	2880	11610	0	2981	13608	0	3139
	22	3726	0	2218	5994	0	2275	6804	0	2417	7344	0	2511	8975	0	2802	10735	0	2995	11740	0	3090	13543	0	3269
	24	3672	0	2246	5940	0	2304	6744	0	2465	7279	0	2572	8899	0	2868	10670	0	3110	11675	0	3208	13349	0	3401
(1.2+1.2)+(1.8 +2.5+3.5)	16	3888	0	2131	6156	0	2189	7018	0	2282	7592	0	2344	9245	0	2624	10919	0	2658	11912	0	2730	13748	0	2866
	18	3834	0	2160	6102	0	2218	6951	0	2330	7517	0	2405	9148	0	2690	10865	0	2794	11869	0	2851	13694	0	3001
	20	3780	0	2189	6048	0	2246	6890	0	2367	7452	0	2448	9072	0	2736	10800	0	2880	11610	0	2981	13608	0	3139
	22	3726	0	2218	5994	0	2275	6804	0	2417	7344	0	2511	8975	0	2802	10735	0	2995	11740	0	3090	13543	0	3269
	24	3672	0	2246	5940	0	2304	6744	0	2465	7279	0	2572	8899	0	2868	10670	0	3110	11675	0	3208	13349	0	3401
(1.2+1.2)+(1.8 +3.5+3.5)	16	3888	0	2131	6156	0	2189	7018	0	2282	7592	0	2344	9245	0	2624	10919	0	2658	11912	0	2730	13748	0	2866
	18	3834	0	2160	6102	0	2218	6951	0	2330	7517	0	2405	9148	0	2690	10865	0	2794	11869	0	2851	13694	0	3001
	20	3780	0	2189	6048	0	2246	6890	0	2367	7452	0	2448	9072	0	2736	10800	0	2880	11610	0	2981	13608	0	3139
	22	3726	0	2218	5994	0	2275	6804	0	2417	7344	0	2511	8975	0	2802	10735	0	2995	11740	0	3090	13543	0	3269
	24	3672	0	2246	5940	0	2304	6744	0	2465	7279	0	2572	8899	0	2868	10670	0	3110	11675	0	3208	13349	0	3401
(1.2+1.2)+(2.5 +2.5+2.5)	16	3888	0	2131	6156	0	2189	7018	0	2282	7592	0	2344	9245	0	2624	10919	0	2658	11912	0	2730	13748	0	2866
	18	3834	0	2160	6102	0	2218	6951	0	2330	7517	0	2405	9148	0	2690	10865	0	2794	11869	0	2851	13694	0	3001
	20	3780	0	2189	6048	0	2246	6890	0	2367	7452	0	2448	9072	0	2736	10800	0	2880	11610	0	2981	13608	0	3139
	22	3726	0	2218	5994	0	2275	6804	0	2417	7344	0	2511	8975	0	2802	10735	0	2995	11740	0	3090	13543	0	3269
	24	3672	0	2246	5940	0	2304	6744	0	2465	7279	0	2572	8899	0	2868	10670	0	3110	11675	0	3208	13349	0	3401
(1.2+1.2)+(2.5 +2.5+3.5)	16	3888	0	2131	6156	0	2189	7018	0	2282	7592	0	2344	9245	0	2624	10919	0	2658	11912	0	2730	13748	0	2866
	18	3834	0	2160	6102	0	2218	6951	0	2330	7517	0	2405	9148	0	2690	10865	0	2794	11869	0	2851	13694	0	3001
	20	3780	0	2189	6048	0	2246	6890	0	2367	7452	0	2448	9072	0	2736	10800	0	2880	11610	0	2981	13608	0	3139
	22	3726	0	2218	5994	0	2275	6804	0	2417	7344	0	2511	8975	0	2802	10735	0	2995	11740	0	3090	13543	0	3269
	24	3672	0	2246	5940	0	2304	6744	0	2465	7279	0	2572	8899	0	2868	10670	0	3110	11675	0	3208	13349	0	3401
(1.2+1.8)+(1.2 +1.2+1.2)	16	3492	0	1968	5529	0	2022	6303	0	2108	6819	0	2165	8303	0	2423	9807	0	2455	10699	0	2522	12348	0	2647
	18	3444	0	1995	5481	0	2048	6243	0	2152	6751	0	2221	8216	0	2484	9758	0	2580	10660	0	2633	12300	0	2772
	20	3395	0	2022	5432	0	2075	6189	0	2187	6693	0	2261	8148	0	2527	9700	0	2660	10428	0	2753	12222	0	2899
	22	3347	0	2048	5384	0	2101	6111	0	2232	6596	0	2320	8061	0	2588	9642	0	2766	10544	0	2854	12164	0	3019
	24	3298	0	2075	5335	0	2128	6057	0	2276	6538	0	2375	7993	0	2649	9584	0	2873	10486	0	2963	11989	0	3141
(1.2+1.8)+(1.2 +1.2+1.8)	16	3744	0	2042	5928	0	2098	6758	0	2187	7311	0	2247	8902	0	2514	10514	0	2547	11471	0	2616	13239	0	2746
	18	3692	0	2070	5876	0	2125	6693	0	2233	7238	0	2305	8809	0	2578	10462	0	2677	11430	0	2732	13187	0	2876
	20	3640	0	2098	5824	0	2153	6635	0	2269	7176	0	2346	8736	0	2622	10400	0	2760	11180	0	2857	13104	0	3008
	22	3588	0	2125	5772	0	2180	6552	0	2316	7072	0	2407	8642	0	2685	10338	0	2870	11305	0	2961	13042	0	3133
	24	3536	0	2153	5720	0	2208	6494	0	2362	7010	0	2465	8570	0	2749	10275	0	2981	11242	0	3075	12854	0	3260
(1.2+1.8)+(1.2 +1.2+2.5)	16	4140	0	2279	6555	0	2341	7473	0	2441	8085	0	2507	9844	0	2806	11627	0	2843	12685	0	2920	14640	0	3065
	18	4083	0	2310	6498	0	2372	7401	0	2492	8004	0	2572	9741	0	2877	11569	0	2988	12639	0	3049	14582	0	3209
	20	4025	0	2341	6440	0	2402	7337	0	2532	7935	0	2618	9660	0	2926	11500	0	3080	12363	0	3188	14490	0	3357
	22	3968	0	2372	6383	0	2433	7245	0	2585	7820	0	2686	9557	0	2997	11431	0	3203	12501	0	3305	14421	0	3496
	24	3910	0	2402	6325	0	2464	7181	0	2636	7751	0	2750	9476	0	3068	11362	0	3326	12432	0	3431	14214	0	3637

EWB : Evaporator Wet Bulb temperature (°C)

EDB : Evaporator Dry Bulb temperature (°C)

(°CDB) : Outdoor Unit Inlet Air Dry Temperature (°C)

TC : Total Capacity (W)

SHC : Sensible Heating Capacity (W)

PI : Power Input

	INDOOR	OUTDOOR TEMPERATURE (°CDW)																							
	EDB	-15			-10			-7			-5			0			7			10			15		
	°C	TC	SHC	PI	TC	SHC	PI	TC	SHC	PI	TC	SHC	PI	TC	SHC	PI	TC	SHC	PI	TC	SHC	PI	TC	SHC	PI
(1.2+1.8)+(1.2+1.2+3.5)	16	4140	0	2279	6555	0	2341	7473	0	2441	8085	0	2507	9844	0	2806	11627	0	2843	12685	0	2920	14640	0	3065
	18	4083	0	2310	6498	0	2372	7401	0	2492	8004	0	2572	9741	0	2877	11569	0	2988	12639	0	3049	14582	0	3209
	20	4025	0	2341	6440	0	2402	7337	0	2532	7935	0	2618	9660	0	2926	11500	0	3080	12363	0	3188	14490	0	3357
	22	3968	0	2372	6383	0	2433	7245	0	2585	7820	0	2686	9557	0	2997	11431	0	3203	12501	0	3305	14421	0	3496
	24	3910	0	2402	6325	0	2464	7181	0	2636	7751	0	2750	9476	0	3068	11362	0	3326	12432	0	3431	14214	0	3637
(1.2+1.8)+(1.2+1.2+5)	16	4140	0	2279	6555	0	2341	7473	0	2441	8085	0	2507	9844	0	2806	11627	0	2843	12685	0	2920	14640	0	3065
	18	4083	0	2310	6498	0	2372	7401	0	2492	8004	0	2572	9741	0	2877	11569	0	2988	12639	0	3049	14582	0	3209
	20	4025	0	2341	6440	0	2402	7337	0	2532	7935	0	2618	9660	0	2926	11500	0	3080	12363	0	3188	14490	0	3357
	22	3968	0	2372	6383	0	2433	7245	0	2585	7820	0	2686	9557	0	2997	11431	0	3203	12501	0	3305	14421	0	3496
	24	3910	0	2402	6325	0	2464	7181	0	2636	7751	0	2750	9476	0	3068	11362	0	3326	12432	0	3431	14214	0	3637
(1.2+1.8)+(1.2+1.8+1.8)	16	3996	0	2168	6327	0	2227	7213	0	2322	7803	0	2385	9502	0	2669	11222	0	2704	12243	0	2778	14130	0	2915
	18	3941	0	2198	6272	0	2256	7144	0	2370	7726	0	2447	9402	0	2737	11167	0	2842	12199	0	2901	14075	0	3053
	20	3885	0	2227	6216	0	2285	7082	0	2408	7659	0	2491	9324	0	2784	11100	0	2930	11933	0	3033	13986	0	3194
	22	3830	0	2256	6161	0	2315	6993	0	2459	7548	0	2555	9224	0	2851	11033	0	3047	12066	0	3144	13919	0	3326
	24	3774	0	2285	6105	0	2344	6931	0	2507	7481	0	2616	9146	0	2918	10967	0	3164	11999	0	3264	13720	0	3460
(1.2+1.8)+(1.2+1.8+2.5)	16	4140	0	2279	6555	0	2341	7473	0	2441	8085	0	2507	9844	0	2806	11627	0	2843	12685	0	2920	14640	0	3065
	18	4083	0	2310	6498	0	2372	7401	0	2492	8004	0	2572	9741	0	2877	11569	0	2988	12639	0	3049	14582	0	3209
	20	4025	0	2341	6440	0	2402	7337	0	2532	7935	0	2618	9660	0	2926	11500	0	3080	12363	0	3188	14490	0	3357
	22	3968	0	2372	6383	0	2433	7245	0	2585	7820	0	2686	9557	0	2997	11431	0	3203	12501	0	3305	14421	0	3496
	24	3910	0	2402	6325	0	2464	7181	0	2636	7751	0	2750	9476	0	3068	11362	0	3326	12432	0	3431	14214	0	3637
(1.2+1.8)+(1.2+1.8+3.5)	16	4140	0	2279	6555	0	2341	7473	0	2441	8085	0	2507	9844	0	2806	11627	0	2843	12685	0	2920	14640	0	3065
	18	4083	0	2310	6498	0	2372	7401	0	2492	8004	0	2572	9741	0	2877	11569	0	2988	12639	0	3049	14582	0	3209
	20	4025	0	2341	6440	0	2402	7337	0	2532	7935	0	2618	9660	0	2926	11500	0	3080	12363	0	3188	14490	0	3357
	22	3968	0	2372	6383	0	2433	7245	0	2585	7820	0	2686	9557	0	2997	11431	0	3203	12501	0	3305	14421	0	3496
	24	3910	0	2402	6325	0	2464	7181	0	2636	7751	0	2750	9476	0	3068	11362	0	3326	12432	0	3431	14214	0	3637
(1.2+1.8)+(1.2+1.8+5)	16	4140	0	2279	6555	0	2341	7473	0	2441	8085	0	2507	9844	0	2806	11627	0	2843	12685	0	2920	14640	0	3065
	18	4083	0	2310	6498	0	2372	7401	0	2492	8004	0	2572	9741	0	2877	11569	0	2988	12639	0	3049	14582	0	3209
	20	4025	0	2341	6440	0	2402	7337	0	2532	7935	0	2618	9660	0	2926	11500	0	3080	12363	0	3188	14490	0	3357
	22	3968	0	2372	6383	0	2433	7245	0	2585	7820	0	2686	9557	0	2997	11431	0	3203	12501	0	3305	14421	0	3496
	24	3910	0	2402	6325	0	2464	7181	0	2636	7751	0	2750	9476	0	3068	11362	0	3326	12432	0	3431	14214	0	3637
(1.2+1.8)+(1.2+2.5+2.5)	16	4140	0	2279	6555	0	2341	7473	0	2441	8085	0	2507	9844	0	2806	11627	0	2843	12685	0	2920	14640	0	3065
	18	4083	0	2310	6498	0	2372	7401	0	2492	8004	0	2572	9741	0	2877	11569	0	2988	12639	0	3049	14582	0	3209
	20	4025	0	2341	6440	0	2402	7337	0	2532	7935	0	2618	9660	0	2926	11500	0	3080	12363	0	3188	14490	0	3357
	22	3968	0	2372	6383	0	2433	7245	0	2585	7820	0	2686	9557	0	2997	11431	0	3203	12501	0	3305	14421	0	3496
	24	3910	0	2402	6325	0	2464	7181	0	2636	7751	0	2750	9476	0	3068	11362	0	3326	12432	0	3431	14214	0	3637
(1.2+1.8)+(1.2+2.5+3.5)	16	4140	0	2279	6555	0	2341	7473	0	2441	8085	0	2507	9844	0	2806	11627	0	2843	12685	0	2920	14640	0	3065
	18	4083	0	2310	6498	0	2372	7401	0	2492	8004	0	2572	9741	0	2877	11569	0	2988	12639	0	3049	14582	0	3209
	20	4025	0	2341	6440	0	2402	7337	0	2532	7935	0	2618	9660	0	2926	11500	0	3080	12363	0	3188	14490	0	3357
	22	3968	0	2372	6383	0	2433	7245	0	2585	7820	0	2686	9557	0	2997	11431	0	3203	12501	0	3305	14421	0	3496
	24	3910	0	2402	6325	0	2464	7181	0	2636	7751	0	2750	9476	0	3068	11362	0	3326	12432	0	3431	14214	0	3637

EWB : Evaporator Wet Bulb temperature (°C)

EDB : Evaporator Dry Bulb temperature (°C)

(°CDB) : Outdoor Unit Inlet Air Dry Temperature (°C)

TC : Total Capacity (W)

SHC : Sensible Heating Capacity (W)

PI : Power Input

	INDOOR	OUTDOOR TEMPERATURE (°CDW)																							
	EDB	-15			-10			-7			-5			0			7			10			15		
	°C	TC	SHC	PI	TC	SHC	PI	TC	SHC	PI	TC	SHC	PI	TC	SHC	PI	TC	SHC	PI	TC	SHC	PI	TC	SHC	PI
(1.2+1.8)+(1.2+3.5+3.5)	16	4140	0	2279	6555	0	2341	7473	0	2441	8085	0	2507	9844	0	2806	11627	0	2843	12685	0	2920	14640	0	3065
	18	4083	0	2310	6498	0	2372	7401	0	2492	8004	0	2572	9741	0	2877	11569	0	2988	12639	0	3049	14582	0	3209
	20	4025	0	2341	6440	0	2402	7337	0	2532	7935	0	2618	9660	0	2926	11500	0	3080	12363	0	3188	14490	0	3357
	22	3968	0	2372	6383	0	2433	7245	0	2585	7820	0	2686	9557	0	2997	11431	0	3203	12501	0	3305	14421	0	3496
	24	3910	0	2402	6325	0	2464	7181	0	2636	7751	0	2750	9476	0	3068	11362	0	3326	12432	0	3431	14214	0	3637
(1.2+1.8)+(1.8+1.8+1.8)	16	4068	0	2242	6440	0	2303	7342	0	2401	7943	0	2466	9672	0	2760	11423	0	2797	12463	0	2872	14384	0	3015
	18	4011	0	2273	6384	0	2333	7272	0	2451	7864	0	2530	9570	0	2830	11367	0	2939	12418	0	3000	14327	0	3157
	20	3955	0	2303	6327	0	2363	7209	0	2491	7796	0	2576	9491	0	2879	11299	0	3030	12146	0	3136	14237	0	3303
	22	3898	0	2333	6271	0	2394	7118	0	2543	7683	0	2642	9389	0	2948	11231	0	3151	12282	0	3251	14169	0	3439
	24	3842	0	2363	6214	0	2424	7055	0	2593	7616	0	2706	9310	0	3018	11163	0	3272	12214	0	3375	13966	0	3578
(1.2+1.8)+(1.8+1.8+2.5)	16	4140	0	2279	6555	0	2341	7473	0	2441	8085	0	2507	9844	0	2806	11627	0	2843	12685	0	2920	14640	0	3065
	18	4083	0	2310	6498	0	2372	7401	0	2492	8004	0	2572	9741	0	2877	11569	0	2988	12639	0	3049	14582	0	3209
	20	4025	0	2341	6440	0	2402	7337	0	2532	7935	0	2618	9660	0	2926	11500	0	3080	12363	0	3188	14490	0	3357
	22	3968	0	2372	6383	0	2433	7245	0	2585	7820	0	2686	9557	0	2997	11431	0	3203	12501	0	3305	14421	0	3496
	24	3910	0	2402	6325	0	2464	7181	0	2636	7751	0	2750	9476	0	3068	11362	0	3326	12432	0	3431	14214	0	3637
(1.2+1.8)+(1.8+1.8+3.5)	16	4140	0	2279	6555	0	2341	7473	0	2441	8085	0	2507	9844	0	2806	11627	0	2843	12685	0	2920	14640	0	3065
	18	4083	0	2310	6498	0	2372	7401	0	2492	8004	0	2572	9741	0	2877	11569	0	2988	12639	0	3049	14582	0	3209
	20	4025	0	2341	6440	0	2402	7337	0	2532	7935	0	2618	9660	0	2926	11500	0	3080	12363	0	3188	14490	0	3357
	22	3968	0	2372	6383	0	2433	7245	0	2585	7820	0	2686	9557	0	2997	11431	0	3203	12501	0	3305	14421	0	3496
	24	3910	0	2402	6325	0	2464	7181	0	2636	7751	0	2750	9476	0	3068	11362	0	3326	12432	0	3431	14214	0	3637
(1.2+1.8)+(1.8+1.8+5)	16	4140	0	2279	6555	0	2341	7473	0	2441	8085	0	2507	9844	0	2806	11627	0	2843	12685	0	2920	14640	0	3065
	18	4083	0	2310	6498	0	2372	7401	0	2492	8004	0	2572	9741	0	2877	11569	0	2988	12639	0	3049	14582	0	3209
	20	4025	0	2341	6440	0	2402	7337	0	2532	7935	0	2618	9660	0	2926	11500	0	3080	12363	0	3188	14490	0	3357
	22	3968	0	2372	6383	0	2433	7245	0	2585	7820	0	2686	9557	0	2997	11431	0	3203	12501	0	3305	14421	0	3496
	24	3910	0	2402	6325	0	2464	7181	0	2636	7751	0	2750	9476	0	3068	11362	0	3326	12432	0	3431	14214	0	3637
(1.2+1.8)+(1.8+2.5+2.5)	16	4140	0	2279	6555	0	2341	7473	0	2441	8085	0	2507	9844	0	2806	11627	0	2843	12685	0	2920	14640	0	3065
	18	4083	0	2310	6498	0	2372	7401	0	2492	8004	0	2572	9741	0	2877	11569	0	2988	12639	0	3049	14582	0	3209
	20	4025	0	2341	6440	0	2402	7337	0	2532	7935	0	2618	9660	0	2926	11500	0	3080	12363	0	3188	14490	0	3357
	22	3968	0	2372	6383	0	2433	7245	0	2585	7820	0	2686	9557	0	2997	11431	0	3203	12501	0	3305	14421	0	3496
	24	3910	0	2402	6325	0	2464	7181	0	2636	7751	0	2750	9476	0	3068	11362	0	3326	12432	0	3431	14214	0	3637
(1.2+1.8)+(1.8+2.5+3.5)	16	4140	0	2279	6555	0	2341	7473	0	2441	8085	0	2507	9844	0	2806	11627	0	2843	12685	0	2920	14640	0	3065
	18	4083	0	2310	6498	0	2372	7401	0	2492	8004	0	2572	9741	0	2877	11569	0	2988	12639	0	3049	14582	0	3209
	20	4025	0	2341	6440	0	2402	7337	0	2532	7935	0	2618	9660	0	2926	11500	0	3080	12363	0	3188	14490	0	3357
	22	3968	0	2372	6383	0	2433	7245	0	2585	7820	0	2686	9557	0	2997	11431	0	3203	12501	0	3305	14421	0	3496
	24	3910	0	2402	6325	0	2464	7181	0	2636	7751	0	2750	9476	0	3068	11362	0	3326	12432	0	3431	14214	0	3637
(1.2+1.8)+(1.8+3.5+3.5)	16	4140	0	2279	6555	0	2341	7473	0	2441	8085	0	2507	9844	0	2806	11627	0	2843	12685	0	2920	14640	0	3065
	18	4083	0	2310	6498	0	2372	7401	0	2492	8004	0	2572	9741	0	2877	11569	0	2988	12639	0	3049	14582	0	3209
	20	4025	0	2341	6440	0	2402	7337	0	2532	7935	0	2618	9660	0	2926	11500	0	3080	12363	0	3188	14490	0	3357
	22	3968	0	2372	6383	0	2433	7245	0	2585	7820	0	2686	9557	0	2997	11431	0	3203	12501	0	3305	14421	0	3496
	24	3910	0	2402	6325	0	2464	7181	0	2636	7751	0	2750	9476	0	3068	11362	0	3326	12432	0	3431	14214	0	3637

EWB : Evaporator Wet Bulb temperature (°C)

EDB : Evaporator Dry Bulb temperature (°C)

(°CDB) : Outdoor Unit Inlet Air Dry Temperature (°C)

TC : Total Capacity (W)

SHC : Sensible Heating Capacity (W)

PI : Power Input

	INDOOR	OUTDOOR TEMPERATURE (°CDW)																							
	EDB	-15			-10			-7			-5			0			7			10			15		
	°C	TC	SHC	PI	TC	SHC	PI	TC	SHC	PI	TC	SHC	PI	TC	SHC	PI	TC	SHC	PI	TC	SHC	PI	TC	SHC	PI
(1.2+1.8)+(2.5 +2.5+2.5)	16	4140	0	2279	6555	0	2341	7473	0	2441	8085	0	2507	9844	0	2806	11627	0	2843	12685	0	2920	14640	0	3065
	18	4083	0	2310	6498	0	2372	7401	0	2492	8004	0	2572	9741	0	2877	11569	0	2988	12639	0	3049	14582	0	3209
	20	4025	0	2341	6440	0	2402	7337	0	2532	7935	0	2618	9660	0	2926	11500	0	3080	12363	0	3188	14490	0	3357
	22	3968	0	2372	6383	0	2433	7245	0	2585	7820	0	2686	9557	0	2997	11431	0	3203	12501	0	3305	14421	0	3496
	24	3910	0	2402	6325	0	2464	7181	0	2636	7751	0	2750	9476	0	3068	11362	0	3326	12432	0	3431	14214	0	3637
(1.2+1.8)+(2.5 +2.5+3.5)	16	4140	0	2279	6555	0	2341	7473	0	2441	8085	0	2507	9844	0	2806	11627	0	2843	12685	0	2920	14640	0	3065
	18	4083	0	2310	6498	0	2372	7401	0	2492	8004	0	2572	9741	0	2877	11569	0	2988	12639	0	3049	14582	0	3209
	20	4025	0	2341	6440	0	2402	7337	0	2532	7935	0	2618	9660	0	2926	11500	0	3080	12363	0	3188	14490	0	3357
	22	3968	0	2372	6383	0	2433	7245	0	2585	7820	0	2686	9557	0	2997	11431	0	3203	12501	0	3305	14421	0	3496
	24	3910	0	2402	6325	0	2464	7181	0	2636	7751	0	2750	9476	0	3068	11362	0	3326	12432	0	3431	14214	0	3637
(1.2+2.5)+(1.2 +1.2+1.2)	16	3996	0	2242	6327	0	2303	7213	0	2401	7803	0	2466	9502	0	2760	11222	0	2797	12243	0	2872	14130	0	3015
	18	3941	0	2273	6272	0	2333	7144	0	2451	7726	0	2530	9402	0	2830	11167	0	2939	12199	0	3000	14075	0	3157
	20	3885	0	2303	6216	0	2363	7082	0	2491	7659	0	2576	9324	0	2879	11100	0	3030	11933	0	3136	13986	0	3303
	22	3830	0	2333	6161	0	2394	6993	0	2543	7548	0	2642	9224	0	2948	11033	0	3151	12066	0	3251	13919	0	3439
	24	3774	0	2363	6105	0	2424	6931	0	2593	7481	0	2706	9146	0	3018	10967	0	3272	11999	0	3375	13720	0	3578
(1.2+2.5)+(1.2 +1.2+1.8)	16	4248	0	2316	6726	0	2379	7668	0	2480	8295	0	2548	10101	0	2851	11930	0	2889	13015	0	2967	15021	0	3114
	18	4189	0	2348	6667	0	2410	7594	0	2532	8213	0	2614	9995	0	2923	11871	0	3036	12968	0	3099	14962	0	3261
	20	4130	0	2379	6608	0	2441	7528	0	2573	8142	0	2661	9912	0	2974	11800	0	3130	12685	0	3240	14868	0	3412
	22	4071	0	2410	6549	0	2473	7434	0	2627	8024	0	2729	9806	0	3045	11729	0	3255	12827	0	3358	14797	0	3553
	24	4012	0	2441	6490	0	2504	7368	0	2679	7953	0	2795	9723	0	3117	11658	0	3380	12756	0	3487	14585	0	3697
(1.2+2.5)+(1.2 +1.2+2.5)	16	4644	0	2553	7353	0	2622	8382	0	2734	9069	0	2808	11042	0	3143	13042	0	3184	14229	0	3271	16422	0	3433
	18	4580	0	2588	7289	0	2657	8302	0	2791	8978	0	2881	10926	0	3222	12977	0	3347	14177	0	3416	16357	0	3595
	20	4515	0	2622	7224	0	2691	8230	0	2836	8901	0	2933	10836	0	3278	12900	0	3450	13868	0	3571	16254	0	3761
	22	4451	0	2657	7160	0	2726	8127	0	2895	8772	0	3008	10720	0	3357	12823	0	3588	14022	0	3702	16177	0	3916
	24	4386	0	2691	7095	0	2760	8055	0	2953	8695	0	3081	10630	0	3436	12745	0	3726	13945	0	3843	15944	0	4074
(1.2+2.5)+(1.2 +1.2+3.5)	16	4644	0	2553	7353	0	2622	8382	0	2734	9069	0	2808	11042	0	3143	13042	0	3184	14229	0	3271	16422	0	3433
	18	4580	0	2588	7289	0	2657	8302	0	2791	8978	0	2881	10926	0	3222	12977	0	3347	14177	0	3416	16357	0	3595
	20	4515	0	2622	7224	0	2691	8230	0	2836	8901	0	2933	10836	0	3278	12900	0	3450	13868	0	3571	16254	0	3761
	22	4451	0	2657	7160	0	2726	8127	0	2895	8772	0	3008	10720	0	3357	12823	0	3588	14022	0	3702	16177	0	3916
	24	4386	0	2691	7095	0	2760	8055	0	2953	8695	0	3081	10630	0	3436	12745	0	3726	13945	0	3843	15944	0	4074
(1.2+2.5)+(1.2 +1.2+5)	16	4644	0	2553	7353	0	2622	8382	0	2734	9069	0	2808	11042	0	3143	13042	0	3184	14229	0	3271	16422	0	3433
	18	4580	0	2588	7289	0	2657	8302	0	2791	8978	0	2881	10926	0	3222	12977	0	3347	14177	0	3416	16357	0	3595
	20	4515	0	2622	7224	0	2691	8230	0	2836	8901	0	2933	10836	0	3278	12900	0	3450	13868	0	3571	16254	0	3761
	22	4451	0	2657	7160	0	2726	8127	0	2895	8772	0	3008	10720	0	3357	12823	0	3588	14022	0	3702	16177	0	3916
	24	4386	0	2691	7095	0	2760	8055	0	2953	8695	0	3081	10630	0	3436	12745	0	3726	13945	0	3843	15944	0	4074
(1.2+2.5)+(1.2 +1.8+1.8)	16	4500	0	2442	7125	0	2508	8123	0	2615	8788	0	2686	10700	0	3006	12638	0	3046	13788	0	3128	15913	0	3284
	18	4438	0	2475	7063	0	2541	8045	0	2670	8700	0	2756	10588	0	3082	12575	0	3201	13738	0	3267	15850	0	3439
	20	4375	0	2508	7000	0	2574	7975	0	2713	8625	0	2805	10500	0	3135	12500	0	3300	13438	0	3416	15750	0	3597
	22	4313	0	2541	6938	0	2607	7875	0	2769	8500	0	2878	10388	0	3211	12425	0	3432	13588	0	3541	15675	0	3746
	24	4250	0	2574	6875	0	2640	7805	0	2824	8425	0	2947	10300	0	3287	12350	0	3564	13513	0	3676	15450	0	3897

EWB : Evaporator Wet Bulb temperature (°C)

EDB : Evaporator Dry Bulb temperature (°C)

(°CDB) : Outdoor Unit Inlet Air Dry Temperature (°C)

TC : Total Capacity (W)

SHC : Sensible Heating Capacity (W)

PI : Power Input

	INDOOR	OUTDOOR TEMPERATURE (°CDW)																							
	EDB	-15			-10			-7			-5			0			7			10			15		
	°C	TC	SHC	PI	TC	SHC	PI	TC	SHC	PI	TC	SHC	PI	TC	SHC	PI	TC	SHC	PI	TC	SHC	PI	TC	SHC	PI
(1.2+2.5)+(1.2+1.8+2.5)	16	4644	0	2553	7353	0	2622	8382	0	2734	9069	0	2808	11042	0	3143	13042	0	3184	14229	0	3271	16422	0	3433
	18	4580	0	2588	7289	0	2657	8302	0	2791	8978	0	2881	10926	0	3222	12977	0	3347	14177	0	3416	16357	0	3595
	20	4515	0	2622	7224	0	2691	8230	0	2836	8901	0	2933	10836	0	3278	12900	0	3450	13868	0	3571	16254	0	3761
	22	4451	0	2657	7160	0	2726	8127	0	2895	8772	0	3008	10720	0	3357	12823	0	3588	14022	0	3702	16177	0	3916
	24	4386	0	2691	7095	0	2760	8055	0	2953	8695	0	3081	10630	0	3436	12745	0	3726	13945	0	3843	15944	0	4074
(1.2+2.5)+(1.2+1.8+3.5)	16	4644	0	2553	7353	0	2622	8382	0	2734	9069	0	2808	11042	0	3143	13042	0	3184	14229	0	3271	16422	0	3433
	18	4580	0	2588	7289	0	2657	8302	0	2791	8978	0	2881	10926	0	3222	12977	0	3347	14177	0	3416	16357	0	3595
	20	4515	0	2622	7224	0	2691	8230	0	2836	8901	0	2933	10836	0	3278	12900	0	3450	13868	0	3571	16254	0	3761
	22	4451	0	2657	7160	0	2726	8127	0	2895	8772	0	3008	10720	0	3357	12823	0	3588	14022	0	3702	16177	0	3916
	24	4386	0	2691	7095	0	2760	8055	0	2953	8695	0	3081	10630	0	3436	12745	0	3726	13945	0	3843	15944	0	4074
(1.2+2.5)+(1.2+1.8+5)	16	4644	0	2553	7353	0	2622	8382	0	2734	9069	0	2808	11042	0	3143	13042	0	3184	14229	0	3271	16422	0	3433
	18	4580	0	2588	7289	0	2657	8302	0	2791	8978	0	2881	10926	0	3222	12977	0	3347	14177	0	3416	16357	0	3595
	20	4515	0	2622	7224	0	2691	8230	0	2836	8901	0	2933	10836	0	3278	12900	0	3450	13868	0	3571	16254	0	3761
	22	4451	0	2657	7160	0	2726	8127	0	2895	8772	0	3008	10720	0	3357	12823	0	3588	14022	0	3702	16177	0	3916
	24	4386	0	2691	7095	0	2760	8055	0	2953	8695	0	3081	10630	0	3436	12745	0	3726	13945	0	3843	15944	0	4074
(1.2+2.5)+(1.2+2.5+2.5)	16	4644	0	2553	7353	0	2622	8382	0	2734	9069	0	2808	11042	0	3143	13042	0	3184	14229	0	3271	16422	0	3433
	18	4580	0	2588	7289	0	2657	8302	0	2791	8978	0	2881	10926	0	3222	12977	0	3347	14177	0	3416	16357	0	3595
	20	4515	0	2622	7224	0	2691	8230	0	2836	8901	0	2933	10836	0	3278	12900	0	3450	13868	0	3571	16254	0	3761
	22	4451	0	2657	7160	0	2726	8127	0	2895	8772	0	3008	10720	0	3357	12823	0	3588	14022	0	3702	16177	0	3916
	24	4386	0	2691	7095	0	2760	8055	0	2953	8695	0	3081	10630	0	3436	12745	0	3726	13945	0	3843	15944	0	4074
(1.2+2.5)+(1.2+2.5+3.5)	16	4644	0	2553	7353	0	2622	8382	0	2734	9069	0	2808	11042	0	3143	13042	0	3184	14229	0	3271	16422	0	3433
	18	4580	0	2588	7289	0	2657	8302	0	2791	8978	0	2881	10926	0	3222	12977	0	3347	14177	0	3416	16357	0	3595
	20	4515	0	2622	7224	0	2691	8230	0	2836	8901	0	2933	10836	0	3278	12900	0	3450	13868	0	3571	16254	0	3761
	22	4451	0	2657	7160	0	2726	8127	0	2895	8772	0	3008	10720	0	3357	12823	0	3588	14022	0	3702	16177	0	3916
	24	4386	0	2691	7095	0	2760	8055	0	2953	8695	0	3081	10630	0	3436	12745	0	3726	13945	0	3843	15944	0	4074
(1.2+2.5)+(1.2+3.5+3.5)	16	4644	0	2553	7353	0	2622	8382	0	2734	9069	0	2808	11042	0	3143	13042	0	3184	14229	0	3271	16422	0	3433
	18	4580	0	2588	7289	0	2657	8302	0	2791	8978	0	2881	10926	0	3222	12977	0	3347	14177	0	3416	16357	0	3595
	20	4515	0	2622	7224	0	2691	8230	0	2836	8901	0	2933	10836	0	3278	12900	0	3450	13868	0	3571	16254	0	3761
	22	4451	0	2657	7160	0	2726	8127	0	2895	8772	0	3008	10720	0	3357	12823	0	3588	14022	0	3702	16177	0	3916
	24	4386	0	2691	7095	0	2760	8055	0	2953	8695	0	3081	10630	0	3436	12745	0	3726	13945	0	3843	15944	0	4074
(1.2+2.5)+(1.8+1.8+1.8)	16	4572	0	2516	7238	0	2584	8252	0	2694	8927	0	2768	10870	0	3097	12839	0	3138	14007	0	3223	16166	0	3383
	18	4508	0	2550	7175	0	2618	8173	0	2751	8839	0	2839	10756	0	3176	12775	0	3298	13956	0	3366	16102	0	3543
	20	4445	0	2584	7111	0	2652	8102	0	2795	8762	0	2890	10667	0	3230	12699	0	3400	13651	0	3519	16001	0	3706
	22	4381	0	2618	7048	0	2686	8000	0	2853	8635	0	2965	10553	0	3308	12623	0	3536	13804	0	3648	15925	0	3859
	24	4318	0	2652	6984	0	2720	7929	0	2910	8559	0	3036	10464	0	3386	12547	0	3672	13728	0	3788	15696	0	4015
(1.2+2.5)+(1.8+1.8+2.5)	16	4644	0	2553	7353	0	2622	8382	0	2734	9069	0	2808	11042	0	3143	13042	0	3184	14229	0	3271	16422	0	3433
	18	4580	0	2588	7289	0	2657	8302	0	2791	8978	0	2881	10926	0	3222	12977	0	3347	14177	0	3416	16357	0	3595
	20	4515	0	2622	7224	0	2691	8230	0	2836	8901	0	2933	10836	0	3278	12900	0	3450	13868	0	3571	16254	0	3761
	22	4451	0	2657	7160	0	2726	8127	0	2895	8772	0	3008	10720	0	3357	12823	0	3588	14022	0	3702	16177	0	3916
	24	4386	0	2691	7095	0	2760	8055	0	2953	8695	0	3081	10630	0	3436	12745	0	3726	13945	0	3843	15944	0	4074

EWB : Evaporator Wet Bulb temperature (°C)

EDB : Evaporator Dry Bulb temperature (°C)

(°CDB) : Outdoor Unit Inlet Air Dry Temperature (°C)

TC : Total Capacity (W)

SHC : Sensible Heating Capacity (W)

PI : Power Input

	INDOOR	OUTDOOR TEMPERATURE (°CDW)																							
	EDB	-15			-10			-7			-5			0			7			10			15		
	°C	TC	SHC	PI	TC	SHC	PI	TC	SHC	PI	TC	SHC	PI	TC	SHC	PI	TC	SHC	PI	TC	SHC	PI	TC	SHC	PI
(1.2+2.5)+(1.8 +1.8+3.5)	16	4644	0	2553	7353	0	2622	8382	0	2734	9069	0	2808	11042	0	3143	13042	0	3184	14229	0	3271	16422	0	3433
	18	4580	0	2588	7289	0	2657	8302	0	2791	8978	0	2881	10926	0	3222	12977	0	3347	14177	0	3416	16357	0	3595
	20	4515	0	2622	7224	0	2691	8230	0	2836	8901	0	2933	10836	0	3278	12900	0	3450	13868	0	3571	16254	0	3761
	22	4451	0	2657	7160	0	2726	8127	0	2895	8772	0	3008	10720	0	3357	12823	0	3588	14022	0	3702	16177	0	3916
	24	4386	0	2691	7095	0	2760	8055	0	2953	8695	0	3081	10630	0	3436	12745	0	3726	13945	0	3843	15944	0	4074
(1.2+2.5)+(1.8 +1.8+5)	16	4644	0	2553	7353	0	2622	8382	0	2734	9069	0	2808	11042	0	3143	13042	0	3184	14229	0	3271	16422	0	3433
	18	4580	0	2588	7289	0	2657	8302	0	2791	8978	0	2881	10926	0	3222	12977	0	3347	14177	0	3416	16357	0	3595
	20	4515	0	2622	7224	0	2691	8230	0	2836	8901	0	2933	10836	0	3278	12900	0	3450	13868	0	3571	16254	0	3761
	22	4451	0	2657	7160	0	2726	8127	0	2895	8772	0	3008	10720	0	3357	12823	0	3588	14022	0	3702	16177	0	3916
	24	4386	0	2691	7095	0	2760	8055	0	2953	8695	0	3081	10630	0	3436	12745	0	3726	13945	0	3843	15944	0	4074
(1.2+2.5)+(1.8 +2.5+2.5)	16	4644	0	2553	7353	0	2622	8382	0	2734	9069	0	2808	11042	0	3143	13042	0	3184	14229	0	3271	16422	0	3433
	18	4580	0	2588	7289	0	2657	8302	0	2791	8978	0	2881	10926	0	3222	12977	0	3347	14177	0	3416	16357	0	3595
	20	4515	0	2622	7224	0	2691	8230	0	2836	8901	0	2933	10836	0	3278	12900	0	3450	13868	0	3571	16254	0	3761
	22	4451	0	2657	7160	0	2726	8127	0	2895	8772	0	3008	10720	0	3357	12823	0	3588	14022	0	3702	16177	0	3916
	24	4386	0	2691	7095	0	2760	8055	0	2953	8695	0	3081	10630	0	3436	12745	0	3726	13945	0	3843	15944	0	4074
(1.2+2.5)+(1.8 +2.5+3.5)	16	4644	0	2553	7353	0	2622	8382	0	2734	9069	0	2808	11042	0	3143	13042	0	3184	14229	0	3271	16422	0	3433
	18	4580	0	2588	7289	0	2657	8302	0	2791	8978	0	2881	10926	0	3222	12977	0	3347	14177	0	3416	16357	0	3595
	20	4515	0	2622	7224	0	2691	8230	0	2836	8901	0	2933	10836	0	3278	12900	0	3450	13868	0	3571	16254	0	3761
	22	4451	0	2657	7160	0	2726	8127	0	2895	8772	0	3008	10720	0	3357	12823	0	3588	14022	0	3702	16177	0	3916
	24	4386	0	2691	7095	0	2760	8055	0	2953	8695	0	3081	10630	0	3436	12745	0	3726	13945	0	3843	15944	0	4074
(1.2+2.5)+(1.8 +3.5+3.5)	16	4644	0	2553	7353	0	2622	8382	0	2734	9069	0	2808	11042	0	3143	13042	0	3184	14229	0	3271	16422	0	3433
	18	4580	0	2588	7289	0	2657	8302	0	2791	8978	0	2881	10926	0	3222	12977	0	3347	14177	0	3416	16357	0	3595
	20	4515	0	2622	7224	0	2691	8230	0	2836	8901	0	2933	10836	0	3278	12900	0	3450	13868	0	3571	16254	0	3761
	22	4451	0	2657	7160	0	2726	8127	0	2895	8772	0	3008	10720	0	3357	12823	0	3588	14022	0	3702	16177	0	3916
	24	4386	0	2691	7095	0	2760	8055	0	2953	8695	0	3081	10630	0	3436	12745	0	3726	13945	0	3843	15944	0	4074
(1.2+2.5)+(2.5 +2.5+2.5)	16	4644	0	2553	7353	0	2622	8382	0	2734	9069	0	2808	11042	0	3143	13042	0	3184	14229	0	3271	16422	0	3433
	18	4580	0	2588	7289	0	2657	8302	0	2791	8978	0	2881	10926	0	3222	12977	0	3347	14177	0	3416	16357	0	3595
	20	4515	0	2622	7224	0	2691	8230	0	2836	8901	0	2933	10836	0	3278	12900	0	3450	13868	0	3571	16254	0	3761
	22	4451	0	2657	7160	0	2726	8127	0	2895	8772	0	3008	10720	0	3357	12823	0	3588	14022	0	3702	16177	0	3916
	24	4386	0	2691	7095	0	2760	8055	0	2953	8695	0	3081	10630	0	3436	12745	0	3726	13945	0	3843	15944	0	4074
(1.2+2.5)+(2.5 +2.5+3.5)	16	4644	0	2553	7353	0	2622	8382	0	2734	9069	0	2808	11042	0	3143	13042	0	3184	14229	0	3271	16422	0	3433
	18	4580	0	2588	7289	0	2657	8302	0	2791	8978	0	2881	10926	0	3222	12977	0	3347	14177	0	3416	16357	0	3595
	20	4515	0	2622	7224	0	2691	8230	0	2836	8901	0	2933	10836	0	3278	12900	0	3450	13868	0	3571	16254	0	3761
	22	4451	0	2657	7160	0	2726	8127	0	2895	8772	0	3008	10720	0	3357	12823	0	3588	14022	0	3702	16177	0	3916
	24	4386	0	2691	7095	0	2760	8055	0	2953	8695	0	3081	10630	0	3436	12745	0	3726	13945	0	3843	15944	0	4074
(1.2+3.5)+(1.2 +1.2+1.2)	16	4320	0	2464	6840	0	2531	7798	0	2639	8436	0	2711	10272	0	3034	12132	0	3074	13236	0	3157	15276	0	3313
	18	4260	0	2498	6780	0	2564	7723	0	2694	8352	0	2781	10164	0	3110	12072	0	3230	13188	0	3297	15216	0	3470
	20	4200	0	2531	6720	0	2597	7656	0	2737	8280	0	2831	10080	0	3164	12000	0	3330	12900	0	3447	15120	0	3630
	22	4140	0	2564	6660	0	2631	7560	0	2795	8160	0	2904	9972	0	3240	11928	0	3463	13044	0	3573	15048	0	3780
	24	4080	0	2597	6600	0	2664	7493	0	2850	8088	0	2974	9888	0	3317	11856	0	3596	12972	0	3710	14832	0	3933

EWB : Evaporator Wet Bulb temperature (°C)

EDB : Evaporator Dry Bulb temperature (°C)

(°CDB) : Outdoor Unit Inlet Air Dry Temperature (°C)

TC : Total Capacity (W)

SHC : Sensible Heating Capacity (W)

PI : Power Input

	INDOOR	OUTDOOR TEMPERATURE (°CDW)																							
	EDB	-15			-10			-7			-5			0			7			10			15		
	°C	TC	SHC	PI	TC	SHC	PI	TC	SHC	PI	TC	SHC	PI	TC	SHC	PI	TC	SHC	PI	TC	SHC	PI	TC	SHC	PI
(1.2+3.5)+(1.2+1.2+1.8)	16	4572	0	2538	7239	0	2607	8252	0	2718	8928	0	2792	10871	0	3125	12840	0	3166	14008	0	3252	16167	0	3413
	18	4509	0	2573	7176	0	2641	8174	0	2775	8839	0	2864	10757	0	3204	12776	0	3327	13957	0	3396	16104	0	3574
	20	4445	0	2607	7112	0	2675	8103	0	2819	8763	0	2916	10668	0	3259	12700	0	3430	13653	0	3550	16002	0	3739
	22	4382	0	2641	7049	0	2710	8001	0	2878	8636	0	2991	10554	0	3337	12624	0	3567	13805	0	3680	15926	0	3893
	24	4318	0	2675	6985	0	2744	7930	0	2935	8560	0	3063	10465	0	3416	12548	0	3704	13729	0	3821	15697	0	4051
(1.2+3.5)+(1.2+1.2+2.5)	16	4968	0	2775	7866	0	2850	8967	0	2972	9701	0	3053	11813	0	3416	13952	0	3461	15221	0	3555	17567	0	3731
	18	4899	0	2813	7797	0	2888	8882	0	3034	9605	0	3131	11689	0	3503	13883	0	3638	15166	0	3713	17498	0	3908
	20	4830	0	2850	7728	0	2925	8804	0	3083	9522	0	3188	11592	0	3563	13800	0	3750	14835	0	3881	17388	0	4088
	22	4761	0	2888	7659	0	2963	8694	0	3147	9384	0	3270	11468	0	3649	13717	0	3900	15001	0	4024	17305	0	4256
	24	4692	0	2925	7590	0	3000	8617	0	3209	9301	0	3349	11371	0	3735	13634	0	4050	14918	0	4178	17057	0	4429
(1.2+3.5)+(1.2+1.2+3.5)	16	4968	0	2775	7866	0	2850	8967	0	2972	9701	0	3053	11813	0	3416	13952	0	3461	15221	0	3555	17567	0	3731
	18	4899	0	2813	7797	0	2888	8882	0	3034	9605	0	3131	11689	0	3503	13883	0	3638	15166	0	3713	17498	0	3908
	20	4830	0	2850	7728	0	2925	8804	0	3083	9522	0	3188	11592	0	3563	13800	0	3750	14835	0	3881	17388	0	4088
	22	4761	0	2888	7659	0	2963	8694	0	3147	9384	0	3270	11468	0	3649	13717	0	3900	15001	0	4024	17305	0	4256
	24	4692	0	2925	7590	0	3000	8617	0	3209	9301	0	3349	11371	0	3735	13634	0	4050	14918	0	4178	17057	0	4429
(1.2+3.5)+(1.2+1.2+5)	16	4968	0	2775	7866	0	2850	8967	0	2972	9701	0	3053	11813	0	3416	13952	0	3461	15221	0	3555	17567	0	3731
	18	4899	0	2813	7797	0	2888	8882	0	3034	9605	0	3131	11689	0	3503	13883	0	3638	15166	0	3713	17498	0	3908
	20	4830	0	2850	7728	0	2925	8804	0	3083	9522	0	3188	11592	0	3563	13800	0	3750	14835	0	3881	17388	0	4088
	22	4761	0	2888	7659	0	2963	8694	0	3147	9384	0	3270	11468	0	3649	13717	0	3900	15001	0	4024	17305	0	4256
	24	4692	0	2925	7590	0	3000	8617	0	3209	9301	0	3349	11371	0	3735	13634	0	4050	14918	0	4178	17057	0	4429
(1.2+3.5)+(1.2+1.8+1.8)	16	4824	0	2664	7638	0	2736	8707	0	2853	9420	0	2930	11470	0	3280	13547	0	3323	14780	0	3413	17058	0	3582
	18	4757	0	2700	7571	0	2772	8624	0	2912	9326	0	3006	11350	0	3362	13480	0	3492	14727	0	3564	16991	0	3751
	20	4690	0	2736	7504	0	2808	8549	0	2959	9246	0	3060	11256	0	3420	13400	0	3600	14405	0	3726	16884	0	3924
	22	4623	0	2772	7437	0	2844	8442	0	3021	9112	0	3139	11135	0	3503	13320	0	3744	14566	0	3863	16804	0	4086
	24	4556	0	2808	7370	0	2880	8367	0	3081	9032	0	3215	11042	0	3586	13239	0	3888	14485	0	4010	16562	0	4252
(1.2+3.5)+(1.2+1.8+2.5)	16	4968	0	2775	7866	0	2850	8967	0	2972	9701	0	3053	11813	0	3416	13952	0	3461	15221	0	3555	17567	0	3731
	18	4899	0	2813	7797	0	2888	8882	0	3034	9605	0	3131	11689	0	3503	13883	0	3638	15166	0	3713	17498	0	3908
	20	4830	0	2850	7728	0	2925	8804	0	3083	9522	0	3188	11592	0	3563	13800	0	3750	14835	0	3881	17388	0	4088
	22	4761	0	2888	7659	0	2963	8694	0	3147	9384	0	3270	11468	0	3649	13717	0	3900	15001	0	4024	17305	0	4256
	24	4692	0	2925	7590	0	3000	8617	0	3209	9301	0	3349	11371	0	3735	13634	0	4050	14918	0	4178	17057	0	4429
(1.2+3.5)+(1.2+1.8+3.5)	16	4968	0	2775	7866	0	2850	8967	0	2972	9701	0	3053	11813	0	3416	13952	0	3461	15221	0	3555	17567	0	3731
	18	4899	0	2813	7797	0	2888	8882	0	3034	9605	0	3131	11689	0	3503	13883	0	3638	15166	0	3713	17498	0	3908
	20	4830	0	2850	7728	0	2925	8804	0	3083	9522	0	3188	11592	0	3563	13800	0	3750	14835	0	3881	17388	0	4088
	22	4761	0	2888	7659	0	2963	8694	0	3147	9384	0	3270	11468	0	3649	13717	0	3900	15001	0	4024	17305	0	4256
	24	4692	0	2925	7590	0	3000	8617	0	3209	9301	0	3349	11371	0	3735	13634	0	4050	14918	0	4178	17057	0	4429
(1.2+3.5)+(1.2+1.8+5)	16	4968	0	2775	7866	0	2850	8967	0	2972	9701	0	3053	11813	0	3416	13952	0	3461	15221	0	3555	17567	0	3731
	18	4899	0	2813	7797	0	2888	8882	0	3034	9605	0	3131	11689	0	3503	13883	0	3638	15166	0	3713	17498	0	3908
	20	4830	0	2850	7728	0	2925	8804	0	3083	9522	0	3188	11592	0	3563	13800	0	3750	14835	0	3881	17388	0	4088
	22	4761	0	2888	7659	0	2963	8694	0	3147	9384	0	3270	11468	0	3649	13717	0	3900	15001	0	4024	17305	0	4256
	24	4692	0	2925	7590	0	3000	8617	0	3209	9301	0	3349	11371	0	3735	13634	0	4050	14918	0	4178	17057	0	4429

EWB : Evaporator Wet Bulb temperature (°C)

EDB : Evaporator Dry Bulb temperature (°C)

(°CDB) : Outdoor Unit Inlet Air Dry Temperature (°C)

TC : Total Capacity (W)

SHC : Sensible Heating Capacity (W)

PI : Power Input

	INDOOR	OUTDOOR TEMPERATURE (°CDW)																							
	EDB	-15			-10			-7			-5			0			7			10			15		
	°C	TC	SHC	PI	TC	SHC	PI	TC	SHC	PI	TC	SHC	PI	TC	SHC	PI	TC	SHC	PI	TC	SHC	PI	TC	SHC	PI
(1.2+3.5)+(1.2+2.5+2.5)	16	4968	0	2775	7866	0	2850	8967	0	2972	9701	0	3053	11813	0	3416	13952	0	3461	15221	0	3555	17567	0	3731
	18	4899	0	2813	7797	0	2888	8882	0	3034	9605	0	3131	11689	0	3503	13883	0	3638	15166	0	3713	17498	0	3908
	20	4830	0	2850	7728	0	2925	8804	0	3083	9522	0	3188	11592	0	3563	13800	0	3750	14835	0	3881	17388	0	4088
	22	4761	0	2888	7659	0	2963	8694	0	3147	9384	0	3270	11468	0	3649	13717	0	3900	15001	0	4024	17305	0	4256
	24	4692	0	2925	7590	0	3000	8617	0	3209	9301	0	3349	11371	0	3735	13634	0	4050	14918	0	4178	17057	0	4429
(1.2+3.5)+(1.2+2.5+3.5)	16	4968	0	2775	7866	0	2850	8967	0	2972	9701	0	3053	11813	0	3416	13952	0	3461	15221	0	3555	17567	0	3731
	18	4899	0	2813	7797	0	2888	8882	0	3034	9605	0	3131	11689	0	3503	13883	0	3638	15166	0	3713	17498	0	3908
	20	4830	0	2850	7728	0	2925	8804	0	3083	9522	0	3188	11592	0	3563	13800	0	3750	14835	0	3881	17388	0	4088
	22	4761	0	2888	7659	0	2963	8694	0	3147	9384	0	3270	11468	0	3649	13717	0	3900	15001	0	4024	17305	0	4256
	24	4692	0	2925	7590	0	3000	8617	0	3209	9301	0	3349	11371	0	3735	13634	0	4050	14918	0	4178	17057	0	4429
(1.2+3.5)+(1.2+3.5+3.5)	16	4968	0	2775	7866	0	2850	8967	0	2972	9701	0	3053	11813	0	3416	13952	0	3461	15221	0	3555	17567	0	3731
	18	4899	0	2813	7797	0	2888	8882	0	3034	9605	0	3131	11689	0	3503	13883	0	3638	15166	0	3713	17498	0	3908
	20	4830	0	2850	7728	0	2925	8804	0	3083	9522	0	3188	11592	0	3563	13800	0	3750	14835	0	3881	17388	0	4088
	22	4761	0	2888	7659	0	2963	8694	0	3147	9384	0	3270	11468	0	3649	13717	0	3900	15001	0	4024	17305	0	4256
	24	4692	0	2925	7590	0	3000	8617	0	3209	9301	0	3349	11371	0	3735	13634	0	4050	14918	0	4178	17057	0	4429
(1.2+3.5)+(1.8+1.8+1.8)	16	4896	0	2738	7751	0	2812	8837	0	2932	9560	0	3012	11641	0	3371	13749	0	3415	15000	0	3508	17312	0	3682
	18	4828	0	2775	7683	0	2849	8752	0	2993	9465	0	3090	11518	0	3456	13681	0	3589	14945	0	3663	17244	0	3855
	20	4760	0	2812	7615	0	2886	8676	0	3041	9383	0	3145	11423	0	3515	13599	0	3700	14619	0	3830	17135	0	4033
	22	4692	0	2849	7547	0	2923	8567	0	3105	9247	0	3226	11301	0	3600	13517	0	3848	14782	0	3970	17053	0	4200
	24	4624	0	2886	7479	0	2960	8491	0	3166	9166	0	3304	11206	0	3685	13436	0	3996	14701	0	4122	16808	0	4370
(1.2+3.5)+(1.8+1.8+2.5)	16	4968	0	2775	7866	0	2850	8967	0	2972	9701	0	3053	11813	0	3416	13952	0	3461	15221	0	3555	17567	0	3731
	18	4899	0	2813	7797	0	2888	8882	0	3034	9605	0	3131	11689	0	3503	13883	0	3638	15166	0	3713	17498	0	3908
	20	4830	0	2850	7728	0	2925	8804	0	3083	9522	0	3188	11592	0	3563	13800	0	3750	14835	0	3881	17388	0	4088
	22	4761	0	2888	7659	0	2963	8694	0	3147	9384	0	3270	11468	0	3649	13717	0	3900	15001	0	4024	17305	0	4256
	24	4692	0	2925	7590	0	3000	8617	0	3209	9301	0	3349	11371	0	3735	13634	0	4050	14918	0	4178	17057	0	4429
(1.2+3.5)+(1.8+1.8+3.5)	16	4968	0	2775	7866	0	2850	8967	0	2972	9701	0	3053	11813	0	3416	13952	0	3461	15221	0	3555	17567	0	3731
	18	4899	0	2813	7797	0	2888	8882	0	3034	9605	0	3131	11689	0	3503	13883	0	3638	15166	0	3713	17498	0	3908
	20	4830	0	2850	7728	0	2925	8804	0	3083	9522	0	3188	11592	0	3563	13800	0	3750	14835	0	3881	17388	0	4088
	22	4761	0	2888	7659	0	2963	8694	0	3147	9384	0	3270	11468	0	3649	13717	0	3900	15001	0	4024	17305	0	4256
	24	4692	0	2925	7590	0	3000	8617	0	3209	9301	0	3349	11371	0	3735	13634	0	4050	14918	0	4178	17057	0	4429
(1.2+3.5)+(1.8+1.8+5)	16	4968	0	2775	7866	0	2850	8967	0	2972	9701	0	3053	11813	0	3416	13952	0	3461	15221	0	3555	17567	0	3731
	18	4899	0	2813	7797	0	2888	8882	0	3034	9605	0	3131	11689	0	3503	13883	0	3638	15166	0	3713	17498	0	3908
	20	4830	0	2850	7728	0	2925	8804	0	3083	9522	0	3188	11592	0	3563	13800	0	3750	14835	0	3881	17388	0	4088
	22	4761	0	2888	7659	0	2963	8694	0	3147	9384	0	3270	11468	0	3649	13717	0	3900	15001	0	4024	17305	0	4256
	24	4692	0	2925	7590	0	3000	8617	0	3209	9301	0	3349	11371	0	3735	13634	0	4050	14918	0	4178	17057	0	4429
(1.2+3.5)+(1.8+2.5+2.5)	16	4968	0	2775	7866	0	2850	8967	0	2972	9701	0	3053	11813	0	3416	13952	0	3461	15221	0	3555	17567	0	3731
	18	4899	0	2813	7797	0	2888	8882	0	3034	9605	0	3131	11689	0	3503	13883	0	3638	15166	0	3713	17498	0	3908
	20	4830	0	2850	7728	0	2925	8804	0	3083	9522	0	3188	11592	0	3563	13800	0	3750	14835	0	3881	17388	0	4088
	22	4761	0	2888	7659	0	2963	8694	0	3147	9384	0	3270	11468	0	3649	13717	0	3900	15001	0	4024	17305	0	4256
	24	4692	0	2925	7590	0	3000	8617	0	3209	9301	0	3349	11371	0	3735	13634	0	4050	14918	0	4178	17057	0	4429

EWB : Evaporator Wet Bulb temperature (°C)

EDB : Evaporator Dry Bulb temperature (°C)

(°CDB) : Outdoor Unit Inlet Air Dry Temperature (°C)

TC : Total Capacity (W)

SHC : Sensible Heating Capacity (W)

PI : Power Input

	INDOOR	OUTDOOR TEMPERATURE (°CDW)																							
	EDB	-15			-10			-7			-5			0			7			10			15		
	°C	TC	SHC	PI	TC	SHC	PI	TC	SHC	PI	TC	SHC	PI	TC	SHC	PI	TC	SHC	PI	TC	SHC	PI	TC	SHC	PI
(1.2+3.5)+(1.8 +2.5+3.5)	16	4968	0	2775	7866	0	2850	8967	0	2972	9701	0	3053	11813	0	3416	13952	0	3461	15221	0	3555	17567	0	3731
	18	4899	0	2813	7797	0	2888	8882	0	3034	9605	0	3131	11689	0	3503	13883	0	3638	15166	0	3713	17498	0	3908
	20	4830	0	2850	7728	0	2925	8804	0	3083	9522	0	3188	11592	0	3563	13800	0	3750	14835	0	3881	17388	0	4088
	22	4761	0	2888	7659	0	2963	8694	0	3147	9384	0	3270	11468	0	3649	13717	0	3900	15001	0	4024	17305	0	4256
	24	4692	0	2925	7590	0	3000	8617	0	3209	9301	0	3349	11371	0	3735	13634	0	4050	14918	0	4178	17057	0	4429
(1.2+3.5)+(1.8 +3.5+3.5)	16	4968	0	2775	7866	0	2850	8967	0	2972	9701	0	3053	11813	0	3416	13952	0	3461	15221	0	3555	17567	0	3731
	18	4899	0	2813	7797	0	2888	8882	0	3034	9605	0	3131	11689	0	3503	13883	0	3638	15166	0	3713	17498	0	3908
	20	4830	0	2850	7728	0	2925	8804	0	3083	9522	0	3188	11592	0	3563	13800	0	3750	14835	0	3881	17388	0	4088
	22	4761	0	2888	7659	0	2963	8694	0	3147	9384	0	3270	11468	0	3649	13717	0	3900	15001	0	4024	17305	0	4256
	24	4692	0	2925	7590	0	3000	8617	0	3209	9301	0	3349	11371	0	3735	13634	0	4050	14918	0	4178	17057	0	4429
(1.2+3.5)+(2.5 +2.5+2.5)	16	4968	0	2775	7866	0	2850	8967	0	2972	9701	0	3053	11813	0	3416	13952	0	3461	15221	0	3555	17567	0	3731
	18	4899	0	2813	7797	0	2888	8882	0	3034	9605	0	3131	11689	0	3503	13883	0	3638	15166	0	3713	17498	0	3908
	20	4830	0	2850	7728	0	2925	8804	0	3083	9522	0	3188	11592	0	3563	13800	0	3750	14835	0	3881	17388	0	4088
	22	4761	0	2888	7659	0	2963	8694	0	3147	9384	0	3270	11468	0	3649	13717	0	3900	15001	0	4024	17305	0	4256
	24	4692	0	2925	7590	0	3000	8617	0	3209	9301	0	3349	11371	0	3735	13634	0	4050	14918	0	4178	17057	0	4429
(1.2+3.5)+(2.5 +2.5+3.5)	16	4968	0	2775	7866	0	2850	8967	0	2972	9701	0	3053	11813	0	3416	13952	0	3461	15221	0	3555	17567	0	3731
	18	4899	0	2813	7797	0	2888	8882	0	3034	9605	0	3131	11689	0	3503	13883	0	3638	15166	0	3713	17498	0	3908
	20	4830	0	2850	7728	0	2925	8804	0	3083	9522	0	3188	11592	0	3563	13800	0	3750	14835	0	3881	17388	0	4088
	22	4761	0	2888	7659	0	2963	8694	0	3147	9384	0	3270	11468	0	3649	13717	0	3900	15001	0	4024	17305	0	4256
	24	4692	0	2925	7590	0	3000	8617	0	3209	9301	0	3349	11371	0	3735	13634	0	4050	14918	0	4178	17057	0	4429
(1.2+5)+(1.2+ 1.2+1.2)	16	4536	0	2464	7182	0	2531	8187	0	2639	8858	0	2711	10786	0	3034	12739	0	3074	13898	0	3157	16040	0	3313
	18	4473	0	2498	7119	0	2564	8109	0	2694	8770	0	2781	10672	0	3110	12676	0	3230	13847	0	3297	15977	0	3470
	20	4410	0	2531	7056	0	2597	8039	0	2737	8694	0	2831	10584	0	3164	12600	0	3330	13545	0	3447	15876	0	3630
	22	4347	0	2564	6993	0	2631	7938	0	2795	8568	0	2904	10471	0	3240	12524	0	3463	13696	0	3573	15800	0	3780
	24	4284	0	2597	6930	0	2664	7867	0	2850	8492	0	2974	10382	0	3317	12449	0	3596	13621	0	3710	15574	0	3933
(1.2+5)+(1.2+ 1.2+1.8)	16	4788	0	2538	7581	0	2607	8642	0	2718	9350	0	2792	11385	0	3125	13446	0	3166	14670	0	3252	16931	0	3413
	18	4722	0	2573	7515	0	2641	8560	0	2775	9257	0	2864	11265	0	3204	13380	0	3327	14617	0	3396	16864	0	3574
	20	4655	0	2607	7448	0	2675	8485	0	2819	9177	0	2916	11172	0	3259	13300	0	3430	14298	0	3550	16758	0	3739
	22	4589	0	2641	7382	0	2710	8379	0	2878	9044	0	2991	11052	0	3337	13220	0	3567	14457	0	3680	16678	0	3893
	24	4522	0	2675	7315	0	2744	8305	0	2935	8964	0	3063	10959	0	3416	13140	0	3704	14377	0	3821	16439	0	4051
(1.2+5)+(1.2+ 1.2+2.5)	16	5184	0	2775	8208	0	2850	9357	0	2972	10123	0	3053	12326	0	3416	14558	0	3461	15883	0	3555	18331	0	3731
	18	5112	0	2813	8136	0	2888	9268	0	3034	10022	0	3131	12197	0	3503	14486	0	3638	15826	0	3713	18259	0	3908
	20	5040	0	2850	8064	0	2925	9187	0	3083	9936	0	3188	12096	0	3563	14400	0	3750	15480	0	3881	18144	0	4088
	22	4968	0	2888	7992	0	2963	9072	0	3147	9792	0	3270	11966	0	3649	14314	0	3900	15653	0	4024	18058	0	4256
	24	4896	0	2925	7920	0	3000	8991	0	3209	9706	0	3349	11866	0	3735	14227	0	4050	15566	0	4178	17798	0	4429
(1.2+5)+(1.2+ 1.2+3.5)	16	5184	0	2775	8208	0	2850	9357	0	2972	10123	0	3053	12326	0	3416	14558	0	3461	15883	0	3555	18331	0	3731
	18	5112	0	2813	8136	0	2888	9268	0	3034	10022	0	3131	12197	0	3503	14486	0	3638	15826	0	3713	18259	0	3908
	20	5040	0	2850	8064	0	2925	9187	0	3083	9936	0	3188	12096	0	3563	14400	0	3750	15480	0	3881	18144	0	4088
	22	4968	0	2888	7992	0	2963	9072	0	3147	9792	0	3270	11966	0	3649	14314	0	3900	15653	0	4024	18058	0	4256
	24	4896	0	2925	7920	0	3000	8991	0	3209	9706	0	3349	11866	0	3735	14227	0	4050	15566	0	4178	17798	0	4429

EWB : Evaporator Wet Bulb temperature (°C)

EDB : Evaporator Dry Bulb temperature (°C)

(°CDB) : Outdoor Unit Inlet Air Dry Temperature (°C)

TC : Total Capacity (W)

SHC : Sensible Heating Capacity (W)

PI : Power Input

	INDOOR	OUTDOOR TEMPERATURE (°CDW)																							
	EDB	-15			-10			-7			-5			0			7			10			15		
	°C	TC	SHC	PI	TC	SHC	PI	TC	SHC	PI	TC	SHC	PI	TC	SHC	PI	TC	SHC	PI	TC	SHC	PI	TC	SHC	PI
(1.2+5)+(1.2+1.2+5)	16	5184	0	2775	8208	0	2850	9357	0	2972	10123	0	3053	12326	0	3416	14558	0	3461	15883	0	3555	18331	0	3731
	18	5112	0	2813	8136	0	2888	9268	0	3034	10022	0	3131	12197	0	3503	14486	0	3638	15826	0	3713	18259	0	3908
	20	5040	0	2850	8064	0	2925	9187	0	3083	9936	0	3188	12096	0	3563	14400	0	3750	15480	0	3881	18144	0	4088
	22	4968	0	2888	7992	0	2963	9072	0	3147	9792	0	3270	11966	0	3649	14314	0	3900	15653	0	4024	18058	0	4256
	24	4896	0	2925	7920	0	3000	8991	0	3209	9706	0	3349	11866	0	3735	14227	0	4050	15566	0	4178	17798	0	4429
(1.2+5)+(1.2+1.8+1.8)	16	5040	0	2664	7980	0	2736	9097	0	2853	9842	0	2930	11984	0	3280	14154	0	3323	15442	0	3413	17822	0	3582
	18	4970	0	2700	7910	0	2772	9010	0	2912	9744	0	3006	11858	0	3362	14084	0	3492	15386	0	3564	17752	0	3751
	20	4900	0	2736	7840	0	2808	8932	0	2959	9660	0	3060	11760	0	3420	14000	0	3600	15050	0	3726	17640	0	3924
	22	4830	0	2772	7770	0	2844	8820	0	3021	9520	0	3139	11634	0	3503	13916	0	3744	15218	0	3863	17556	0	4086
	24	4760	0	2808	7700	0	2880	8742	0	3081	9436	0	3215	11536	0	3586	13832	0	3888	15134	0	4010	17304	0	4252
(1.2+5)+(1.2+1.8+2.5)	16	5184	0	2775	8208	0	2850	9357	0	2972	10123	0	3053	12326	0	3416	14558	0	3461	15883	0	3555	18331	0	3731
	18	5112	0	2813	8136	0	2888	9268	0	3034	10022	0	3131	12197	0	3503	14486	0	3638	15826	0	3713	18259	0	3908
	20	5040	0	2850	8064	0	2925	9187	0	3083	9936	0	3188	12096	0	3563	14400	0	3750	15480	0	3881	18144	0	4088
	22	4968	0	2888	7992	0	2963	9072	0	3147	9792	0	3270	11966	0	3649	14314	0	3900	15653	0	4024	18058	0	4256
	24	4896	0	2925	7920	0	3000	8991	0	3209	9706	0	3349	11866	0	3735	14227	0	4050	15566	0	4178	17798	0	4429
(1.2+5)+(1.2+1.8+3.5)	16	5184	0	2775	8208	0	2850	9357	0	2972	10123	0	3053	12326	0	3416	14558	0	3461	15883	0	3555	18331	0	3731
	18	5112	0	2813	8136	0	2888	9268	0	3034	10022	0	3131	12197	0	3503	14486	0	3638	15826	0	3713	18259	0	3908
	20	5040	0	2850	8064	0	2925	9187	0	3083	9936	0	3188	12096	0	3563	14400	0	3750	15480	0	3881	18144	0	4088
	22	4968	0	2888	7992	0	2963	9072	0	3147	9792	0	3270	11966	0	3649	14314	0	3900	15653	0	4024	18058	0	4256
	24	4896	0	2925	7920	0	3000	8991	0	3209	9706	0	3349	11866	0	3735	14227	0	4050	15566	0	4178	17798	0	4429
(1.2+5)+(1.2+1.8+5)	16	5184	0	2775	8208	0	2850	9357	0	2972	10123	0	3053	12326	0	3416	14558	0	3461	15883	0	3555	18331	0	3731
	18	5112	0	2813	8136	0	2888	9268	0	3034	10022	0	3131	12197	0	3503	14486	0	3638	15826	0	3713	18259	0	3908
	20	5040	0	2850	8064	0	2925	9187	0	3083	9936	0	3188	12096	0	3563	14400	0	3750	15480	0	3881	18144	0	4088
	22	4968	0	2888	7992	0	2963	9072	0	3147	9792	0	3270	11966	0	3649	14314	0	3900	15653	0	4024	18058	0	4256
	24	4896	0	2925	7920	0	3000	8991	0	3209	9706	0	3349	11866	0	3735	14227	0	4050	15566	0	4178	17798	0	4429
(1.2+5)+(1.2+2.5+2.5)	16	5184	0	2775	8208	0	2850	9357	0	2972	10123	0	3053	12326	0	3416	14558	0	3461	15883	0	3555	18331	0	3731
	18	5112	0	2813	8136	0	2888	9268	0	3034	10022	0	3131	12197	0	3503	14486	0	3638	15826	0	3713	18259	0	3908
	20	5040	0	2850	8064	0	2925	9187	0	3083	9936	0	3188	12096	0	3563	14400	0	3750	15480	0	3881	18144	0	4088
	22	4968	0	2888	7992	0	2963	9072	0	3147	9792	0	3270	11966	0	3649	14314	0	3900	15653	0	4024	18058	0	4256
	24	4896	0	2925	7920	0	3000	8991	0	3209	9706	0	3349	11866	0	3735	14227	0	4050	15566	0	4178	17798	0	4429
(1.2+5)+(1.2+2.5+3.5)	16	5184	0	2775	8208	0	2850	9357	0	2972	10123	0	3053	12326	0	3416	14558	0	3461	15883	0	3555	18331	0	3731
	18	5112	0	2813	8136	0	2888	9268	0	3034	10022	0	3131	12197	0	3503	14486	0	3638	15826	0	3713	18259	0	3908
	20	5040	0	2850	8064	0	2925	9187	0	3083	9936	0	3188	12096	0	3563	14400	0	3750	15480	0	3881	18144	0	4088
	22	4968	0	2888	7992	0	2963	9072	0	3147	9792	0	3270	11966	0	3649	14314	0	3900	15653	0	4024	18058	0	4256
	24	4896	0	2925	7920	0	3000	8991	0	3209	9706	0	3349	11866	0	3735	14227	0	4050	15566	0	4178	17798	0	4429
(1.2+5)+(1.2+3.5+3.5)	16	5184	0	2775	8208	0	2850	9357	0	2972	10123	0	3053	12326	0	3416	14558	0	3461	15883	0	3555	18331	0	3731
	18	5112	0	2813	8136	0	2888	9268	0	3034	10022	0	3131	12197	0	3503	14486	0	3638	15826	0	3713	18259	0	3908
	20	5040	0	2850	8064	0	2925	9187	0	3083	9936	0	3188	12096	0	3563	14400	0	3750	15480	0	3881	18144	0	4088
	22	4968	0	2888	7992	0	2963	9072	0	3147	9792	0	3270	11966	0	3649	14314	0	3900	15653	0	4024	18058	0	4256
	24	4896	0	2925	7920	0	3000	8991	0	3209	9706	0	3349	11866	0	3735	14227	0	4050	15566	0	4178	17798	0	4429

EWB : Evaporator Wet Bulb temperature (°C)

EDB : Evaporator Dry Bulb temperature (°C)

(°CDB) : Outdoor Unit Inlet Air Dry Temperature (°C)

TC : Total Capacity (W)

SHC : Sensible Heating Capacity (W)

PI : Power Input

	INDOOR	OUTDOOR TEMPERATURE (°CDW)																							
	EDB	-15			-10			-7			-5			0			7			10			15		
	°C	TC	SHC	PI	TC	SHC	PI	TC	SHC	PI	TC	SHC	PI	TC	SHC	PI	TC	SHC	PI	TC	SHC	PI	TC	SHC	PI
(1.2+5)+(1.8+1.8+1.8)	16	5112	0	2738	8093	0	2812	9227	0	2932	9982	0	3012	12154	0	3371	14355	0	3415	15661	0	3508	18075	0	3682
	18	5041	0	2775	8022	0	2849	9138	0	2993	9883	0	3090	12027	0	3456	14284	0	3589	15605	0	3663	18004	0	3855
	20	4970	0	2812	7951	0	2886	9059	0	3041	9797	0	3145	11927	0	3515	14199	0	3700	15264	0	3830	17891	0	4033
	22	4899	0	2849	7880	0	2923	8945	0	3105	9655	0	3226	11799	0	3600	14114	0	3848	15434	0	3970	17806	0	4200
	24	4828	0	2886	7809	0	2960	8866	0	3166	9570	0	3304	11700	0	3685	14029	0	3996	15349	0	4122	17550	0	4370
(1.2+5)+(1.8+1.8+2.5)	16	5184	0	2775	8208	0	2850	9357	0	2972	10123	0	3053	12326	0	3416	14558	0	3461	15883	0	3555	18331	0	3731
	18	5112	0	2813	8136	0	2888	9268	0	3034	10022	0	3131	12197	0	3503	14486	0	3638	15826	0	3713	18259	0	3908
	20	5040	0	2850	8064	0	2925	9187	0	3083	9936	0	3188	12096	0	3563	14400	0	3750	15480	0	3881	18144	0	4088
	22	4968	0	2888	7992	0	2963	9072	0	3147	9792	0	3270	11966	0	3649	14314	0	3900	15653	0	4024	18058	0	4256
	24	4896	0	2925	7920	0	3000	8991	0	3209	9706	0	3349	11866	0	3735	14227	0	4050	15566	0	4178	17798	0	4429
(1.2+5)+(1.8+1.8+3.5)	16	5184	0	2775	8208	0	2850	9357	0	2972	10123	0	3053	12326	0	3416	14558	0	3461	15883	0	3555	18331	0	3731
	18	5112	0	2813	8136	0	2888	9268	0	3034	10022	0	3131	12197	0	3503	14486	0	3638	15826	0	3713	18259	0	3908
	20	5040	0	2850	8064	0	2925	9187	0	3083	9936	0	3188	12096	0	3563	14400	0	3750	15480	0	3881	18144	0	4088
	22	4968	0	2888	7992	0	2963	9072	0	3147	9792	0	3270	11966	0	3649	14314	0	3900	15653	0	4024	18058	0	4256
	24	4896	0	2925	7920	0	3000	8991	0	3209	9706	0	3349	11866	0	3735	14227	0	4050	15566	0	4178	17798	0	4429
(1.2+5)+(1.8+1.8+5)	16	5184	0	2775	8208	0	2850	9357	0	2972	10123	0	3053	12326	0	3416	14558	0	3461	15883	0	3555	18331	0	3731
	18	5112	0	2813	8136	0	2888	9268	0	3034	10022	0	3131	12197	0	3503	14486	0	3638	15826	0	3713	18259	0	3908
	20	5040	0	2850	8064	0	2925	9187	0	3083	9936	0	3188	12096	0	3563	14400	0	3750	15480	0	3881	18144	0	4088
	22	4968	0	2888	7992	0	2963	9072	0	3147	9792	0	3270	11966	0	3649	14314	0	3900	15653	0	4024	18058	0	4256
	24	4896	0	2925	7920	0	3000	8991	0	3209	9706	0	3349	11866	0	3735	14227	0	4050	15566	0	4178	17798	0	4429
(1.2+5)+(1.8+2.5+2.5)	16	5184	0	2775	8208	0	2850	9357	0	2972	10123	0	3053	12326	0	3416	14558	0	3461	15883	0	3555	18331	0	3731
	18	5112	0	2813	8136	0	2888	9268	0	3034	10022	0	3131	12197	0	3503	14486	0	3638	15826	0	3713	18259	0	3908
	20	5040	0	2850	8064	0	2925	9187	0	3083	9936	0	3188	12096	0	3563	14400	0	3750	15480	0	3881	18144	0	4088
	22	4968	0	2888	7992	0	2963	9072	0	3147	9792	0	3270	11966	0	3649	14314	0	3900	15653	0	4024	18058	0	4256
	24	4896	0	2925	7920	0	3000	8991	0	3209	9706	0	3349	11866	0	3735	14227	0	4050	15566	0	4178	17798	0	4429
(1.2+5)+(1.8+2.5+3.5)	16	5184	0	2775	8208	0	2850	9357	0	2972	10123	0	3053	12326	0	3416	14558	0	3461	15883	0	3555	18331	0	3731
	18	5112	0	2813	8136	0	2888	9268	0	3034	10022	0	3131	12197	0	3503	14486	0	3638	15826	0	3713	18259	0	3908
	20	5040	0	2850	8064	0	2925	9187	0	3083	9936	0	3188	12096	0	3563	14400	0	3750	15480	0	3881	18144	0	4088
	22	4968	0	2888	7992	0	2963	9072	0	3147	9792	0	3270	11966	0	3649	14314	0	3900	15653	0	4024	18058	0	4256
	24	4896	0	2925	7920	0	3000	8991	0	3209	9706	0	3349	11866	0	3735	14227	0	4050	15566	0	4178	17798	0	4429
(1.2+5)+(1.8+3.5+3.5)	16	5184	0	2775	8208	0	2850	9357	0	2972	10123	0	3053	12326	0	3416	14558	0	3461	15883	0	3555	18331	0	3731
	18	5112	0	2813	8136	0	2888	9268	0	3034	10022	0	3131	12197	0	3503	14486	0	3638	15826	0	3713	18259	0	3908
	20	5040	0	2850	8064	0	2925	9187	0	3083	9936	0	3188	12096	0	3563	14400	0	3750	15480	0	3881	18144	0	4088
	22	4968	0	2888	7992	0	2963	9072	0	3147	9792	0	3270	11966	0	3649	14314	0	3900	15653	0	4024	18058	0	4256
	24	4896	0	2925	7920	0	3000	8991	0	3209	9706	0	3349	11866	0	3735	14227	0	4050	15566	0	4178	17798	0	4429
(1.2+5)+(2.5+2.5+2.5)	16	5184	0	2775	8208	0	2850	9357	0	2972	10123	0	3053	12326	0	3416	14558	0	3461	15883	0	3555	18331	0	3731
	18	5112	0	2813	8136	0	2888	9268	0	3034	10022	0	3131	12197	0	3503	14486	0	3638	15826	0	3713	18259	0	3908
	20	5040	0	2850	8064	0	2925	9187	0	3083	9936	0	3188	12096	0	3563	14400	0	3750	15480	0	3881	18144	0	4088
	22	4968	0	2888	7992	0	2963	9072	0	3147	9792	0	3270	11966	0	3649	14314	0	3900	15653	0	4024	18058	0	4256
	24	4896	0	2925	7920	0	3000	8991	0	3209	9706	0	3349	11866	0	3735	14227	0	4050	15566	0	4178	17798	0	4429

EWB : Evaporator Wet Bulb temperature (°C)

EDB : Evaporator Dry Bulb temperature (°C)

(°CDB) : Outdoor Unit Inlet Air Dry Temperature (°C)

TC : Total Capacity (W)

SHC : Sensible Heating Capacity (W)

PI : Power Input

	INDOOR	OUTDOOR TEMPERATURE (°CDW)																							
	EDB	-15			-10			-7			-5			0			7			10			15		
	°C	TC	SHC	PI	TC	SHC	PI	TC	SHC	PI	TC	SHC	PI	TC	SHC	PI	TC	SHC	PI	TC	SHC	PI	TC	SHC	PI
(1.2+5)+(2.5+2.5+3.5)	16	5184	0	2775	8208	0	2850	9357	0	2972	10123	0	3053	12326	0	3416	14558	0	3461	15883	0	3555	18331	0	3731
	18	5112	0	2813	8136	0	2888	9268	0	3034	10022	0	3131	12197	0	3503	14486	0	3638	15826	0	3713	18259	0	3908
	20	5040	0	2850	8064	0	2925	9187	0	3083	9936	0	3188	12096	0	3563	14400	0	3750	15480	0	3881	18144	0	4088
	22	4968	0	2888	7992	0	2963	9072	0	3147	9792	0	3270	11966	0	3649	14314	0	3900	15653	0	4024	18058	0	4256
	24	4896	0	2925	7920	0	3000	8991	0	3209	9706	0	3349	11866	0	3735	14227	0	4050	15566	0	4178	17798	0	4429
(1.8+1.8)+(1.8+1.8+1.8)	16	4320	0	2449	6839	0	2516	7797	0	2623	8435	0	2694	10271	0	3015	12131	0	3055	13235	0	3138	15275	0	3293
	18	4260	0	2483	6779	0	2549	7723	0	2678	8351	0	2764	10163	0	3092	12071	0	3211	13187	0	3277	15215	0	3449
	20	4200	0	2516	6719	0	2582	7655	0	2721	8279	0	2814	10079	0	3145	11999	0	3310	12899	0	3426	15119	0	3608
	22	4140	0	2549	6659	0	2615	7559	0	2778	8159	0	2886	9971	0	3221	11927	0	3442	13043	0	3552	15047	0	3757
	24	4080	0	2582	6599	0	2648	7492	0	2833	8087	0	2956	9887	0	3297	11855	0	3575	12971	0	3687	14831	0	3909
(1.8+1.8)+(1.8+1.8+2.5)	16	4392	0	2486	6954	0	2554	7928	0	2662	8577	0	2735	10443	0	3061	12334	0	3101	13457	0	3185	15531	0	3343
	18	4331	0	2520	6893	0	2587	7852	0	2718	8491	0	2806	10333	0	3138	12273	0	3259	13408	0	3326	15470	0	3501
	20	4270	0	2554	6832	0	2621	7784	0	2762	8418	0	2856	10248	0	3192	12200	0	3360	13115	0	3478	15372	0	3662
	22	4209	0	2587	6771	0	2654	7686	0	2820	8296	0	2930	10138	0	3269	12127	0	3494	13261	0	3605	15299	0	3814
	24	4148	0	2621	6710	0	2688	7618	0	2875	8223	0	3000	10053	0	3347	12054	0	3629	13188	0	3743	15079	0	3968
(1.8+3.5)+(1.8+1.8+1.8)	16	4968	0	2845	7865	0	2922	8967	0	3047	9701	0	3130	11812	0	3503	13951	0	3549	15220	0	3645	17566	0	3826
	18	4899	0	2884	7796	0	2961	8881	0	3111	9604	0	3211	11688	0	3591	13882	0	3730	15165	0	3807	17497	0	4006
	20	4830	0	2922	7727	0	2999	8804	0	3161	9521	0	3268	11591	0	3653	13799	0	3845	14834	0	3980	17387	0	4191
	22	4761	0	2961	7658	0	3038	8693	0	3227	9383	0	3353	11467	0	3741	13716	0	3999	15000	0	4126	17304	0	4364
	24	4692	0	2999	7589	0	3076	8616	0	3291	9301	0	3434	11370	0	3830	13633	0	4153	14917	0	4283	17056	0	4541
(1.8+5)+(1.8+1.8+1.8)	16	5040	0	2886	7979	0	2964	9097	0	3090	9841	0	3175	11983	0	3553	14153	0	3600	15441	0	3697	17821	0	3881
	18	4970	0	2925	7909	0	3003	9010	0	3155	9743	0	3257	11857	0	3643	14083	0	3783	15385	0	3861	17751	0	4064
	20	4900	0	2964	7839	0	3042	8931	0	3206	9659	0	3315	11759	0	3705	13999	0	3900	15049	0	4037	17639	0	4251
	22	4830	0	3003	7769	0	3081	8819	0	3273	9519	0	3401	11633	0	3795	13915	0	4056	15217	0	4185	17555	0	4427
	24	4760	0	3042	7699	0	3120	8741	0	3338	9435	0	3483	11535	0	3884	13831	0	4212	15133	0	4345	17303	0	4606
(1.8+2.5)+(1.8+1.8+2.5)	16	4824	0	2753	7638	0	2827	8707	0	2948	9420	0	3028	11470	0	3389	13547	0	3434	14780	0	3527	17058	0	3701
	18	4757	0	2790	7571	0	2864	8624	0	3009	9326	0	3106	11350	0	3474	13480	0	3608	14727	0	3683	16991	0	3876
	20	4690	0	2827	7504	0	2902	8549	0	3058	9246	0	3162	11256	0	3534	13400	0	3720	14405	0	3850	16884	0	4055
	22	4623	0	2864	7437	0	2939	8442	0	3122	9112	0	3244	11135	0	3620	13320	0	3869	14566	0	3992	16804	0	4222
	24	4556	0	2902	7370	0	2976	8367	0	3184	9032	0	3322	11042	0	3705	13239	0	4018	14485	0	4144	16562	0	4393
(1.8+3.5)+(1.8+1.8+2.5)	16	5040	0	2882	7980	0	2960	9097	0	3086	9842	0	3171	11984	0	3548	14154	0	3595	15442	0	3692	17822	0	3876
	18	4970	0	2921	7910	0	2999	9010	0	3151	9744	0	3252	11858	0	3638	14084	0	3778	15386	0	3856	17752	0	4059
	20	4900	0	2960	7840	0	3038	8932	0	3202	9660	0	3311	11760	0	3700	14000	0	3895	15050	0	4031	17640	0	4246
	22	4830	0	2999	7770	0	3077	8820	0	3269	9520	0	3396	11634	0	3790	13916	0	4051	15218	0	4179	17556	0	4421
	24	4760	0	3038	7700	0	3116	8742	0	3333	9436	0	3478	11536	0	3879	13832	0	4207	15134	0	4339	17304	0	4600
(1.8+5)+(1.8+1.8+2.5)	16	5112	0	2923	8094	0	3002	9227	0	3130	9983	0	3215	12155	0	3598	14356	0	3646	15663	0	3745	18077	0	3930
	18	5041	0	2963	8023	0	3042	9139	0	3196	9883	0	3298	12027	0	3689	14285	0	3832	15606	0	3911	18006	0	4116
	20	4970	0	3002	7952	0	3081	9060	0	3247	9798	0	3358	11928	0	3753	14200	0	3950	15265	0	4088	17892	0	4306
	22	4899	0	3042	7881	0	3121	8946	0	3315	9656	0	3444	11800	0	3843	14115	0	4108	15435	0	4238	17807	0	4483
	24	4828	0	3081	7810	0	3160	8866	0	3380	9571	0	3527	11701	0	3934	14030	0	4266	15350	0	4400	17551	0	4665

EWB : Evaporator Wet Bulb temperature (°C)

EDB : Evaporator Dry Bulb temperature (°C)

(°CDB) : Outdoor Unit Inlet Air Dry Temperature (°C)

TC : Total Capacity (W)

SHC : Sensible Heating Capacity (W)

PI : Power Input

	INDOOR	OUTDOOR TEMPERATURE (°CDW)																							
	EDB	-15			-10			-7			-5			0			7			10			15		
	°C	TC	SHC	PI	TC	SHC	PI	TC	SHC	PI	TC	SHC	PI	TC	SHC	PI	TC	SHC	PI	TC	SHC	PI	TC	SHC	PI
(1.8+3.5)+(1.8 +1.8+3.5)	16	5040	0	2882	7980	0	2960	9097	0	3086	9842	0	3171	11984	0	3548	14154	0	3595	15442	0	3692	17822	0	3876
	18	4970	0	2921	7910	0	2999	9010	0	3151	9744	0	3252	11858	0	3638	14084	0	3778	15386	0	3856	17752	0	4059
	20	4900	0	2960	7840	0	3038	8932	0	3202	9660	0	3311	11760	0	3700	14000	0	3895	15050	0	4031	17640	0	4246
	22	4830	0	2999	7770	0	3077	8820	0	3269	9520	0	3396	11634	0	3790	13916	0	4051	15218	0	4179	17556	0	4421
	24	4760	0	3038	7700	0	3116	8742	0	3333	9436	0	3478	11536	0	3879	13832	0	4207	15134	0	4339	17304	0	4600
(1.8+5)+(1.8+ 1.8+3.5)	16	5112	0	2923	8094	0	3002	9227	0	3130	9983	0	3215	12155	0	3598	14356	0	3646	15663	0	3745	18077	0	3930
	18	5041	0	2963	8023	0	3042	9139	0	3196	9883	0	3298	12027	0	3689	14285	0	3832	15606	0	3911	18006	0	4116
	20	4970	0	3002	7952	0	3081	9060	0	3247	9798	0	3358	11928	0	3753	14200	0	3950	15265	0	4088	17892	0	4306
	22	4899	0	3042	7881	0	3121	8946	0	3315	9656	0	3444	11800	0	3843	14115	0	4108	15435	0	4238	17807	0	4483
	24	4828	0	3081	7810	0	3160	8866	0	3380	9571	0	3527	11701	0	3934	14030	0	4266	15350	0	4400	17551	0	4665
(1.8+5)+(1.8+ 1.8+5)	16	5112	0	2923	8094	0	3002	9227	0	3130	9983	0	3215	12155	0	3598	14356	0	3646	15663	0	3745	18077	0	3930
	18	5041	0	2963	8023	0	3042	9139	0	3196	9883	0	3298	12027	0	3689	14285	0	3832	15606	0	3911	18006	0	4116
	20	4970	0	3002	7952	0	3081	9060	0	3247	9798	0	3358	11928	0	3753	14200	0	3950	15265	0	4088	17892	0	4306
	22	4899	0	3042	7881	0	3121	8946	0	3315	9656	0	3444	11800	0	3843	14115	0	4108	15435	0	4238	17807	0	4483
	24	4828	0	3081	7810	0	3160	8866	0	3380	9571	0	3527	11701	0	3934	14030	0	4266	15350	0	4400	17551	0	4665
(2.5+2.5)+(1.8 +1.8+2.5)	16	5040	0	2897	7980	0	2975	9097	0	3102	9842	0	3187	11984	0	3567	14154	0	3614	15442	0	3711	17822	0	3895
	18	4970	0	2936	7910	0	3015	9010	0	3167	9744	0	3269	11858	0	3657	14084	0	3798	15386	0	3876	17752	0	4079
	20	4900	0	2975	7840	0	3054	8932	0	3218	9660	0	3328	11760	0	3719	14000	0	3915	15050	0	4052	17640	0	4267
	22	4830	0	3015	7770	0	3093	8820	0	3285	9520	0	3414	11634	0	3809	13916	0	4072	15218	0	4201	17556	0	4444
	24	4760	0	3054	7700	0	3132	8742	0	3350	9436	0	3496	11536	0	3899	13832	0	4228	15134	0	4361	17304	0	4624
(2.5+3.5)+(1.8 +1.8+2.5)	16	5112	0	2938	8094	0	3017	9227	0	3146	9983	0	3232	12155	0	3617	14356	0	3664	15663	0	3764	18077	0	3950
	18	5041	0	2978	8023	0	3057	9139	0	3212	9883	0	3315	12027	0	3708	14285	0	3851	15606	0	3930	18006	0	4137
	20	4970	0	3017	7952	0	3097	9060	0	3263	9798	0	3375	11928	0	3772	14200	0	3970	15265	0	4109	17892	0	4327
	22	4899	0	3057	7881	0	3136	8946	0	3332	9656	0	3462	11800	0	3863	14115	0	4129	15435	0	4260	17807	0	4506
	24	4828	0	3097	7810	0	3176	8866	0	3398	9571	0	3545	11701	0	3954	14030	0	4288	15350	0	4423	17551	0	4689
(1.8+5)+(1.8+ 2.5+2.5)	16	5112	0	2923	8094	0	3002	9227	0	3130	9983	0	3215	12155	0	3598	14356	0	3646	15663	0	3745	18077	0	3930
	18	5041	0	2963	8023	0	3042	9139	0	3196	9883	0	3298	12027	0	3689	14285	0	3832	15606	0	3911	18006	0	4116
	20	4970	0	3002	7952	0	3081	9060	0	3247	9798	0	3358	11928	0	3753	14200	0	3950	15265	0	4088	17892	0	4306
	22	4899	0	3042	7881	0	3121	8946	0	3315	9656	0	3444	11800	0	3843	14115	0	4108	15435	0	4238	17807	0	4483
	24	4828	0	3081	7810	0	3160	8866	0	3380	9571	0	3527	11701	0	3934	14030	0	4266	15350	0	4400	17551	0	4665
(3.5+3.5)+(1.8 +1.8+2.5)	16	5184	0	2967	8208	0	3048	9357	0	3178	10123	0	3264	12326	0	3653	14558	0	3701	15883	0	3801	18331	0	3990
	18	5112	0	3008	8136	0	3088	9268	0	3244	10022	0	3348	12197	0	3745	14486	0	3890	15826	0	3970	18259	0	4178
	20	5040	0	3048	8064	0	3128	9187	0	3296	9936	0	3409	12096	0	3810	14400	0	4010	15480	0	4150	18144	0	4371
	22	4968	0	3088	7992	0	3168	9072	0	3365	9792	0	3497	11966	0	3902	14314	0	4170	15653	0	4303	18058	0	4551
	24	4896	0	3128	7920	0	3208	8991	0	3432	9706	0	3581	11866	0	3994	14227	0	4331	15566	0	4467	17798	0	4736
(1.8+5)+(1.8+ 2.5+3.5)	16	5112	0	2923	8094	0	3002	9227	0	3130	9983	0	3215	12155	0	3598	14356	0	3646	15663	0	3745	18077	0	3930
	18	5041	0	2963	8023	0	3042	9139	0	3196	9883	0	3298	12027	0	3689	14285	0	3832	15606	0	3911	18006	0	4116
	20	4970	0	3002	7952	0	3081	9060	0	3247	9798	0	3358	11928	0	3753	14200	0	3950	15265	0	4088	17892	0	4306
	22	4899	0	3042	7881	0	3121	8946	0	3315	9656	0	3444	11800	0	3843	14115	0	4108	15435	0	4238	17807	0	4483
	24	4828	0	3081	7810	0	3160	8866	0	3380	9571	0	3527	11701	0	3934	14030	0	4266	15350	0	4400	17551	0	4665

EWB : Evaporator Wet Bulb temperature (°C)

EDB : Evaporator Dry Bulb temperature (°C)

(°CDB) : Outdoor Unit Inlet Air Dry Temperature (°C)

TC : Total Capacity (W)

SHC : Sensible Heating Capacity (W)

PI : Power Input

	INDOOR	OUTDOOR TEMPERATURE (°CDW)																							
	EDB	-15			-10			-7			-5			0			7			10			15		
	°C	TC	SHC	PI	TC	SHC	PI	TC	SHC	PI	TC	SHC	PI	TC	SHC	PI	TC	SHC	PI	TC	SHC	PI	TC	SHC	PI
(3.5+3.5)+(1.8+1.8+3.5)	16	5184	0	2967	8208	0	3048	9357	0	3178	10123	0	3264	12326	0	3653	14558	0	3701	15883	0	3801	18331	0	3990
	18	5112	0	3008	8136	0	3088	9268	0	3244	10022	0	3348	12197	0	3745	14486	0	3890	15826	0	3970	18259	0	4178
	20	5040	0	3048	8064	0	3128	9187	0	3296	9936	0	3409	12096	0	3810	14400	0	4010	15480	0	4150	18144	0	4371
	22	4968	0	3088	7992	0	3168	9072	0	3365	9792	0	3497	11966	0	3902	14314	0	4170	15653	0	4303	18058	0	4551
	24	4896	0	3128	7920	0	3208	8991	0	3432	9706	0	3581	11866	0	3994	14227	0	4331	15566	0	4467	17798	0	4736
(2.5+2.5)+(1.8+2.5+2.5)	16	5040	0	2897	7980	0	2975	9097	0	3102	9842	0	3187	11984	0	3567	14154	0	3614	15442	0	3711	17822	0	3895
	18	4970	0	2936	7910	0	3015	9010	0	3167	9744	0	3269	11858	0	3657	14084	0	3798	15386	0	3876	17752	0	4079
	20	4900	0	2975	7840	0	3054	8932	0	3218	9660	0	3328	11760	0	3719	14000	0	3915	15050	0	4052	17640	0	4267
	22	4830	0	3015	7770	0	3093	8820	0	3285	9520	0	3414	11634	0	3809	13916	0	4072	15218	0	4201	17556	0	4444
	24	4760	0	3054	7700	0	3132	8742	0	3350	9436	0	3496	11536	0	3899	13832	0	4228	15134	0	4361	17304	0	4624
(2.5+3.5)+(1.8+2.5+2.5)	16	5112	0	2938	8094	0	3017	9227	0	3146	9983	0	3232	12155	0	3617	14356	0	3664	15663	0	3764	18077	0	3950
	18	5041	0	2978	8023	0	3057	9139	0	3212	9883	0	3315	12027	0	3708	14285	0	3851	15606	0	3930	18006	0	4137
	20	4970	0	3017	7952	0	3097	9060	0	3263	9798	0	3375	11928	0	3772	14200	0	3970	15265	0	4109	17892	0	4327
	22	4899	0	3057	7881	0	3136	8946	0	3332	9656	0	3462	11800	0	3863	14115	0	4129	15435	0	4260	17807	0	4506
	24	4828	0	3097	7810	0	3176	8866	0	3398	9571	0	3545	11701	0	3954	14030	0	4288	15350	0	4423	17551	0	4689
(1.8+5)+(2.5+2.5+2.5)	16	5112	0	2923	8094	0	3002	9227	0	3130	9983	0	3215	12155	0	3598	14356	0	3646	15663	0	3745	18077	0	3930
	18	5041	0	2963	8023	0	3042	9139	0	3196	9883	0	3298	12027	0	3689	14285	0	3832	15606	0	3911	18006	0	4116
	20	4970	0	3002	7952	0	3081	9060	0	3247	9798	0	3358	11928	0	3753	14200	0	3950	15265	0	4088	17892	0	4306
	22	4899	0	3042	7881	0	3121	8946	0	3315	9656	0	3444	11800	0	3843	14115	0	4108	15435	0	4238	17807	0	4483
	24	4828	0	3081	7810	0	3160	8866	0	3380	9571	0	3527	11701	0	3934	14030	0	4266	15350	0	4400	17551	0	4665
(3.5+3.5)+(1.8+2.5+2.5)	16	5184	0	2967	8208	0	3048	9357	0	3178	10123	0	3264	12326	0	3653	14558	0	3701	15883	0	3801	18331	0	3990
	18	5112	0	3008	8136	0	3088	9268	0	3244	10022	0	3348	12197	0	3745	14486	0	3890	15826	0	3970	18259	0	4178
	20	5040	0	3048	8064	0	3128	9187	0	3296	9936	0	3409	12096	0	3810	14400	0	4010	15480	0	4150	18144	0	4371
	22	4968	0	3088	7992	0	3168	9072	0	3365	9792	0	3497	11966	0	3902	14314	0	4170	15653	0	4303	18058	0	4551
	24	4896	0	3128	7920	0	3208	8991	0	3432	9706	0	3581	11866	0	3994	14227	0	4331	15566	0	4467	17798	0	4736
(2.5+5)+(1.8+2.5+3.5)	16	5184	0	2967	8208	0	3048	9357	0	3178	10123	0	3264	12326	0	3653	14558	0	3701	15883	0	3801	18331	0	3990
	18	5112	0	3008	8136	0	3088	9268	0	3244	10022	0	3348	12197	0	3745	14486	0	3890	15826	0	3970	18259	0	4178
	20	5040	0	3048	8064	0	3128	9187	0	3296	9936	0	3409	12096	0	3810	14400	0	4010	15480	0	4150	18144	0	4371
	22	4968	0	3088	7992	0	3168	9072	0	3365	9792	0	3497	11966	0	3902	14314	0	4170	15653	0	4303	18058	0	4551
	24	4896	0	3128	7920	0	3208	8991	0	3432	9706	0	3581	11866	0	3994	14227	0	4331	15566	0	4467	17798	0	4736
(3.5+3.5)+(1.8+2.5+3.5)	16	5184	0	2967	8208	0	3048	9357	0	3178	10123	0	3264	12326	0	3653	14558	0	3701	15883	0	3801	18331	0	3990
	18	5112	0	3008	8136	0	3088	9268	0	3244	10022	0	3348	12197	0	3745	14486	0	3890	15826	0	3970	18259	0	4178
	20	5040	0	3048	8064	0	3128	9187	0	3296	9936	0	3409	12096	0	3810	14400	0	4010	15480	0	4150	18144	0	4371
	22	4968	0	3088	7992	0	3168	9072	0	3365	9792	0	3497	11966	0	3902	14314	0	4170	15653	0	4303	18058	0	4551
	24	4896	0	3128	7920	0	3208	8991	0	3432	9706	0	3581	11866	0	3994	14227	0	4331	15566	0	4467	17798	0	4736
(3.5+3.5)+(1.8+3.5+3.5)	16	5184	0	2967	8208	0	3048	9357	0	3178	10123	0	3264	12326	0	3653	14558	0	3701	15883	0	3801	18331	0	3990
	18	5112	0	3008	8136	0	3088	9268	0	3244	10022	0	3348	12197	0	3745	14486	0	3890	15826	0	3970	18259	0	4178
	20	5040	0	3048	8064	0	3128	9187	0	3296	9936	0	3409	12096	0	3810	14400	0	4010	15480	0	4150	18144	0	4371
	22	4968	0	3088	7992	0	3168	9072	0	3365	9792	0	3497	11966	0	3902	14314	0	4170	15653	0	4303	18058	0	4551
	24	4896	0	3128	7920	0	3208	8991	0	3432	9706	0	3581	11866	0	3994	14227	0	4331	15566	0	4467	17798	0	4736

EWB : Evaporator Wet Bulb temperature (°C)

EDB : Evaporator Dry Bulb temperature (°C)

(°CDB) : Outdoor Unit Inlet Air Dry Temperature (°C)

TC : Total Capacity (W)

SHC : Sensible Heating Capacity (W)

PI : Power Input

	INDOOR	OUTDOOR TEMPERATURE (°CDW)																							
	EDB	-15			-10			-7			-5			0			7			10			15		
	°C	TC	SHC	PI	TC	SHC	PI	TC	SHC	PI	TC	SHC	PI	TC	SHC	PI	TC	SHC	PI	TC	SHC	PI	TC	SHC	PI
(2.5+2.5)+(2.5+2.5+2.5)	16	5040	0	2897	7980	0	2975	9097	0	3102	9842	0	3187	11984	0	3567	14154	0	3614	15442	0	3711	17822	0	3895
	18	4970	0	2936	7910	0	3015	9010	0	3167	9744	0	3269	11858	0	3657	14084	0	3798	15386	0	3876	17752	0	4079
	20	4900	0	2975	7840	0	3054	8932	0	3218	9660	0	3328	11760	0	3719	14000	0	3915	15050	0	4052	17640	0	4267
	22	4830	0	3015	7770	0	3093	8820	0	3285	9520	0	3414	11634	0	3809	13916	0	4072	15218	0	4201	17556	0	4444
	24	4760	0	3054	7700	0	3132	8742	0	3350	9436	0	3496	11536	0	3899	13832	0	4228	15134	0	4361	17304	0	4624
(2.5+3.5)+(2.5+2.5+2.5)	16	5112	0	2938	8094	0	3017	9227	0	3146	9983	0	3232	12155	0	3617	14356	0	3664	15663	0	3764	18077	0	3950
	18	5041	0	2978	8023	0	3057	9139	0	3212	9883	0	3315	12027	0	3708	14285	0	3851	15606	0	3930	18006	0	4137
	20	4970	0	3017	7952	0	3097	9060	0	3263	9798	0	3375	11928	0	3772	14200	0	3970	15265	0	4109	17892	0	4327
	22	4899	0	3057	7881	0	3136	8946	0	3332	9656	0	3462	11800	0	3863	14115	0	4129	15435	0	4260	17807	0	4506
	24	4828	0	3097	7810	0	3176	8866	0	3398	9571	0	3545	11701	0	3954	14030	0	4288	15350	0	4423	17551	0	4689
(2.5+5)+(2.5+2.5+2.5)	16	5184	0	2967	8208	0	3048	9357	0	3178	10123	0	3264	12326	0	3653	14558	0	3701	15883	0	3801	18331	0	3990
	18	5112	0	3008	8136	0	3088	9268	0	3244	10022	0	3348	12197	0	3745	14486	0	3890	15826	0	3970	18259	0	4178
	20	5040	0	3048	8064	0	3128	9187	0	3296	9936	0	3409	12096	0	3810	14400	0	4010	15480	0	4150	18144	0	4371
	22	4968	0	3088	7992	0	3168	9072	0	3365	9792	0	3497	11966	0	3902	14314	0	4170	15653	0	4303	18058	0	4551
	24	4896	0	3128	7920	0	3208	8991	0	3432	9706	0	3581	11866	0	3994	14227	0	4331	15566	0	4467	17798	0	4736
(3.5+3.5)+(2.5+2.5+2.5)	16	5184	0	2967	8208	0	3048	9357	0	3178	10123	0	3264	12326	0	3653	14558	0	3701	15883	0	3801	18331	0	3990
	18	5112	0	3008	8136	0	3088	9268	0	3244	10022	0	3348	12197	0	3745	14486	0	3890	15826	0	3970	18259	0	4178
	20	5040	0	3048	8064	0	3128	9187	0	3296	9936	0	3409	12096	0	3810	14400	0	4010	15480	0	4150	18144	0	4371
	22	4968	0	3088	7992	0	3168	9072	0	3365	9792	0	3497	11966	0	3902	14314	0	4170	15653	0	4303	18058	0	4551
	24	4896	0	3128	7920	0	3208	8991	0	3432	9706	0	3581	11866	0	3994	14227	0	4331	15566	0	4467	17798	0	4736
(2.5+5)+(2.5+2.5+3.5)	16	5184	0	2967	8208	0	3048	9357	0	3178	10123	0	3264	12326	0	3653	14558	0	3701	15883	0	3801	18331	0	3990
	18	5112	0	3008	8136	0	3088	9268	0	3244	10022	0	3348	12197	0	3745	14486	0	3890	15826	0	3970	18259	0	4178
	20	5040	0	3048	8064	0	3128	9187	0	3296	9936	0	3409	12096	0	3810	14400	0	4010	15480	0	4150	18144	0	4371
	22	4968	0	3088	7992	0	3168	9072	0	3365	9792	0	3497	11966	0	3902	14314	0	4170	15653	0	4303	18058	0	4551
	24	4896	0	3128	7920	0	3208	8991	0	3432	9706	0	3581	11866	0	3994	14227	0	4331	15566	0	4467	17798	0	4736
(3.5+3.5)+(2.5+2.5+3.5)	16	5184	0	2967	8208	0	3048	9357	0	3178	10123	0	3264	12326	0	3653	14558	0	3701	15883	0	3801	18331	0	3990
	18	5112	0	3008	8136	0	3088	9268	0	3244	10022	0	3348	12197	0	3745	14486	0	3890	15826	0	3970	18259	0	4178
	20	5040	0	3048	8064	0	3128	9187	0	3296	9936	0	3409	12096	0	3810	14400	0	4010	15480	0	4150	18144	0	4371
	22	4968	0	3088	7992	0	3168	9072	0	3365	9792	0	3497	11966	0	3902	14314	0	4170	15653	0	4303	18058	0	4551
	24	4896	0	3128	7920	0	3208	8991	0	3432	9706	0	3581	11866	0	3994	14227	0	4331	15566	0	4467	17798	0	4736
(3.5+5)+(2.5+2.5+3.5)	16	5184	0	2967	8208	0	3048	9357	0	3178	10123	0	3264	12326	0	3653	14558	0	3701	15883	0	3801	18331	0	3990
	18	5112	0	3008	8136	0	3088	9268	0	3244	10022	0	3348	12197	0	3745	14486	0	3890	15826	0	3970	18259	0	4178
	20	5040	0	3048	8064	0	3128	9187	0	3296	9936	0	3409	12096	0	3810	14400	0	4010	15480	0	4150	18144	0	4371
	22	4968	0	3088	7992	0	3168	9072	0	3365	9792	0	3497	11966	0	3902	14314	0	4170	15653	0	4303	18058	0	4551
	24	4896	0	3128	7920	0	3208	8991	0	3432	9706	0	3581	11866	0	3994	14227	0	4331	15566	0	4467	17798	0	4736
(1.2+1.2+1.2)+(1.2+1.2+1.2)	16	3888	0	2190	6156	0	2250	7018	0	2346	7592	0	2409	9245	0	2697	10919	0	2732	11912	0	2806	13748	0	2945
	18	3834	0	2220	6102	0	2279	6951	0	2395	7517	0	2472	9148	0	2765	10865	0	2871	11869	0	2930	13694	0	3084
	20	3780	0	2250	6048	0	2309	6890	0	2433	7452	0	2516	9072	0	2812	10800	0	2960	11610	0	3064	13608	0	3226
	22	3726	0	2279	5994	0	2338	6804	0	2484	7344	0	2581	8975	0	2880	10735	0	3078	11740	0	3176	13543	0	3360
	24	3672	0	2309	5940	0	2368	6744	0	2533	7279	0	2643	8899	0	2948	10670	0	3197	11675	0	3297	13349	0	3496

EWB : Evaporator Wet Bulb temperature (°C)

EDB : Evaporator Dry Bulb temperature (°C)

(°CDB) : Outdoor Unit Inlet Air Dry Temperature (°C)

TC : Total Capacity (W)

SHC : Sensible Heating Capacity (W)

PI : Power Input

	INDOOR	OUTDOOR TEMPERATURE (°CDW)																							
	EDB	-15			-10			-7			-5			0			7			10			15		
	°C	TC	SHC	PI	TC	SHC	PI	TC	SHC	PI	TC	SHC	PI	TC	SHC	PI	TC	SHC	PI	TC	SHC	PI	TC	SHC	PI
(1.2+1.2+1.2) +(1.2+1.2+1.8)	16	4140	0	2264	6555	0	2326	7473	0	2425	8085	0	2491	9844	0	2788	11627	0	2824	12685	0	2901	14640	0	3045
	18	4083	0	2295	6498	0	2356	7401	0	2476	8004	0	2555	9741	0	2858	11569	0	2968	12639	0	3029	14582	0	3189
	20	4025	0	2326	6440	0	2387	7337	0	2515	7935	0	2601	9660	0	2907	11500	0	3060	12363	0	3167	14490	0	3335
	22	3968	0	2356	6383	0	2417	7245	0	2568	7820	0	2668	9557	0	2977	11431	0	3182	12501	0	3283	14421	0	3473
	24	3910	0	2387	6325	0	2448	7181	0	2619	7751	0	2733	9476	0	3048	11362	0	3305	12432	0	3409	14214	0	3614
(1.2+1.2+1.2) +(1.2+1.2+2.5)	16	4536	0	2501	7182	0	2569	8187	0	2678	8858	0	2751	10786	0	3079	12739	0	3120	13898	0	3204	16040	0	3363
	18	4473	0	2535	7119	0	2603	8109	0	2734	8770	0	2822	10672	0	3157	12676	0	3279	13847	0	3346	15977	0	3522
	20	4410	0	2569	7056	0	2636	8039	0	2778	8694	0	2873	10584	0	3211	12600	0	3380	13545	0	3498	15876	0	3684
	22	4347	0	2603	6993	0	2670	7938	0	2836	8568	0	2947	10471	0	3289	12524	0	3515	13696	0	3627	15800	0	3836
	24	4284	0	2636	6930	0	2704	7867	0	2893	8492	0	3018	10382	0	3366	12449	0	3650	13621	0	3765	15574	0	3992
(1.2+1.2+1.2) +(1.2+1.2+3.5)	16	4536	0	2501	7182	0	2569	8187	0	2678	8858	0	2751	10786	0	3079	12739	0	3120	13898	0	3204	16040	0	3363
	18	4473	0	2535	7119	0	2603	8109	0	2734	8770	0	2822	10672	0	3157	12676	0	3279	13847	0	3346	15977	0	3522
	20	4410	0	2569	7056	0	2636	8039	0	2778	8694	0	2873	10584	0	3211	12600	0	3380	13545	0	3498	15876	0	3684
	22	4347	0	2603	6993	0	2670	7938	0	2836	8568	0	2947	10471	0	3289	12524	0	3515	13696	0	3627	15800	0	3836
	24	4284	0	2636	6930	0	2704	7867	0	2893	8492	0	3018	10382	0	3366	12449	0	3650	13621	0	3765	15574	0	3992
(1.2+1.2+1.2) +(1.2+1.2+5)	16	4536	0	2501	7182	0	2569	8187	0	2678	8858	0	2751	10786	0	3079	12739	0	3120	13898	0	3204	16040	0	3363
	18	4473	0	2535	7119	0	2603	8109	0	2734	8770	0	2822	10672	0	3157	12676	0	3279	13847	0	3346	15977	0	3522
	20	4410	0	2569	7056	0	2636	8039	0	2778	8694	0	2873	10584	0	3211	12600	0	3380	13545	0	3498	15876	0	3684
	22	4347	0	2603	6993	0	2670	7938	0	2836	8568	0	2947	10471	0	3289	12524	0	3515	13696	0	3627	15800	0	3836
	24	4284	0	2636	6930	0	2704	7867	0	2893	8492	0	3018	10382	0	3366	12449	0	3650	13621	0	3765	15574	0	3992
(1.2+1.2+1.2) +(1.2+1.8+1.8)	16	4392	0	2390	6954	0	2455	7928	0	2559	8577	0	2629	10443	0	2943	12334	0	2981	13457	0	3062	15531	0	3214
	18	4331	0	2423	6893	0	2487	7852	0	2613	8491	0	2697	10333	0	3017	12273	0	3133	13408	0	3198	15470	0	3366
	20	4270	0	2455	6832	0	2519	7784	0	2655	8418	0	2746	10248	0	3069	12200	0	3230	13115	0	3343	15372	0	3521
	22	4209	0	2487	6771	0	2552	7686	0	2711	8296	0	2817	10138	0	3143	12127	0	3359	13261	0	3466	15299	0	3666
	24	4148	0	2519	6710	0	2584	7618	0	2764	8223	0	2884	10053	0	3217	12054	0	3488	13188	0	3598	15079	0	3815
(1.2+1.2+1.2) +(1.2+1.8+2.5)	16	4536	0	2501	7182	0	2569	8187	0	2678	8858	0	2751	10786	0	3079	12739	0	3120	13898	0	3204	16040	0	3363
	18	4473	0	2535	7119	0	2603	8109	0	2734	8770	0	2822	10672	0	3157	12676	0	3279	13847	0	3346	15977	0	3522
	20	4410	0	2569	7056	0	2636	8039	0	2778	8694	0	2873	10584	0	3211	12600	0	3380	13545	0	3498	15876	0	3684
	22	4347	0	2603	6993	0	2670	7938	0	2836	8568	0	2947	10471	0	3289	12524	0	3515	13696	0	3627	15800	0	3836
	24	4284	0	2636	6930	0	2704	7867	0	2893	8492	0	3018	10382	0	3366	12449	0	3650	13621	0	3765	15574	0	3992
(1.2+1.2+1.2) +(1.2+1.8+3.5)	16	4536	0	2501	7182	0	2569	8187	0	2678	8858	0	2751	10786	0	3079	12739	0	3120	13898	0	3204	16040	0	3363
	18	4473	0	2535	7119	0	2603	8109	0	2734	8770	0	2822	10672	0	3157	12676	0	3279	13847	0	3346	15977	0	3522
	20	4410	0	2569	7056	0	2636	8039	0	2778	8694	0	2873	10584	0	3211	12600	0	3380	13545	0	3498	15876	0	3684
	22	4347	0	2603	6993	0	2670	7938	0	2836	8568	0	2947	10471	0	3289	12524	0	3515	13696	0	3627	15800	0	3836
	24	4284	0	2636	6930	0	2704	7867	0	2893	8492	0	3018	10382	0	3366	12449	0	3650	13621	0	3765	15574	0	3992
(1.2+1.2+1.2) +(1.2+1.8+5)	16	4536	0	2501	7182	0	2569	8187	0	2678	8858	0	2751	10786	0	3079	12739	0	3120	13898	0	3204	16040	0	3363
	18	4473	0	2535	7119	0	2603	8109	0	2734	8770	0	2822	10672	0	3157	12676	0	3279	13847	0	3346	15977	0	3522
	20	4410	0	2569	7056	0	2636	8039	0	2778	8694	0	2873	10584	0	3211	12600	0	3380	13545	0	3498	15876	0	3684
	22	4347	0	2603	6993	0	2670	7938	0	2836	8568	0	2947	10471	0	3289	12524	0	3515	13696	0	3627	15800	0	3836
	24	4284	0	2636	6930	0	2704	7867	0	2893	8492	0	3018	10382	0	3366	12449	0	3650	13621	0	3765	15574	0	3992

EWB : Evaporator Wet Bulb temperature (°C)

EDB : Evaporator Dry Bulb temperature (°C)

(°CDB) : Outdoor Unit Inlet Air Dry Temperature (°C)

TC : Total Capacity (W)

SHC : Sensible Heating Capacity (W)

PI : Power Input

	INDOOR	OUTDOOR TEMPERATURE (°CDW)																							
	EDB	-15			-10			-7			-5			0			7			10			15		
	°C	TC	SHC	PI	TC	SHC	PI	TC	SHC	PI	TC	SHC	PI	TC	SHC	PI	TC	SHC	PI	TC	SHC	PI	TC	SHC	PI
(1.2+1.2+1.2) +(1.2+2.5+2.5)	16	4536	0	2501	7182	0	2569	8187	0	2678	8858	0	2751	10786	0	3079	12739	0	3120	13898	0	3204	16040	0	3363
	18	4473	0	2535	7119	0	2603	8109	0	2734	8770	0	2822	10672	0	3157	12676	0	3279	13847	0	3346	15977	0	3522
	20	4410	0	2569	7056	0	2636	8039	0	2778	8694	0	2873	10584	0	3211	12600	0	3380	13545	0	3498	15876	0	3684
	22	4347	0	2603	6993	0	2670	7938	0	2836	8568	0	2947	10471	0	3289	12524	0	3515	13696	0	3627	15800	0	3836
	24	4284	0	2636	6930	0	2704	7867	0	2893	8492	0	3018	10382	0	3366	12449	0	3650	13621	0	3765	15574	0	3992
(1.2+1.2+1.2) +(1.2+2.5+3.5)	16	4536	0	2501	7182	0	2569	8187	0	2678	8858	0	2751	10786	0	3079	12739	0	3120	13898	0	3204	16040	0	3363
	18	4473	0	2535	7119	0	2603	8109	0	2734	8770	0	2822	10672	0	3157	12676	0	3279	13847	0	3346	15977	0	3522
	20	4410	0	2569	7056	0	2636	8039	0	2778	8694	0	2873	10584	0	3211	12600	0	3380	13545	0	3498	15876	0	3684
	22	4347	0	2603	6993	0	2670	7938	0	2836	8568	0	2947	10471	0	3289	12524	0	3515	13696	0	3627	15800	0	3836
	24	4284	0	2636	6930	0	2704	7867	0	2893	8492	0	3018	10382	0	3366	12449	0	3650	13621	0	3765	15574	0	3992
(1.2+1.2+1.2) +(1.2+3.5+3.5)	16	4536	0	2501	7182	0	2569	8187	0	2678	8858	0	2751	10786	0	3079	12739	0	3120	13898	0	3204	16040	0	3363
	18	4473	0	2535	7119	0	2603	8109	0	2734	8770	0	2822	10672	0	3157	12676	0	3279	13847	0	3346	15977	0	3522
	20	4410	0	2569	7056	0	2636	8039	0	2778	8694	0	2873	10584	0	3211	12600	0	3380	13545	0	3498	15876	0	3684
	22	4347	0	2603	6993	0	2670	7938	0	2836	8568	0	2947	10471	0	3289	12524	0	3515	13696	0	3627	15800	0	3836
	24	4284	0	2636	6930	0	2704	7867	0	2893	8492	0	3018	10382	0	3366	12449	0	3650	13621	0	3765	15574	0	3992
(1.2+1.2+1.2) +(1.8+1.8+1.8)	16	4464	0	2464	7067	0	2531	8057	0	2639	8716	0	2711	10614	0	3034	12535	0	3074	13676	0	3157	15784	0	3313
	18	4402	0	2498	7005	0	2564	7980	0	2694	8630	0	2781	10502	0	3110	12473	0	3230	13627	0	3297	15722	0	3470
	20	4340	0	2531	6943	0	2597	7911	0	2737	8555	0	2831	10415	0	3164	12399	0	3330	13329	0	3447	15623	0	3630
	22	4278	0	2564	6881	0	2631	7811	0	2795	8431	0	2904	10304	0	3240	12325	0	3463	13478	0	3573	15548	0	3780
	24	4216	0	2597	6819	0	2664	7742	0	2850	8357	0	2974	10217	0	3317	12250	0	3596	13403	0	3710	15325	0	3933
(1.2+1.2+1.2) +(1.8+1.8+2.5)	16	4536	0	2501	7182	0	2569	8187	0	2678	8858	0	2751	10786	0	3079	12739	0	3120	13898	0	3204	16040	0	3363
	18	4473	0	2535	7119	0	2603	8109	0	2734	8770	0	2822	10672	0	3157	12676	0	3279	13847	0	3346	15977	0	3522
	20	4410	0	2569	7056	0	2636	8039	0	2778	8694	0	2873	10584	0	3211	12600	0	3380	13545	0	3498	15876	0	3684
	22	4347	0	2603	6993	0	2670	7938	0	2836	8568	0	2947	10471	0	3289	12524	0	3515	13696	0	3627	15800	0	3836
	24	4284	0	2636	6930	0	2704	7867	0	2893	8492	0	3018	10382	0	3366	12449	0	3650	13621	0	3765	15574	0	3992
(1.2+1.2+1.2) +(1.8+1.8+3.5)	16	4536	0	2501	7182	0	2569	8187	0	2678	8858	0	2751	10786	0	3079	12739	0	3120	13898	0	3204	16040	0	3363
	18	4473	0	2535	7119	0	2603	8109	0	2734	8770	0	2822	10672	0	3157	12676	0	3279	13847	0	3346	15977	0	3522
	20	4410	0	2569	7056	0	2636	8039	0	2778	8694	0	2873	10584	0	3211	12600	0	3380	13545	0	3498	15876	0	3684
	22	4347	0	2603	6993	0	2670	7938	0	2836	8568	0	2947	10471	0	3289	12524	0	3515	13696	0	3627	15800	0	3836
	24	4284	0	2636	6930	0	2704	7867	0	2893	8492	0	3018	10382	0	3366	12449	0	3650	13621	0	3765	15574	0	3992
(1.2+1.2+1.2) +(1.8+1.8+5)	16	4536	0	2501	7182	0	2569	8187	0	2678	8858	0	2751	10786	0	3079	12739	0	3120	13898	0	3204	16040	0	3363
	18	4473	0	2535	7119	0	2603	8109	0	2734	8770	0	2822	10672	0	3157	12676	0	3279	13847	0	3346	15977	0	3522
	20	4410	0	2569	7056	0	2636	8039	0	2778	8694	0	2873	10584	0	3211	12600	0	3380	13545	0	3498	15876	0	3684
	22	4347	0	2603	6993	0	2670	7938	0	2836	8568	0	2947	10471	0	3289	12524	0	3515	13696	0	3627	15800	0	3836
	24	4284	0	2636	6930	0	2704	7867	0	2893	8492	0	3018	10382	0	3366	12449	0	3650	13621	0	3765	15574	0	3992
(1.2+1.2+1.2) +(1.8+2.5+2.5)	16	4536	0	2501	7182	0	2569	8187	0	2678	8858	0	2751	10786	0	3079	12739	0	3120	13898	0	3204	16040	0	3363
	18	4473	0	2535	7119	0	2603	8109	0	2734	8770	0	2822	10672	0	3157	12676	0	3279	13847	0	3346	15977	0	3522
	20	4410	0	2569	7056	0	2636	8039	0	2778	8694	0	2873	10584	0	3211	12600	0	3380	13545	0	3498	15876	0	3684
	22	4347	0	2603	6993	0	2670	7938	0	2836	8568	0	2947	10471	0	3289	12524	0	3515	13696	0	3627	15800	0	3836
	24	4284	0	2636	6930	0	2704	7867	0	2893	8492	0	3018	10382	0	3366	12449	0	3650	13621	0	3765	15574	0	3992

EWB : Evaporator Wet Bulb temperature (°C)

EDB : Evaporator Dry Bulb temperature (°C)

(°CDB) : Outdoor Unit Inlet Air Dry Temperature (°C)

TC : Total Capacity (W)

SHC : Sensible Heating Capacity (W)

PI : Power Input

	INDOOR	OUTDOOR TEMPERATURE (°CDW)																							
	EDB	-15			-10			-7			-5			0			7			10			15		
	°C	TC	SHC	PI	TC	SHC	PI	TC	SHC	PI	TC	SHC	PI	TC	SHC	PI	TC	SHC	PI	TC	SHC	PI	TC	SHC	PI
(1.2+1.2+1.2) +(1.8+2.5+3.5)	16	4536	0	2501	7182	0	2569	8187	0	2678	8858	0	2751	10786	0	3079	12739	0	3120	13898	0	3204	16040	0	3363
	18	4473	0	2535	7119	0	2603	8109	0	2734	8770	0	2822	10672	0	3157	12676	0	3279	13847	0	3346	15977	0	3522
	20	4410	0	2569	7056	0	2636	8039	0	2778	8694	0	2873	10584	0	3211	12600	0	3380	13545	0	3498	15876	0	3684
	22	4347	0	2603	6993	0	2670	7938	0	2836	8568	0	2947	10471	0	3289	12524	0	3515	13696	0	3627	15800	0	3836
	24	4284	0	2636	6930	0	2704	7867	0	2893	8492	0	3018	10382	0	3366	12449	0	3650	13621	0	3765	15574	0	3992
(1.2+1.2+1.2) +(1.8+3.5+3.5)	16	4536	0	2501	7182	0	2569	8187	0	2678	8858	0	2751	10786	0	3079	12739	0	3120	13898	0	3204	16040	0	3363
	18	4473	0	2535	7119	0	2603	8109	0	2734	8770	0	2822	10672	0	3157	12676	0	3279	13847	0	3346	15977	0	3522
	20	4410	0	2569	7056	0	2636	8039	0	2778	8694	0	2873	10584	0	3211	12600	0	3380	13545	0	3498	15876	0	3684
	22	4347	0	2603	6993	0	2670	7938	0	2836	8568	0	2947	10471	0	3289	12524	0	3515	13696	0	3627	15800	0	3836
	24	4284	0	2636	6930	0	2704	7867	0	2893	8492	0	3018	10382	0	3366	12449	0	3650	13621	0	3765	15574	0	3992
(1.2+1.2+1.2) +(2.5+2.5+2.5)	16	4536	0	2501	7182	0	2569	8187	0	2678	8858	0	2751	10786	0	3079	12739	0	3120	13898	0	3204	16040	0	3363
	18	4473	0	2535	7119	0	2603	8109	0	2734	8770	0	2822	10672	0	3157	12676	0	3279	13847	0	3346	15977	0	3522
	20	4410	0	2569	7056	0	2636	8039	0	2778	8694	0	2873	10584	0	3211	12600	0	3380	13545	0	3498	15876	0	3684
	22	4347	0	2603	6993	0	2670	7938	0	2836	8568	0	2947	10471	0	3289	12524	0	3515	13696	0	3627	15800	0	3836
	24	4284	0	2636	6930	0	2704	7867	0	2893	8492	0	3018	10382	0	3366	12449	0	3650	13621	0	3765	15574	0	3992
(1.2+1.2+1.2) +(2.5+2.5+3.5)	16	4536	0	2501	7182	0	2569	8187	0	2678	8858	0	2751	10786	0	3079	12739	0	3120	13898	0	3204	16040	0	3363
	18	4473	0	2535	7119	0	2603	8109	0	2734	8770	0	2822	10672	0	3157	12676	0	3279	13847	0	3346	15977	0	3522
	20	4410	0	2569	7056	0	2636	8039	0	2778	8694	0	2873	10584	0	3211	12600	0	3380	13545	0	3498	15876	0	3684
	22	4347	0	2603	6993	0	2670	7938	0	2836	8568	0	2947	10471	0	3289	12524	0	3515	13696	0	3627	15800	0	3836
	24	4284	0	2636	6930	0	2704	7867	0	2893	8492	0	3018	10382	0	3366	12449	0	3650	13621	0	3765	15574	0	3992
(1.2+1.2+1.8) +(1.2+1.2+1.2)	16	4140	0	2264	6555	0	2326	7473	0	2425	8085	0	2491	9844	0	2788	11627	0	2824	12685	0	2901	14640	0	3045
	18	4083	0	2295	6498	0	2356	7401	0	2476	8004	0	2555	9741	0	2858	11569	0	2968	12639	0	3029	14582	0	3189
	20	4025	0	2326	6440	0	2387	7337	0	2515	7935	0	2601	9660	0	2907	11500	0	3060	12363	0	3167	14490	0	3335
	22	3968	0	2356	6383	0	2417	7245	0	2568	7820	0	2668	9557	0	2977	11431	0	3182	12501	0	3283	14421	0	3473
	24	3910	0	2387	6325	0	2448	7181	0	2619	7751	0	2733	9476	0	3048	11362	0	3305	12432	0	3409	14214	0	3614
(1.2+1.2+1.8) +(1.2+1.2+1.8)	16	4392	0	2338	6954	0	2402	7928	0	2504	8577	0	2572	10443	0	2879	12334	0	2917	13457	0	2996	15531	0	3144
	18	4331	0	2370	6893	0	2433	7852	0	2556	8491	0	2639	10333	0	2951	12273	0	3065	13408	0	3128	15470	0	3293
	20	4270	0	2402	6832	0	2465	7784	0	2598	8418	0	2686	10248	0	3002	12200	0	3160	13115	0	3271	15372	0	3444
	22	4209	0	2433	6771	0	2496	7686	0	2652	8296	0	2756	10138	0	3075	12127	0	3286	13261	0	3391	15299	0	3587
	24	4148	0	2465	6710	0	2528	7618	0	2704	8223	0	2822	10053	0	3147	12054	0	3413	13188	0	3520	15079	0	3732
(1.2+1.2+1.8) +(1.2+1.2+2.5)	16	4788	0	2575	7581	0	2645	8642	0	2758	9350	0	2833	11385	0	3170	13446	0	3212	14670	0	3299	16931	0	3463
	18	4722	0	2610	7515	0	2680	8560	0	2815	9257	0	2906	11265	0	3250	13380	0	3376	14617	0	3445	16864	0	3626
	20	4655	0	2645	7448	0	2714	8485	0	2861	9177	0	2958	11172	0	3306	13300	0	3480	14298	0	3602	16758	0	3793
	22	4589	0	2680	7382	0	2749	8379	0	2920	9044	0	3035	11052	0	3386	13220	0	3619	14457	0	3734	16678	0	3950
	24	4522	0	2714	7315	0	2784	8305	0	2978	8964	0	3108	10959	0	3466	13140	0	3758	14377	0	3877	16439	0	4110
(1.2+1.2+1.8) +(1.2+1.2+3.5)	16	4788	0	2575	7581	0	2645	8642	0	2758	9350	0	2833	11385	0	3170	13446	0	3212	14670	0	3299	16931	0	3463
	18	4722	0	2610	7515	0	2680	8560	0	2815	9257	0	2906	11265	0	3250	13380	0	3376	14617	0	3445	16864	0	3626
	20	4655	0	2645	7448	0	2714	8485	0	2861	9177	0	2958	11172	0	3306	13300	0	3480	14298	0	3602	16758	0	3793
	22	4589	0	2680	7382	0	2749	8379	0	2920	9044	0	3035	11052	0	3386	13220	0	3619	14457	0	3734	16678	0	3950
	24	4522	0	2714	7315	0	2784	8305	0	2978	8964	0	3108	10959	0	3466	13140	0	3758	14377	0	3877	16439	0	4110

EWB : Evaporator Wet Bulb temperature (°C)

EDB : Evaporator Dry Bulb temperature (°C)

(°CDB) : Outdoor Unit Inlet Air Dry Temperature (°C)

TC : Total Capacity (W)

SHC : Sensible Heating Capacity (W)

PI : Power Input

	INDOOR	OUTDOOR TEMPERATURE (°CDW)																							
	EDB	-15			-10			-7			-5			0			7			10			15		
	°C	TC	SHC	PI	TC	SHC	PI	TC	SHC	PI	TC	SHC	PI	TC	SHC	PI	TC	SHC	PI	TC	SHC	PI	TC	SHC	PI
(1.2+1.2+1.8) +(1.2+1.2+5)	16	4788	0	2575	7581	0	2645	8642	0	2758	9350	0	2833	11385	0	3170	13446	0	3212	14670	0	3299	16931	0	3463
	18	4722	0	2610	7515	0	2680	8560	0	2815	9257	0	2906	11265	0	3250	13380	0	3376	14617	0	3445	16864	0	3626
	20	4655	0	2645	7448	0	2714	8485	0	2861	9177	0	2958	11172	0	3306	13300	0	3480	14298	0	3602	16758	0	3793
	22	4589	0	2680	7382	0	2749	8379	0	2920	9044	0	3035	11052	0	3386	13220	0	3619	14457	0	3734	16678	0	3950
	24	4522	0	2714	7315	0	2784	8305	0	2978	8964	0	3108	10959	0	3466	13140	0	3758	14377	0	3877	16439	0	4110
(1.2+1.2+1.8) +(1.2+1.8+1.8)	16	4644	0	2464	7353	0	2531	8382	0	2639	9069	0	2711	11042	0	3034	13042	0	3074	14229	0	3157	16422	0	3313
	18	4580	0	2498	7289	0	2564	8302	0	2694	8978	0	2781	10926	0	3110	12977	0	3230	14177	0	3297	16357	0	3470
	20	4515	0	2531	7224	0	2597	8230	0	2737	8901	0	2831	10836	0	3164	12900	0	3330	13868	0	3447	16254	0	3630
	22	4451	0	2564	7160	0	2631	8127	0	2795	8772	0	2904	10720	0	3240	12823	0	3463	14022	0	3573	16177	0	3780
	24	4386	0	2597	7095	0	2664	8055	0	2850	8695	0	2974	10630	0	3317	12745	0	3596	13945	0	3710	15944	0	3933
(1.2+1.2+1.8) +(1.2+1.8+2.5)	16	4788	0	2575	7581	0	2645	8642	0	2758	9350	0	2833	11385	0	3170	13446	0	3212	14670	0	3299	16931	0	3463
	18	4722	0	2610	7515	0	2680	8560	0	2815	9257	0	2906	11265	0	3250	13380	0	3376	14617	0	3445	16864	0	3626
	20	4655	0	2645	7448	0	2714	8485	0	2861	9177	0	2958	11172	0	3306	13300	0	3480	14298	0	3602	16758	0	3793
	22	4589	0	2680	7382	0	2749	8379	0	2920	9044	0	3035	11052	0	3386	13220	0	3619	14457	0	3734	16678	0	3950
	24	4522	0	2714	7315	0	2784	8305	0	2978	8964	0	3108	10959	0	3466	13140	0	3758	14377	0	3877	16439	0	4110
(1.2+1.2+1.8) +(1.2+1.8+3.5)	16	4788	0	2575	7581	0	2645	8642	0	2758	9350	0	2833	11385	0	3170	13446	0	3212	14670	0	3299	16931	0	3463
	18	4722	0	2610	7515	0	2680	8560	0	2815	9257	0	2906	11265	0	3250	13380	0	3376	14617	0	3445	16864	0	3626
	20	4655	0	2645	7448	0	2714	8485	0	2861	9177	0	2958	11172	0	3306	13300	0	3480	14298	0	3602	16758	0	3793
	22	4589	0	2680	7382	0	2749	8379	0	2920	9044	0	3035	11052	0	3386	13220	0	3619	14457	0	3734	16678	0	3950
	24	4522	0	2714	7315	0	2784	8305	0	2978	8964	0	3108	10959	0	3466	13140	0	3758	14377	0	3877	16439	0	4110
(1.2+1.2+1.8) +(1.2+1.8+5)	16	4788	0	2575	7581	0	2645	8642	0	2758	9350	0	2833	11385	0	3170	13446	0	3212	14670	0	3299	16931	0	3463
	18	4722	0	2610	7515	0	2680	8560	0	2815	9257	0	2906	11265	0	3250	13380	0	3376	14617	0	3445	16864	0	3626
	20	4655	0	2645	7448	0	2714	8485	0	2861	9177	0	2958	11172	0	3306	13300	0	3480	14298	0	3602	16758	0	3793
	22	4589	0	2680	7382	0	2749	8379	0	2920	9044	0	3035	11052	0	3386	13220	0	3619	14457	0	3734	16678	0	3950
	24	4522	0	2714	7315	0	2784	8305	0	2978	8964	0	3108	10959	0	3466	13140	0	3758	14377	0	3877	16439	0	4110
(1.2+1.2+1.8) +(1.2+2.5+2.5)	16	4788	0	2575	7581	0	2645	8642	0	2758	9350	0	2833	11385	0	3170	13446	0	3212	14670	0	3299	16931	0	3463
	18	4722	0	2610	7515	0	2680	8560	0	2815	9257	0	2906	11265	0	3250	13380	0	3376	14617	0	3445	16864	0	3626
	20	4655	0	2645	7448	0	2714	8485	0	2861	9177	0	2958	11172	0	3306	13300	0	3480	14298	0	3602	16758	0	3793
	22	4589	0	2680	7382	0	2749	8379	0	2920	9044	0	3035	11052	0	3386	13220	0	3619	14457	0	3734	16678	0	3950
	24	4522	0	2714	7315	0	2784	8305	0	2978	8964	0	3108	10959	0	3466	13140	0	3758	14377	0	3877	16439	0	4110
(1.2+1.2+1.8) +(1.2+2.5+3.5)	16	4788	0	2575	7581	0	2645	8642	0	2758	9350	0	2833	11385	0	3170	13446	0	3212	14670	0	3299	16931	0	3463
	18	4722	0	2610	7515	0	2680	8560	0	2815	9257	0	2906	11265	0	3250	13380	0	3376	14617	0	3445	16864	0	3626
	20	4655	0	2645	7448	0	2714	8485	0	2861	9177	0	2958	11172	0	3306	13300	0	3480	14298	0	3602	16758	0	3793
	22	4589	0	2680	7382	0	2749	8379	0	2920	9044	0	3035	11052	0	3386	13220	0	3619	14457	0	3734	16678	0	3950
	24	4522	0	2714	7315	0	2784	8305	0	2978	8964	0	3108	10959	0	3466	13140	0	3758	14377	0	3877	16439	0	4110
(1.2+1.2+1.8) +(1.2+3.5+3.5)	16	4788	0	2575	7581	0	2645	8642	0	2758	9350	0	2833	11385	0	3170	13446	0	3212	14670	0	3299	16931	0	3463
	18	4722	0	2610	7515	0	2680	8560	0	2815	9257	0	2906	11265	0	3250	13380	0	3376	14617	0	3445	16864	0	3626
	20	4655	0	2645	7448	0	2714	8485	0	2861	9177	0	2958	11172	0	3306	13300	0	3480	14298	0	3602	16758	0	3793
	22	4589	0	2680	7382	0	2749	8379	0	2920	9044	0	3035	11052	0	3386	13220	0	3619	14457	0	3734	16678	0	3950
	24	4522	0	2714	7315	0	2784	8305	0	2978	8964	0	3108	10959	0	3466	13140	0	3758	14377	0	3877	16439	0	4110

EWB : Evaporator Wet Bulb temperature (°C)

EDB : Evaporator Dry Bulb temperature (°C)

(°CDB) : Outdoor Unit Inlet Air Dry Temperature (°C)

TC : Total Capacity (W)

SHC : Sensible Heating Capacity (W)

PI : Power Input

	INDOOR	OUTDOOR TEMPERATURE (°CDW)																							
	EDB	-15			-10			-7			-5			0			7			10			15		
	°C	TC	SHC	PI	TC	SHC	PI	TC	SHC	PI	TC	SHC	PI	TC	SHC	PI	TC	SHC	PI	TC	SHC	PI	TC	SHC	PI
(1.2+1.2+1.8) +(1.8+1.8+1.8)	16	4716	0	2538	7466	0	2607	8512	0	2718	9209	0	2792	11213	0	3125	13243	0	3166	14448	0	3252	16675	0	3413
	18	4650	0	2573	7401	0	2641	8431	0	2775	9117	0	2864	11095	0	3204	13178	0	3327	14396	0	3396	16610	0	3574
	20	4585	0	2607	7335	0	2675	8357	0	2819	9038	0	2916	11003	0	3259	13099	0	3430	14081	0	3550	16505	0	3739
	22	4519	0	2641	7270	0	2710	8252	0	2878	8907	0	2991	10885	0	3337	13020	0	3567	14239	0	3680	16426	0	3893
	24	4454	0	2675	7204	0	2744	8179	0	2935	8829	0	3063	10794	0	3416	12942	0	3704	14160	0	3821	16190	0	4051
(1.2+1.2+1.8) +(1.8+1.8+2.5)	16	4788	0	2575	7581	0	2645	8642	0	2758	9350	0	2833	11385	0	3170	13446	0	3212	14670	0	3299	16931	0	3463
	18	4722	0	2610	7515	0	2680	8560	0	2815	9257	0	2906	11265	0	3250	13380	0	3376	14617	0	3445	16864	0	3626
	20	4655	0	2645	7448	0	2714	8485	0	2861	9177	0	2958	11172	0	3306	13300	0	3480	14298	0	3602	16758	0	3793
	22	4589	0	2680	7382	0	2749	8379	0	2920	9044	0	3035	11052	0	3386	13220	0	3619	14457	0	3734	16678	0	3950
	24	4522	0	2714	7315	0	2784	8305	0	2978	8964	0	3108	10959	0	3466	13140	0	3758	14377	0	3877	16439	0	4110
(1.2+1.2+1.8) +(1.8+1.8+3.5)	16	4788	0	2575	7581	0	2645	8642	0	2758	9350	0	2833	11385	0	3170	13446	0	3212	14670	0	3299	16931	0	3463
	18	4722	0	2610	7515	0	2680	8560	0	2815	9257	0	2906	11265	0	3250	13380	0	3376	14617	0	3445	16864	0	3626
	20	4655	0	2645	7448	0	2714	8485	0	2861	9177	0	2958	11172	0	3306	13300	0	3480	14298	0	3602	16758	0	3793
	22	4589	0	2680	7382	0	2749	8379	0	2920	9044	0	3035	11052	0	3386	13220	0	3619	14457	0	3734	16678	0	3950
	24	4522	0	2714	7315	0	2784	8305	0	2978	8964	0	3108	10959	0	3466	13140	0	3758	14377	0	3877	16439	0	4110
(1.2+1.2+1.8) +(1.8+1.8+5)	16	4788	0	2575	7581	0	2645	8642	0	2758	9350	0	2833	11385	0	3170	13446	0	3212	14670	0	3299	16931	0	3463
	18	4722	0	2610	7515	0	2680	8560	0	2815	9257	0	2906	11265	0	3250	13380	0	3376	14617	0	3445	16864	0	3626
	20	4655	0	2645	7448	0	2714	8485	0	2861	9177	0	2958	11172	0	3306	13300	0	3480	14298	0	3602	16758	0	3793
	22	4589	0	2680	7382	0	2749	8379	0	2920	9044	0	3035	11052	0	3386	13220	0	3619	14457	0	3734	16678	0	3950
	24	4522	0	2714	7315	0	2784	8305	0	2978	8964	0	3108	10959	0	3466	13140	0	3758	14377	0	3877	16439	0	4110
(1.2+1.2+1.8) +(1.8+2.5+2.5)	16	4788	0	2575	7581	0	2645	8642	0	2758	9350	0	2833	11385	0	3170	13446	0	3212	14670	0	3299	16931	0	3463
	18	4722	0	2610	7515	0	2680	8560	0	2815	9257	0	2906	11265	0	3250	13380	0	3376	14617	0	3445	16864	0	3626
	20	4655	0	2645	7448	0	2714	8485	0	2861	9177	0	2958	11172	0	3306	13300	0	3480	14298	0	3602	16758	0	3793
	22	4589	0	2680	7382	0	2749	8379	0	2920	9044	0	3035	11052	0	3386	13220	0	3619	14457	0	3734	16678	0	3950
	24	4522	0	2714	7315	0	2784	8305	0	2978	8964	0	3108	10959	0	3466	13140	0	3758	14377	0	3877	16439	0	4110
(1.2+1.2+1.8) +(1.8+2.5+3.5)	16	4788	0	2575	7581	0	2645	8642	0	2758	9350	0	2833	11385	0	3170	13446	0	3212	14670	0	3299	16931	0	3463
	18	4722	0	2610	7515	0	2680	8560	0	2815	9257	0	2906	11265	0	3250	13380	0	3376	14617	0	3445	16864	0	3626
	20	4655	0	2645	7448	0	2714	8485	0	2861	9177	0	2958	11172	0	3306	13300	0	3480	14298	0	3602	16758	0	3793
	22	4589	0	2680	7382	0	2749	8379	0	2920	9044	0	3035	11052	0	3386	13220	0	3619	14457	0	3734	16678	0	3950
	24	4522	0	2714	7315	0	2784	8305	0	2978	8964	0	3108	10959	0	3466	13140	0	3758	14377	0	3877	16439	0	4110
(1.2+1.2+1.8) +(1.8+3.5+3.5)	16	4788	0	2575	7581	0	2645	8642	0	2758	9350	0	2833	11385	0	3170	13446	0	3212	14670	0	3299	16931	0	3463
	18	4722	0	2610	7515	0	2680	8560	0	2815	9257	0	2906	11265	0	3250	13380	0	3376	14617	0	3445	16864	0	3626
	20	4655	0	2645	7448	0	2714	8485	0	2861	9177	0	2958	11172	0	3306	13300	0	3480	14298	0	3602	16758	0	3793
	22	4589	0	2680	7382	0	2749	8379	0	2920	9044	0	3035	11052	0	3386	13220	0	3619	14457	0	3734	16678	0	3950
	24	4522	0	2714	7315	0	2784	8305	0	2978	8964	0	3108	10959	0	3466	13140	0	3758	14377	0	3877	16439	0	4110
(1.2+1.2+1.8) +(2.5+2.5+2.5)	16	4788	0	2575	7581	0	2645	8642	0	2758	9350	0	2833	11385	0	3170	13446	0	3212	14670	0	3299	16931	0	3463
	18	4722	0	2610	7515	0	2680	8560	0	2815	9257	0	2906	11265	0	3250	13380	0	3376	14617	0	3445	16864	0	3626
	20	4655	0	2645	7448	0	2714	8485	0	2861	9177	0	2958	11172	0	3306	13300	0	3480	14298	0	3602	16758	0	3793
	22	4589	0	2680	7382	0	2749	8379	0	2920	9044	0	3035	11052	0	3386	13220	0	3619	14457	0	3734	16678	0	3950
	24	4522	0	2714	7315	0	2784	8305	0	2978	8964	0	3108	10959	0	3466	13140	0	3758	14377	0	3877	16439	0	4110

EWB : Evaporator Wet Bulb temperature (°C)

EDB : Evaporator Dry Bulb temperature (°C)

(°CDB) : Outdoor Unit Inlet Air Dry Temperature (°C)

TC : Total Capacity (W)

SHC : Sensible Heating Capacity (W)

PI : Power Input

	INDOOR	OUTDOOR TEMPERATURE (°CDW)																							
	EDB	-15			-10			-7			-5			0			7			10			15		
	°C	TC	SHC	PI	TC	SHC	PI	TC	SHC	PI	TC	SHC	PI	TC	SHC	PI	TC	SHC	PI	TC	SHC	PI	TC	SHC	PI
(1.2+1.2+1.8) +(2.5+2.5+3.5)	16	4788	0	2575	7581	0	2645	8642	0	2758	9350	0	2833	11385	0	3170	13446	0	3212	14670	0	3299	16931	0	3463
	18	4722	0	2610	7515	0	2680	8560	0	2815	9257	0	2906	11265	0	3250	13380	0	3376	14617	0	3445	16864	0	3626
	20	4655	0	2645	7448	0	2714	8485	0	2861	9177	0	2958	11172	0	3306	13300	0	3480	14298	0	3602	16758	0	3793
	22	4589	0	2680	7382	0	2749	8379	0	2920	9044	0	3035	11052	0	3386	13220	0	3619	14457	0	3734	16678	0	3950
	24	4522	0	2714	7315	0	2784	8305	0	2978	8964	0	3108	10959	0	3466	13140	0	3758	14377	0	3877	16439	0	4110
(1.2+1.2+2.5) +(1.2+1.2+1.2)	16	4536	0	2501	7182	0	2569	8187	0	2678	8858	0	2751	10786	0	3079	12739	0	3120	13898	0	3204	16040	0	3363
	18	4473	0	2535	7119	0	2603	8109	0	2734	8770	0	2822	10672	0	3157	12676	0	3279	13847	0	3346	15977	0	3522
	20	4410	0	2569	7056	0	2636	8039	0	2778	8694	0	2873	10584	0	3211	12600	0	3380	13545	0	3498	15876	0	3684
	22	4347	0	2603	6993	0	2670	7938	0	2836	8568	0	2947	10471	0	3289	12524	0	3515	13696	0	3627	15800	0	3836
	24	4284	0	2636	6930	0	2704	7867	0	2893	8492	0	3018	10382	0	3366	12449	0	3650	13621	0	3765	15574	0	3992
(1.2+1.2+2.5) +(1.2+1.2+1.8)	16	4788	0	2575	7581	0	2645	8642	0	2758	9350	0	2833	11385	0	3170	13446	0	3212	14670	0	3299	16931	0	3463
	18	4722	0	2610	7515	0	2680	8560	0	2815	9257	0	2906	11265	0	3250	13380	0	3376	14617	0	3445	16864	0	3626
	20	4655	0	2645	7448	0	2714	8485	0	2861	9177	0	2958	11172	0	3306	13300	0	3480	14298	0	3602	16758	0	3793
	22	4589	0	2680	7382	0	2749	8379	0	2920	9044	0	3035	11052	0	3386	13220	0	3619	14457	0	3734	16678	0	3950
	24	4522	0	2714	7315	0	2784	8305	0	2978	8964	0	3108	10959	0	3466	13140	0	3758	14377	0	3877	16439	0	4110
(1.2+1.2+2.5) +(1.2+1.2+2.5)	16	5184	0	2812	8208	0	2888	9357	0	3011	10123	0	3093	12326	0	3462	14558	0	3507	15883	0	3602	18331	0	3781
	18	5112	0	2850	8136	0	2926	9268	0	3074	10022	0	3173	12197	0	3549	14486	0	3686	15826	0	3762	18259	0	3960
	20	5040	0	2888	8064	0	2964	9187	0	3124	9936	0	3230	12096	0	3610	14400	0	3800	15480	0	3933	18144	0	4142
	22	4968	0	2926	7992	0	3002	9072	0	3189	9792	0	3314	11966	0	3697	14314	0	3952	15653	0	4077	18058	0	4313
	24	4896	0	2964	7920	0	3040	8991	0	3252	9706	0	3393	11866	0	3785	14227	0	4104	15566	0	4233	17798	0	4488
(1.2+1.2+2.5) +(1.2+1.2+3.5)	16	5184	0	2812	8208	0	2888	9357	0	3011	10123	0	3093	12326	0	3462	14558	0	3507	15883	0	3602	18331	0	3781
	18	5112	0	2850	8136	0	2926	9268	0	3074	10022	0	3173	12197	0	3549	14486	0	3686	15826	0	3762	18259	0	3960
	20	5040	0	2888	8064	0	2964	9187	0	3124	9936	0	3230	12096	0	3610	14400	0	3800	15480	0	3933	18144	0	4142
	22	4968	0	2926	7992	0	3002	9072	0	3189	9792	0	3314	11966	0	3697	14314	0	3952	15653	0	4077	18058	0	4313
	24	4896	0	2964	7920	0	3040	8991	0	3252	9706	0	3393	11866	0	3785	14227	0	4104	15566	0	4233	17798	0	4488
(1.2+1.2+2.5) +(1.2+1.2+5)	16	5184	0	2812	8208	0	2888	9357	0	3011	10123	0	3093	12326	0	3462	14558	0	3507	15883	0	3602	18331	0	3781
	18	5112	0	2850	8136	0	2926	9268	0	3074	10022	0	3173	12197	0	3549	14486	0	3686	15826	0	3762	18259	0	3960
	20	5040	0	2888	8064	0	2964	9187	0	3124	9936	0	3230	12096	0	3610	14400	0	3800	15480	0	3933	18144	0	4142
	22	4968	0	2926	7992	0	3002	9072	0	3189	9792	0	3314	11966	0	3697	14314	0	3952	15653	0	4077	18058	0	4313
	24	4896	0	2964	7920	0	3040	8991	0	3252	9706	0	3393	11866	0	3785	14227	0	4104	15566	0	4233	17798	0	4488
(1.2+1.2+2.5) +(1.2+1.8+1.8)	16	5040	0	2701	7980	0	2774	9097	0	2892	9842	0	2971	11984	0	3325	14154	0	3369	15442	0	3460	17822	0	3632
	18	4970	0	2738	7910	0	2811	9010	0	2953	9744	0	3048	11858	0	3409	14084	0	3541	15386	0	3614	17752	0	3803
	20	4900	0	2774	7840	0	2847	8932	0	3000	9660	0	3103	11760	0	3468	14000	0	3650	15050	0	3778	17640	0	3979
	22	4830	0	2811	7770	0	2884	8820	0	3063	9520	0	3183	11634	0	3551	13916	0	3796	15218	0	3916	17556	0	4143
	24	4760	0	2847	7700	0	2920	8742	0	3124	9436	0	3259	11536	0	3635	13832	0	3942	15134	0	4066	17304	0	4311
(1.2+1.2+2.5) +(1.2+1.8+2.5)	16	5184	0	2812	8208	0	2888	9357	0	3011	10123	0	3093	12326	0	3462	14558	0	3507	15883	0	3602	18331	0	3781
	18	5112	0	2850	8136	0	2926	9268	0	3074	10022	0	3173	12197	0	3549	14486	0	3686	15826	0	3762	18259	0	3960
	20	5040	0	2888	8064	0	2964	9187	0	3124	9936	0	3230	12096	0	3610	14400	0	3800	15480	0	3933	18144	0	4142
	22	4968	0	2926	7992	0	3002	9072	0	3189	9792	0	3314	11966	0	3697	14314	0	3952	15653	0	4077	18058	0	4313
	24	4896	0	2964	7920	0	3040	8991	0	3252	9706	0	3393	11866	0	3785	14227	0	4104	15566	0	4233	17798	0	4488

EWB : Evaporator Wet Bulb temperature (°C)

EDB : Evaporator Dry Bulb temperature (°C)

(°CDB) : Outdoor Unit Inlet Air Dry Temperature (°C)

TC : Total Capacity (W)

SHC : Sensible Heating Capacity (W)

PI : Power Input

	INDOOR	OUTDOOR TEMPERATURE (°CDW)																							
	EDB	-15			-10			-7			-5			0			7			10			15		
	°C	TC	SHC	PI	TC	SHC	PI	TC	SHC	PI	TC	SHC	PI	TC	SHC	PI	TC	SHC	PI	TC	SHC	PI	TC	SHC	PI
(1.2+1.2+2.5) +(1.2+1.8+3.5)	16	5184	0	2812	8208	0	2888	9357	0	3011	10123	0	3093	12326	0	3462	14558	0	3507	15883	0	3602	18331	0	3781
	18	5112	0	2850	8136	0	2926	9268	0	3074	10022	0	3173	12197	0	3549	14486	0	3686	15826	0	3762	18259	0	3960
	20	5040	0	2888	8064	0	2964	9187	0	3124	9936	0	3230	12096	0	3610	14400	0	3800	15480	0	3933	18144	0	4142
	22	4968	0	2926	7992	0	3002	9072	0	3189	9792	0	3314	11966	0	3697	14314	0	3952	15653	0	4077	18058	0	4313
	24	4896	0	2964	7920	0	3040	8991	0	3252	9706	0	3393	11866	0	3785	14227	0	4104	15566	0	4233	17798	0	4488
(1.2+1.2+2.5) +(1.2+1.8+5)	16	5184	0	2812	8208	0	2888	9357	0	3011	10123	0	3093	12326	0	3462	14558	0	3507	15883	0	3602	18331	0	3781
	18	5112	0	2850	8136	0	2926	9268	0	3074	10022	0	3173	12197	0	3549	14486	0	3686	15826	0	3762	18259	0	3960
	20	5040	0	2888	8064	0	2964	9187	0	3124	9936	0	3230	12096	0	3610	14400	0	3800	15480	0	3933	18144	0	4142
	22	4968	0	2926	7992	0	3002	9072	0	3189	9792	0	3314	11966	0	3697	14314	0	3952	15653	0	4077	18058	0	4313
	24	4896	0	2964	7920	0	3040	8991	0	3252	9706	0	3393	11866	0	3785	14227	0	4104	15566	0	4233	17798	0	4488
(1.2+1.2+2.5) +(1.2+2.5+2.5)	16	5184	0	2812	8208	0	2888	9357	0	3011	10123	0	3093	12326	0	3462	14558	0	3507	15883	0	3602	18331	0	3781
	18	5112	0	2850	8136	0	2926	9268	0	3074	10022	0	3173	12197	0	3549	14486	0	3686	15826	0	3762	18259	0	3960
	20	5040	0	2888	8064	0	2964	9187	0	3124	9936	0	3230	12096	0	3610	14400	0	3800	15480	0	3933	18144	0	4142
	22	4968	0	2926	7992	0	3002	9072	0	3189	9792	0	3314	11966	0	3697	14314	0	3952	15653	0	4077	18058	0	4313
	24	4896	0	2964	7920	0	3040	8991	0	3252	9706	0	3393	11866	0	3785	14227	0	4104	15566	0	4233	17798	0	4488
(1.2+1.2+2.5) +(1.2+2.5+3.5)	16	5184	0	2812	8208	0	2888	9357	0	3011	10123	0	3093	12326	0	3462	14558	0	3507	15883	0	3602	18331	0	3781
	18	5112	0	2850	8136	0	2926	9268	0	3074	10022	0	3173	12197	0	3549	14486	0	3686	15826	0	3762	18259	0	3960
	20	5040	0	2888	8064	0	2964	9187	0	3124	9936	0	3230	12096	0	3610	14400	0	3800	15480	0	3933	18144	0	4142
	22	4968	0	2926	7992	0	3002	9072	0	3189	9792	0	3314	11966	0	3697	14314	0	3952	15653	0	4077	18058	0	4313
	24	4896	0	2964	7920	0	3040	8991	0	3252	9706	0	3393	11866	0	3785	14227	0	4104	15566	0	4233	17798	0	4488
(1.2+1.2+2.5) +(1.2+3.5+3.5)	16	5184	0	2812	8208	0	2888	9357	0	3011	10123	0	3093	12326	0	3462	14558	0	3507	15883	0	3602	18331	0	3781
	18	5112	0	2850	8136	0	2926	9268	0	3074	10022	0	3173	12197	0	3549	14486	0	3686	15826	0	3762	18259	0	3960
	20	5040	0	2888	8064	0	2964	9187	0	3124	9936	0	3230	12096	0	3610	14400	0	3800	15480	0	3933	18144	0	4142
	22	4968	0	2926	7992	0	3002	9072	0	3189	9792	0	3314	11966	0	3697	14314	0	3952	15653	0	4077	18058	0	4313
	24	4896	0	2964	7920	0	3040	8991	0	3252	9706	0	3393	11866	0	3785	14227	0	4104	15566	0	4233	17798	0	4488
(1.2+1.2+2.5) +(1.8+1.8+1.8)	16	5112	0	2775	8093	0	2850	9227	0	2972	9982	0	3053	12154	0	3416	14355	0	3461	15661	0	3555	18075	0	3731
	18	5041	0	2813	8022	0	2888	9138	0	3034	9883	0	3131	12027	0	3503	14284	0	3638	15605	0	3713	18004	0	3908
	20	4970	0	2850	7951	0	2925	9059	0	3083	9797	0	3188	11927	0	3563	14199	0	3750	15264	0	3881	17891	0	4088
	22	4899	0	2888	7880	0	2963	8945	0	3147	9655	0	3270	11799	0	3649	14114	0	3900	15434	0	4024	17806	0	4256
	24	4828	0	2925	7809	0	3000	8866	0	3209	9570	0	3349	11700	0	3735	14029	0	4050	15349	0	4178	17550	0	4429
(1.2+1.2+2.5) +(1.8+1.8+2.5)	16	5184	0	2812	8208	0	2888	9357	0	3011	10123	0	3093	12326	0	3462	14558	0	3507	15883	0	3602	18331	0	3781
	18	5112	0	2850	8136	0	2926	9268	0	3074	10022	0	3173	12197	0	3549	14486	0	3686	15826	0	3762	18259	0	3960
	20	5040	0	2888	8064	0	2964	9187	0	3124	9936	0	3230	12096	0	3610	14400	0	3800	15480	0	3933	18144	0	4142
	22	4968	0	2926	7992	0	3002	9072	0	3189	9792	0	3314	11966	0	3697	14314	0	3952	15653	0	4077	18058	0	4313
	24	4896	0	2964	7920	0	3040	8991	0	3252	9706	0	3393	11866	0	3785	14227	0	4104	15566	0	4233	17798	0	4488
(1.2+1.2+2.5) +(1.8+1.8+3.5)	16	5184	0	2812	8208	0	2888	9357	0	3011	10123	0	3093	12326	0	3462	14558	0	3507	15883	0	3602	18331	0	3781
	18	5112	0	2850	8136	0	2926	9268	0	3074	10022	0	3173	12197	0	3549	14486	0	3686	15826	0	3762	18259	0	3960
	20	5040	0	2888	8064	0	2964	9187	0	3124	9936	0	3230	12096	0	3610	14400	0	3800	15480	0	3933	18144	0	4142
	22	4968	0	2926	7992	0	3002	9072	0	3189	9792	0	3314	11966	0	3697	14314	0	3952	15653	0	4077	18058	0	4313
	24	4896	0	2964	7920	0	3040	8991	0	3252	9706	0	3393	11866	0	3785	14227	0	4104	15566	0	4233	17798	0	4488

EWB : Evaporator Wet Bulb temperature (°C)

EDB : Evaporator Dry Bulb temperature (°C)

(°CDB) : Outdoor Unit Inlet Air Dry Temperature (°C)

TC : Total Capacity (W)

SHC : Sensible Heating Capacity (W)

PI : Power Input

	INDOOR	OUTDOOR TEMPERATURE (°CDW)																							
	EDB	-15			-10			-7			-5			0			7			10			15		
	°C	TC	SHC	PI	TC	SHC	PI	TC	SHC	PI	TC	SHC	PI	TC	SHC	PI	TC	SHC	PI	TC	SHC	PI	TC	SHC	PI
(1.2+1.2+2.5) +(1.8+1.8+5)	16	5184	0	2812	8208	0	2888	9357	0	3011	10123	0	3093	12326	0	3462	14558	0	3507	15883	0	3602	18331	0	3781
	18	5112	0	2850	8136	0	2926	9268	0	3074	10022	0	3173	12197	0	3549	14486	0	3686	15826	0	3762	18259	0	3960
	20	5040	0	2888	8064	0	2964	9187	0	3124	9936	0	3230	12096	0	3610	14400	0	3800	15480	0	3933	18144	0	4142
	22	4968	0	2926	7992	0	3002	9072	0	3189	9792	0	3314	11966	0	3697	14314	0	3952	15653	0	4077	18058	0	4313
	24	4896	0	2964	7920	0	3040	8991	0	3252	9706	0	3393	11866	0	3785	14227	0	4104	15566	0	4233	17798	0	4488
(1.2+1.2+2.5) +(1.8+2.5+2.5)	16	5184	0	2812	8208	0	2888	9357	0	3011	10123	0	3093	12326	0	3462	14558	0	3507	15883	0	3602	18331	0	3781
	18	5112	0	2850	8136	0	2926	9268	0	3074	10022	0	3173	12197	0	3549	14486	0	3686	15826	0	3762	18259	0	3960
	20	5040	0	2888	8064	0	2964	9187	0	3124	9936	0	3230	12096	0	3610	14400	0	3800	15480	0	3933	18144	0	4142
	22	4968	0	2926	7992	0	3002	9072	0	3189	9792	0	3314	11966	0	3697	14314	0	3952	15653	0	4077	18058	0	4313
	24	4896	0	2964	7920	0	3040	8991	0	3252	9706	0	3393	11866	0	3785	14227	0	4104	15566	0	4233	17798	0	4488
(1.2+1.2+2.5) +(1.8+2.5+3.5)	16	5184	0	2812	8208	0	2888	9357	0	3011	10123	0	3093	12326	0	3462	14558	0	3507	15883	0	3602	18331	0	3781
	18	5112	0	2850	8136	0	2926	9268	0	3074	10022	0	3173	12197	0	3549	14486	0	3686	15826	0	3762	18259	0	3960
	20	5040	0	2888	8064	0	2964	9187	0	3124	9936	0	3230	12096	0	3610	14400	0	3800	15480	0	3933	18144	0	4142
	22	4968	0	2926	7992	0	3002	9072	0	3189	9792	0	3314	11966	0	3697	14314	0	3952	15653	0	4077	18058	0	4313
	24	4896	0	2964	7920	0	3040	8991	0	3252	9706	0	3393	11866	0	3785	14227	0	4104	15566	0	4233	17798	0	4488
(1.2+1.2+2.5) +(1.8+3.5+3.5)	16	5184	0	2812	8208	0	2888	9357	0	3011	10123	0	3093	12326	0	3462	14558	0	3507	15883	0	3602	18331	0	3781
	18	5112	0	2850	8136	0	2926	9268	0	3074	10022	0	3173	12197	0	3549	14486	0	3686	15826	0	3762	18259	0	3960
	20	5040	0	2888	8064	0	2964	9187	0	3124	9936	0	3230	12096	0	3610	14400	0	3800	15480	0	3933	18144	0	4142
	22	4968	0	2926	7992	0	3002	9072	0	3189	9792	0	3314	11966	0	3697	14314	0	3952	15653	0	4077	18058	0	4313
	24	4896	0	2964	7920	0	3040	8991	0	3252	9706	0	3393	11866	0	3785	14227	0	4104	15566	0	4233	17798	0	4488
(1.2+1.2+2.5) +(2.5+2.5+2.5)	16	5184	0	2812	8208	0	2888	9357	0	3011	10123	0	3093	12326	0	3462	14558	0	3507	15883	0	3602	18331	0	3781
	18	5112	0	2850	8136	0	2926	9268	0	3074	10022	0	3173	12197	0	3549	14486	0	3686	15826	0	3762	18259	0	3960
	20	5040	0	2888	8064	0	2964	9187	0	3124	9936	0	3230	12096	0	3610	14400	0	3800	15480	0	3933	18144	0	4142
	22	4968	0	2926	7992	0	3002	9072	0	3189	9792	0	3314	11966	0	3697	14314	0	3952	15653	0	4077	18058	0	4313
	24	4896	0	2964	7920	0	3040	8991	0	3252	9706	0	3393	11866	0	3785	14227	0	4104	15566	0	4233	17798	0	4488
(1.2+1.2+2.5) +(2.5+2.5+3.5)	16	5184	0	2812	8208	0	2888	9357	0	3011	10123	0	3093	12326	0	3462	14558	0	3507	15883	0	3602	18331	0	3781
	18	5112	0	2850	8136	0	2926	9268	0	3074	10022	0	3173	12197	0	3549	14486	0	3686	15826	0	3762	18259	0	3960
	20	5040	0	2888	8064	0	2964	9187	0	3124	9936	0	3230	12096	0	3610	14400	0	3800	15480	0	3933	18144	0	4142
	22	4968	0	2926	7992	0	3002	9072	0	3189	9792	0	3314	11966	0	3697	14314	0	3952	15653	0	4077	18058	0	4313
	24	4896	0	2964	7920	0	3040	8991	0	3252	9706	0	3393	11866	0	3785	14227	0	4104	15566	0	4233	17798	0	4488
(1.2+1.2+3.5) +(1.2+1.2+1.2)	16	4536	0	2501	7182	0	2569	8187	0	2678	8858	0	2751	10786	0	3079	12739	0	3120	13898	0	3204	16040	0	3363
	18	4473	0	2535	7119	0	2603	8109	0	2734	8770	0	2822	10672	0	3157	12676	0	3279	13847	0	3346	15977	0	3522
	20	4410	0	2569	7056	0	2636	8039	0	2778	8694	0	2873	10584	0	3211	12600	0	3380	13545	0	3498	15876	0	3684
	22	4347	0	2603	6993	0	2670	7938	0	2836	8568	0	2947	10471	0	3289	12524	0	3515	13696	0	3627	15800	0	3836
	24	4284	0	2636	6930	0	2704	7867	0	2893	8492	0	3018	10382	0	3366	12449	0	3650	13621	0	3765	15574	0	3992
(1.2+1.2+3.5) +(1.2+1.2+1.8)	16	4788	0	2575	7581	0	2645	8642	0	2758	9350	0	2833	11385	0	3170	13446	0	3212	14670	0	3299	16931	0	3463
	18	4722	0	2610	7515	0	2680	8560	0	2815	9257	0	2906	11265	0	3250	13380	0	3376	14617	0	3445	16864	0	3626
	20	4655	0	2645	7448	0	2714	8485	0	2861	9177	0	2958	11172	0	3306	13300	0	3480	14298	0	3602	16758	0	3793
	22	4589	0	2680	7382	0	2749	8379	0	2920	9044	0	3035	11052	0	3386	13220	0	3619	14457	0	3734	16678	0	3950
	24	4522	0	2714	7315	0	2784	8305	0	2978	8964	0	3108	10959	0	3466	13140	0	3758	14377	0	3877	16439	0	4110

EWB : Evaporator Wet Bulb temperature (°C)

EDB : Evaporator Dry Bulb temperature (°C)

(°CDB) : Outdoor Unit Inlet Air Dry Temperature (°C)

TC : Total Capacity (W)

SHC : Sensible Heating Capacity (W)

PI : Power Input

	INDOOR	OUTDOOR TEMPERATURE (°CDW)																							
	EDB	-15			-10			-7			-5			0			7			10			15		
	°C	TC	SHC	PI	TC	SHC	PI	TC	SHC	PI	TC	SHC	PI	TC	SHC	PI	TC	SHC	PI	TC	SHC	PI	TC	SHC	PI
(1.2+1.2+3.5)+(1.2+1.2+2.5)	16	5184	0	2812	8208	0	2888	9357	0	3011	10123	0	3093	12326	0	3462	14558	0	3507	15883	0	3602	18331	0	3781
	18	5112	0	2850	8136	0	2926	9268	0	3074	10022	0	3173	12197	0	3549	14486	0	3686	15826	0	3762	18259	0	3960
	20	5040	0	2888	8064	0	2964	9187	0	3124	9936	0	3230	12096	0	3610	14400	0	3800	15480	0	3933	18144	0	4142
	22	4968	0	2926	7992	0	3002	9072	0	3189	9792	0	3314	11966	0	3697	14314	0	3952	15653	0	4077	18058	0	4313
	24	4896	0	2964	7920	0	3040	8991	0	3252	9706	0	3393	11866	0	3785	14227	0	4104	15566	0	4233	17798	0	4488
(1.2+1.2+3.5)+(1.2+1.2+3.5)	16	5184	0	2812	8208	0	2888	9357	0	3011	10123	0	3093	12326	0	3462	14558	0	3507	15883	0	3602	18331	0	3781
	18	5112	0	2850	8136	0	2926	9268	0	3074	10022	0	3173	12197	0	3549	14486	0	3686	15826	0	3762	18259	0	3960
	20	5040	0	2888	8064	0	2964	9187	0	3124	9936	0	3230	12096	0	3610	14400	0	3800	15480	0	3933	18144	0	4142
	22	4968	0	2926	7992	0	3002	9072	0	3189	9792	0	3314	11966	0	3697	14314	0	3952	15653	0	4077	18058	0	4313
	24	4896	0	2964	7920	0	3040	8991	0	3252	9706	0	3393	11866	0	3785	14227	0	4104	15566	0	4233	17798	0	4488
(1.2+1.2+3.5)+(1.2+1.2+5)	16	5184	0	2812	8208	0	2888	9357	0	3011	10123	0	3093	12326	0	3462	14558	0	3507	15883	0	3602	18331	0	3781
	18	5112	0	2850	8136	0	2926	9268	0	3074	10022	0	3173	12197	0	3549	14486	0	3686	15826	0	3762	18259	0	3960
	20	5040	0	2888	8064	0	2964	9187	0	3124	9936	0	3230	12096	0	3610	14400	0	3800	15480	0	3933	18144	0	4142
	22	4968	0	2926	7992	0	3002	9072	0	3189	9792	0	3314	11966	0	3697	14314	0	3952	15653	0	4077	18058	0	4313
	24	4896	0	2964	7920	0	3040	8991	0	3252	9706	0	3393	11866	0	3785	14227	0	4104	15566	0	4233	17798	0	4488
(1.2+1.2+3.5)+(1.2+1.8+1.8)	16	5040	0	2701	7980	0	2774	9097	0	2892	9842	0	2971	11984	0	3325	14154	0	3369	15442	0	3460	17822	0	3632
	18	4970	0	2738	7910	0	2811	9010	0	2953	9744	0	3048	11858	0	3409	14084	0	3541	15386	0	3614	17752	0	3803
	20	4900	0	2774	7840	0	2847	8932	0	3000	9660	0	3103	11760	0	3468	14000	0	3650	15050	0	3778	17640	0	3979
	22	4830	0	2811	7770	0	2884	8820	0	3063	9520	0	3183	11634	0	3551	13916	0	3796	15218	0	3916	17556	0	4143
	24	4760	0	2847	7700	0	2920	8742	0	3124	9436	0	3259	11536	0	3635	13832	0	3942	15134	0	4066	17304	0	4311
(1.2+1.2+3.5)+(1.2+1.8+2.5)	16	5184	0	2812	8208	0	2888	9357	0	3011	10123	0	3093	12326	0	3462	14558	0	3507	15883	0	3602	18331	0	3781
	18	5112	0	2850	8136	0	2926	9268	0	3074	10022	0	3173	12197	0	3549	14486	0	3686	15826	0	3762	18259	0	3960
	20	5040	0	2888	8064	0	2964	9187	0	3124	9936	0	3230	12096	0	3610	14400	0	3800	15480	0	3933	18144	0	4142
	22	4968	0	2926	7992	0	3002	9072	0	3189	9792	0	3314	11966	0	3697	14314	0	3952	15653	0	4077	18058	0	4313
	24	4896	0	2964	7920	0	3040	8991	0	3252	9706	0	3393	11866	0	3785	14227	0	4104	15566	0	4233	17798	0	4488
(1.2+1.2+3.5)+(1.2+1.8+3.5)	16	5184	0	2812	8208	0	2888	9357	0	3011	10123	0	3093	12326	0	3462	14558	0	3507	15883	0	3602	18331	0	3781
	18	5112	0	2850	8136	0	2926	9268	0	3074	10022	0	3173	12197	0	3549	14486	0	3686	15826	0	3762	18259	0	3960
	20	5040	0	2888	8064	0	2964	9187	0	3124	9936	0	3230	12096	0	3610	14400	0	3800	15480	0	3933	18144	0	4142
	22	4968	0	2926	7992	0	3002	9072	0	3189	9792	0	3314	11966	0	3697	14314	0	3952	15653	0	4077	18058	0	4313
	24	4896	0	2964	7920	0	3040	8991	0	3252	9706	0	3393	11866	0	3785	14227	0	4104	15566	0	4233	17798	0	4488
(1.2+1.2+3.5)+(1.2+1.8+5)	16	5184	0	2812	8208	0	2888	9357	0	3011	10123	0	3093	12326	0	3462	14558	0	3507	15883	0	3602	18331	0	3781
	18	5112	0	2850	8136	0	2926	9268	0	3074	10022	0	3173	12197	0	3549	14486	0	3686	15826	0	3762	18259	0	3960
	20	5040	0	2888	8064	0	2964	9187	0	3124	9936	0	3230	12096	0	3610	14400	0	3800	15480	0	3933	18144	0	4142
	22	4968	0	2926	7992	0	3002	9072	0	3189	9792	0	3314	11966	0	3697	14314	0	3952	15653	0	4077	18058	0	4313
	24	4896	0	2964	7920	0	3040	8991	0	3252	9706	0	3393	11866	0	3785	14227	0	4104	15566	0	4233	17798	0	4488
(1.2+1.2+3.5)+(1.2+2.5+2.5)	16	5184	0	2812	8208	0	2888	9357	0	3011	10123	0	3093	12326	0	3462	14558	0	3507	15883	0	3602	18331	0	3781
	18	5112	0	2850	8136	0	2926	9268	0	3074	10022	0	3173	12197	0	3549	14486	0	3686	15826	0	3762	18259	0	3960
	20	5040	0	2888	8064	0	2964	9187	0	3124	9936	0	3230	12096	0	3610	14400	0	3800	15480	0	3933	18144	0	4142
	22	4968	0	2926	7992	0	3002	9072	0	3189	9792	0	3314	11966	0	3697	14314	0	3952	15653	0	4077	18058	0	4313
	24	4896	0	2964	7920	0	3040	8991	0	3252	9706	0	3393	11866	0	3785	14227	0	4104	15566	0	4233	17798	0	4488

EWB : Evaporator Wet Bulb temperature (°C)

EDB : Evaporator Dry Bulb temperature (°C)

(°CDB) : Outdoor Unit Inlet Air Dry Temperature (°C)

TC : Total Capacity (W)

SHC : Sensible Heating Capacity (W)

PI : Power Input

	INDOOR	OUTDOOR TEMPERATURE (°CDW)																							
	EDB	-15			-10			-7			-5			0			7			10			15		
	°C	TC	SHC	PI	TC	SHC	PI	TC	SHC	PI	TC	SHC	PI	TC	SHC	PI	TC	SHC	PI	TC	SHC	PI	TC	SHC	PI
(1.2+1.2+3.5) +(1.2+2.5+3.5)	16	5184	0	2812	8208	0	2888	9357	0	3011	10123	0	3093	12326	0	3462	14558	0	3507	15883	0	3602	18331	0	3781
	18	5112	0	2850	8136	0	2926	9268	0	3074	10022	0	3173	12197	0	3549	14486	0	3686	15826	0	3762	18259	0	3960
	20	5040	0	2888	8064	0	2964	9187	0	3124	9936	0	3230	12096	0	3610	14400	0	3800	15480	0	3933	18144	0	4142
	22	4968	0	2926	7992	0	3002	9072	0	3189	9792	0	3314	11966	0	3697	14314	0	3952	15653	0	4077	18058	0	4313
	24	4896	0	2964	7920	0	3040	8991	0	3252	9706	0	3393	11866	0	3785	14227	0	4104	15566	0	4233	17798	0	4488
(1.2+1.2+3.5) +(1.2+3.5+3.5)	16	5184	0	2812	8208	0	2888	9357	0	3011	10123	0	3093	12326	0	3462	14558	0	3507	15883	0	3602	18331	0	3781
	18	5112	0	2850	8136	0	2926	9268	0	3074	10022	0	3173	12197	0	3549	14486	0	3686	15826	0	3762	18259	0	3960
	20	5040	0	2888	8064	0	2964	9187	0	3124	9936	0	3230	12096	0	3610	14400	0	3800	15480	0	3933	18144	0	4142
	22	4968	0	2926	7992	0	3002	9072	0	3189	9792	0	3314	11966	0	3697	14314	0	3952	15653	0	4077	18058	0	4313
	24	4896	0	2964	7920	0	3040	8991	0	3252	9706	0	3393	11866	0	3785	14227	0	4104	15566	0	4233	17798	0	4488
(1.2+1.2+3.5) +(1.8+1.8+1.8)	16	5112	0	2775	8093	0	2850	9227	0	2972	9982	0	3053	12154	0	3416	14355	0	3461	15661	0	3555	18075	0	3731
	18	5041	0	2813	8022	0	2888	9138	0	3034	9883	0	3131	12027	0	3503	14284	0	3638	15605	0	3713	18004	0	3908
	20	4970	0	2850	7951	0	2925	9059	0	3083	9797	0	3188	11927	0	3563	14199	0	3750	15264	0	3881	17891	0	4088
	22	4899	0	2888	7880	0	2963	8945	0	3147	9655	0	3270	11799	0	3649	14114	0	3900	15434	0	4024	17806	0	4256
	24	4828	0	2925	7809	0	3000	8866	0	3209	9570	0	3349	11700	0	3735	14029	0	4050	15349	0	4178	17550	0	4429
(1.2+1.2+3.5) +(1.8+1.8+2.5)	16	5184	0	2812	8208	0	2888	9357	0	3011	10123	0	3093	12326	0	3462	14558	0	3507	15883	0	3602	18331	0	3781
	18	5112	0	2850	8136	0	2926	9268	0	3074	10022	0	3173	12197	0	3549	14486	0	3686	15826	0	3762	18259	0	3960
	20	5040	0	2888	8064	0	2964	9187	0	3124	9936	0	3230	12096	0	3610	14400	0	3800	15480	0	3933	18144	0	4142
	22	4968	0	2926	7992	0	3002	9072	0	3189	9792	0	3314	11966	0	3697	14314	0	3952	15653	0	4077	18058	0	4313
	24	4896	0	2964	7920	0	3040	8991	0	3252	9706	0	3393	11866	0	3785	14227	0	4104	15566	0	4233	17798	0	4488
(1.2+1.2+3.5) +(1.8+1.8+3.5)	16	5184	0	2812	8208	0	2888	9357	0	3011	10123	0	3093	12326	0	3462	14558	0	3507	15883	0	3602	18331	0	3781
	18	5112	0	2850	8136	0	2926	9268	0	3074	10022	0	3173	12197	0	3549	14486	0	3686	15826	0	3762	18259	0	3960
	20	5040	0	2888	8064	0	2964	9187	0	3124	9936	0	3230	12096	0	3610	14400	0	3800	15480	0	3933	18144	0	4142
	22	4968	0	2926	7992	0	3002	9072	0	3189	9792	0	3314	11966	0	3697	14314	0	3952	15653	0	4077	18058	0	4313
	24	4896	0	2964	7920	0	3040	8991	0	3252	9706	0	3393	11866	0	3785	14227	0	4104	15566	0	4233	17798	0	4488
(1.2+1.2+3.5) +(1.8+1.8+5)	16	5184	0	2812	8208	0	2888	9357	0	3011	10123	0	3093	12326	0	3462	14558	0	3507	15883	0	3602	18331	0	3781
	18	5112	0	2850	8136	0	2926	9268	0	3074	10022	0	3173	12197	0	3549	14486	0	3686	15826	0	3762	18259	0	3960
	20	5040	0	2888	8064	0	2964	9187	0	3124	9936	0	3230	12096	0	3610	14400	0	3800	15480	0	3933	18144	0	4142
	22	4968	0	2926	7992	0	3002	9072	0	3189	9792	0	3314	11966	0	3697	14314	0	3952	15653	0	4077	18058	0	4313
	24	4896	0	2964	7920	0	3040	8991	0	3252	9706	0	3393	11866	0	3785	14227	0	4104	15566	0	4233	17798	0	4488
(1.2+1.2+3.5) +(1.8+2.5+2.5)	16	5184	0	2812	8208	0	2888	9357	0	3011	10123	0	3093	12326	0	3462	14558	0	3507	15883	0	3602	18331	0	3781
	18	5112	0	2850	8136	0	2926	9268	0	3074	10022	0	3173	12197	0	3549	14486	0	3686	15826	0	3762	18259	0	3960
	20	5040	0	2888	8064	0	2964	9187	0	3124	9936	0	3230	12096	0	3610	14400	0	3800	15480	0	3933	18144	0	4142
	22	4968	0	2926	7992	0	3002	9072	0	3189	9792	0	3314	11966	0	3697	14314	0	3952	15653	0	4077	18058	0	4313
	24	4896	0	2964	7920	0	3040	8991	0	3252	9706	0	3393	11866	0	3785	14227	0	4104	15566	0	4233	17798	0	4488
(1.2+1.2+3.5) +(1.8+2.5+3.5)	16	5184	0	2812	8208	0	2888	9357	0	3011	10123	0	3093	12326	0	3462	14558	0	3507	15883	0	3602	18331	0	3781
	18	5112	0	2850	8136	0	2926	9268	0	3074	10022	0	3173	12197	0	3549	14486	0	3686	15826	0	3762	18259	0	3960
	20	5040	0	2888	8064	0	2964	9187	0	3124	9936	0	3230	12096	0	3610	14400	0	3800	15480	0	3933	18144	0	4142
	22	4968	0	2926	7992	0	3002	9072	0	3189	9792	0	3314	11966	0	3697	14314	0	3952	15653	0	4077	18058	0	4313
	24	4896	0	2964	7920	0	3040	8991	0	3252	9706	0	3393	11866	0	3785	14227	0	4104	15566	0	4233	17798	0	4488

EWB : Evaporator Wet Bulb temperature (°C)

EDB : Evaporator Dry Bulb temperature (°C)

(°CDB) : Outdoor Unit Inlet Air Dry Temperature (°C)

TC : Total Capacity (W)

SHC : Sensible Heating Capacity (W)

PI : Power Input

	INDOOR	OUTDOOR TEMPERATURE (°CDW)																							
	EDB	-15			-10			-7			-5			0			7			10			15		
	°C	TC	SHC	PI	TC	SHC	PI	TC	SHC	PI	TC	SHC	PI	TC	SHC	PI	TC	SHC	PI	TC	SHC	PI	TC	SHC	PI
(1.2+1.2+3.5)+(1.8+3.5+3.5)	16	5184	0	2812	8208	0	2888	9357	0	3011	10123	0	3093	12326	0	3462	14558	0	3507	15883	0	3602	18331	0	3781
	18	5112	0	2850	8136	0	2926	9268	0	3074	10022	0	3173	12197	0	3549	14486	0	3686	15826	0	3762	18259	0	3960
	20	5040	0	2888	8064	0	2964	9187	0	3124	9936	0	3230	12096	0	3610	14400	0	3800	15480	0	3933	18144	0	4142
	22	4968	0	2926	7992	0	3002	9072	0	3189	9792	0	3314	11966	0	3697	14314	0	3952	15653	0	4077	18058	0	4313
	24	4896	0	2964	7920	0	3040	8991	0	3252	9706	0	3393	11866	0	3785	14227	0	4104	15566	0	4233	17798	0	4488
(1.2+1.2+3.5)+(2.5+2.5+2.5)	16	5184	0	2812	8208	0	2888	9357	0	3011	10123	0	3093	12326	0	3462	14558	0	3507	15883	0	3602	18331	0	3781
	18	5112	0	2850	8136	0	2926	9268	0	3074	10022	0	3173	12197	0	3549	14486	0	3686	15826	0	3762	18259	0	3960
	20	5040	0	2888	8064	0	2964	9187	0	3124	9936	0	3230	12096	0	3610	14400	0	3800	15480	0	3933	18144	0	4142
	22	4968	0	2926	7992	0	3002	9072	0	3189	9792	0	3314	11966	0	3697	14314	0	3952	15653	0	4077	18058	0	4313
	24	4896	0	2964	7920	0	3040	8991	0	3252	9706	0	3393	11866	0	3785	14227	0	4104	15566	0	4233	17798	0	4488
(1.2+1.2+3.5)+(2.5+2.5+3.5)	16	5184	0	2812	8208	0	2888	9357	0	3011	10123	0	3093	12326	0	3462	14558	0	3507	15883	0	3602	18331	0	3781
	18	5112	0	2850	8136	0	2926	9268	0	3074	10022	0	3173	12197	0	3549	14486	0	3686	15826	0	3762	18259	0	3960
	20	5040	0	2888	8064	0	2964	9187	0	3124	9936	0	3230	12096	0	3610	14400	0	3800	15480	0	3933	18144	0	4142
	22	4968	0	2926	7992	0	3002	9072	0	3189	9792	0	3314	11966	0	3697	14314	0	3952	15653	0	4077	18058	0	4313
	24	4896	0	2964	7920	0	3040	8991	0	3252	9706	0	3393	11866	0	3785	14227	0	4104	15566	0	4233	17798	0	4488
(1.2+1.2+5)+(1.2+1.2+1.2)	16	4536	0	2501	7182	0	2569	8187	0	2678	8858	0	2751	10786	0	3079	12739	0	3120	13898	0	3204	16040	0	3363
	18	4473	0	2535	7119	0	2603	8109	0	2734	8770	0	2822	10672	0	3157	12676	0	3279	13847	0	3346	15977	0	3522
	20	4410	0	2569	7056	0	2636	8039	0	2778	8694	0	2873	10584	0	3211	12600	0	3380	13545	0	3498	15876	0	3684
	22	4347	0	2603	6993	0	2670	7938	0	2836	8568	0	2947	10471	0	3289	12524	0	3515	13696	0	3627	15800	0	3836
	24	4284	0	2636	6930	0	2704	7867	0	2893	8492	0	3018	10382	0	3366	12449	0	3650	13621	0	3765	15574	0	3992
(1.2+1.2+5)+(1.2+1.2+1.8)	16	4788	0	2575	7581	0	2645	8642	0	2758	9350	0	2833	11385	0	3170	13446	0	3212	14670	0	3299	16931	0	3463
	18	4722	0	2610	7515	0	2680	8560	0	2815	9257	0	2906	11265	0	3250	13380	0	3376	14617	0	3445	16864	0	3626
	20	4655	0	2645	7448	0	2714	8485	0	2861	9177	0	2958	11172	0	3306	13300	0	3480	14298	0	3602	16758	0	3793
	22	4589	0	2680	7382	0	2749	8379	0	2920	9044	0	3035	11052	0	3386	13220	0	3619	14457	0	3734	16678	0	3950
	24	4522	0	2714	7315	0	2784	8305	0	2978	8964	0	3108	10959	0	3466	13140	0	3758	14377	0	3877	16439	0	4110
(1.2+1.2+5)+(1.2+1.2+2.5)	16	5184	0	2812	8208	0	2888	9357	0	3011	10123	0	3093	12326	0	3462	14558	0	3507	15883	0	3602	18331	0	3781
	18	5112	0	2850	8136	0	2926	9268	0	3074	10022	0	3173	12197	0	3549	14486	0	3686	15826	0	3762	18259	0	3960
	20	5040	0	2888	8064	0	2964	9187	0	3124	9936	0	3230	12096	0	3610	14400	0	3800	15480	0	3933	18144	0	4142
	22	4968	0	2926	7992	0	3002	9072	0	3189	9792	0	3314	11966	0	3697	14314	0	3952	15653	0	4077	18058	0	4313
	24	4896	0	2964	7920	0	3040	8991	0	3252	9706	0	3393	11866	0	3785	14227	0	4104	15566	0	4233	17798	0	4488
(1.2+1.2+5)+(1.2+1.2+3.5)	16	5184	0	2812	8208	0	2888	9357	0	3011	10123	0	3093	12326	0	3462	14558	0	3507	15883	0	3602	18331	0	3781
	18	5112	0	2850	8136	0	2926	9268	0	3074	10022	0	3173	12197	0	3549	14486	0	3686	15826	0	3762	18259	0	3960
	20	5040	0	2888	8064	0	2964	9187	0	3124	9936	0	3230	12096	0	3610	14400	0	3800	15480	0	3933	18144	0	4142
	22	4968	0	2926	7992	0	3002	9072	0	3189	9792	0	3314	11966	0	3697	14314	0	3952	15653	0	4077	18058	0	4313
	24	4896	0	2964	7920	0	3040	8991	0	3252	9706	0	3393	11866	0	3785	14227	0	4104	15566	0	4233	17798	0	4488
(1.2+1.2+5)+(1.2+1.2+5)	16	5184	0	2812	8208	0	2888	9357	0	3011	10123	0	3093	12326	0	3462	14558	0	3507	15883	0	3602	18331	0	3781
	18	5112	0	2850	8136	0	2926	9268	0	3074	10022	0	3173	12197	0	3549	14486	0	3686	15826	0	3762	18259	0	3960
	20	5040	0	2888	8064	0	2964	9187	0	3124	9936	0	3230	12096	0	3610	14400	0	3800	15480	0	3933	18144	0	4142
	22	4968	0	2926	7992	0	3002	9072	0	3189	9792	0	3314	11966	0	3697	14314	0	3952	15653	0	4077	18058	0	4313
	24	4896	0	2964	7920	0	3040	8991	0	3252	9706	0	3393	11866	0	3785	14227	0	4104	15566	0	4233	17798	0	4488

EWB : Evaporator Wet Bulb temperature (°C)

EDB : Evaporator Dry Bulb temperature (°C)

(°CDB) : Outdoor Unit Inlet Air Dry Temperature (°C)

TC : Total Capacity (W)

SHC : Sensible Heating Capacity (W)

PI : Power Input

	INDOOR	OUTDOOR TEMPERATURE (°CDW)																							
	EDB	-15			-10			-7			-5			0			7			10			15		
	°C	TC	SHC	PI	TC	SHC	PI	TC	SHC	PI	TC	SHC	PI	TC	SHC	PI	TC	SHC	PI	TC	SHC	PI	TC	SHC	PI
(1.2+1.2+5)+(1.2+1.8+1.8)	16	5040	0	2701	7980	0	2774	9097	0	2892	9842	0	2971	11984	0	3325	14154	0	3369	15442	0	3460	17822	0	3632
	18	4970	0	2738	7910	0	2811	9010	0	2953	9744	0	3048	11858	0	3409	14084	0	3541	15386	0	3614	17752	0	3803
	20	4900	0	2774	7840	0	2847	8932	0	3000	9660	0	3103	11760	0	3468	14000	0	3650	15050	0	3778	17640	0	3979
	22	4830	0	2811	7770	0	2884	8820	0	3063	9520	0	3183	11634	0	3551	13916	0	3796	15218	0	3916	17556	0	4143
	24	4760	0	2847	7700	0	2920	8742	0	3124	9436	0	3259	11536	0	3635	13832	0	3942	15134	0	4066	17304	0	4311
(1.2+1.2+5)+(1.2+1.8+2.5)	16	5184	0	2812	8208	0	2888	9357	0	3011	10123	0	3093	12326	0	3462	14558	0	3507	15883	0	3602	18331	0	3781
	18	5112	0	2850	8136	0	2926	9268	0	3074	10022	0	3173	12197	0	3549	14486	0	3686	15826	0	3762	18259	0	3960
	20	5040	0	2888	8064	0	2964	9187	0	3124	9936	0	3230	12096	0	3610	14400	0	3800	15480	0	3933	18144	0	4142
	22	4968	0	2926	7992	0	3002	9072	0	3189	9792	0	3314	11966	0	3697	14314	0	3952	15653	0	4077	18058	0	4313
	24	4896	0	2964	7920	0	3040	8991	0	3252	9706	0	3393	11866	0	3785	14227	0	4104	15566	0	4233	17798	0	4488
(1.2+1.2+5)+(1.2+1.8+3.5)	16	5184	0	2812	8208	0	2888	9357	0	3011	10123	0	3093	12326	0	3462	14558	0	3507	15883	0	3602	18331	0	3781
	18	5112	0	2850	8136	0	2926	9268	0	3074	10022	0	3173	12197	0	3549	14486	0	3686	15826	0	3762	18259	0	3960
	20	5040	0	2888	8064	0	2964	9187	0	3124	9936	0	3230	12096	0	3610	14400	0	3800	15480	0	3933	18144	0	4142
	22	4968	0	2926	7992	0	3002	9072	0	3189	9792	0	3314	11966	0	3697	14314	0	3952	15653	0	4077	18058	0	4313
	24	4896	0	2964	7920	0	3040	8991	0	3252	9706	0	3393	11866	0	3785	14227	0	4104	15566	0	4233	17798	0	4488
(1.2+1.2+5)+(1.2+1.8+5)	16	5184	0	2812	8208	0	2888	9357	0	3011	10123	0	3093	12326	0	3462	14558	0	3507	15883	0	3602	18331	0	3781
	18	5112	0	2850	8136	0	2926	9268	0	3074	10022	0	3173	12197	0	3549	14486	0	3686	15826	0	3762	18259	0	3960
	20	5040	0	2888	8064	0	2964	9187	0	3124	9936	0	3230	12096	0	3610	14400	0	3800	15480	0	3933	18144	0	4142
	22	4968	0	2926	7992	0	3002	9072	0	3189	9792	0	3314	11966	0	3697	14314	0	3952	15653	0	4077	18058	0	4313
	24	4896	0	2964	7920	0	3040	8991	0	3252	9706	0	3393	11866	0	3785	14227	0	4104	15566	0	4233	17798	0	4488
(1.2+1.2+5)+(1.2+2.5+2.5)	16	5184	0	2812	8208	0	2888	9357	0	3011	10123	0	3093	12326	0	3462	14558	0	3507	15883	0	3602	18331	0	3781
	18	5112	0	2850	8136	0	2926	9268	0	3074	10022	0	3173	12197	0	3549	14486	0	3686	15826	0	3762	18259	0	3960
	20	5040	0	2888	8064	0	2964	9187	0	3124	9936	0	3230	12096	0	3610	14400	0	3800	15480	0	3933	18144	0	4142
	22	4968	0	2926	7992	0	3002	9072	0	3189	9792	0	3314	11966	0	3697	14314	0	3952	15653	0	4077	18058	0	4313
	24	4896	0	2964	7920	0	3040	8991	0	3252	9706	0	3393	11866	0	3785	14227	0	4104	15566	0	4233	17798	0	4488
(1.2+1.2+5)+(1.2+2.5+3.5)	16	5184	0	2812	8208	0	2888	9357	0	3011	10123	0	3093	12326	0	3462	14558	0	3507	15883	0	3602	18331	0	3781
	18	5112	0	2850	8136	0	2926	9268	0	3074	10022	0	3173	12197	0	3549	14486	0	3686	15826	0	3762	18259	0	3960
	20	5040	0	2888	8064	0	2964	9187	0	3124	9936	0	3230	12096	0	3610	14400	0	3800	15480	0	3933	18144	0	4142
	22	4968	0	2926	7992	0	3002	9072	0	3189	9792	0	3314	11966	0	3697	14314	0	3952	15653	0	4077	18058	0	4313
	24	4896	0	2964	7920	0	3040	8991	0	3252	9706	0	3393	11866	0	3785	14227	0	4104	15566	0	4233	17798	0	4488
(1.2+1.2+5)+(1.2+3.5+3.5)	16	5184	0	2812	8208	0	2888	9357	0	3011	10123	0	3093	12326	0	3462	14558	0	3507	15883	0	3602	18331	0	3781
	18	5112	0	2850	8136	0	2926	9268	0	3074	10022	0	3173	12197	0	3549	14486	0	3686	15826	0	3762	18259	0	3960
	20	5040	0	2888	8064	0	2964	9187	0	3124	9936	0	3230	12096	0	3610	14400	0	3800	15480	0	3933	18144	0	4142
	22	4968	0	2926	7992	0	3002	9072	0	3189	9792	0	3314	11966	0	3697	14314	0	3952	15653	0	4077	18058	0	4313
	24	4896	0	2964	7920	0	3040	8991	0	3252	9706	0	3393	11866	0	3785	14227	0	4104	15566	0	4233	17798	0	4488
(1.2+1.2+5)+(1.8+1.8+1.8)	16	5112	0	2775	8093	0	2850	9227	0	2972	9982	0	3053	12154	0	3416	14355	0	3461	15661	0	3555	18075	0	3731
	18	5041	0	2813	8022	0	2888	9138	0	3034	9883	0	3131	12027	0	3503	14284	0	3638	15605	0	3713	18004	0	3908
	20	4970	0	2850	7951	0	2925	9059	0	3083	9797	0	3188	11927	0	3563	14199	0	3750	15264	0	3881	17891	0	4088
	22	4899	0	2888	7880	0	2963	8945	0	3147	9655	0	3270	11799	0	3649	14114	0	3900	15434	0	4024	17806	0	4256
	24	4828	0	2925	7809	0	3000	8866	0	3209	9570	0	3349	11700	0	3735	14029	0	4050	15349	0	4178	17550	0	4429

EWB : Evaporator Wet Bulb temperature (°C)

EDB : Evaporator Dry Bulb temperature (°C)

(°CDB) : Outdoor Unit Inlet Air Dry Temperature (°C)

TC : Total Capacity (W)

SHC : Sensible Heating Capacity (W)

PI : Power Input

	INDOOR	OUTDOOR TEMPERATURE (°CDW)																							
	EDB	-15			-10			-7			-5			0			7			10			15		
	°C	TC	SHC	PI	TC	SHC	PI	TC	SHC	PI	TC	SHC	PI	TC	SHC	PI	TC	SHC	PI	TC	SHC	PI	TC	SHC	PI
(1.2+1.2+5)+(1.8+1.8+2.5)	16	5184	0	2812	8208	0	2888	9357	0	3011	10123	0	3093	12326	0	3462	14558	0	3507	15883	0	3602	18331	0	3781
	18	5112	0	2850	8136	0	2926	9268	0	3074	10022	0	3173	12197	0	3549	14486	0	3686	15826	0	3762	18259	0	3960
	20	5040	0	2888	8064	0	2964	9187	0	3124	9936	0	3230	12096	0	3610	14400	0	3800	15480	0	3933	18144	0	4142
	22	4968	0	2926	7992	0	3002	9072	0	3189	9792	0	3314	11966	0	3697	14314	0	3952	15653	0	4077	18058	0	4313
	24	4896	0	2964	7920	0	3040	8991	0	3252	9706	0	3393	11866	0	3785	14227	0	4104	15566	0	4233	17798	0	4488
(1.2+1.2+5)+(1.8+1.8+3.5)	16	5184	0	2812	8208	0	2888	9357	0	3011	10123	0	3093	12326	0	3462	14558	0	3507	15883	0	3602	18331	0	3781
	18	5112	0	2850	8136	0	2926	9268	0	3074	10022	0	3173	12197	0	3549	14486	0	3686	15826	0	3762	18259	0	3960
	20	5040	0	2888	8064	0	2964	9187	0	3124	9936	0	3230	12096	0	3610	14400	0	3800	15480	0	3933	18144	0	4142
	22	4968	0	2926	7992	0	3002	9072	0	3189	9792	0	3314	11966	0	3697	14314	0	3952	15653	0	4077	18058	0	4313
	24	4896	0	2964	7920	0	3040	8991	0	3252	9706	0	3393	11866	0	3785	14227	0	4104	15566	0	4233	17798	0	4488
(1.2+1.2+5)+(1.8+1.8+5)	16	5184	0	2812	8208	0	2888	9357	0	3011	10123	0	3093	12326	0	3462	14558	0	3507	15883	0	3602	18331	0	3781
	18	5112	0	2850	8136	0	2926	9268	0	3074	10022	0	3173	12197	0	3549	14486	0	3686	15826	0	3762	18259	0	3960
	20	5040	0	2888	8064	0	2964	9187	0	3124	9936	0	3230	12096	0	3610	14400	0	3800	15480	0	3933	18144	0	4142
	22	4968	0	2926	7992	0	3002	9072	0	3189	9792	0	3314	11966	0	3697	14314	0	3952	15653	0	4077	18058	0	4313
	24	4896	0	2964	7920	0	3040	8991	0	3252	9706	0	3393	11866	0	3785	14227	0	4104	15566	0	4233	17798	0	4488
(1.2+1.2+5)+(1.8+2.5+2.5)	16	5184	0	2812	8208	0	2888	9357	0	3011	10123	0	3093	12326	0	3462	14558	0	3507	15883	0	3602	18331	0	3781
	18	5112	0	2850	8136	0	2926	9268	0	3074	10022	0	3173	12197	0	3549	14486	0	3686	15826	0	3762	18259	0	3960
	20	5040	0	2888	8064	0	2964	9187	0	3124	9936	0	3230	12096	0	3610	14400	0	3800	15480	0	3933	18144	0	4142
	22	4968	0	2926	7992	0	3002	9072	0	3189	9792	0	3314	11966	0	3697	14314	0	3952	15653	0	4077	18058	0	4313
	24	4896	0	2964	7920	0	3040	8991	0	3252	9706	0	3393	11866	0	3785	14227	0	4104	15566	0	4233	17798	0	4488
(1.2+1.2+5)+(1.8+2.5+3.5)	16	5184	0	2812	8208	0	2888	9357	0	3011	10123	0	3093	12326	0	3462	14558	0	3507	15883	0	3602	18331	0	3781
	18	5112	0	2850	8136	0	2926	9268	0	3074	10022	0	3173	12197	0	3549	14486	0	3686	15826	0	3762	18259	0	3960
	20	5040	0	2888	8064	0	2964	9187	0	3124	9936	0	3230	12096	0	3610	14400	0	3800	15480	0	3933	18144	0	4142
	22	4968	0	2926	7992	0	3002	9072	0	3189	9792	0	3314	11966	0	3697	14314	0	3952	15653	0	4077	18058	0	4313
	24	4896	0	2964	7920	0	3040	8991	0	3252	9706	0	3393	11866	0	3785	14227	0	4104	15566	0	4233	17798	0	4488
(1.2+1.2+5)+(1.8+3.5+3.5)	16	5184	0	2812	8208	0	2888	9357	0	3011	10123	0	3093	12326	0	3462	14558	0	3507	15883	0	3602	18331	0	3781
	18	5112	0	2850	8136	0	2926	9268	0	3074	10022	0	3173	12197	0	3549	14486	0	3686	15826	0	3762	18259	0	3960
	20	5040	0	2888	8064	0	2964	9187	0	3124	9936	0	3230	12096	0	3610	14400	0	3800	15480	0	3933	18144	0	4142
	22	4968	0	2926	7992	0	3002	9072	0	3189	9792	0	3314	11966	0	3697	14314	0	3952	15653	0	4077	18058	0	4313
	24	4896	0	2964	7920	0	3040	8991	0	3252	9706	0	3393	11866	0	3785	14227	0	4104	15566	0	4233	17798	0	4488
(1.2+1.2+5)+(2.5+2.5+2.5)	16	5184	0	2812	8208	0	2888	9357	0	3011	10123	0	3093	12326	0	3462	14558	0	3507	15883	0	3602	18331	0	3781
	18	5112	0	2850	8136	0	2926	9268	0	3074	10022	0	3173	12197	0	3549	14486	0	3686	15826	0	3762	18259	0	3960
	20	5040	0	2888	8064	0	2964	9187	0	3124	9936	0	3230	12096	0	3610	14400	0	3800	15480	0	3933	18144	0	4142
	22	4968	0	2926	7992	0	3002	9072	0	3189	9792	0	3314	11966	0	3697	14314	0	3952	15653	0	4077	18058	0	4313
	24	4896	0	2964	7920	0	3040	8991	0	3252	9706	0	3393	11866	0	3785	14227	0	4104	15566	0	4233	17798	0	4488
(1.2+1.2+5)+(2.5+2.5+3.5)	16	5184	0	2812	8208	0	2888	9357	0	3011	10123	0	3093	12326	0	3462	14558	0	3507	15883	0	3602	18331	0	3781
	18	5112	0	2850	8136	0	2926	9268	0	3074	10022	0	3173	12197	0	3549	14486	0	3686	15826	0	3762	18259	0	3960
	20	5040	0	2888	8064	0	2964	9187	0	3124	9936	0	3230	12096	0	3610	14400	0	3800	15480	0	3933	18144	0	4142
	22	4968	0	2926	7992	0	3002	9072	0	3189	9792	0	3314	11966	0	3697	14314	0	3952	15653	0	4077	18058	0	4313
	24	4896	0	2964	7920	0	3040	8991	0	3252	9706	0	3393	11866	0	3785	14227	0	4104	15566	0	4233	17798	0	4488

EWB : Evaporator Wet Bulb temperature (°C)

EDB : Evaporator Dry Bulb temperature (°C)

(°CDB) : Outdoor Unit Inlet Air Dry Temperature (°C)

TC : Total Capacity (W)

SHC : Sensible Heating Capacity (W)

PI : Power Input

	INDOOR	OUTDOOR TEMPERATURE (°CDW)																							
	EDB	-15			-10			-7			-5			0			7			10			15		
	°C	TC	SHC	PI	TC	SHC	PI	TC	SHC	PI	TC	SHC	PI	TC	SHC	PI	TC	SHC	PI	TC	SHC	PI	TC	SHC	PI
(1.2+1.8+1.8) +(1.2+1.2+1.2)	16	4392	0	2390	6954	0	2455	7928	0	2559	8577	0	2629	10443	0	2943	12334	0	2981	13457	0	3062	15531	0	3214
	18	4331	0	2423	6893	0	2487	7852	0	2613	8491	0	2697	10333	0	3017	12273	0	3133	13408	0	3198	15470	0	3366
	20	4270	0	2455	6832	0	2519	7784	0	2655	8418	0	2746	10248	0	3069	12200	0	3230	13115	0	3343	15372	0	3521
	22	4209	0	2487	6771	0	2552	7686	0	2711	8296	0	2817	10138	0	3143	12127	0	3359	13261	0	3466	15299	0	3666
	24	4148	0	2519	6710	0	2584	7618	0	2764	8223	0	2884	10053	0	3217	12054	0	3488	13188	0	3598	15079	0	3815
(1.2+1.8+1.8) +(1.2+1.2+1.8)	16	4644	0	2464	7353	0	2531	8382	0	2639	9069	0	2711	11042	0	3034	13042	0	3074	14229	0	3157	16422	0	3313
	18	4580	0	2498	7289	0	2564	8302	0	2694	8978	0	2781	10926	0	3110	12977	0	3230	14177	0	3297	16357	0	3470
	20	4515	0	2531	7224	0	2597	8230	0	2737	8901	0	2831	10836	0	3164	12900	0	3330	13868	0	3447	16254	0	3630
	22	4451	0	2564	7160	0	2631	8127	0	2795	8772	0	2904	10720	0	3240	12823	0	3463	14022	0	3573	16177	0	3780
	24	4386	0	2597	7095	0	2664	8055	0	2850	8695	0	2974	10630	0	3317	12745	0	3596	13945	0	3710	15944	0	3933
(1.2+1.8+1.8) +(1.2+1.2+2.5)	16	5040	0	2701	7980	0	2774	9097	0	2892	9842	0	2971	11984	0	3325	14154	0	3369	15442	0	3460	17822	0	3632
	18	4970	0	2738	7910	0	2811	9010	0	2953	9744	0	3048	11858	0	3409	14084	0	3541	15386	0	3614	17752	0	3803
	20	4900	0	2774	7840	0	2847	8932	0	3000	9660	0	3103	11760	0	3468	14000	0	3650	15050	0	3778	17640	0	3979
	22	4830	0	2811	7770	0	2884	8820	0	3063	9520	0	3183	11634	0	3551	13916	0	3796	15218	0	3916	17556	0	4143
	24	4760	0	2847	7700	0	2920	8742	0	3124	9436	0	3259	11536	0	3635	13832	0	3942	15134	0	4066	17304	0	4311
(1.2+1.8+1.8) +(1.2+1.2+3.5)	16	5040	0	2701	7980	0	2774	9097	0	2892	9842	0	2971	11984	0	3325	14154	0	3369	15442	0	3460	17822	0	3632
	18	4970	0	2738	7910	0	2811	9010	0	2953	9744	0	3048	11858	0	3409	14084	0	3541	15386	0	3614	17752	0	3803
	20	4900	0	2774	7840	0	2847	8932	0	3000	9660	0	3103	11760	0	3468	14000	0	3650	15050	0	3778	17640	0	3979
	22	4830	0	2811	7770	0	2884	8820	0	3063	9520	0	3183	11634	0	3551	13916	0	3796	15218	0	3916	17556	0	4143
	24	4760	0	2847	7700	0	2920	8742	0	3124	9436	0	3259	11536	0	3635	13832	0	3942	15134	0	4066	17304	0	4311
(1.2+1.8+1.8) +(1.2+1.2+5)	16	5040	0	2701	7980	0	2774	9097	0	2892	9842	0	2971	11984	0	3325	14154	0	3369	15442	0	3460	17822	0	3632
	18	4970	0	2738	7910	0	2811	9010	0	2953	9744	0	3048	11858	0	3409	14084	0	3541	15386	0	3614	17752	0	3803
	20	4900	0	2774	7840	0	2847	8932	0	3000	9660	0	3103	11760	0	3468	14000	0	3650	15050	0	3778	17640	0	3979
	22	4830	0	2811	7770	0	2884	8820	0	3063	9520	0	3183	11634	0	3551	13916	0	3796	15218	0	3916	17556	0	4143
	24	4760	0	2847	7700	0	2920	8742	0	3124	9436	0	3259	11536	0	3635	13832	0	3942	15134	0	4066	17304	0	4311
(1.2+1.8+1.8) +(1.2+1.8+1.8)	16	4896	0	2590	7752	0	2660	8837	0	2773	9561	0	2849	11642	0	3189	13750	0	3231	15001	0	3318	17313	0	3483
	18	4828	0	2625	7684	0	2695	8753	0	2832	9466	0	2923	11519	0	3269	13682	0	3395	14946	0	3465	17245	0	3647
	20	4760	0	2660	7616	0	2730	8677	0	2877	9384	0	2975	11424	0	3325	13600	0	3500	14620	0	3623	17136	0	3815
	22	4692	0	2695	7548	0	2765	8568	0	2937	9248	0	3052	11302	0	3406	13518	0	3640	14783	0	3756	17054	0	3973
	24	4624	0	2730	7480	0	2800	8492	0	2995	9166	0	3126	11206	0	3486	13437	0	3780	14702	0	3899	16810	0	4134
(1.2+1.8+1.8) +(1.2+1.8+2.5)	16	5040	0	2701	7980	0	2774	9097	0	2892	9842	0	2971	11984	0	3325	14154	0	3369	15442	0	3460	17822	0	3632
	18	4970	0	2738	7910	0	2811	9010	0	2953	9744	0	3048	11858	0	3409	14084	0	3541	15386	0	3614	17752	0	3803
	20	4900	0	2774	7840	0	2847	8932	0	3000	9660	0	3103	11760	0	3468	14000	0	3650	15050	0	3778	17640	0	3979
	22	4830	0	2811	7770	0	2884	8820	0	3063	9520	0	3183	11634	0	3551	13916	0	3796	15218	0	3916	17556	0	4143
	24	4760	0	2847	7700	0	2920	8742	0	3124	9436	0	3259	11536	0	3635	13832	0	3942	15134	0	4066	17304	0	4311
(1.2+1.8+1.8) +(1.2+1.8+3.5)	16	5040	0	2701	7980	0	2774	9097	0	2892	9842	0	2971	11984	0	3325	14154	0	3369	15442	0	3460	17822	0	3632
	18	4970	0	2738	7910	0	2811	9010	0	2953	9744	0	3048	11858	0	3409	14084	0	3541	15386	0	3614	17752	0	3803
	20	4900	0	2774	7840	0	2847	8932	0	3000	9660	0	3103	11760	0	3468	14000	0	3650	15050	0	3778	17640	0	3979
	22	4830	0	2811	7770	0	2884	8820	0	3063	9520	0	3183	11634	0	3551	13916	0	3796	15218	0	3916	17556	0	4143
	24	4760	0	2847	7700	0	2920	8742	0	3124	9436	0	3259	11536	0	3635	13832	0	3942	15134	0	4066	17304	0	4311

EWB : Evaporator Wet Bulb temperature (°C)

EDB : Evaporator Dry Bulb temperature (°C)

(°CDB) : Outdoor Unit Inlet Air Dry Temperature (°C)

TC : Total Capacity (W)

SHC : Sensible Heating Capacity (W)

PI : Power Input

	INDOOR	OUTDOOR TEMPERATURE (°CDW)																							
	EDB	-15			-10			-7			-5			0			7			10			15		
	°C	TC	SHC	PI	TC	SHC	PI	TC	SHC	PI	TC	SHC	PI	TC	SHC	PI	TC	SHC	PI	TC	SHC	PI	TC	SHC	PI
(1.2+1.8+1.8) +(1.2+1.8+5)	16	5040	0	2701	7980	0	2774	9097	0	2892	9842	0	2971	11984	0	3325	14154	0	3369	15442	0	3460	17822	0	3632
	18	4970	0	2738	7910	0	2811	9010	0	2953	9744	0	3048	11858	0	3409	14084	0	3541	15386	0	3614	17752	0	3803
	20	4900	0	2774	7840	0	2847	8932	0	3000	9660	0	3103	11760	0	3468	14000	0	3650	15050	0	3778	17640	0	3979
	22	4830	0	2811	7770	0	2884	8820	0	3063	9520	0	3183	11634	0	3551	13916	0	3796	15218	0	3916	17556	0	4143
	24	4760	0	2847	7700	0	2920	8742	0	3124	9436	0	3259	11536	0	3635	13832	0	3942	15134	0	4066	17304	0	4311
(1.2+1.8+1.8) +(1.2+2.5+2.5)	16	5040	0	2701	7980	0	2774	9097	0	2892	9842	0	2971	11984	0	3325	14154	0	3369	15442	0	3460	17822	0	3632
	18	4970	0	2738	7910	0	2811	9010	0	2953	9744	0	3048	11858	0	3409	14084	0	3541	15386	0	3614	17752	0	3803
	20	4900	0	2774	7840	0	2847	8932	0	3000	9660	0	3103	11760	0	3468	14000	0	3650	15050	0	3778	17640	0	3979
	22	4830	0	2811	7770	0	2884	8820	0	3063	9520	0	3183	11634	0	3551	13916	0	3796	15218	0	3916	17556	0	4143
	24	4760	0	2847	7700	0	2920	8742	0	3124	9436	0	3259	11536	0	3635	13832	0	3942	15134	0	4066	17304	0	4311
(1.2+1.8+1.8) +(1.2+2.5+3.5)	16	5040	0	2701	7980	0	2774	9097	0	2892	9842	0	2971	11984	0	3325	14154	0	3369	15442	0	3460	17822	0	3632
	18	4970	0	2738	7910	0	2811	9010	0	2953	9744	0	3048	11858	0	3409	14084	0	3541	15386	0	3614	17752	0	3803
	20	4900	0	2774	7840	0	2847	8932	0	3000	9660	0	3103	11760	0	3468	14000	0	3650	15050	0	3778	17640	0	3979
	22	4830	0	2811	7770	0	2884	8820	0	3063	9520	0	3183	11634	0	3551	13916	0	3796	15218	0	3916	17556	0	4143
	24	4760	0	2847	7700	0	2920	8742	0	3124	9436	0	3259	11536	0	3635	13832	0	3942	15134	0	4066	17304	0	4311
(1.2+1.8+1.8) +(1.2+3.5+3.5)	16	5040	0	2701	7980	0	2774	9097	0	2892	9842	0	2971	11984	0	3325	14154	0	3369	15442	0	3460	17822	0	3632
	18	4970	0	2738	7910	0	2811	9010	0	2953	9744	0	3048	11858	0	3409	14084	0	3541	15386	0	3614	17752	0	3803
	20	4900	0	2774	7840	0	2847	8932	0	3000	9660	0	3103	11760	0	3468	14000	0	3650	15050	0	3778	17640	0	3979
	22	4830	0	2811	7770	0	2884	8820	0	3063	9520	0	3183	11634	0	3551	13916	0	3796	15218	0	3916	17556	0	4143
	24	4760	0	2847	7700	0	2920	8742	0	3124	9436	0	3259	11536	0	3635	13832	0	3942	15134	0	4066	17304	0	4311
(1.2+1.8+1.8) +(1.8+1.8+1.8)	16	4968	0	2664	7865	0	2736	8967	0	2853	9701	0	2930	11812	0	3280	13951	0	3323	15220	0	3413	17566	0	3582
	18	4899	0	2700	7796	0	2772	8881	0	2912	9604	0	3006	11688	0	3362	13882	0	3492	15165	0	3564	17497	0	3751
	20	4830	0	2736	7727	0	2808	8804	0	2959	9521	0	3060	11591	0	3420	13799	0	3600	14834	0	3726	17387	0	3924
	22	4761	0	2772	7658	0	2844	8693	0	3021	9383	0	3139	11467	0	3503	13716	0	3744	15000	0	3863	17304	0	4086
	24	4692	0	2808	7589	0	2880	8616	0	3081	9301	0	3215	11370	0	3586	13633	0	3888	14917	0	4010	17056	0	4252
(1.2+1.8+1.8) +(1.8+1.8+2.5)	16	5040	0	2701	7980	0	2774	9097	0	2892	9842	0	2971	11984	0	3325	14154	0	3369	15442	0	3460	17822	0	3632
	18	4970	0	2738	7910	0	2811	9010	0	2953	9744	0	3048	11858	0	3409	14084	0	3541	15386	0	3614	17752	0	3803
	20	4900	0	2774	7840	0	2847	8932	0	3000	9660	0	3103	11760	0	3468	14000	0	3650	15050	0	3778	17640	0	3979
	22	4830	0	2811	7770	0	2884	8820	0	3063	9520	0	3183	11634	0	3551	13916	0	3796	15218	0	3916	17556	0	4143
	24	4760	0	2847	7700	0	2920	8742	0	3124	9436	0	3259	11536	0	3635	13832	0	3942	15134	0	4066	17304	0	4311
(1.2+1.8+1.8) +(1.8+1.8+3.5)	16	5040	0	2701	7980	0	2774	9097	0	2892	9842	0	2971	11984	0	3325	14154	0	3369	15442	0	3460	17822	0	3632
	18	4970	0	2738	7910	0	2811	9010	0	2953	9744	0	3048	11858	0	3409	14084	0	3541	15386	0	3614	17752	0	3803
	20	4900	0	2774	7840	0	2847	8932	0	3000	9660	0	3103	11760	0	3468	14000	0	3650	15050	0	3778	17640	0	3979
	22	4830	0	2811	7770	0	2884	8820	0	3063	9520	0	3183	11634	0	3551	13916	0	3796	15218	0	3916	17556	0	4143
	24	4760	0	2847	7700	0	2920	8742	0	3124	9436	0	3259	11536	0	3635	13832	0	3942	15134	0	4066	17304	0	4311
(1.2+1.8+1.8) +(1.8+1.8+5)	16	5040	0	2701	7980	0	2774	9097	0	2892	9842	0	2971	11984	0	3325	14154	0	3369	15442	0	3460	17822	0	3632
	18	4970	0	2738	7910	0	2811	9010	0	2953	9744	0	3048	11858	0	3409	14084	0	3541	15386	0	3614	17752	0	3803
	20	4900	0	2774	7840	0	2847	8932	0	3000	9660	0	3103	11760	0	3468	14000	0	3650	15050	0	3778	17640	0	3979
	22	4830	0	2811	7770	0	2884	8820	0	3063	9520	0	3183	11634	0	3551	13916	0	3796	15218	0	3916	17556	0	4143
	24	4760	0	2847	7700	0	2920	8742	0	3124	9436	0	3259	11536	0	3635	13832	0	3942	15134	0	4066	17304	0	4311

EWB : Evaporator Wet Bulb temperature (°C)

EDB : Evaporator Dry Bulb temperature (°C)

(°CDB) : Outdoor Unit Inlet Air Dry Temperature (°C)

TC : Total Capacity (W)

SHC : Sensible Heating Capacity (W)

PI : Power Input

	INDOOR	OUTDOOR TEMPERATURE (°CDW)																							
	EDB	-15			-10			-7			-5			0			7			10			15		
	°C	TC	SHC	PI	TC	SHC	PI	TC	SHC	PI	TC	SHC	PI	TC	SHC	PI	TC	SHC	PI	TC	SHC	PI	TC	SHC	PI
(1.2+1.8+1.8) +(1.8+2.5+2.5)	16	5040	0	2701	7980	0	2774	9097	0	2892	9842	0	2971	11984	0	3325	14154	0	3369	15442	0	3460	17822	0	3632
	18	4970	0	2738	7910	0	2811	9010	0	2953	9744	0	3048	11858	0	3409	14084	0	3541	15386	0	3614	17752	0	3803
	20	4900	0	2774	7840	0	2847	8932	0	3000	9660	0	3103	11760	0	3468	14000	0	3650	15050	0	3778	17640	0	3979
	22	4830	0	2811	7770	0	2884	8820	0	3063	9520	0	3183	11634	0	3551	13916	0	3796	15218	0	3916	17556	0	4143
	24	4760	0	2847	7700	0	2920	8742	0	3124	9436	0	3259	11536	0	3635	13832	0	3942	15134	0	4066	17304	0	4311
(1.2+1.8+1.8) +(1.8+2.5+3.5)	16	5040	0	2701	7980	0	2774	9097	0	2892	9842	0	2971	11984	0	3325	14154	0	3369	15442	0	3460	17822	0	3632
	18	4970	0	2738	7910	0	2811	9010	0	2953	9744	0	3048	11858	0	3409	14084	0	3541	15386	0	3614	17752	0	3803
	20	4900	0	2774	7840	0	2847	8932	0	3000	9660	0	3103	11760	0	3468	14000	0	3650	15050	0	3778	17640	0	3979
	22	4830	0	2811	7770	0	2884	8820	0	3063	9520	0	3183	11634	0	3551	13916	0	3796	15218	0	3916	17556	0	4143
	24	4760	0	2847	7700	0	2920	8742	0	3124	9436	0	3259	11536	0	3635	13832	0	3942	15134	0	4066	17304	0	4311
(1.2+1.8+1.8) +(1.8+3.5+3.5)	16	5040	0	2701	7980	0	2774	9097	0	2892	9842	0	2971	11984	0	3325	14154	0	3369	15442	0	3460	17822	0	3632
	18	4970	0	2738	7910	0	2811	9010	0	2953	9744	0	3048	11858	0	3409	14084	0	3541	15386	0	3614	17752	0	3803
	20	4900	0	2774	7840	0	2847	8932	0	3000	9660	0	3103	11760	0	3468	14000	0	3650	15050	0	3778	17640	0	3979
	22	4830	0	2811	7770	0	2884	8820	0	3063	9520	0	3183	11634	0	3551	13916	0	3796	15218	0	3916	17556	0	4143
	24	4760	0	2847	7700	0	2920	8742	0	3124	9436	0	3259	11536	0	3635	13832	0	3942	15134	0	4066	17304	0	4311
(1.2+1.8+1.8) +(2.5+2.5+2.5)	16	5040	0	2701	7980	0	2774	9097	0	2892	9842	0	2971	11984	0	3325	14154	0	3369	15442	0	3460	17822	0	3632
	18	4970	0	2738	7910	0	2811	9010	0	2953	9744	0	3048	11858	0	3409	14084	0	3541	15386	0	3614	17752	0	3803
	20	4900	0	2774	7840	0	2847	8932	0	3000	9660	0	3103	11760	0	3468	14000	0	3650	15050	0	3778	17640	0	3979
	22	4830	0	2811	7770	0	2884	8820	0	3063	9520	0	3183	11634	0	3551	13916	0	3796	15218	0	3916	17556	0	4143
	24	4760	0	2847	7700	0	2920	8742	0	3124	9436	0	3259	11536	0	3635	13832	0	3942	15134	0	4066	17304	0	4311
(1.2+1.8+1.8) +(2.5+2.5+3.5)	16	5040	0	2701	7980	0	2774	9097	0	2892	9842	0	2971	11984	0	3325	14154	0	3369	15442	0	3460	17822	0	3632
	18	4970	0	2738	7910	0	2811	9010	0	2953	9744	0	3048	11858	0	3409	14084	0	3541	15386	0	3614	17752	0	3803
	20	4900	0	2774	7840	0	2847	8932	0	3000	9660	0	3103	11760	0	3468	14000	0	3650	15050	0	3778	17640	0	3979
	22	4830	0	2811	7770	0	2884	8820	0	3063	9520	0	3183	11634	0	3551	13916	0	3796	15218	0	3916	17556	0	4143
	24	4760	0	2847	7700	0	2920	8742	0	3124	9436	0	3259	11536	0	3635	13832	0	3942	15134	0	4066	17304	0	4311
(1.2+1.8+2.5) +(1.2+1.2+1.2)	16	4536	0	2501	7182	0	2569	8187	0	2678	8858	0	2751	10786	0	3079	12739	0	3120	13898	0	3204	16040	0	3363
	18	4473	0	2535	7119	0	2603	8109	0	2734	8770	0	2822	10672	0	3157	12676	0	3279	13847	0	3346	15977	0	3522
	20	4410	0	2569	7056	0	2636	8039	0	2778	8694	0	2873	10584	0	3211	12600	0	3380	13545	0	3498	15876	0	3684
	22	4347	0	2603	6993	0	2670	7938	0	2836	8568	0	2947	10471	0	3289	12524	0	3515	13696	0	3627	15800	0	3836
	24	4284	0	2636	6930	0	2704	7867	0	2893	8492	0	3018	10382	0	3366	12449	0	3650	13621	0	3765	15574	0	3992
(1.2+1.8+2.5) +(1.2+1.2+1.8)	16	4788	0	2575	7581	0	2645	8642	0	2758	9350	0	2833	11385	0	3170	13446	0	3212	14670	0	3299	16931	0	3463
	18	4722	0	2610	7515	0	2680	8560	0	2815	9257	0	2906	11265	0	3250	13380	0	3376	14617	0	3445	16864	0	3626
	20	4655	0	2645	7448	0	2714	8485	0	2861	9177	0	2958	11172	0	3306	13300	0	3480	14298	0	3602	16758	0	3793
	22	4589	0	2680	7382	0	2749	8379	0	2920	9044	0	3035	11052	0	3386	13220	0	3619	14457	0	3734	16678	0	3950
	24	4522	0	2714	7315	0	2784	8305	0	2978	8964	0	3108	10959	0	3466	13140	0	3758	14377	0	3877	16439	0	4110
(1.2+1.8+2.5) +(1.2+1.2+2.5)	16	5184	0	2812	8208	0	2888	9357	0	3011	10123	0	3093	12326	0	3462	14558	0	3507	15883	0	3602	18331	0	3781
	18	5112	0	2850	8136	0	2926	9268	0	3074	10022	0	3173	12197	0	3549	14486	0	3686	15826	0	3762	18259	0	3960
	20	5040	0	2888	8064	0	2964	9187	0	3124	9936	0	3230	12096	0	3610	14400	0	3800	15480	0	3933	18144	0	4142
	22	4968	0	2926	7992	0	3002	9072	0	3189	9792	0	3314	11966	0	3697	14314	0	3952	15653	0	4077	18058	0	4313
	24	4896	0	2964	7920	0	3040	8991	0	3252	9706	0	3393	11866	0	3785	14227	0	4104	15566	0	4233	17798	0	4488

EWB : Evaporator Wet Bulb temperature (°C)

EDB : Evaporator Dry Bulb temperature (°C)

(°CDB) : Outdoor Unit Inlet Air Dry Temperature (°C)

TC : Total Capacity (W)

SHC : Sensible Heating Capacity (W)

PI : Power Input

	INDOOR	OUTDOOR TEMPERATURE (°CDW)																							
	EDB	-15			-10			-7			-5			0			7			10			15		
	°C	TC	SHC	PI	TC	SHC	PI	TC	SHC	PI	TC	SHC	PI	TC	SHC	PI	TC	SHC	PI	TC	SHC	PI	TC	SHC	PI
(1.2+1.8+2.5) +(1.2+1.2+3.5)	16	5184	0	2812	8208	0	2888	9357	0	3011	10123	0	3093	12326	0	3462	14558	0	3507	15883	0	3602	18331	0	3781
	18	5112	0	2850	8136	0	2926	9268	0	3074	10022	0	3173	12197	0	3549	14486	0	3686	15826	0	3762	18259	0	3960
	20	5040	0	2888	8064	0	2964	9187	0	3124	9936	0	3230	12096	0	3610	14400	0	3800	15480	0	3933	18144	0	4142
	22	4968	0	2926	7992	0	3002	9072	0	3189	9792	0	3314	11966	0	3697	14314	0	3952	15653	0	4077	18058	0	4313
	24	4896	0	2964	7920	0	3040	8991	0	3252	9706	0	3393	11866	0	3785	14227	0	4104	15566	0	4233	17798	0	4488
(1.2+1.8+2.5) +(1.2+1.2+5)	16	5184	0	2812	8208	0	2888	9357	0	3011	10123	0	3093	12326	0	3462	14558	0	3507	15883	0	3602	18331	0	3781
	18	5112	0	2850	8136	0	2926	9268	0	3074	10022	0	3173	12197	0	3549	14486	0	3686	15826	0	3762	18259	0	3960
	20	5040	0	2888	8064	0	2964	9187	0	3124	9936	0	3230	12096	0	3610	14400	0	3800	15480	0	3933	18144	0	4142
	22	4968	0	2926	7992	0	3002	9072	0	3189	9792	0	3314	11966	0	3697	14314	0	3952	15653	0	4077	18058	0	4313
	24	4896	0	2964	7920	0	3040	8991	0	3252	9706	0	3393	11866	0	3785	14227	0	4104	15566	0	4233	17798	0	4488
(1.2+1.8+2.5) +(1.2+1.8+1.8)	16	5040	0	2701	7980	0	2774	9097	0	2892	9842	0	2971	11984	0	3325	14154	0	3369	15442	0	3460	17822	0	3632
	18	4970	0	2738	7910	0	2811	9010	0	2953	9744	0	3048	11858	0	3409	14084	0	3541	15386	0	3614	17752	0	3803
	20	4900	0	2774	7840	0	2847	8932	0	3000	9660	0	3103	11760	0	3468	14000	0	3650	15050	0	3778	17640	0	3979
	22	4830	0	2811	7770	0	2884	8820	0	3063	9520	0	3183	11634	0	3551	13916	0	3796	15218	0	3916	17556	0	4143
	24	4760	0	2847	7700	0	2920	8742	0	3124	9436	0	3259	11536	0	3635	13832	0	3942	15134	0	4066	17304	0	4311
(1.2+1.8+2.5) +(1.2+1.8+2.5)	16	5184	0	2812	8208	0	2888	9357	0	3011	10123	0	3093	12326	0	3462	14558	0	3507	15883	0	3602	18331	0	3781
	18	5112	0	2850	8136	0	2926	9268	0	3074	10022	0	3173	12197	0	3549	14486	0	3686	15826	0	3762	18259	0	3960
	20	5040	0	2888	8064	0	2964	9187	0	3124	9936	0	3230	12096	0	3610	14400	0	3800	15480	0	3933	18144	0	4142
	22	4968	0	2926	7992	0	3002	9072	0	3189	9792	0	3314	11966	0	3697	14314	0	3952	15653	0	4077	18058	0	4313
	24	4896	0	2964	7920	0	3040	8991	0	3252	9706	0	3393	11866	0	3785	14227	0	4104	15566	0	4233	17798	0	4488
(1.2+1.8+2.5) +(1.2+1.8+3.5)	16	5184	0	2812	8208	0	2888	9357	0	3011	10123	0	3093	12326	0	3462	14558	0	3507	15883	0	3602	18331	0	3781
	18	5112	0	2850	8136	0	2926	9268	0	3074	10022	0	3173	12197	0	3549	14486	0	3686	15826	0	3762	18259	0	3960
	20	5040	0	2888	8064	0	2964	9187	0	3124	9936	0	3230	12096	0	3610	14400	0	3800	15480	0	3933	18144	0	4142
	22	4968	0	2926	7992	0	3002	9072	0	3189	9792	0	3314	11966	0	3697	14314	0	3952	15653	0	4077	18058	0	4313
	24	4896	0	2964	7920	0	3040	8991	0	3252	9706	0	3393	11866	0	3785	14227	0	4104	15566	0	4233	17798	0	4488
(1.2+1.8+2.5) +(1.2+1.8+5)	16	5184	0	2812	8208	0	2888	9357	0	3011	10123	0	3093	12326	0	3462	14558	0	3507	15883	0	3602	18331	0	3781
	18	5112	0	2850	8136	0	2926	9268	0	3074	10022	0	3173	12197	0	3549	14486	0	3686	15826	0	3762	18259	0	3960
	20	5040	0	2888	8064	0	2964	9187	0	3124	9936	0	3230	12096	0	3610	14400	0	3800	15480	0	3933	18144	0	4142
	22	4968	0	2926	7992	0	3002	9072	0	3189	9792	0	3314	11966	0	3697	14314	0	3952	15653	0	4077	18058	0	4313
	24	4896	0	2964	7920	0	3040	8991	0	3252	9706	0	3393	11866	0	3785	14227	0	4104	15566	0	4233	17798	0	4488
(1.2+1.8+2.5) +(1.2+2.5+2.5)	16	5184	0	2812	8208	0	2888	9357	0	3011	10123	0	3093	12326	0	3462	14558	0	3507	15883	0	3602	18331	0	3781
	18	5112	0	2850	8136	0	2926	9268	0	3074	10022	0	3173	12197	0	3549	14486	0	3686	15826	0	3762	18259	0	3960
	20	5040	0	2888	8064	0	2964	9187	0	3124	9936	0	3230	12096	0	3610	14400	0	3800	15480	0	3933	18144	0	4142
	22	4968	0	2926	7992	0	3002	9072	0	3189	9792	0	3314	11966	0	3697	14314	0	3952	15653	0	4077	18058	0	4313
	24	4896	0	2964	7920	0	3040	8991	0	3252	9706	0	3393	11866	0	3785	14227	0	4104	15566	0	4233	17798	0	4488
(1.2+1.8+2.5) +(1.2+2.5+3.5)	16	5184	0	2812	8208	0	2888	9357	0	3011	10123	0	3093	12326	0	3462	14558	0	3507	15883	0	3602	18331	0	3781
	18	5112	0	2850	8136	0	2926	9268	0	3074	10022	0	3173	12197	0	3549	14486	0	3686	15826	0	3762	18259	0	3960
	20	5040	0	2888	8064	0	2964	9187	0	3124	9936	0	3230	12096	0	3610	14400	0	3800	15480	0	3933	18144	0	4142
	22	4968	0	2926	7992	0	3002	9072	0	3189	9792	0	3314	11966	0	3697	14314	0	3952	15653	0	4077	18058	0	4313
	24	4896	0	2964	7920	0	3040	8991	0	3252	9706	0	3393	11866	0	3785	14227	0	4104	15566	0	4233	17798	0	4488

EWB : Evaporator Wet Bulb temperature (°C)

EDB : Evaporator Dry Bulb temperature (°C)

(°CDB) : Outdoor Unit Inlet Air Dry Temperature (°C)

TC : Total Capacity (W)

SHC : Sensible Heating Capacity (W)

PI : Power Input

	INDOOR	OUTDOOR TEMPERATURE (°CDW)																							
	EDB	-15			-10			-7			-5			0			7			10			15		
	°C	TC	SHC	PI	TC	SHC	PI	TC	SHC	PI	TC	SHC	PI	TC	SHC	PI	TC	SHC	PI	TC	SHC	PI	TC	SHC	PI
(1.2+1.8+2.5) +(1.2+3.5+3.5)	16	5184	0	2812	8208	0	2888	9357	0	3011	10123	0	3093	12326	0	3462	14558	0	3507	15883	0	3602	18331	0	3781
	18	5112	0	2850	8136	0	2926	9268	0	3074	10022	0	3173	12197	0	3549	14486	0	3686	15826	0	3762	18259	0	3960
	20	5040	0	2888	8064	0	2964	9187	0	3124	9936	0	3230	12096	0	3610	14400	0	3800	15480	0	3933	18144	0	4142
	22	4968	0	2926	7992	0	3002	9072	0	3189	9792	0	3314	11966	0	3697	14314	0	3952	15653	0	4077	18058	0	4313
	24	4896	0	2964	7920	0	3040	8991	0	3252	9706	0	3393	11866	0	3785	14227	0	4104	15566	0	4233	17798	0	4488
(1.2+1.8+2.5) +(1.8+1.8+1.8)	16	5112	0	2775	8093	0	2850	9227	0	2972	9982	0	3053	12154	0	3416	14355	0	3461	15661	0	3555	18075	0	3731
	18	5041	0	2813	8022	0	2888	9138	0	3034	9883	0	3131	12027	0	3503	14284	0	3638	15605	0	3713	18004	0	3908
	20	4970	0	2850	7951	0	2925	9059	0	3083	9797	0	3188	11927	0	3563	14199	0	3750	15264	0	3881	17891	0	4088
	22	4899	0	2888	7880	0	2963	8945	0	3147	9655	0	3270	11799	0	3649	14114	0	3900	15434	0	4024	17806	0	4256
	24	4828	0	2925	7809	0	3000	8866	0	3209	9570	0	3349	11700	0	3735	14029	0	4050	15349	0	4178	17550	0	4429
(1.2+1.8+2.5) +(1.8+1.8+2.5)	16	5184	0	2812	8208	0	2888	9357	0	3011	10123	0	3093	12326	0	3462	14558	0	3507	15883	0	3602	18331	0	3781
	18	5112	0	2850	8136	0	2926	9268	0	3074	10022	0	3173	12197	0	3549	14486	0	3686	15826	0	3762	18259	0	3960
	20	5040	0	2888	8064	0	2964	9187	0	3124	9936	0	3230	12096	0	3610	14400	0	3800	15480	0	3933	18144	0	4142
	22	4968	0	2926	7992	0	3002	9072	0	3189	9792	0	3314	11966	0	3697	14314	0	3952	15653	0	4077	18058	0	4313
	24	4896	0	2964	7920	0	3040	8991	0	3252	9706	0	3393	11866	0	3785	14227	0	4104	15566	0	4233	17798	0	4488
(1.2+1.8+2.5) +(1.8+1.8+3.5)	16	5184	0	2812	8208	0	2888	9357	0	3011	10123	0	3093	12326	0	3462	14558	0	3507	15883	0	3602	18331	0	3781
	18	5112	0	2850	8136	0	2926	9268	0	3074	10022	0	3173	12197	0	3549	14486	0	3686	15826	0	3762	18259	0	3960
	20	5040	0	2888	8064	0	2964	9187	0	3124	9936	0	3230	12096	0	3610	14400	0	3800	15480	0	3933	18144	0	4142
	22	4968	0	2926	7992	0	3002	9072	0	3189	9792	0	3314	11966	0	3697	14314	0	3952	15653	0	4077	18058	0	4313
	24	4896	0	2964	7920	0	3040	8991	0	3252	9706	0	3393	11866	0	3785	14227	0	4104	15566	0	4233	17798	0	4488
(1.2+1.8+2.5) +(1.8+1.8+5)	16	5184	0	2812	8208	0	2888	9357	0	3011	10123	0	3093	12326	0	3462	14558	0	3507	15883	0	3602	18331	0	3781
	18	5112	0	2850	8136	0	2926	9268	0	3074	10022	0	3173	12197	0	3549	14486	0	3686	15826	0	3762	18259	0	3960
	20	5040	0	2888	8064	0	2964	9187	0	3124	9936	0	3230	12096	0	3610	14400	0	3800	15480	0	3933	18144	0	4142
	22	4968	0	2926	7992	0	3002	9072	0	3189	9792	0	3314	11966	0	3697	14314	0	3952	15653	0	4077	18058	0	4313
	24	4896	0	2964	7920	0	3040	8991	0	3252	9706	0	3393	11866	0	3785	14227	0	4104	15566	0	4233	17798	0	4488
(1.2+1.8+2.5) +(1.8+2.5+2.5)	16	5184	0	2812	8208	0	2888	9357	0	3011	10123	0	3093	12326	0	3462	14558	0	3507	15883	0	3602	18331	0	3781
	18	5112	0	2850	8136	0	2926	9268	0	3074	10022	0	3173	12197	0	3549	14486	0	3686	15826	0	3762	18259	0	3960
	20	5040	0	2888	8064	0	2964	9187	0	3124	9936	0	3230	12096	0	3610	14400	0	3800	15480	0	3933	18144	0	4142
	22	4968	0	2926	7992	0	3002	9072	0	3189	9792	0	3314	11966	0	3697	14314	0	3952	15653	0	4077	18058	0	4313
	24	4896	0	2964	7920	0	3040	8991	0	3252	9706	0	3393	11866	0	3785	14227	0	4104	15566	0	4233	17798	0	4488
(1.2+1.8+2.5) +(1.8+2.5+3.5)	16	5184	0	2812	8208	0	2888	9357	0	3011	10123	0	3093	12326	0	3462	14558	0	3507	15883	0	3602	18331	0	3781
	18	5112	0	2850	8136	0	2926	9268	0	3074	10022	0	3173	12197	0	3549	14486	0	3686	15826	0	3762	18259	0	3960
	20	5040	0	2888	8064	0	2964	9187	0	3124	9936	0	3230	12096	0	3610	14400	0	3800	15480	0	3933	18144	0	4142
	22	4968	0	2926	7992	0	3002	9072	0	3189	9792	0	3314	11966	0	3697	14314	0	3952	15653	0	4077	18058	0	4313
	24	4896	0	2964	7920	0	3040	8991	0	3252	9706	0	3393	11866	0	3785	14227	0	4104	15566	0	4233	17798	0	4488
(1.2+1.8+2.5) +(1.8+3.5+3.5)	16	5184	0	2812	8208	0	2888	9357	0	3011	10123	0	3093	12326	0	3462	14558	0	3507	15883	0	3602	18331	0	3781
	18	5112	0	2850	8136	0	2926	9268	0	3074	10022	0	3173	12197	0	3549	14486	0	3686	15826	0	3762	18259	0	3960
	20	5040	0	2888	8064	0	2964	9187	0	3124	9936	0	3230	12096	0	3610	14400	0	3800	15480	0	3933	18144	0	4142
	22	4968	0	2926	7992	0	3002	9072	0	3189	9792	0	3314	11966	0	3697	14314	0	3952	15653	0	4077	18058	0	4313
	24	4896	0	2964	7920	0	3040	8991	0	3252	9706	0	3393	11866	0	3785	14227	0	4104	15566	0	4233	17798	0	4488

EWB : Evaporator Wet Bulb temperature (°C)

EDB : Evaporator Dry Bulb temperature (°C)

(°CDB) : Outdoor Unit Inlet Air Dry Temperature (°C)

TC : Total Capacity (W)

SHC : Sensible Heating Capacity (W)

PI : Power Input

	INDOOR	OUTDOOR TEMPERATURE (°CDW)																							
	EDB	-15			-10			-7			-5			0			7			10			15		
	°C	TC	SHC	PI	TC	SHC	PI	TC	SHC	PI	TC	SHC	PI	TC	SHC	PI	TC	SHC	PI	TC	SHC	PI	TC	SHC	PI
(1.2+1.8+2.5) +(2.5+2.5+2.5)	16	5184	0	2812	8208	0	2888	9357	0	3011	10123	0	3093	12326	0	3462	14558	0	3507	15883	0	3602	18331	0	3781
	18	5112	0	2850	8136	0	2926	9268	0	3074	10022	0	3173	12197	0	3549	14486	0	3686	15826	0	3762	18259	0	3960
	20	5040	0	2888	8064	0	2964	9187	0	3124	9936	0	3230	12096	0	3610	14400	0	3800	15480	0	3933	18144	0	4142
	22	4968	0	2926	7992	0	3002	9072	0	3189	9792	0	3314	11966	0	3697	14314	0	3952	15653	0	4077	18058	0	4313
	24	4896	0	2964	7920	0	3040	8991	0	3252	9706	0	3393	11866	0	3785	14227	0	4104	15566	0	4233	17798	0	4488
(1.2+1.8+2.5) +(2.5+2.5+3.5)	16	5184	0	2812	8208	0	2888	9357	0	3011	10123	0	3093	12326	0	3462	14558	0	3507	15883	0	3602	18331	0	3781
	18	5112	0	2850	8136	0	2926	9268	0	3074	10022	0	3173	12197	0	3549	14486	0	3686	15826	0	3762	18259	0	3960
	20	5040	0	2888	8064	0	2964	9187	0	3124	9936	0	3230	12096	0	3610	14400	0	3800	15480	0	3933	18144	0	4142
	22	4968	0	2926	7992	0	3002	9072	0	3189	9792	0	3314	11966	0	3697	14314	0	3952	15653	0	4077	18058	0	4313
	24	4896	0	2964	7920	0	3040	8991	0	3252	9706	0	3393	11866	0	3785	14227	0	4104	15566	0	4233	17798	0	4488
(1.2+1.8+3.5) +(1.2+1.2+1.2)	16	4536	0	2501	7182	0	2569	8187	0	2678	8858	0	2751	10786	0	3079	12739	0	3120	13898	0	3204	16040	0	3363
	18	4473	0	2535	7119	0	2603	8109	0	2734	8770	0	2822	10672	0	3157	12676	0	3279	13847	0	3346	15977	0	3522
	20	4410	0	2569	7056	0	2636	8039	0	2778	8694	0	2873	10584	0	3211	12600	0	3380	13545	0	3498	15876	0	3684
	22	4347	0	2603	6993	0	2670	7938	0	2836	8568	0	2947	10471	0	3289	12524	0	3515	13696	0	3627	15800	0	3836
	24	4284	0	2636	6930	0	2704	7867	0	2893	8492	0	3018	10382	0	3366	12449	0	3650	13621	0	3765	15574	0	3992
(1.2+1.8+3.5) +(1.2+1.2+1.8)	16	4788	0	2575	7581	0	2645	8642	0	2758	9350	0	2833	11385	0	3170	13446	0	3212	14670	0	3299	16931	0	3463
	18	4722	0	2610	7515	0	2680	8560	0	2815	9257	0	2906	11265	0	3250	13380	0	3376	14617	0	3445	16864	0	3626
	20	4655	0	2645	7448	0	2714	8485	0	2861	9177	0	2958	11172	0	3306	13300	0	3480	14298	0	3602	16758	0	3793
	22	4589	0	2680	7382	0	2749	8379	0	2920	9044	0	3035	11052	0	3386	13220	0	3619	14457	0	3734	16678	0	3950
	24	4522	0	2714	7315	0	2784	8305	0	2978	8964	0	3108	10959	0	3466	13140	0	3758	14377	0	3877	16439	0	4110
(1.2+1.8+3.5) +(1.2+1.2+2.5)	16	5184	0	2812	8208	0	2888	9357	0	3011	10123	0	3093	12326	0	3462	14558	0	3507	15883	0	3602	18331	0	3781
	18	5112	0	2850	8136	0	2926	9268	0	3074	10022	0	3173	12197	0	3549	14486	0	3686	15826	0	3762	18259	0	3960
	20	5040	0	2888	8064	0	2964	9187	0	3124	9936	0	3230	12096	0	3610	14400	0	3800	15480	0	3933	18144	0	4142
	22	4968	0	2926	7992	0	3002	9072	0	3189	9792	0	3314	11966	0	3697	14314	0	3952	15653	0	4077	18058	0	4313
	24	4896	0	2964	7920	0	3040	8991	0	3252	9706	0	3393	11866	0	3785	14227	0	4104	15566	0	4233	17798	0	4488
(1.2+1.8+3.5) +(1.2+1.2+3.5)	16	5184	0	2812	8208	0	2888	9357	0	3011	10123	0	3093	12326	0	3462	14558	0	3507	15883	0	3602	18331	0	3781
	18	5112	0	2850	8136	0	2926	9268	0	3074	10022	0	3173	12197	0	3549	14486	0	3686	15826	0	3762	18259	0	3960
	20	5040	0	2888	8064	0	2964	9187	0	3124	9936	0	3230	12096	0	3610	14400	0	3800	15480	0	3933	18144	0	4142
	22	4968	0	2926	7992	0	3002	9072	0	3189	9792	0	3314	11966	0	3697	14314	0	3952	15653	0	4077	18058	0	4313
	24	4896	0	2964	7920	0	3040	8991	0	3252	9706	0	3393	11866	0	3785	14227	0	4104	15566	0	4233	17798	0	4488
(1.2+1.8+3.5) +(1.2+1.2+5)	16	5184	0	2812	8208	0	2888	9357	0	3011	10123	0	3093	12326	0	3462	14558	0	3507	15883	0	3602	18331	0	3781
	18	5112	0	2850	8136	0	2926	9268	0	3074	10022	0	3173	12197	0	3549	14486	0	3686	15826	0	3762	18259	0	3960
	20	5040	0	2888	8064	0	2964	9187	0	3124	9936	0	3230	12096	0	3610	14400	0	3800	15480	0	3933	18144	0	4142
	22	4968	0	2926	7992	0	3002	9072	0	3189	9792	0	3314	11966	0	3697	14314	0	3952	15653	0	4077	18058	0	4313
	24	4896	0	2964	7920	0	3040	8991	0	3252	9706	0	3393	11866	0	3785	14227	0	4104	15566	0	4233	17798	0	4488
(1.2+1.8+3.5) +(1.2+1.8+1.8)	16	5040	0	2701	7980	0	2774	9097	0	2892	9842	0	2971	11984	0	3325	14154	0	3369	15442	0	3460	17822	0	3632
	18	4970	0	2738	7910	0	2811	9010	0	2953	9744	0	3048	11858	0	3409	14084	0	3541	15386	0	3614	17752	0	3803
	20	4900	0	2774	7840	0	2847	8932	0	3000	9660	0	3103	11760	0	3468	14000	0	3650	15050	0	3778	17640	0	3979
	22	4830	0	2811	7770	0	2884	8820	0	3063	9520	0	3183	11634	0	3551	13916	0	3796	15218	0	3916	17556	0	4143
	24	4760	0	2847	7700	0	2920	8742	0	3124	9436	0	3259	11536	0	3635	13832	0	3942	15134	0	4066	17304	0	4311

EWB : Evaporator Wet Bulb temperature (°C)

EDB : Evaporator Dry Bulb temperature (°C)

(°CDB) : Outdoor Unit Inlet Air Dry Temperature (°C)

TC : Total Capacity (W)

SHC : Sensible Heating Capacity (W)

PI : Power Input

	INDOOR	OUTDOOR TEMPERATURE (°CDW)																							
	EDB	-15			-10			-7			-5			0			7			10			15		
	°C	TC	SHC	PI	TC	SHC	PI	TC	SHC	PI	TC	SHC	PI	TC	SHC	PI	TC	SHC	PI	TC	SHC	PI	TC	SHC	PI
(1.2+1.8+3.5)+(1.2+1.8+2.5)	16	5184	0	2812	8208	0	2888	9357	0	3011	10123	0	3093	12326	0	3462	14558	0	3507	15883	0	3602	18331	0	3781
	18	5112	0	2850	8136	0	2926	9268	0	3074	10022	0	3173	12197	0	3549	14486	0	3686	15826	0	3762	18259	0	3960
	20	5040	0	2888	8064	0	2964	9187	0	3124	9936	0	3230	12096	0	3610	14400	0	3800	15480	0	3933	18144	0	4142
	22	4968	0	2926	7992	0	3002	9072	0	3189	9792	0	3314	11966	0	3697	14314	0	3952	15653	0	4077	18058	0	4313
	24	4896	0	2964	7920	0	3040	8991	0	3252	9706	0	3393	11866	0	3785	14227	0	4104	15566	0	4233	17798	0	4488
(1.2+1.8+3.5)+(1.2+1.8+3.5)	16	5184	0	2812	8208	0	2888	9357	0	3011	10123	0	3093	12326	0	3462	14558	0	3507	15883	0	3602	18331	0	3781
	18	5112	0	2850	8136	0	2926	9268	0	3074	10022	0	3173	12197	0	3549	14486	0	3686	15826	0	3762	18259	0	3960
	20	5040	0	2888	8064	0	2964	9187	0	3124	9936	0	3230	12096	0	3610	14400	0	3800	15480	0	3933	18144	0	4142
	22	4968	0	2926	7992	0	3002	9072	0	3189	9792	0	3314	11966	0	3697	14314	0	3952	15653	0	4077	18058	0	4313
	24	4896	0	2964	7920	0	3040	8991	0	3252	9706	0	3393	11866	0	3785	14227	0	4104	15566	0	4233	17798	0	4488
(1.2+1.8+3.5)+(1.2+1.8+5)	16	5184	0	2812	8208	0	2888	9357	0	3011	10123	0	3093	12326	0	3462	14558	0	3507	15883	0	3602	18331	0	3781
	18	5112	0	2850	8136	0	2926	9268	0	3074	10022	0	3173	12197	0	3549	14486	0	3686	15826	0	3762	18259	0	3960
	20	5040	0	2888	8064	0	2964	9187	0	3124	9936	0	3230	12096	0	3610	14400	0	3800	15480	0	3933	18144	0	4142
	22	4968	0	2926	7992	0	3002	9072	0	3189	9792	0	3314	11966	0	3697	14314	0	3952	15653	0	4077	18058	0	4313
	24	4896	0	2964	7920	0	3040	8991	0	3252	9706	0	3393	11866	0	3785	14227	0	4104	15566	0	4233	17798	0	4488
(1.2+1.8+3.5)+(1.2+2.5+2.5)	16	5184	0	2812	8208	0	2888	9357	0	3011	10123	0	3093	12326	0	3462	14558	0	3507	15883	0	3602	18331	0	3781
	18	5112	0	2850	8136	0	2926	9268	0	3074	10022	0	3173	12197	0	3549	14486	0	3686	15826	0	3762	18259	0	3960
	20	5040	0	2888	8064	0	2964	9187	0	3124	9936	0	3230	12096	0	3610	14400	0	3800	15480	0	3933	18144	0	4142
	22	4968	0	2926	7992	0	3002	9072	0	3189	9792	0	3314	11966	0	3697	14314	0	3952	15653	0	4077	18058	0	4313
	24	4896	0	2964	7920	0	3040	8991	0	3252	9706	0	3393	11866	0	3785	14227	0	4104	15566	0	4233	17798	0	4488
(1.2+1.8+3.5)+(1.2+2.5+3.5)	16	5184	0	2812	8208	0	2888	9357	0	3011	10123	0	3093	12326	0	3462	14558	0	3507	15883	0	3602	18331	0	3781
	18	5112	0	2850	8136	0	2926	9268	0	3074	10022	0	3173	12197	0	3549	14486	0	3686	15826	0	3762	18259	0	3960
	20	5040	0	2888	8064	0	2964	9187	0	3124	9936	0	3230	12096	0	3610	14400	0	3800	15480	0	3933	18144	0	4142
	22	4968	0	2926	7992	0	3002	9072	0	3189	9792	0	3314	11966	0	3697	14314	0	3952	15653	0	4077	18058	0	4313
	24	4896	0	2964	7920	0	3040	8991	0	3252	9706	0	3393	11866	0	3785	14227	0	4104	15566	0	4233	17798	0	4488
(1.2+1.8+3.5)+(1.2+3.5+3.5)	16	5184	0	2812	8208	0	2888	9357	0	3011	10123	0	3093	12326	0	3462	14558	0	3507	15883	0	3602	18331	0	3781
	18	5112	0	2850	8136	0	2926	9268	0	3074	10022	0	3173	12197	0	3549	14486	0	3686	15826	0	3762	18259	0	3960
	20	5040	0	2888	8064	0	2964	9187	0	3124	9936	0	3230	12096	0	3610	14400	0	3800	15480	0	3933	18144	0	4142
	22	4968	0	2926	7992	0	3002	9072	0	3189	9792	0	3314	11966	0	3697	14314	0	3952	15653	0	4077	18058	0	4313
	24	4896	0	2964	7920	0	3040	8991	0	3252	9706	0	3393	11866	0	3785	14227	0	4104	15566	0	4233	17798	0	4488
(1.2+1.8+3.5)+(1.8+1.8+1.8)	16	5112	0	2775	8093	0	2850	9227	0	2972	9982	0	3053	12154	0	3416	14355	0	3461	15661	0	3555	18075	0	3731
	18	5041	0	2813	8022	0	2888	9138	0	3034	9883	0	3131	12027	0	3503	14284	0	3638	15605	0	3713	18004	0	3908
	20	4970	0	2850	7951	0	2925	9059	0	3083	9797	0	3188	11927	0	3563	14199	0	3750	15264	0	3881	17891	0	4088
	22	4899	0	2888	7880	0	2963	8945	0	3147	9655	0	3270	11799	0	3649	14114	0	3900	15434	0	4024	17806	0	4256
	24	4828	0	2925	7809	0	3000	8866	0	3209	9570	0	3349	11700	0	3735	14029	0	4050	15349	0	4178	17550	0	4429
(1.2+1.8+3.5)+(1.8+1.8+2.5)	16	5184	0	2812	8208	0	2888	9357	0	3011	10123	0	3093	12326	0	3462	14558	0	3507	15883	0	3602	18331	0	3781
	18	5112	0	2850	8136	0	2926	9268	0	3074	10022	0	3173	12197	0	3549	14486	0	3686	15826	0	3762	18259	0	3960
	20	5040	0	2888	8064	0	2964	9187	0	3124	9936	0	3230	12096	0	3610	14400	0	3800	15480	0	3933	18144	0	4142
	22	4968	0	2926	7992	0	3002	9072	0	3189	9792	0	3314	11966	0	3697	14314	0	3952	15653	0	4077	18058	0	4313
	24	4896	0	2964	7920	0	3040	8991	0	3252	9706	0	3393	11866	0	3785	14227	0	4104	15566	0	4233	17798	0	4488

EWB : Evaporator Wet Bulb temperature (°C)

EDB : Evaporator Dry Bulb temperature (°C)

(°CDB) : Outdoor Unit Inlet Air Dry Temperature (°C)

TC : Total Capacity (W)

SHC : Sensible Heating Capacity (W)

PI : Power Input

	INDOOR	OUTDOOR TEMPERATURE (°CDW)																							
	EDB	-15			-10			-7			-5			0			7			10			15		
	°C	TC	SHC	PI	TC	SHC	PI	TC	SHC	PI	TC	SHC	PI	TC	SHC	PI	TC	SHC	PI	TC	SHC	PI	TC	SHC	PI
(1.2+1.8+3.5)+(1.8+1.8+3.5)	16	5184	0	2812	8208	0	2888	9357	0	3011	10123	0	3093	12326	0	3462	14558	0	3507	15883	0	3602	18331	0	3781
	18	5112	0	2850	8136	0	2926	9268	0	3074	10022	0	3173	12197	0	3549	14486	0	3686	15826	0	3762	18259	0	3960
	20	5040	0	2888	8064	0	2964	9187	0	3124	9936	0	3230	12096	0	3610	14400	0	3800	15480	0	3933	18144	0	4142
	22	4968	0	2926	7992	0	3002	9072	0	3189	9792	0	3314	11966	0	3697	14314	0	3952	15653	0	4077	18058	0	4313
	24	4896	0	2964	7920	0	3040	8991	0	3252	9706	0	3393	11866	0	3785	14227	0	4104	15566	0	4233	17798	0	4488
(1.2+1.8+3.5)+(1.8+1.8+5)	16	5184	0	2812	8208	0	2888	9357	0	3011	10123	0	3093	12326	0	3462	14558	0	3507	15883	0	3602	18331	0	3781
	18	5112	0	2850	8136	0	2926	9268	0	3074	10022	0	3173	12197	0	3549	14486	0	3686	15826	0	3762	18259	0	3960
	20	5040	0	2888	8064	0	2964	9187	0	3124	9936	0	3230	12096	0	3610	14400	0	3800	15480	0	3933	18144	0	4142
	22	4968	0	2926	7992	0	3002	9072	0	3189	9792	0	3314	11966	0	3697	14314	0	3952	15653	0	4077	18058	0	4313
	24	4896	0	2964	7920	0	3040	8991	0	3252	9706	0	3393	11866	0	3785	14227	0	4104	15566	0	4233	17798	0	4488
(1.2+1.8+3.5)+(1.8+2.5+2.5)	16	5184	0	2812	8208	0	2888	9357	0	3011	10123	0	3093	12326	0	3462	14558	0	3507	15883	0	3602	18331	0	3781
	18	5112	0	2850	8136	0	2926	9268	0	3074	10022	0	3173	12197	0	3549	14486	0	3686	15826	0	3762	18259	0	3960
	20	5040	0	2888	8064	0	2964	9187	0	3124	9936	0	3230	12096	0	3610	14400	0	3800	15480	0	3933	18144	0	4142
	22	4968	0	2926	7992	0	3002	9072	0	3189	9792	0	3314	11966	0	3697	14314	0	3952	15653	0	4077	18058	0	4313
	24	4896	0	2964	7920	0	3040	8991	0	3252	9706	0	3393	11866	0	3785	14227	0	4104	15566	0	4233	17798	0	4488
(1.2+1.8+3.5)+(1.8+2.5+3.5)	16	5184	0	2812	8208	0	2888	9357	0	3011	10123	0	3093	12326	0	3462	14558	0	3507	15883	0	3602	18331	0	3781
	18	5112	0	2850	8136	0	2926	9268	0	3074	10022	0	3173	12197	0	3549	14486	0	3686	15826	0	3762	18259	0	3960
	20	5040	0	2888	8064	0	2964	9187	0	3124	9936	0	3230	12096	0	3610	14400	0	3800	15480	0	3933	18144	0	4142
	22	4968	0	2926	7992	0	3002	9072	0	3189	9792	0	3314	11966	0	3697	14314	0	3952	15653	0	4077	18058	0	4313
	24	4896	0	2964	7920	0	3040	8991	0	3252	9706	0	3393	11866	0	3785	14227	0	4104	15566	0	4233	17798	0	4488
(1.2+1.8+3.5)+(1.8+3.5+3.5)	16	5184	0	2812	8208	0	2888	9357	0	3011	10123	0	3093	12326	0	3462	14558	0	3507	15883	0	3602	18331	0	3781
	18	5112	0	2850	8136	0	2926	9268	0	3074	10022	0	3173	12197	0	3549	14486	0	3686	15826	0	3762	18259	0	3960
	20	5040	0	2888	8064	0	2964	9187	0	3124	9936	0	3230	12096	0	3610	14400	0	3800	15480	0	3933	18144	0	4142
	22	4968	0	2926	7992	0	3002	9072	0	3189	9792	0	3314	11966	0	3697	14314	0	3952	15653	0	4077	18058	0	4313
	24	4896	0	2964	7920	0	3040	8991	0	3252	9706	0	3393	11866	0	3785	14227	0	4104	15566	0	4233	17798	0	4488
(1.2+1.8+3.5)+(2.5+2.5+2.5)	16	5184	0	2812	8208	0	2888	9357	0	3011	10123	0	3093	12326	0	3462	14558	0	3507	15883	0	3602	18331	0	3781
	18	5112	0	2850	8136	0	2926	9268	0	3074	10022	0	3173	12197	0	3549	14486	0	3686	15826	0	3762	18259	0	3960
	20	5040	0	2888	8064	0	2964	9187	0	3124	9936	0	3230	12096	0	3610	14400	0	3800	15480	0	3933	18144	0	4142
	22	4968	0	2926	7992	0	3002	9072	0	3189	9792	0	3314	11966	0	3697	14314	0	3952	15653	0	4077	18058	0	4313
	24	4896	0	2964	7920	0	3040	8991	0	3252	9706	0	3393	11866	0	3785	14227	0	4104	15566	0	4233	17798	0	4488
(1.2+1.8+3.5)+(2.5+2.5+3.5)	16	5184	0	2812	8208	0	2888	9357	0	3011	10123	0	3093	12326	0	3462	14558	0	3507	15883	0	3602	18331	0	3781
	18	5112	0	2850	8136	0	2926	9268	0	3074	10022	0	3173	12197	0	3549	14486	0	3686	15826	0	3762	18259	0	3960
	20	5040	0	2888	8064	0	2964	9187	0	3124	9936	0	3230	12096	0	3610	14400	0	3800	15480	0	3933	18144	0	4142
	22	4968	0	2926	7992	0	3002	9072	0	3189	9792	0	3314	11966	0	3697	14314	0	3952	15653	0	4077	18058	0	4313
	24	4896	0	2964	7920	0	3040	8991	0	3252	9706	0	3393	11866	0	3785	14227	0	4104	15566	0	4233	17798	0	4488
(1.2+1.8+5)+(1.2+1.2+1.2)	16	4536	0	2501	7182	0	2569	8187	0	2678	8858	0	2751	10786	0	3079	12739	0	3120	13898	0	3204	16040	0	3363
	18	4473	0	2535	7119	0	2603	8109	0	2734	8770	0	2822	10672	0	3157	12676	0	3279	13847	0	3346	15977	0	3522
	20	4410	0	2569	7056	0	2636	8039	0	2778	8694	0	2873	10584	0	3211	12600	0	3380	13545	0	3498	15876	0	3684
	22	4347	0	2603	6993	0	2670	7938	0	2836	8568	0	2947	10471	0	3289	12524	0	3515	13696	0	3627	15800	0	3836
	24	4284	0	2636	6930	0	2704	7867	0	2893	8492	0	3018	10382	0	3366	12449	0	3650	13621	0	3765	15574	0	3992

EWB : Evaporator Wet Bulb temperature (°C)

EDB : Evaporator Dry Bulb temperature (°C)

(°CDB) : Outdoor Unit Inlet Air Dry Temperature (°C)

TC : Total Capacity (W)

SHC : Sensible Heating Capacity (W)

PI : Power Input

	INDOOR	OUTDOOR TEMPERATURE (°CDW)																							
	EDB	-15			-10			-7			-5			0			7			10			15		
	°C	TC	SHC	PI	TC	SHC	PI	TC	SHC	PI	TC	SHC	PI	TC	SHC	PI	TC	SHC	PI	TC	SHC	PI	TC	SHC	PI
(1.2+1.8+5)+(1.2+1.2+1.8)	16	4788	0	2575	7581	0	2645	8642	0	2758	9350	0	2833	11385	0	3170	13446	0	3212	14670	0	3299	16931	0	3463
	18	4722	0	2610	7515	0	2680	8560	0	2815	9257	0	2906	11265	0	3250	13380	0	3376	14617	0	3445	16864	0	3626
	20	4655	0	2645	7448	0	2714	8485	0	2861	9177	0	2958	11172	0	3306	13300	0	3480	14298	0	3602	16758	0	3793
	22	4589	0	2680	7382	0	2749	8379	0	2920	9044	0	3035	11052	0	3386	13220	0	3619	14457	0	3734	16678	0	3950
	24	4522	0	2714	7315	0	2784	8305	0	2978	8964	0	3108	10959	0	3466	13140	0	3758	14377	0	3877	16439	0	4110
(1.2+1.8+5)+(1.2+1.2+2.5)	16	5184	0	2812	8208	0	2888	9357	0	3011	10123	0	3093	12326	0	3462	14558	0	3507	15883	0	3602	18331	0	3781
	18	5112	0	2850	8136	0	2926	9268	0	3074	10022	0	3173	12197	0	3549	14486	0	3686	15826	0	3762	18259	0	3960
	20	5040	0	2888	8064	0	2964	9187	0	3124	9936	0	3230	12096	0	3610	14400	0	3800	15480	0	3933	18144	0	4142
	22	4968	0	2926	7992	0	3002	9072	0	3189	9792	0	3314	11966	0	3697	14314	0	3952	15653	0	4077	18058	0	4313
	24	4896	0	2964	7920	0	3040	8991	0	3252	9706	0	3393	11866	0	3785	14227	0	4104	15566	0	4233	17798	0	4488
(1.2+1.8+5)+(1.2+1.2+3.5)	16	5184	0	2812	8208	0	2888	9357	0	3011	10123	0	3093	12326	0	3462	14558	0	3507	15883	0	3602	18331	0	3781
	18	5112	0	2850	8136	0	2926	9268	0	3074	10022	0	3173	12197	0	3549	14486	0	3686	15826	0	3762	18259	0	3960
	20	5040	0	2888	8064	0	2964	9187	0	3124	9936	0	3230	12096	0	3610	14400	0	3800	15480	0	3933	18144	0	4142
	22	4968	0	2926	7992	0	3002	9072	0	3189	9792	0	3314	11966	0	3697	14314	0	3952	15653	0	4077	18058	0	4313
	24	4896	0	2964	7920	0	3040	8991	0	3252	9706	0	3393	11866	0	3785	14227	0	4104	15566	0	4233	17798	0	4488
(1.2+1.8+5)+(1.2+1.2+5)	16	5184	0	2812	8208	0	2888	9357	0	3011	10123	0	3093	12326	0	3462	14558	0	3507	15883	0	3602	18331	0	3781
	18	5112	0	2850	8136	0	2926	9268	0	3074	10022	0	3173	12197	0	3549	14486	0	3686	15826	0	3762	18259	0	3960
	20	5040	0	2888	8064	0	2964	9187	0	3124	9936	0	3230	12096	0	3610	14400	0	3800	15480	0	3933	18144	0	4142
	22	4968	0	2926	7992	0	3002	9072	0	3189	9792	0	3314	11966	0	3697	14314	0	3952	15653	0	4077	18058	0	4313
	24	4896	0	2964	7920	0	3040	8991	0	3252	9706	0	3393	11866	0	3785	14227	0	4104	15566	0	4233	17798	0	4488
(1.2+1.8+5)+(1.2+1.8+1.8)	16	5040	0	2701	7980	0	2774	9097	0	2892	9842	0	2971	11984	0	3325	14154	0	3369	15442	0	3460	17822	0	3632
	18	4970	0	2738	7910	0	2811	9010	0	2953	9744	0	3048	11858	0	3409	14084	0	3541	15386	0	3614	17752	0	3803
	20	4900	0	2774	7840	0	2847	8932	0	3000	9660	0	3103	11760	0	3468	14000	0	3650	15050	0	3778	17640	0	3979
	22	4830	0	2811	7770	0	2884	8820	0	3063	9520	0	3183	11634	0	3551	13916	0	3796	15218	0	3916	17556	0	4143
	24	4760	0	2847	7700	0	2920	8742	0	3124	9436	0	3259	11536	0	3635	13832	0	3942	15134	0	4066	17304	0	4311
(1.2+1.8+5)+(1.2+1.8+2.5)	16	5184	0	2812	8208	0	2888	9357	0	3011	10123	0	3093	12326	0	3462	14558	0	3507	15883	0	3602	18331	0	3781
	18	5112	0	2850	8136	0	2926	9268	0	3074	10022	0	3173	12197	0	3549	14486	0	3686	15826	0	3762	18259	0	3960
	20	5040	0	2888	8064	0	2964	9187	0	3124	9936	0	3230	12096	0	3610	14400	0	3800	15480	0	3933	18144	0	4142
	22	4968	0	2926	7992	0	3002	9072	0	3189	9792	0	3314	11966	0	3697	14314	0	3952	15653	0	4077	18058	0	4313
	24	4896	0	2964	7920	0	3040	8991	0	3252	9706	0	3393	11866	0	3785	14227	0	4104	15566	0	4233	17798	0	4488
(1.2+1.8+5)+(1.2+1.8+3.5)	16	5184	0	2812	8208	0	2888	9357	0	3011	10123	0	3093	12326	0	3462	14558	0	3507	15883	0	3602	18331	0	3781
	18	5112	0	2850	8136	0	2926	9268	0	3074	10022	0	3173	12197	0	3549	14486	0	3686	15826	0	3762	18259	0	3960
	20	5040	0	2888	8064	0	2964	9187	0	3124	9936	0	3230	12096	0	3610	14400	0	3800	15480	0	3933	18144	0	4142
	22	4968	0	2926	7992	0	3002	9072	0	3189	9792	0	3314	11966	0	3697	14314	0	3952	15653	0	4077	18058	0	4313
	24	4896	0	2964	7920	0	3040	8991	0	3252	9706	0	3393	11866	0	3785	14227	0	4104	15566	0	4233	17798	0	4488
(1.2+1.8+5)+(1.2+1.8+5)	16	5184	0	2812	8208	0	2888	9357	0	3011	10123	0	3093	12326	0	3462	14558	0	3507	15883	0	3602	18331	0	3781
	18	5112	0	2850	8136	0	2926	9268	0	3074	10022	0	3173	12197	0	3549	14486	0	3686	15826	0	3762	18259	0	3960
	20	5040	0	2888	8064	0	2964	9187	0	3124	9936	0	3230	12096	0	3610	14400	0	3800	15480	0	3933	18144	0	4142
	22	4968	0	2926	7992	0	3002	9072	0	3189	9792	0	3314	11966	0	3697	14314	0	3952	15653	0	4077	18058	0	4313
	24	4896	0	2964	7920	0	3040	8991	0	3252	9706	0	3393	11866	0	3785	14227	0	4104	15566	0	4233	17798	0	4488

EWB : Evaporator Wet Bulb temperature (°C)

EDB : Evaporator Dry Bulb temperature (°C)

(°CDB) : Outdoor Unit Inlet Air Dry Temperature (°C)

TC : Total Capacity (W)

SHC : Sensible Heating Capacity (W)

PI : Power Input

	INDOOR	OUTDOOR TEMPERATURE (°CDW)																							
	EDB	-15			-10			-7			-5			0			7			10			15		
	°C	TC	SHC	PI	TC	SHC	PI	TC	SHC	PI	TC	SHC	PI	TC	SHC	PI	TC	SHC	PI	TC	SHC	PI	TC	SHC	PI
(1.2+1.8+5)+(1.2+2.5+2.5)	16	5184	0	2812	8208	0	2888	9357	0	3011	10123	0	3093	12326	0	3462	14558	0	3507	15883	0	3602	18331	0	3781
	18	5112	0	2850	8136	0	2926	9268	0	3074	10022	0	3173	12197	0	3549	14486	0	3686	15826	0	3762	18259	0	3960
	20	5040	0	2888	8064	0	2964	9187	0	3124	9936	0	3230	12096	0	3610	14400	0	3800	15480	0	3933	18144	0	4142
	22	4968	0	2926	7992	0	3002	9072	0	3189	9792	0	3314	11966	0	3697	14314	0	3952	15653	0	4077	18058	0	4313
	24	4896	0	2964	7920	0	3040	8991	0	3252	9706	0	3393	11866	0	3785	14227	0	4104	15566	0	4233	17798	0	4488
(1.2+1.8+5)+(1.2+2.5+3.5)	16	5184	0	2812	8208	0	2888	9357	0	3011	10123	0	3093	12326	0	3462	14558	0	3507	15883	0	3602	18331	0	3781
	18	5112	0	2850	8136	0	2926	9268	0	3074	10022	0	3173	12197	0	3549	14486	0	3686	15826	0	3762	18259	0	3960
	20	5040	0	2888	8064	0	2964	9187	0	3124	9936	0	3230	12096	0	3610	14400	0	3800	15480	0	3933	18144	0	4142
	22	4968	0	2926	7992	0	3002	9072	0	3189	9792	0	3314	11966	0	3697	14314	0	3952	15653	0	4077	18058	0	4313
	24	4896	0	2964	7920	0	3040	8991	0	3252	9706	0	3393	11866	0	3785	14227	0	4104	15566	0	4233	17798	0	4488
(1.2+1.8+5)+(1.2+3.5+3.5)	16	5184	0	2812	8208	0	2888	9357	0	3011	10123	0	3093	12326	0	3462	14558	0	3507	15883	0	3602	18331	0	3781
	18	5112	0	2850	8136	0	2926	9268	0	3074	10022	0	3173	12197	0	3549	14486	0	3686	15826	0	3762	18259	0	3960
	20	5040	0	2888	8064	0	2964	9187	0	3124	9936	0	3230	12096	0	3610	14400	0	3800	15480	0	3933	18144	0	4142
	22	4968	0	2926	7992	0	3002	9072	0	3189	9792	0	3314	11966	0	3697	14314	0	3952	15653	0	4077	18058	0	4313
	24	4896	0	2964	7920	0	3040	8991	0	3252	9706	0	3393	11866	0	3785	14227	0	4104	15566	0	4233	17798	0	4488
(1.2+1.8+5)+(1.8+1.8+1.8)	16	5112	0	2775	8093	0	2850	9227	0	2972	9982	0	3053	12154	0	3416	14355	0	3461	15661	0	3555	18075	0	3731
	18	5041	0	2813	8022	0	2888	9138	0	3034	9883	0	3131	12027	0	3503	14284	0	3638	15605	0	3713	18004	0	3908
	20	4970	0	2850	7951	0	2925	9059	0	3083	9797	0	3188	11927	0	3563	14199	0	3750	15264	0	3881	17891	0	4088
	22	4899	0	2888	7880	0	2963	8945	0	3147	9655	0	3270	11799	0	3649	14114	0	3900	15434	0	4024	17806	0	4256
	24	4828	0	2925	7809	0	3000	8866	0	3209	9570	0	3349	11700	0	3735	14029	0	4050	15349	0	4178	17550	0	4429
(1.2+1.8+5)+(1.8+1.8+2.5)	16	5184	0	2812	8208	0	2888	9357	0	3011	10123	0	3093	12326	0	3462	14558	0	3507	15883	0	3602	18331	0	3781
	18	5112	0	2850	8136	0	2926	9268	0	3074	10022	0	3173	12197	0	3549	14486	0	3686	15826	0	3762	18259	0	3960
	20	5040	0	2888	8064	0	2964	9187	0	3124	9936	0	3230	12096	0	3610	14400	0	3800	15480	0	3933	18144	0	4142
	22	4968	0	2926	7992	0	3002	9072	0	3189	9792	0	3314	11966	0	3697	14314	0	3952	15653	0	4077	18058	0	4313
	24	4896	0	2964	7920	0	3040	8991	0	3252	9706	0	3393	11866	0	3785	14227	0	4104	15566	0	4233	17798	0	4488
(1.2+1.8+5)+(1.8+1.8+3.5)	16	5184	0	2812	8208	0	2888	9357	0	3011	10123	0	3093	12326	0	3462	14558	0	3507	15883	0	3602	18331	0	3781
	18	5112	0	2850	8136	0	2926	9268	0	3074	10022	0	3173	12197	0	3549	14486	0	3686	15826	0	3762	18259	0	3960
	20	5040	0	2888	8064	0	2964	9187	0	3124	9936	0	3230	12096	0	3610	14400	0	3800	15480	0	3933	18144	0	4142
	22	4968	0	2926	7992	0	3002	9072	0	3189	9792	0	3314	11966	0	3697	14314	0	3952	15653	0	4077	18058	0	4313
	24	4896	0	2964	7920	0	3040	8991	0	3252	9706	0	3393	11866	0	3785	14227	0	4104	15566	0	4233	17798	0	4488
(1.2+1.8+5)+(1.8+1.8+5)	16	5184	0	2812	8208	0	2888	9357	0	3011	10123	0	3093	12326	0	3462	14558	0	3507	15883	0	3602	18331	0	3781
	18	5112	0	2850	8136	0	2926	9268	0	3074	10022	0	3173	12197	0	3549	14486	0	3686	15826	0	3762	18259	0	3960
	20	5040	0	2888	8064	0	2964	9187	0	3124	9936	0	3230	12096	0	3610	14400	0	3800	15480	0	3933	18144	0	4142
	22	4968	0	2926	7992	0	3002	9072	0	3189	9792	0	3314	11966	0	3697	14314	0	3952	15653	0	4077	18058	0	4313
	24	4896	0	2964	7920	0	3040	8991	0	3252	9706	0	3393	11866	0	3785	14227	0	4104	15566	0	4233	17798	0	4488
(1.2+1.8+5)+(1.8+2.5+2.5)	16	5184	0	2812	8208	0	2888	9357	0	3011	10123	0	3093	12326	0	3462	14558	0	3507	15883	0	3602	18331	0	3781
	18	5112	0	2850	8136	0	2926	9268	0	3074	10022	0	3173	12197	0	3549	14486	0	3686	15826	0	3762	18259	0	3960
	20	5040	0	2888	8064	0	2964	9187	0	3124	9936	0	3230	12096	0	3610	14400	0	3800	15480	0	3933	18144	0	4142
	22	4968	0	2926	7992	0	3002	9072	0	3189	9792	0	3314	11966	0	3697	14314	0	3952	15653	0	4077	18058	0	4313
	24	4896	0	2964	7920	0	3040	8991	0	3252	9706	0	3393	11866	0	3785	14227	0	4104	15566	0	4233	17798	0	4488

EWB : Evaporator Wet Bulb temperature (°C)

EDB : Evaporator Dry Bulb temperature (°C)

(°CDB) : Outdoor Unit Inlet Air Dry Temperature (°C)

TC : Total Capacity (W)

SHC : Sensible Heating Capacity (W)

PI : Power Input

	INDOOR	OUTDOOR TEMPERATURE (°CDW)																							
	EDB	-15			-10			-7			-5			0			7			10			15		
	°C	TC	SHC	PI	TC	SHC	PI	TC	SHC	PI	TC	SHC	PI	TC	SHC	PI	TC	SHC	PI	TC	SHC	PI	TC	SHC	PI
(1.2+1.8+5)+(1.8+2.5+3.5)	16	5184	0	2812	8208	0	2888	9357	0	3011	10123	0	3093	12326	0	3462	14558	0	3507	15883	0	3602	18331	0	3781
	18	5112	0	2850	8136	0	2926	9268	0	3074	10022	0	3173	12197	0	3549	14486	0	3686	15826	0	3762	18259	0	3960
	20	5040	0	2888	8064	0	2964	9187	0	3124	9936	0	3230	12096	0	3610	14400	0	3800	15480	0	3933	18144	0	4142
	22	4968	0	2926	7992	0	3002	9072	0	3189	9792	0	3314	11966	0	3697	14314	0	3952	15653	0	4077	18058	0	4313
	24	4896	0	2964	7920	0	3040	8991	0	3252	9706	0	3393	11866	0	3785	14227	0	4104	15566	0	4233	17798	0	4488
(1.2+1.8+5)+(1.8+3.5+3.5)	16	5184	0	2812	8208	0	2888	9357	0	3011	10123	0	3093	12326	0	3462	14558	0	3507	15883	0	3602	18331	0	3781
	18	5112	0	2850	8136	0	2926	9268	0	3074	10022	0	3173	12197	0	3549	14486	0	3686	15826	0	3762	18259	0	3960
	20	5040	0	2888	8064	0	2964	9187	0	3124	9936	0	3230	12096	0	3610	14400	0	3800	15480	0	3933	18144	0	4142
	22	4968	0	2926	7992	0	3002	9072	0	3189	9792	0	3314	11966	0	3697	14314	0	3952	15653	0	4077	18058	0	4313
	24	4896	0	2964	7920	0	3040	8991	0	3252	9706	0	3393	11866	0	3785	14227	0	4104	15566	0	4233	17798	0	4488
(1.2+1.8+5)+(2.5+2.5+2.5)	16	5184	0	2812	8208	0	2888	9357	0	3011	10123	0	3093	12326	0	3462	14558	0	3507	15883	0	3602	18331	0	3781
	18	5112	0	2850	8136	0	2926	9268	0	3074	10022	0	3173	12197	0	3549	14486	0	3686	15826	0	3762	18259	0	3960
	20	5040	0	2888	8064	0	2964	9187	0	3124	9936	0	3230	12096	0	3610	14400	0	3800	15480	0	3933	18144	0	4142
	22	4968	0	2926	7992	0	3002	9072	0	3189	9792	0	3314	11966	0	3697	14314	0	3952	15653	0	4077	18058	0	4313
	24	4896	0	2964	7920	0	3040	8991	0	3252	9706	0	3393	11866	0	3785	14227	0	4104	15566	0	4233	17798	0	4488
(1.2+1.8+5)+(2.5+2.5+3.5)	16	5184	0	2812	8208	0	2888	9357	0	3011	10123	0	3093	12326	0	3462	14558	0	3507	15883	0	3602	18331	0	3781
	18	5112	0	2850	8136	0	2926	9268	0	3074	10022	0	3173	12197	0	3549	14486	0	3686	15826	0	3762	18259	0	3960
	20	5040	0	2888	8064	0	2964	9187	0	3124	9936	0	3230	12096	0	3610	14400	0	3800	15480	0	3933	18144	0	4142
	22	4968	0	2926	7992	0	3002	9072	0	3189	9792	0	3314	11966	0	3697	14314	0	3952	15653	0	4077	18058	0	4313
	24	4896	0	2964	7920	0	3040	8991	0	3252	9706	0	3393	11866	0	3785	14227	0	4104	15566	0	4233	17798	0	4488
(1.2+2.5+2.5)+(1.2+1.2+1.2)	16	4536	0	2501	7182	0	2569	8187	0	2678	8858	0	2751	10786	0	3079	12739	0	3120	13898	0	3204	16040	0	3363
	18	4473	0	2535	7119	0	2603	8109	0	2734	8770	0	2822	10672	0	3157	12676	0	3279	13847	0	3346	15977	0	3522
	20	4410	0	2569	7056	0	2636	8039	0	2778	8694	0	2873	10584	0	3211	12600	0	3380	13545	0	3498	15876	0	3684
	22	4347	0	2603	6993	0	2670	7938	0	2836	8568	0	2947	10471	0	3289	12524	0	3515	13696	0	3627	15800	0	3836
	24	4284	0	2636	6930	0	2704	7867	0	2893	8492	0	3018	10382	0	3366	12449	0	3650	13621	0	3765	15574	0	3992
(1.2+2.5+2.5)+(1.2+1.2+1.8)	16	4788	0	2575	7581	0	2645	8642	0	2758	9350	0	2833	11385	0	3170	13446	0	3212	14670	0	3299	16931	0	3463
	18	4722	0	2610	7515	0	2680	8560	0	2815	9257	0	2906	11265	0	3250	13380	0	3376	14617	0	3445	16864	0	3626
	20	4655	0	2645	7448	0	2714	8485	0	2861	9177	0	2958	11172	0	3306	13300	0	3480	14298	0	3602	16758	0	3793
	22	4589	0	2680	7382	0	2749	8379	0	2920	9044	0	3035	11052	0	3386	13220	0	3619	14457	0	3734	16678	0	3950
	24	4522	0	2714	7315	0	2784	8305	0	2978	8964	0	3108	10959	0	3466	13140	0	3758	14377	0	3877	16439	0	4110
(1.2+2.5+2.5)+(1.2+1.2+2.5)	16	5184	0	2812	8208	0	2888	9357	0	3011	10123	0	3093	12326	0	3462	14558	0	3507	15883	0	3602	18331	0	3781
	18	5112	0	2850	8136	0	2926	9268	0	3074	10022	0	3173	12197	0	3549	14486	0	3686	15826	0	3762	18259	0	3960
	20	5040	0	2888	8064	0	2964	9187	0	3124	9936	0	3230	12096	0	3610	14400	0	3800	15480	0	3933	18144	0	4142
	22	4968	0	2926	7992	0	3002	9072	0	3189	9792	0	3314	11966	0	3697	14314	0	3952	15653	0	4077	18058	0	4313
	24	4896	0	2964	7920	0	3040	8991	0	3252	9706	0	3393	11866	0	3785	14227	0	4104	15566	0	4233	17798	0	4488
(1.2+2.5+2.5)+(1.2+1.2+3.5)	16	5184	0	2812	8208	0	2888	9357	0	3011	10123	0	3093	12326	0	3462	14558	0	3507	15883	0	3602	18331	0	3781
	18	5112	0	2850	8136	0	2926	9268	0	3074	10022	0	3173	12197	0	3549	14486	0	3686	15826	0	3762	18259	0	3960
	20	5040	0	2888	8064	0	2964	9187	0	3124	9936	0	3230	12096	0	3610	14400	0	3800	15480	0	3933	18144	0	4142
	22	4968	0	2926	7992	0	3002	9072	0	3189	9792	0	3314	11966	0	3697	14314	0	3952	15653	0	4077	18058	0	4313
	24	4896	0	2964	7920	0	3040	8991	0	3252	9706	0	3393	11866	0	3785	14227	0	4104	15566	0	4233	17798	0	4488

EWB : Evaporator Wet Bulb temperature (°C)

EDB : Evaporator Dry Bulb temperature (°C)

(°CDB) : Outdoor Unit Inlet Air Dry Temperature (°C)

TC : Total Capacity (W)

SHC : Sensible Heating Capacity (W)

PI : Power Input

	INDOOR	OUTDOOR TEMPERATURE (°CDW)																							
	EDB	-15			-10			-7			-5			0			7			10			15		
	°C	TC	SHC	PI	TC	SHC	PI	TC	SHC	PI	TC	SHC	PI	TC	SHC	PI	TC	SHC	PI	TC	SHC	PI	TC	SHC	PI
(1.2+2.5+2.5) +(1.2+1.2+5)	16	5184	0	2812	8208	0	2888	9357	0	3011	10123	0	3093	12326	0	3462	14558	0	3507	15883	0	3602	18331	0	3781
	18	5112	0	2850	8136	0	2926	9268	0	3074	10022	0	3173	12197	0	3549	14486	0	3686	15826	0	3762	18259	0	3960
	20	5040	0	2888	8064	0	2964	9187	0	3124	9936	0	3230	12096	0	3610	14400	0	3800	15480	0	3933	18144	0	4142
	22	4968	0	2926	7992	0	3002	9072	0	3189	9792	0	3314	11966	0	3697	14314	0	3952	15653	0	4077	18058	0	4313
	24	4896	0	2964	7920	0	3040	8991	0	3252	9706	0	3393	11866	0	3785	14227	0	4104	15566	0	4233	17798	0	4488
(1.2+2.5+2.5) +(1.2+1.8+1.8)	16	5040	0	2701	7980	0	2774	9097	0	2892	9842	0	2971	11984	0	3325	14154	0	3369	15442	0	3460	17822	0	3632
	18	4970	0	2738	7910	0	2811	9010	0	2953	9744	0	3048	11858	0	3409	14084	0	3541	15386	0	3614	17752	0	3803
	20	4900	0	2774	7840	0	2847	8932	0	3000	9660	0	3103	11760	0	3468	14000	0	3650	15050	0	3778	17640	0	3979
	22	4830	0	2811	7770	0	2884	8820	0	3063	9520	0	3183	11634	0	3551	13916	0	3796	15218	0	3916	17556	0	4143
	24	4760	0	2847	7700	0	2920	8742	0	3124	9436	0	3259	11536	0	3635	13832	0	3942	15134	0	4066	17304	0	4311
(1.2+2.5+2.5) +(1.2+1.8+2.5)	16	5184	0	2812	8208	0	2888	9357	0	3011	10123	0	3093	12326	0	3462	14558	0	3507	15883	0	3602	18331	0	3781
	18	5112	0	2850	8136	0	2926	9268	0	3074	10022	0	3173	12197	0	3549	14486	0	3686	15826	0	3762	18259	0	3960
	20	5040	0	2888	8064	0	2964	9187	0	3124	9936	0	3230	12096	0	3610	14400	0	3800	15480	0	3933	18144	0	4142
	22	4968	0	2926	7992	0	3002	9072	0	3189	9792	0	3314	11966	0	3697	14314	0	3952	15653	0	4077	18058	0	4313
	24	4896	0	2964	7920	0	3040	8991	0	3252	9706	0	3393	11866	0	3785	14227	0	4104	15566	0	4233	17798	0	4488
(1.2+2.5+2.5) +(1.2+1.8+3.5)	16	5184	0	2812	8208	0	2888	9357	0	3011	10123	0	3093	12326	0	3462	14558	0	3507	15883	0	3602	18331	0	3781
	18	5112	0	2850	8136	0	2926	9268	0	3074	10022	0	3173	12197	0	3549	14486	0	3686	15826	0	3762	18259	0	3960
	20	5040	0	2888	8064	0	2964	9187	0	3124	9936	0	3230	12096	0	3610	14400	0	3800	15480	0	3933	18144	0	4142
	22	4968	0	2926	7992	0	3002	9072	0	3189	9792	0	3314	11966	0	3697	14314	0	3952	15653	0	4077	18058	0	4313
	24	4896	0	2964	7920	0	3040	8991	0	3252	9706	0	3393	11866	0	3785	14227	0	4104	15566	0	4233	17798	0	4488
(1.2+2.5+2.5) +(1.2+1.8+5)	16	5184	0	2812	8208	0	2888	9357	0	3011	10123	0	3093	12326	0	3462	14558	0	3507	15883	0	3602	18331	0	3781
	18	5112	0	2850	8136	0	2926	9268	0	3074	10022	0	3173	12197	0	3549	14486	0	3686	15826	0	3762	18259	0	3960
	20	5040	0	2888	8064	0	2964	9187	0	3124	9936	0	3230	12096	0	3610	14400	0	3800	15480	0	3933	18144	0	4142
	22	4968	0	2926	7992	0	3002	9072	0	3189	9792	0	3314	11966	0	3697	14314	0	3952	15653	0	4077	18058	0	4313
	24	4896	0	2964	7920	0	3040	8991	0	3252	9706	0	3393	11866	0	3785	14227	0	4104	15566	0	4233	17798	0	4488
(1.2+2.5+2.5) +(1.2+2.5+2.5)	16	5184	0	2812	8208	0	2888	9357	0	3011	10123	0	3093	12326	0	3462	14558	0	3507	15883	0	3602	18331	0	3781
	18	5112	0	2850	8136	0	2926	9268	0	3074	10022	0	3173	12197	0	3549	14486	0	3686	15826	0	3762	18259	0	3960
	20	5040	0	2888	8064	0	2964	9187	0	3124	9936	0	3230	12096	0	3610	14400	0	3800	15480	0	3933	18144	0	4142
	22	4968	0	2926	7992	0	3002	9072	0	3189	9792	0	3314	11966	0	3697	14314	0	3952	15653	0	4077	18058	0	4313
	24	4896	0	2964	7920	0	3040	8991	0	3252	9706	0	3393	11866	0	3785	14227	0	4104	15566	0	4233	17798	0	4488
(1.2+2.5+2.5) +(1.2+2.5+3.5)	16	5184	0	2812	8208	0	2888	9357	0	3011	10123	0	3093	12326	0	3462	14558	0	3507	15883	0	3602	18331	0	3781
	18	5112	0	2850	8136	0	2926	9268	0	3074	10022	0	3173	12197	0	3549	14486	0	3686	15826	0	3762	18259	0	3960
	20	5040	0	2888	8064	0	2964	9187	0	3124	9936	0	3230	12096	0	3610	14400	0	3800	15480	0	3933	18144	0	4142
	22	4968	0	2926	7992	0	3002	9072	0	3189	9792	0	3314	11966	0	3697	14314	0	3952	15653	0	4077	18058	0	4313
	24	4896	0	2964	7920	0	3040	8991	0	3252	9706	0	3393	11866	0	3785	14227	0	4104	15566	0	4233	17798	0	4488
(1.2+2.5+2.5) +(1.2+3.5+3.5)	16	5184	0	2812	8208	0	2888	9357	0	3011	10123	0	3093	12326	0	3462	14558	0	3507	15883	0	3602	18331	0	3781
	18	5112	0	2850	8136	0	2926	9268	0	3074	10022	0	3173	12197	0	3549	14486	0	3686	15826	0	3762	18259	0	3960
	20	5040	0	2888	8064	0	2964	9187	0	3124	9936	0	3230	12096	0	3610	14400	0	3800	15480	0	3933	18144	0	4142
	22	4968	0	2926	7992	0	3002	9072	0	3189	9792	0	3314	11966	0	3697	14314	0	3952	15653	0	4077	18058	0	4313
	24	4896	0	2964	7920	0	3040	8991	0	3252	9706	0	3393	11866	0	3785	14227	0	4104	15566	0	4233	17798	0	4488

EWB : Evaporator Wet Bulb temperature (°C)

EDB : Evaporator Dry Bulb temperature (°C)

(°CDB) : Outdoor Unit Inlet Air Dry Temperature (°C)

TC : Total Capacity (W)

SHC : Sensible Heating Capacity (W)

PI : Power Input

	INDOOR	OUTDOOR TEMPERATURE (°CDW)																							
	EDB	-15			-10			-7			-5			0			7			10			15		
	°C	TC	SHC	PI	TC	SHC	PI	TC	SHC	PI	TC	SHC	PI	TC	SHC	PI	TC	SHC	PI	TC	SHC	PI	TC	SHC	PI
(1.2+2.5+2.5) +(1.8+1.8+1.8)	16	5112	0	2775	8093	0	2850	9227	0	2972	9982	0	3053	12154	0	3416	14355	0	3461	15661	0	3555	18075	0	3731
	18	5041	0	2813	8022	0	2888	9138	0	3034	9883	0	3131	12027	0	3503	14284	0	3638	15605	0	3713	18004	0	3908
	20	4970	0	2850	7951	0	2925	9059	0	3083	9797	0	3188	11927	0	3563	14199	0	3750	15264	0	3881	17891	0	4088
	22	4899	0	2888	7880	0	2963	8945	0	3147	9655	0	3270	11799	0	3649	14114	0	3900	15434	0	4024	17806	0	4256
	24	4828	0	2925	7809	0	3000	8866	0	3209	9570	0	3349	11700	0	3735	14029	0	4050	15349	0	4178	17550	0	4429
(1.2+2.5+2.5) +(1.8+1.8+2.5)	16	5184	0	2812	8208	0	2888	9357	0	3011	10123	0	3093	12326	0	3462	14558	0	3507	15883	0	3602	18331	0	3781
	18	5112	0	2850	8136	0	2926	9268	0	3074	10022	0	3173	12197	0	3549	14486	0	3686	15826	0	3762	18259	0	3960
	20	5040	0	2888	8064	0	2964	9187	0	3124	9936	0	3230	12096	0	3610	14400	0	3800	15480	0	3933	18144	0	4142
	22	4968	0	2926	7992	0	3002	9072	0	3189	9792	0	3314	11966	0	3697	14314	0	3952	15653	0	4077	18058	0	4313
	24	4896	0	2964	7920	0	3040	8991	0	3252	9706	0	3393	11866	0	3785	14227	0	4104	15566	0	4233	17798	0	4488
(1.2+2.5+2.5) +(1.8+1.8+3.5)	16	5184	0	2812	8208	0	2888	9357	0	3011	10123	0	3093	12326	0	3462	14558	0	3507	15883	0	3602	18331	0	3781
	18	5112	0	2850	8136	0	2926	9268	0	3074	10022	0	3173	12197	0	3549	14486	0	3686	15826	0	3762	18259	0	3960
	20	5040	0	2888	8064	0	2964	9187	0	3124	9936	0	3230	12096	0	3610	14400	0	3800	15480	0	3933	18144	0	4142
	22	4968	0	2926	7992	0	3002	9072	0	3189	9792	0	3314	11966	0	3697	14314	0	3952	15653	0	4077	18058	0	4313
	24	4896	0	2964	7920	0	3040	8991	0	3252	9706	0	3393	11866	0	3785	14227	0	4104	15566	0	4233	17798	0	4488
(1.2+2.5+2.5) +(1.8+1.8+5)	16	5184	0	2812	8208	0	2888	9357	0	3011	10123	0	3093	12326	0	3462	14558	0	3507	15883	0	3602	18331	0	3781
	18	5112	0	2850	8136	0	2926	9268	0	3074	10022	0	3173	12197	0	3549	14486	0	3686	15826	0	3762	18259	0	3960
	20	5040	0	2888	8064	0	2964	9187	0	3124	9936	0	3230	12096	0	3610	14400	0	3800	15480	0	3933	18144	0	4142
	22	4968	0	2926	7992	0	3002	9072	0	3189	9792	0	3314	11966	0	3697	14314	0	3952	15653	0	4077	18058	0	4313
	24	4896	0	2964	7920	0	3040	8991	0	3252	9706	0	3393	11866	0	3785	14227	0	4104	15566	0	4233	17798	0	4488
(1.2+2.5+2.5) +(1.8+2.5+2.5)	16	5184	0	2812	8208	0	2888	9357	0	3011	10123	0	3093	12326	0	3462	14558	0	3507	15883	0	3602	18331	0	3781
	18	5112	0	2850	8136	0	2926	9268	0	3074	10022	0	3173	12197	0	3549	14486	0	3686	15826	0	3762	18259	0	3960
	20	5040	0	2888	8064	0	2964	9187	0	3124	9936	0	3230	12096	0	3610	14400	0	3800	15480	0	3933	18144	0	4142
	22	4968	0	2926	7992	0	3002	9072	0	3189	9792	0	3314	11966	0	3697	14314	0	3952	15653	0	4077	18058	0	4313
	24	4896	0	2964	7920	0	3040	8991	0	3252	9706	0	3393	11866	0	3785	14227	0	4104	15566	0	4233	17798	0	4488
(1.2+2.5+2.5) +(1.8+2.5+3.5)	16	5184	0	2812	8208	0	2888	9357	0	3011	10123	0	3093	12326	0	3462	14558	0	3507	15883	0	3602	18331	0	3781
	18	5112	0	2850	8136	0	2926	9268	0	3074	10022	0	3173	12197	0	3549	14486	0	3686	15826	0	3762	18259	0	3960
	20	5040	0	2888	8064	0	2964	9187	0	3124	9936	0	3230	12096	0	3610	14400	0	3800	15480	0	3933	18144	0	4142
	22	4968	0	2926	7992	0	3002	9072	0	3189	9792	0	3314	11966	0	3697	14314	0	3952	15653	0	4077	18058	0	4313
	24	4896	0	2964	7920	0	3040	8991	0	3252	9706	0	3393	11866	0	3785	14227	0	4104	15566	0	4233	17798	0	4488
(1.2+2.5+2.5) +(1.8+3.5+3.5)	16	5184	0	2812	8208	0	2888	9357	0	3011	10123	0	3093	12326	0	3462	14558	0	3507	15883	0	3602	18331	0	3781
	18	5112	0	2850	8136	0	2926	9268	0	3074	10022	0	3173	12197	0	3549	14486	0	3686	15826	0	3762	18259	0	3960
	20	5040	0	2888	8064	0	2964	9187	0	3124	9936	0	3230	12096	0	3610	14400	0	3800	15480	0	3933	18144	0	4142
	22	4968	0	2926	7992	0	3002	9072	0	3189	9792	0	3314	11966	0	3697	14314	0	3952	15653	0	4077	18058	0	4313
	24	4896	0	2964	7920	0	3040	8991	0	3252	9706	0	3393	11866	0	3785	14227	0	4104	15566	0	4233	17798	0	4488
(1.2+2.5+2.5) +(2.5+2.5+2.5)	16	5184	0	2812	8208	0	2888	9357	0	3011	10123	0	3093	12326	0	3462	14558	0	3507	15883	0	3602	18331	0	3781
	18	5112	0	2850	8136	0	2926	9268	0	3074	10022	0	3173	12197	0	3549	14486	0	3686	15826	0	3762	18259	0	3960
	20	5040	0	2888	8064	0	2964	9187	0	3124	9936	0	3230	12096	0	3610	14400	0	3800	15480	0	3933	18144	0	4142
	22	4968	0	2926	7992	0	3002	9072	0	3189	9792	0	3314	11966	0	3697	14314	0	3952	15653	0	4077	18058	0	4313
	24	4896	0	2964	7920	0	3040	8991	0	3252	9706	0	3393	11866	0	3785	14227	0	4104	15566	0	4233	17798	0	4488

EWB : Evaporator Wet Bulb temperature (°C)

EDB : Evaporator Dry Bulb temperature (°C)

(°CDB) : Outdoor Unit Inlet Air Dry Temperature (°C)

TC : Total Capacity (W)

SHC : Sensible Heating Capacity (W)

PI : Power Input

	INDOOR	OUTDOOR TEMPERATURE (°CDW)																							
	EDB	-15			-10			-7			-5			0			7			10			15		
	°C	TC	SHC	PI	TC	SHC	PI	TC	SHC	PI	TC	SHC	PI	TC	SHC	PI	TC	SHC	PI	TC	SHC	PI	TC	SHC	PI
(1.2+2.5+2.5) +(2.5+2.5+3.5)	16	5184	0	2812	8208	0	2888	9357	0	3011	10123	0	3093	12326	0	3462	14558	0	3507	15883	0	3602	18331	0	3781
	18	5112	0	2850	8136	0	2926	9268	0	3074	10022	0	3173	12197	0	3549	14486	0	3686	15826	0	3762	18259	0	3960
	20	5040	0	2888	8064	0	2964	9187	0	3124	9936	0	3230	12096	0	3610	14400	0	3800	15480	0	3933	18144	0	4142
	22	4968	0	2926	7992	0	3002	9072	0	3189	9792	0	3314	11966	0	3697	14314	0	3952	15653	0	4077	18058	0	4313
	24	4896	0	2964	7920	0	3040	8991	0	3252	9706	0	3393	11866	0	3785	14227	0	4104	15566	0	4233	17798	0	4488
(1.2+2.5+3.5) +(1.2+1.2+1.2)	16	4536	0	2501	7182	0	2569	8187	0	2678	8858	0	2751	10786	0	3079	12739	0	3120	13898	0	3204	16040	0	3363
	18	4473	0	2535	7119	0	2603	8109	0	2734	8770	0	2822	10672	0	3157	12676	0	3279	13847	0	3346	15977	0	3522
	20	4410	0	2569	7056	0	2636	8039	0	2778	8694	0	2873	10584	0	3211	12600	0	3380	13545	0	3498	15876	0	3684
	22	4347	0	2603	6993	0	2670	7938	0	2836	8568	0	2947	10471	0	3289	12524	0	3515	13696	0	3627	15800	0	3836
	24	4284	0	2636	6930	0	2704	7867	0	2893	8492	0	3018	10382	0	3366	12449	0	3650	13621	0	3765	15574	0	3992
(1.2+2.5+3.5) +(1.2+1.2+1.8)	16	4788	0	2575	7581	0	2645	8642	0	2758	9350	0	2833	11385	0	3170	13446	0	3212	14670	0	3299	16931	0	3463
	18	4722	0	2610	7515	0	2680	8560	0	2815	9257	0	2906	11265	0	3250	13380	0	3376	14617	0	3445	16864	0	3626
	20	4655	0	2645	7448	0	2714	8485	0	2861	9177	0	2958	11172	0	3306	13300	0	3480	14298	0	3602	16758	0	3793
	22	4589	0	2680	7382	0	2749	8379	0	2920	9044	0	3035	11052	0	3386	13220	0	3619	14457	0	3734	16678	0	3950
	24	4522	0	2714	7315	0	2784	8305	0	2978	8964	0	3108	10959	0	3466	13140	0	3758	14377	0	3877	16439	0	4110
(1.2+2.5+3.5) +(1.2+1.2+2.5)	16	5184	0	2812	8208	0	2888	9357	0	3011	10123	0	3093	12326	0	3462	14558	0	3507	15883	0	3602	18331	0	3781
	18	5112	0	2850	8136	0	2926	9268	0	3074	10022	0	3173	12197	0	3549	14486	0	3686	15826	0	3762	18259	0	3960
	20	5040	0	2888	8064	0	2964	9187	0	3124	9936	0	3230	12096	0	3610	14400	0	3800	15480	0	3933	18144	0	4142
	22	4968	0	2926	7992	0	3002	9072	0	3189	9792	0	3314	11966	0	3697	14314	0	3952	15653	0	4077	18058	0	4313
	24	4896	0	2964	7920	0	3040	8991	0	3252	9706	0	3393	11866	0	3785	14227	0	4104	15566	0	4233	17798	0	4488
(1.2+2.5+3.5) +(1.2+1.2+3.5)	16	5184	0	2812	8208	0	2888	9357	0	3011	10123	0	3093	12326	0	3462	14558	0	3507	15883	0	3602	18331	0	3781
	18	5112	0	2850	8136	0	2926	9268	0	3074	10022	0	3173	12197	0	3549	14486	0	3686	15826	0	3762	18259	0	3960
	20	5040	0	2888	8064	0	2964	9187	0	3124	9936	0	3230	12096	0	3610	14400	0	3800	15480	0	3933	18144	0	4142
	22	4968	0	2926	7992	0	3002	9072	0	3189	9792	0	3314	11966	0	3697	14314	0	3952	15653	0	4077	18058	0	4313
	24	4896	0	2964	7920	0	3040	8991	0	3252	9706	0	3393	11866	0	3785	14227	0	4104	15566	0	4233	17798	0	4488
(1.2+2.5+3.5) +(1.2+1.2+5)	16	5184	0	2812	8208	0	2888	9357	0	3011	10123	0	3093	12326	0	3462	14558	0	3507	15883	0	3602	18331	0	3781
	18	5112	0	2850	8136	0	2926	9268	0	3074	10022	0	3173	12197	0	3549	14486	0	3686	15826	0	3762	18259	0	3960
	20	5040	0	2888	8064	0	2964	9187	0	3124	9936	0	3230	12096	0	3610	14400	0	3800	15480	0	3933	18144	0	4142
	22	4968	0	2926	7992	0	3002	9072	0	3189	9792	0	3314	11966	0	3697	14314	0	3952	15653	0	4077	18058	0	4313
	24	4896	0	2964	7920	0	3040	8991	0	3252	9706	0	3393	11866	0	3785	14227	0	4104	15566	0	4233	17798	0	4488
(1.2+2.5+3.5) +(1.2+1.8+1.8)	16	5040	0	2701	7980	0	2774	9097	0	2892	9842	0	2971	11984	0	3325	14154	0	3369	15442	0	3460	17822	0	3632
	18	4970	0	2738	7910	0	2811	9010	0	2953	9744	0	3048	11858	0	3409	14084	0	3541	15386	0	3614	17752	0	3803
	20	4900	0	2774	7840	0	2847	8932	0	3000	9660	0	3103	11760	0	3468	14000	0	3650	15050	0	3778	17640	0	3979
	22	4830	0	2811	7770	0	2884	8820	0	3063	9520	0	3183	11634	0	3551	13916	0	3796	15218	0	3916	17556	0	4143
	24	4760	0	2847	7700	0	2920	8742	0	3124	9436	0	3259	11536	0	3635	13832	0	3942	15134	0	4066	17304	0	4311
(1.2+2.5+3.5) +(1.2+1.8+2.5)	16	5184	0	2812	8208	0	2888	9357	0	3011	10123	0	3093	12326	0	3462	14558	0	3507	15883	0	3602	18331	0	3781
	18	5112	0	2850	8136	0	2926	9268	0	3074	10022	0	3173	12197	0	3549	14486	0	3686	15826	0	3762	18259	0	3960
	20	5040	0	2888	8064	0	2964	9187	0	3124	9936	0	3230	12096	0	3610	14400	0	3800	15480	0	3933	18144	0	4142
	22	4968	0	2926	7992	0	3002	9072	0	3189	9792	0	3314	11966	0	3697	14314	0	3952	15653	0	4077	18058	0	4313
	24	4896	0	2964	7920	0	3040	8991	0	3252	9706	0	3393	11866	0	3785	14227	0	4104	15566	0	4233	17798	0	4488

EWB : Evaporator Wet Bulb temperature (°C)

EDB : Evaporator Dry Bulb temperature (°C)

(°CDB) : Outdoor Unit Inlet Air Dry Temperature (°C)

TC : Total Capacity (W)

SHC : Sensible Heating Capacity (W)

PI : Power Input

	INDOOR	OUTDOOR TEMPERATURE (°CDW)																							
	EDB	-15			-10			-7			-5			0			7			10			15		
	°C	TC	SHC	PI	TC	SHC	PI	TC	SHC	PI	TC	SHC	PI	TC	SHC	PI	TC	SHC	PI	TC	SHC	PI	TC	SHC	PI
(1.2+2.5+3.5)+(1.2+1.8+3.5)	16	5184	0	2812	8208	0	2888	9357	0	3011	10123	0	3093	12326	0	3462	14558	0	3507	15883	0	3602	18331	0	3781
	18	5112	0	2850	8136	0	2926	9268	0	3074	10022	0	3173	12197	0	3549	14486	0	3686	15826	0	3762	18259	0	3960
	20	5040	0	2888	8064	0	2964	9187	0	3124	9936	0	3230	12096	0	3610	14400	0	3800	15480	0	3933	18144	0	4142
	22	4968	0	2926	7992	0	3002	9072	0	3189	9792	0	3314	11966	0	3697	14314	0	3952	15653	0	4077	18058	0	4313
	24	4896	0	2964	7920	0	3040	8991	0	3252	9706	0	3393	11866	0	3785	14227	0	4104	15566	0	4233	17798	0	4488
(1.2+2.5+3.5)+(1.2+1.8+5)	16	5184	0	2812	8208	0	2888	9357	0	3011	10123	0	3093	12326	0	3462	14558	0	3507	15883	0	3602	18331	0	3781
	18	5112	0	2850	8136	0	2926	9268	0	3074	10022	0	3173	12197	0	3549	14486	0	3686	15826	0	3762	18259	0	3960
	20	5040	0	2888	8064	0	2964	9187	0	3124	9936	0	3230	12096	0	3610	14400	0	3800	15480	0	3933	18144	0	4142
	22	4968	0	2926	7992	0	3002	9072	0	3189	9792	0	3314	11966	0	3697	14314	0	3952	15653	0	4077	18058	0	4313
	24	4896	0	2964	7920	0	3040	8991	0	3252	9706	0	3393	11866	0	3785	14227	0	4104	15566	0	4233	17798	0	4488
(1.2+2.5+3.5)+(1.2+2.5+2.5)	16	5184	0	2812	8208	0	2888	9357	0	3011	10123	0	3093	12326	0	3462	14558	0	3507	15883	0	3602	18331	0	3781
	18	5112	0	2850	8136	0	2926	9268	0	3074	10022	0	3173	12197	0	3549	14486	0	3686	15826	0	3762	18259	0	3960
	20	5040	0	2888	8064	0	2964	9187	0	3124	9936	0	3230	12096	0	3610	14400	0	3800	15480	0	3933	18144	0	4142
	22	4968	0	2926	7992	0	3002	9072	0	3189	9792	0	3314	11966	0	3697	14314	0	3952	15653	0	4077	18058	0	4313
	24	4896	0	2964	7920	0	3040	8991	0	3252	9706	0	3393	11866	0	3785	14227	0	4104	15566	0	4233	17798	0	4488
(1.2+2.5+3.5)+(1.2+2.5+3.5)	16	5184	0	2812	8208	0	2888	9357	0	3011	10123	0	3093	12326	0	3462	14558	0	3507	15883	0	3602	18331	0	3781
	18	5112	0	2850	8136	0	2926	9268	0	3074	10022	0	3173	12197	0	3549	14486	0	3686	15826	0	3762	18259	0	3960
	20	5040	0	2888	8064	0	2964	9187	0	3124	9936	0	3230	12096	0	3610	14400	0	3800	15480	0	3933	18144	0	4142
	22	4968	0	2926	7992	0	3002	9072	0	3189	9792	0	3314	11966	0	3697	14314	0	3952	15653	0	4077	18058	0	4313
	24	4896	0	2964	7920	0	3040	8991	0	3252	9706	0	3393	11866	0	3785	14227	0	4104	15566	0	4233	17798	0	4488
(1.2+2.5+3.5)+(1.2+3.5+3.5)	16	5184	0	2812	8208	0	2888	9357	0	3011	10123	0	3093	12326	0	3462	14558	0	3507	15883	0	3602	18331	0	3781
	18	5112	0	2850	8136	0	2926	9268	0	3074	10022	0	3173	12197	0	3549	14486	0	3686	15826	0	3762	18259	0	3960
	20	5040	0	2888	8064	0	2964	9187	0	3124	9936	0	3230	12096	0	3610	14400	0	3800	15480	0	3933	18144	0	4142
	22	4968	0	2926	7992	0	3002	9072	0	3189	9792	0	3314	11966	0	3697	14314	0	3952	15653	0	4077	18058	0	4313
	24	4896	0	2964	7920	0	3040	8991	0	3252	9706	0	3393	11866	0	3785	14227	0	4104	15566	0	4233	17798	0	4488
(1.2+2.5+3.5)+(1.8+1.8+1.8)	16	5112	0	2775	8093	0	2850	9227	0	2972	9982	0	3053	12154	0	3416	14355	0	3461	15661	0	3555	18075	0	3731
	18	5041	0	2813	8022	0	2888	9138	0	3034	9883	0	3131	12027	0	3503	14284	0	3638	15605	0	3713	18004	0	3908
	20	4970	0	2850	7951	0	2925	9059	0	3083	9797	0	3188	11927	0	3563	14199	0	3750	15264	0	3881	17891	0	4088
	22	4899	0	2888	7880	0	2963	8945	0	3147	9655	0	3270	11799	0	3649	14114	0	3900	15434	0	4024	17806	0	4256
	24	4828	0	2925	7809	0	3000	8866	0	3209	9570	0	3349	11700	0	3735	14029	0	4050	15349	0	4178	17550	0	4429
(1.2+2.5+3.5)+(1.8+1.8+2.5)	16	5184	0	2812	8208	0	2888	9357	0	3011	10123	0	3093	12326	0	3462	14558	0	3507	15883	0	3602	18331	0	3781
	18	5112	0	2850	8136	0	2926	9268	0	3074	10022	0	3173	12197	0	3549	14486	0	3686	15826	0	3762	18259	0	3960
	20	5040	0	2888	8064	0	2964	9187	0	3124	9936	0	3230	12096	0	3610	14400	0	3800	15480	0	3933	18144	0	4142
	22	4968	0	2926	7992	0	3002	9072	0	3189	9792	0	3314	11966	0	3697	14314	0	3952	15653	0	4077	18058	0	4313
	24	4896	0	2964	7920	0	3040	8991	0	3252	9706	0	3393	11866	0	3785	14227	0	4104	15566	0	4233	17798	0	4488
(1.2+2.5+3.5)+(1.8+1.8+3.5)	16	5184	0	2812	8208	0	2888	9357	0	3011	10123	0	3093	12326	0	3462	14558	0	3507	15883	0	3602	18331	0	3781
	18	5112	0	2850	8136	0	2926	9268	0	3074	10022	0	3173	12197	0	3549	14486	0	3686	15826	0	3762	18259	0	3960
	20	5040	0	2888	8064	0	2964	9187	0	3124	9936	0	3230	12096	0	3610	14400	0	3800	15480	0	3933	18144	0	4142
	22	4968	0	2926	7992	0	3002	9072	0	3189	9792	0	3314	11966	0	3697	14314	0	3952	15653	0	4077	18058	0	4313
	24	4896	0	2964	7920	0	3040	8991	0	3252	9706	0	3393	11866	0	3785	14227	0	4104	15566	0	4233	17798	0	4488

EWB : Evaporator Wet Bulb temperature (°C)

EDB : Evaporator Dry Bulb temperature (°C)

(°CDB) : Outdoor Unit Inlet Air Dry Temperature (°C)

TC : Total Capacity (W)

SHC : Sensible Heating Capacity (W)

PI : Power Input

	INDOOR	OUTDOOR TEMPERATURE (°CDW)																							
	EDB	-15			-10			-7			-5			0			7			10			15		
	°C	TC	SHC	PI	TC	SHC	PI	TC	SHC	PI	TC	SHC	PI	TC	SHC	PI	TC	SHC	PI	TC	SHC	PI	TC	SHC	PI
(1.2+2.5+3.5) +(1.8+1.8+5)	16	5184	0	2812	8208	0	2888	9357	0	3011	10123	0	3093	12326	0	3462	14558	0	3507	15883	0	3602	18331	0	3781
	18	5112	0	2850	8136	0	2926	9268	0	3074	10022	0	3173	12197	0	3549	14486	0	3686	15826	0	3762	18259	0	3960
	20	5040	0	2888	8064	0	2964	9187	0	3124	9936	0	3230	12096	0	3610	14400	0	3800	15480	0	3933	18144	0	4142
	22	4968	0	2926	7992	0	3002	9072	0	3189	9792	0	3314	11966	0	3697	14314	0	3952	15653	0	4077	18058	0	4313
	24	4896	0	2964	7920	0	3040	8991	0	3252	9706	0	3393	11866	0	3785	14227	0	4104	15566	0	4233	17798	0	4488
(1.2+2.5+3.5) +(1.8+2.5+2.5)	16	5184	0	2812	8208	0	2888	9357	0	3011	10123	0	3093	12326	0	3462	14558	0	3507	15883	0	3602	18331	0	3781
	18	5112	0	2850	8136	0	2926	9268	0	3074	10022	0	3173	12197	0	3549	14486	0	3686	15826	0	3762	18259	0	3960
	20	5040	0	2888	8064	0	2964	9187	0	3124	9936	0	3230	12096	0	3610	14400	0	3800	15480	0	3933	18144	0	4142
	22	4968	0	2926	7992	0	3002	9072	0	3189	9792	0	3314	11966	0	3697	14314	0	3952	15653	0	4077	18058	0	4313
	24	4896	0	2964	7920	0	3040	8991	0	3252	9706	0	3393	11866	0	3785	14227	0	4104	15566	0	4233	17798	0	4488
(1.2+2.5+3.5) +(1.8+2.5+3.5)	16	5184	0	2812	8208	0	2888	9357	0	3011	10123	0	3093	12326	0	3462	14558	0	3507	15883	0	3602	18331	0	3781
	18	5112	0	2850	8136	0	2926	9268	0	3074	10022	0	3173	12197	0	3549	14486	0	3686	15826	0	3762	18259	0	3960
	20	5040	0	2888	8064	0	2964	9187	0	3124	9936	0	3230	12096	0	3610	14400	0	3800	15480	0	3933	18144	0	4142
	22	4968	0	2926	7992	0	3002	9072	0	3189	9792	0	3314	11966	0	3697	14314	0	3952	15653	0	4077	18058	0	4313
	24	4896	0	2964	7920	0	3040	8991	0	3252	9706	0	3393	11866	0	3785	14227	0	4104	15566	0	4233	17798	0	4488
(1.2+2.5+3.5) +(1.8+3.5+3.5)	16	5184	0	2812	8208	0	2888	9357	0	3011	10123	0	3093	12326	0	3462	14558	0	3507	15883	0	3602	18331	0	3781
	18	5112	0	2850	8136	0	2926	9268	0	3074	10022	0	3173	12197	0	3549	14486	0	3686	15826	0	3762	18259	0	3960
	20	5040	0	2888	8064	0	2964	9187	0	3124	9936	0	3230	12096	0	3610	14400	0	3800	15480	0	3933	18144	0	4142
	22	4968	0	2926	7992	0	3002	9072	0	3189	9792	0	3314	11966	0	3697	14314	0	3952	15653	0	4077	18058	0	4313
	24	4896	0	2964	7920	0	3040	8991	0	3252	9706	0	3393	11866	0	3785	14227	0	4104	15566	0	4233	17798	0	4488
(1.2+2.5+3.5) +(2.5+2.5+2.5)	16	5184	0	2812	8208	0	2888	9357	0	3011	10123	0	3093	12326	0	3462	14558	0	3507	15883	0	3602	18331	0	3781
	18	5112	0	2850	8136	0	2926	9268	0	3074	10022	0	3173	12197	0	3549	14486	0	3686	15826	0	3762	18259	0	3960
	20	5040	0	2888	8064	0	2964	9187	0	3124	9936	0	3230	12096	0	3610	14400	0	3800	15480	0	3933	18144	0	4142
	22	4968	0	2926	7992	0	3002	9072	0	3189	9792	0	3314	11966	0	3697	14314	0	3952	15653	0	4077	18058	0	4313
	24	4896	0	2964	7920	0	3040	8991	0	3252	9706	0	3393	11866	0	3785	14227	0	4104	15566	0	4233	17798	0	4488
(1.2+2.5+3.5) +(2.5+2.5+3.5)	16	5184	0	2812	8208	0	2888	9357	0	3011	10123	0	3093	12326	0	3462	14558	0	3507	15883	0	3602	18331	0	3781
	18	5112	0	2850	8136	0	2926	9268	0	3074	10022	0	3173	12197	0	3549	14486	0	3686	15826	0	3762	18259	0	3960
	20	5040	0	2888	8064	0	2964	9187	0	3124	9936	0	3230	12096	0	3610	14400	0	3800	15480	0	3933	18144	0	4142
	22	4968	0	2926	7992	0	3002	9072	0	3189	9792	0	3314	11966	0	3697	14314	0	3952	15653	0	4077	18058	0	4313
	24	4896	0	2964	7920	0	3040	8991	0	3252	9706	0	3393	11866	0	3785	14227	0	4104	15566	0	4233	17798	0	4488
(1.2+3.5+3.5) +(1.2+1.2+1.2)	16	4536	0	2501	7182	0	2569	8187	0	2678	8858	0	2751	10786	0	3079	12739	0	3120	13898	0	3204	16040	0	3363
	18	4473	0	2535	7119	0	2603	8109	0	2734	8770	0	2822	10672	0	3157	12676	0	3279	13847	0	3346	15977	0	3522
	20	4410	0	2569	7056	0	2636	8039	0	2778	8694	0	2873	10584	0	3211	12600	0	3380	13545	0	3498	15876	0	3684
	22	4347	0	2603	6993	0	2670	7938	0	2836	8568	0	2947	10471	0	3289	12524	0	3515	13696	0	3627	15800	0	3836
	24	4284	0	2636	6930	0	2704	7867	0	2893	8492	0	3018	10382	0	3366	12449	0	3650	13621	0	3765	15574	0	3992
(1.2+3.5+3.5) +(1.2+1.2+1.8)	16	4788	0	2575	7581	0	2645	8642	0	2758	9350	0	2833	11385	0	3170	13446	0	3212	14670	0	3299	16931	0	3463
	18	4722	0	2610	7515	0	2680	8560	0	2815	9257	0	2906	11265	0	3250	13380	0	3376	14617	0	3445	16864	0	3626
	20	4655	0	2645	7448	0	2714	8485	0	2861	9177	0	2958	11172	0	3306	13300	0	3480	14298	0	3602	16758	0	3793
	22	4589	0	2680	7382	0	2749	8379	0	2920	9044	0	3035	11052	0	3386	13220	0	3619	14457	0	3734	16678	0	3950
	24	4522	0	2714	7315	0	2784	8305	0	2978	8964	0	3108	10959	0	3466	13140	0	3758	14377	0	3877	16439	0	4110

EWB : Evaporator Wet Bulb temperature (°C)

EDB : Evaporator Dry Bulb temperature (°C)

(°CDB) : Outdoor Unit Inlet Air Dry Temperature (°C)

TC : Total Capacity (W)

SHC : Sensible Heating Capacity (W)

PI : Power Input

	INDOOR	OUTDOOR TEMPERATURE (°CDW)																							
	EDB	-15			-10			-7			-5			0			7			10			15		
	°C	TC	SHC	PI	TC	SHC	PI	TC	SHC	PI	TC	SHC	PI	TC	SHC	PI	TC	SHC	PI	TC	SHC	PI	TC	SHC	PI
(1.2+3.5+3.5) +(1.2+1.2+2.5)	16	5184	0	2812	8208	0	2888	9357	0	3011	10123	0	3093	12326	0	3462	14558	0	3507	15883	0	3602	18331	0	3781
	18	5112	0	2850	8136	0	2926	9268	0	3074	10022	0	3173	12197	0	3549	14486	0	3686	15826	0	3762	18259	0	3960
	20	5040	0	2888	8064	0	2964	9187	0	3124	9936	0	3230	12096	0	3610	14400	0	3800	15480	0	3933	18144	0	4142
	22	4968	0	2926	7992	0	3002	9072	0	3189	9792	0	3314	11966	0	3697	14314	0	3952	15653	0	4077	18058	0	4313
	24	4896	0	2964	7920	0	3040	8991	0	3252	9706	0	3393	11866	0	3785	14227	0	4104	15566	0	4233	17798	0	4488
(1.2+3.5+3.5) +(1.2+1.2+3.5)	16	5184	0	2812	8208	0	2888	9357	0	3011	10123	0	3093	12326	0	3462	14558	0	3507	15883	0	3602	18331	0	3781
	18	5112	0	2850	8136	0	2926	9268	0	3074	10022	0	3173	12197	0	3549	14486	0	3686	15826	0	3762	18259	0	3960
	20	5040	0	2888	8064	0	2964	9187	0	3124	9936	0	3230	12096	0	3610	14400	0	3800	15480	0	3933	18144	0	4142
	22	4968	0	2926	7992	0	3002	9072	0	3189	9792	0	3314	11966	0	3697	14314	0	3952	15653	0	4077	18058	0	4313
	24	4896	0	2964	7920	0	3040	8991	0	3252	9706	0	3393	11866	0	3785	14227	0	4104	15566	0	4233	17798	0	4488
(1.2+3.5+3.5) +(1.2+1.2+5)	16	5184	0	2812	8208	0	2888	9357	0	3011	10123	0	3093	12326	0	3462	14558	0	3507	15883	0	3602	18331	0	3781
	18	5112	0	2850	8136	0	2926	9268	0	3074	10022	0	3173	12197	0	3549	14486	0	3686	15826	0	3762	18259	0	3960
	20	5040	0	2888	8064	0	2964	9187	0	3124	9936	0	3230	12096	0	3610	14400	0	3800	15480	0	3933	18144	0	4142
	22	4968	0	2926	7992	0	3002	9072	0	3189	9792	0	3314	11966	0	3697	14314	0	3952	15653	0	4077	18058	0	4313
	24	4896	0	2964	7920	0	3040	8991	0	3252	9706	0	3393	11866	0	3785	14227	0	4104	15566	0	4233	17798	0	4488
(1.2+3.5+3.5) +(1.2+1.8+1.8)	16	5040	0	2701	7980	0	2774	9097	0	2892	9842	0	2971	11984	0	3325	14154	0	3369	15442	0	3460	17822	0	3632
	18	4970	0	2738	7910	0	2811	9010	0	2953	9744	0	3048	11858	0	3409	14084	0	3541	15386	0	3614	17752	0	3803
	20	4900	0	2774	7840	0	2847	8932	0	3000	9660	0	3103	11760	0	3468	14000	0	3650	15050	0	3778	17640	0	3979
	22	4830	0	2811	7770	0	2884	8820	0	3063	9520	0	3183	11634	0	3551	13916	0	3796	15218	0	3916	17556	0	4143
	24	4760	0	2847	7700	0	2920	8742	0	3124	9436	0	3259	11536	0	3635	13832	0	3942	15134	0	4066	17304	0	4311
(1.2+3.5+3.5) +(1.2+1.8+2.5)	16	5184	0	2812	8208	0	2888	9357	0	3011	10123	0	3093	12326	0	3462	14558	0	3507	15883	0	3602	18331	0	3781
	18	5112	0	2850	8136	0	2926	9268	0	3074	10022	0	3173	12197	0	3549	14486	0	3686	15826	0	3762	18259	0	3960
	20	5040	0	2888	8064	0	2964	9187	0	3124	9936	0	3230	12096	0	3610	14400	0	3800	15480	0	3933	18144	0	4142
	22	4968	0	2926	7992	0	3002	9072	0	3189	9792	0	3314	11966	0	3697	14314	0	3952	15653	0	4077	18058	0	4313
	24	4896	0	2964	7920	0	3040	8991	0	3252	9706	0	3393	11866	0	3785	14227	0	4104	15566	0	4233	17798	0	4488
(1.2+3.5+3.5) +(1.2+1.8+3.5)	16	5184	0	2812	8208	0	2888	9357	0	3011	10123	0	3093	12326	0	3462	14558	0	3507	15883	0	3602	18331	0	3781
	18	5112	0	2850	8136	0	2926	9268	0	3074	10022	0	3173	12197	0	3549	14486	0	3686	15826	0	3762	18259	0	3960
	20	5040	0	2888	8064	0	2964	9187	0	3124	9936	0	3230	12096	0	3610	14400	0	3800	15480	0	3933	18144	0	4142
	22	4968	0	2926	7992	0	3002	9072	0	3189	9792	0	3314	11966	0	3697	14314	0	3952	15653	0	4077	18058	0	4313
	24	4896	0	2964	7920	0	3040	8991	0	3252	9706	0	3393	11866	0	3785	14227	0	4104	15566	0	4233	17798	0	4488
(1.2+3.5+3.5) +(1.2+1.8+5)	16	5184	0	2812	8208	0	2888	9357	0	3011	10123	0	3093	12326	0	3462	14558	0	3507	15883	0	3602	18331	0	3781
	18	5112	0	2850	8136	0	2926	9268	0	3074	10022	0	3173	12197	0	3549	14486	0	3686	15826	0	3762	18259	0	3960
	20	5040	0	2888	8064	0	2964	9187	0	3124	9936	0	3230	12096	0	3610	14400	0	3800	15480	0	3933	18144	0	4142
	22	4968	0	2926	7992	0	3002	9072	0	3189	9792	0	3314	11966	0	3697	14314	0	3952	15653	0	4077	18058	0	4313
	24	4896	0	2964	7920	0	3040	8991	0	3252	9706	0	3393	11866	0	3785	14227	0	4104	15566	0	4233	17798	0	4488
(1.2+3.5+3.5) +(1.2+2.5+2.5)	16	5184	0	2812	8208	0	2888	9357	0	3011	10123	0	3093	12326	0	3462	14558	0	3507	15883	0	3602	18331	0	3781
	18	5112	0	2850	8136	0	2926	9268	0	3074	10022	0	3173	12197	0	3549	14486	0	3686	15826	0	3762	18259	0	3960
	20	5040	0	2888	8064	0	2964	9187	0	3124	9936	0	3230	12096	0	3610	14400	0	3800	15480	0	3933	18144	0	4142
	22	4968	0	2926	7992	0	3002	9072	0	3189	9792	0	3314	11966	0	3697	14314	0	3952	15653	0	4077	18058	0	4313
	24	4896	0	2964	7920	0	3040	8991	0	3252	9706	0	3393	11866	0	3785	14227	0	4104	15566	0	4233	17798	0	4488

EWB : Evaporator Wet Bulb temperature (°C)

EDB : Evaporator Dry Bulb temperature (°C)

(°CDB) : Outdoor Unit Inlet Air Dry Temperature (°C)

TC : Total Capacity (W)

SHC : Sensible Heating Capacity (W)

PI : Power Input

	INDOOR	OUTDOOR TEMPERATURE (°CDW)																							
	EDB	-15			-10			-7			-5			0			7			10			15		
	°C	TC	SHC	PI	TC	SHC	PI	TC	SHC	PI	TC	SHC	PI	TC	SHC	PI	TC	SHC	PI	TC	SHC	PI	TC	SHC	PI
(1.2+3.5+3.5) +(1.2+2.5+3.5)	16	5184	0	2812	8208	0	2888	9357	0	3011	10123	0	3093	12326	0	3462	14558	0	3507	15883	0	3602	18331	0	3781
	18	5112	0	2850	8136	0	2926	9268	0	3074	10022	0	3173	12197	0	3549	14486	0	3686	15826	0	3762	18259	0	3960
	20	5040	0	2888	8064	0	2964	9187	0	3124	9936	0	3230	12096	0	3610	14400	0	3800	15480	0	3933	18144	0	4142
	22	4968	0	2926	7992	0	3002	9072	0	3189	9792	0	3314	11966	0	3697	14314	0	3952	15653	0	4077	18058	0	4313
	24	4896	0	2964	7920	0	3040	8991	0	3252	9706	0	3393	11866	0	3785	14227	0	4104	15566	0	4233	17798	0	4488
(1.2+3.5+3.5) +(1.2+3.5+3.5)	16	5184	0	2812	8208	0	2888	9357	0	3011	10123	0	3093	12326	0	3462	14558	0	3507	15883	0	3602	18331	0	3781
	18	5112	0	2850	8136	0	2926	9268	0	3074	10022	0	3173	12197	0	3549	14486	0	3686	15826	0	3762	18259	0	3960
	20	5040	0	2888	8064	0	2964	9187	0	3124	9936	0	3230	12096	0	3610	14400	0	3800	15480	0	3933	18144	0	4142
	22	4968	0	2926	7992	0	3002	9072	0	3189	9792	0	3314	11966	0	3697	14314	0	3952	15653	0	4077	18058	0	4313
	24	4896	0	2964	7920	0	3040	8991	0	3252	9706	0	3393	11866	0	3785	14227	0	4104	15566	0	4233	17798	0	4488
(1.2+3.5+3.5) +(1.8+1.8+1.8)	16	5112	0	2775	8093	0	2850	9227	0	2972	9982	0	3053	12154	0	3416	14355	0	3461	15661	0	3555	18075	0	3731
	18	5041	0	2813	8022	0	2888	9138	0	3034	9883	0	3131	12027	0	3503	14284	0	3638	15605	0	3713	18004	0	3908
	20	4970	0	2850	7951	0	2925	9059	0	3083	9797	0	3188	11927	0	3563	14199	0	3750	15264	0	3881	17891	0	4088
	22	4899	0	2888	7880	0	2963	8945	0	3147	9655	0	3270	11799	0	3649	14114	0	3900	15434	0	4024	17806	0	4256
	24	4828	0	2925	7809	0	3000	8866	0	3209	9570	0	3349	11700	0	3735	14029	0	4050	15349	0	4178	17550	0	4429
(1.2+3.5+3.5) +(1.8+1.8+2.5)	16	5184	0	2812	8208	0	2888	9357	0	3011	10123	0	3093	12326	0	3462	14558	0	3507	15883	0	3602	18331	0	3781
	18	5112	0	2850	8136	0	2926	9268	0	3074	10022	0	3173	12197	0	3549	14486	0	3686	15826	0	3762	18259	0	3960
	20	5040	0	2888	8064	0	2964	9187	0	3124	9936	0	3230	12096	0	3610	14400	0	3800	15480	0	3933	18144	0	4142
	22	4968	0	2926	7992	0	3002	9072	0	3189	9792	0	3314	11966	0	3697	14314	0	3952	15653	0	4077	18058	0	4313
	24	4896	0	2964	7920	0	3040	8991	0	3252	9706	0	3393	11866	0	3785	14227	0	4104	15566	0	4233	17798	0	4488
(1.2+3.5+3.5) +(1.8+1.8+3.5)	16	5184	0	2812	8208	0	2888	9357	0	3011	10123	0	3093	12326	0	3462	14558	0	3507	15883	0	3602	18331	0	3781
	18	5112	0	2850	8136	0	2926	9268	0	3074	10022	0	3173	12197	0	3549	14486	0	3686	15826	0	3762	18259	0	3960
	20	5040	0	2888	8064	0	2964	9187	0	3124	9936	0	3230	12096	0	3610	14400	0	3800	15480	0	3933	18144	0	4142
	22	4968	0	2926	7992	0	3002	9072	0	3189	9792	0	3314	11966	0	3697	14314	0	3952	15653	0	4077	18058	0	4313
	24	4896	0	2964	7920	0	3040	8991	0	3252	9706	0	3393	11866	0	3785	14227	0	4104	15566	0	4233	17798	0	4488
(1.2+3.5+3.5) +(1.8+1.8+5)	16	5184	0	2812	8208	0	2888	9357	0	3011	10123	0	3093	12326	0	3462	14558	0	3507	15883	0	3602	18331	0	3781
	18	5112	0	2850	8136	0	2926	9268	0	3074	10022	0	3173	12197	0	3549	14486	0	3686	15826	0	3762	18259	0	3960
	20	5040	0	2888	8064	0	2964	9187	0	3124	9936	0	3230	12096	0	3610	14400	0	3800	15480	0	3933	18144	0	4142
	22	4968	0	2926	7992	0	3002	9072	0	3189	9792	0	3314	11966	0	3697	14314	0	3952	15653	0	4077	18058	0	4313
	24	4896	0	2964	7920	0	3040	8991	0	3252	9706	0	3393	11866	0	3785	14227	0	4104	15566	0	4233	17798	0	4488
(1.2+3.5+3.5) +(1.8+2.5+2.5)	16	5184	0	2812	8208	0	2888	9357	0	3011	10123	0	3093	12326	0	3462	14558	0	3507	15883	0	3602	18331	0	3781
	18	5112	0	2850	8136	0	2926	9268	0	3074	10022	0	3173	12197	0	3549	14486	0	3686	15826	0	3762	18259	0	3960
	20	5040	0	2888	8064	0	2964	9187	0	3124	9936	0	3230	12096	0	3610	14400	0	3800	15480	0	3933	18144	0	4142
	22	4968	0	2926	7992	0	3002	9072	0	3189	9792	0	3314	11966	0	3697	14314	0	3952	15653	0	4077	18058	0	4313
	24	4896	0	2964	7920	0	3040	8991	0	3252	9706	0	3393	11866	0	3785	14227	0	4104	15566	0	4233	17798	0	4488
(1.2+3.5+3.5) +(1.8+2.5+3.5)	16	5184	0	2812	8208	0	2888	9357	0	3011	10123	0	3093	12326	0	3462	14558	0	3507	15883	0	3602	18331	0	3781
	18	5112	0	2850	8136	0	2926	9268	0	3074	10022	0	3173	12197	0	3549	14486	0	3686	15826	0	3762	18259	0	3960
	20	5040	0	2888	8064	0	2964	9187	0	3124	9936	0	3230	12096	0	3610	14400	0	3800	15480	0	3933	18144	0	4142
	22	4968	0	2926	7992	0	3002	9072	0	3189	9792	0	3314	11966	0	3697	14314	0	3952	15653	0	4077	18058	0	4313
	24	4896	0	2964	7920	0	3040	8991	0	3252	9706	0	3393	11866	0	3785	14227	0	4104	15566	0	4233	17798	0	4488

EWB : Evaporator Wet Bulb temperature (°C)

EDB : Evaporator Dry Bulb temperature (°C)

(°CDB) : Outdoor Unit Inlet Air Dry Temperature (°C)

TC : Total Capacity (W)

SHC : Sensible Heating Capacity (W)

PI : Power Input

	INDOOR	OUTDOOR TEMPERATURE (°CDW)																							
	EDB	-15			-10			-7			-5			0			7			10			15		
	°C	TC	SHC	PI	TC	SHC	PI	TC	SHC	PI	TC	SHC	PI	TC	SHC	PI	TC	SHC	PI	TC	SHC	PI	TC	SHC	PI
(1.2+3.5+3.5) +(1.8+3.5+3.5)	16	5184	0	2812	8208	0	2888	9357	0	3011	10123	0	3093	12326	0	3462	14558	0	3507	15883	0	3602	18331	0	3781
	18	5112	0	2850	8136	0	2926	9268	0	3074	10022	0	3173	12197	0	3549	14486	0	3686	15826	0	3762	18259	0	3960
	20	5040	0	2888	8064	0	2964	9187	0	3124	9936	0	3230	12096	0	3610	14400	0	3800	15480	0	3933	18144	0	4142
	22	4968	0	2926	7992	0	3002	9072	0	3189	9792	0	3314	11966	0	3697	14314	0	3952	15653	0	4077	18058	0	4313
	24	4896	0	2964	7920	0	3040	8991	0	3252	9706	0	3393	11866	0	3785	14227	0	4104	15566	0	4233	17798	0	4488
(1.2+3.5+3.5) +(2.5+2.5+2.5)	16	5184	0	2812	8208	0	2888	9357	0	3011	10123	0	3093	12326	0	3462	14558	0	3507	15883	0	3602	18331	0	3781
	18	5112	0	2850	8136	0	2926	9268	0	3074	10022	0	3173	12197	0	3549	14486	0	3686	15826	0	3762	18259	0	3960
	20	5040	0	2888	8064	0	2964	9187	0	3124	9936	0	3230	12096	0	3610	14400	0	3800	15480	0	3933	18144	0	4142
	22	4968	0	2926	7992	0	3002	9072	0	3189	9792	0	3314	11966	0	3697	14314	0	3952	15653	0	4077	18058	0	4313
	24	4896	0	2964	7920	0	3040	8991	0	3252	9706	0	3393	11866	0	3785	14227	0	4104	15566	0	4233	17798	0	4488
(1.2+3.5+3.5) +(2.5+2.5+3.5)	16	5184	0	2812	8208	0	2888	9357	0	3011	10123	0	3093	12326	0	3462	14558	0	3507	15883	0	3602	18331	0	3781
	18	5112	0	2850	8136	0	2926	9268	0	3074	10022	0	3173	12197	0	3549	14486	0	3686	15826	0	3762	18259	0	3960
	20	5040	0	2888	8064	0	2964	9187	0	3124	9936	0	3230	12096	0	3610	14400	0	3800	15480	0	3933	18144	0	4142
	22	4968	0	2926	7992	0	3002	9072	0	3189	9792	0	3314	11966	0	3697	14314	0	3952	15653	0	4077	18058	0	4313
	24	4896	0	2964	7920	0	3040	8991	0	3252	9706	0	3393	11866	0	3785	14227	0	4104	15566	0	4233	17798	0	4488
(1.8+1.8+1.8) +(1.8+1.8+1.8)	16	5039	0	2738	7979	0	2812	9096	0	2932	9841	0	3012	11982	0	3371	14152	0	3415	15440	0	3508	17819	0	3682
	18	4969	0	2775	7909	0	2849	9009	0	2993	9743	0	3090	11856	0	3456	14082	0	3589	15384	0	3663	17749	0	3855
	20	4899	0	2812	7839	0	2886	8931	0	3041	9659	0	3145	11758	0	3515	13998	0	3700	15048	0	3830	17637	0	4033
	22	4829	0	2849	7769	0	2923	8819	0	3105	9519	0	3226	11632	0	3600	13914	0	3848	15216	0	3970	17553	0	4200
	24	4759	0	2886	7699	0	2960	8740	0	3166	9435	0	3304	11534	0	3685	13830	0	3996	15132	0	4122	17302	0	4370
(1.8+1.8+1.8) +(1.8+1.8+2.5)	16	5112	0	2775	8093	0	2850	9227	0	2972	9982	0	3053	12154	0	3416	14355	0	3461	15661	0	3555	18075	0	3731
	18	5041	0	2813	8022	0	2888	9138	0	3034	9883	0	3131	12027	0	3503	14284	0	3638	15605	0	3713	18004	0	3908
	20	4970	0	2850	7951	0	2925	9059	0	3083	9797	0	3188	11927	0	3563	14199	0	3750	15264	0	3881	17891	0	4088
	22	4899	0	2888	7880	0	2963	8945	0	3147	9655	0	3270	11799	0	3649	14114	0	3900	15434	0	4024	17806	0	4256
	24	4828	0	2925	7809	0	3000	8866	0	3209	9570	0	3349	11700	0	3735	14029	0	4050	15349	0	4178	17550	0	4429
(1.8+1.8+1.8) +(1.8+1.8+3.5)	16	5112	0	2775	8093	0	2850	9227	0	2972	9982	0	3053	12154	0	3416	14355	0	3461	15661	0	3555	18075	0	3731
	18	5041	0	2813	8022	0	2888	9138	0	3034	9883	0	3131	12027	0	3503	14284	0	3638	15605	0	3713	18004	0	3908
	20	4970	0	2850	7951	0	2925	9059	0	3083	9797	0	3188	11927	0	3563	14199	0	3750	15264	0	3881	17891	0	4088
	22	4899	0	2888	7880	0	2963	8945	0	3147	9655	0	3270	11799	0	3649	14114	0	3900	15434	0	4024	17806	0	4256
	24	4828	0	2925	7809	0	3000	8866	0	3209	9570	0	3349	11700	0	3735	14029	0	4050	15349	0	4178	17550	0	4429
(1.8+1.8+1.8) +(1.8+1.8+5)	16	5112	0	2775	8093	0	2850	9227	0	2972	9982	0	3053	12154	0	3416	14355	0	3461	15661	0	3555	18075	0	3731
	18	5041	0	2813	8022	0	2888	9138	0	3034	9883	0	3131	12027	0	3503	14284	0	3638	15605	0	3713	18004	0	3908
	20	4970	0	2850	7951	0	2925	9059	0	3083	9797	0	3188	11927	0	3563	14199	0	3750	15264	0	3881	17891	0	4088
	22	4899	0	2888	7880	0	2963	8945	0	3147	9655	0	3270	11799	0	3649	14114	0	3900	15434	0	4024	17806	0	4256
	24	4828	0	2925	7809	0	3000	8866	0	3209	9570	0	3349	11700	0	3735	14029	0	4050	15349	0	4178	17550	0	4429
(1.8+1.8+2.5) +(1.8+1.8+2.5)	16	5184	0	2812	8208	0	2888	9357	0	3011	10123	0	3093	12326	0	3462	14558	0	3507	15883	0	3602	18331	0	3781
	18	5112	0	2850	8136	0	2926	9268	0	3074	10022	0	3173	12197	0	3549	14486	0	3686	15826	0	3762	18259	0	3960
	20	5040	0	2888	8064	0	2964	9187	0	3124	9936	0	3230	12096	0	3610	14400	0	3800	15480	0	3933	18144	0	4142
	22	4968	0	2926	7992	0	3002	9072	0	3189	9792	0	3314	11966	0	3697	14314	0	3952	15653	0	4077	18058	0	4313
	24	4896	0	2964	7920	0	3040	8991	0	3252	9706	0	3393	11866	0	3785	14227	0	4104	15566	0	4233	17798	0	4488

EWB : Evaporator Wet Bulb temperature (°C)

EDB : Evaporator Dry Bulb temperature (°C)

(°CDB) : Outdoor Unit Inlet Air Dry Temperature (°C)

TC : Total Capacity (W)

SHC : Sensible Heating Capacity (W)

PI : Power Input

	INDOOR	OUTDOOR TEMPERATURE (°CDW)																							
	EDB	-15			-10			-7			-5			0			7			10			15		
	°C	TC	SHC	PI	TC	SHC	PI	TC	SHC	PI	TC	SHC	PI	TC	SHC	PI	TC	SHC	PI	TC	SHC	PI	TC	SHC	PI
(1.8+1.8+2.5) +(1.8+1.8+3.5)	16	5184	0	2812	8208	0	2888	9357	0	3011	10123	0	3093	12326	0	3462	14558	0	3507	15883	0	3602	18331	0	3781
	18	5112	0	2850	8136	0	2926	9268	0	3074	10022	0	3173	12197	0	3549	14486	0	3686	15826	0	3762	18259	0	3960
	20	5040	0	2888	8064	0	2964	9187	0	3124	9936	0	3230	12096	0	3610	14400	0	3800	15480	0	3933	18144	0	4142
	22	4968	0	2926	7992	0	3002	9072	0	3189	9792	0	3314	11966	0	3697	14314	0	3952	15653	0	4077	18058	0	4313
	24	4896	0	2964	7920	0	3040	8991	0	3252	9706	0	3393	11866	0	3785	14227	0	4104	15566	0	4233	17798	0	4488
(1.8+1.8+2.5) +(1.8+1.8+5)	16	5184	0	2812	8208	0	2888	9357	0	3011	10123	0	3093	12326	0	3462	14558	0	3507	15883	0	3602	18331	0	3781
	18	5112	0	2850	8136	0	2926	9268	0	3074	10022	0	3173	12197	0	3549	14486	0	3686	15826	0	3762	18259	0	3960
	20	5040	0	2888	8064	0	2964	9187	0	3124	9936	0	3230	12096	0	3610	14400	0	3800	15480	0	3933	18144	0	4142
	22	4968	0	2926	7992	0	3002	9072	0	3189	9792	0	3314	11966	0	3697	14314	0	3952	15653	0	4077	18058	0	4313
	24	4896	0	2964	7920	0	3040	8991	0	3252	9706	0	3393	11866	0	3785	14227	0	4104	15566	0	4233	17798	0	4488
(1.8+1.8+3.5) +(1.8+1.8+3.5)	16	5184	0	2812	8208	0	2888	9357	0	3011	10123	0	3093	12326	0	3462	14558	0	3507	15883	0	3602	18331	0	3781
	18	5112	0	2850	8136	0	2926	9268	0	3074	10022	0	3173	12197	0	3549	14486	0	3686	15826	0	3762	18259	0	3960
	20	5040	0	2888	8064	0	2964	9187	0	3124	9936	0	3230	12096	0	3610	14400	0	3800	15480	0	3933	18144	0	4142
	22	4968	0	2926	7992	0	3002	9072	0	3189	9792	0	3314	11966	0	3697	14314	0	3952	15653	0	4077	18058	0	4313
	24	4896	0	2964	7920	0	3040	8991	0	3252	9706	0	3393	11866	0	3785	14227	0	4104	15566	0	4233	17798	0	4488
(1.8+1.8+3.5) +(1.8+1.8+5)	16	5184	0	2812	8208	0	2888	9357	0	3011	10123	0	3093	12326	0	3462	14558	0	3507	15883	0	3602	18331	0	3781
	18	5112	0	2850	8136	0	2926	9268	0	3074	10022	0	3173	12197	0	3549	14486	0	3686	15826	0	3762	18259	0	3960
	20	5040	0	2888	8064	0	2964	9187	0	3124	9936	0	3230	12096	0	3610	14400	0	3800	15480	0	3933	18144	0	4142
	22	4968	0	2926	7992	0	3002	9072	0	3189	9792	0	3314	11966	0	3697	14314	0	3952	15653	0	4077	18058	0	4313
	24	4896	0	2964	7920	0	3040	8991	0	3252	9706	0	3393	11866	0	3785	14227	0	4104	15566	0	4233	17798	0	4488
(1.8+1.8+5)+(1.8+1.8+5)	16	5184	0	2812	8208	0	2888	9357	0	3011	10123	0	3093	12326	0	3462	14558	0	3507	15883	0	3602	18331	0	3781
	18	5112	0	2850	8136	0	2926	9268	0	3074	10022	0	3173	12197	0	3549	14486	0	3686	15826	0	3762	18259	0	3960
	20	5040	0	2888	8064	0	2964	9187	0	3124	9936	0	3230	12096	0	3610	14400	0	3800	15480	0	3933	18144	0	4142
	22	4968	0	2926	7992	0	3002	9072	0	3189	9792	0	3314	11966	0	3697	14314	0	3952	15653	0	4077	18058	0	4313
	24	4896	0	2964	7920	0	3040	8991	0	3252	9706	0	3393	11866	0	3785	14227	0	4104	15566	0	4233	17798	0	4488
(1.8+1.8+2.5) +(1.8+2.5+2.5)	16	5184	0	2812	8208	0	2888	9357	0	3011	10123	0	3093	12326	0	3462	14558	0	3507	15883	0	3602	18331	0	3781
	18	5112	0	2850	8136	0	2926	9268	0	3074	10022	0	3173	12197	0	3549	14486	0	3686	15826	0	3762	18259	0	3960
	20	5040	0	2888	8064	0	2964	9187	0	3124	9936	0	3230	12096	0	3610	14400	0	3800	15480	0	3933	18144	0	4142
	22	4968	0	2926	7992	0	3002	9072	0	3189	9792	0	3314	11966	0	3697	14314	0	3952	15653	0	4077	18058	0	4313
	24	4896	0	2964	7920	0	3040	8991	0	3252	9706	0	3393	11866	0	3785	14227	0	4104	15566	0	4233	17798	0	4488
(1.8+1.8+2.5) +(1.8+2.5+3.5)	16	5184	0	2812	8208	0	2888	9357	0	3011	10123	0	3093	12326	0	3462	14558	0	3507	15883	0	3602	18331	0	3781
	18	5112	0	2850	8136	0	2926	9268	0	3074	10022	0	3173	12197	0	3549	14486	0	3686	15826	0	3762	18259	0	3960
	20	5040	0	2888	8064	0	2964	9187	0	3124	9936	0	3230	12096	0	3610	14400	0	3800	15480	0	3933	18144	0	4142
	22	4968	0	2926	7992	0	3002	9072	0	3189	9792	0	3314	11966	0	3697	14314	0	3952	15653	0	4077	18058	0	4313
	24	4896	0	2964	7920	0	3040	8991	0	3252	9706	0	3393	11866	0	3785	14227	0	4104	15566	0	4233	17798	0	4488
(1.8+1.8+5)+(1.8+2.5+2.5)	16	5184	0	2812	8208	0	2888	9357	0	3011	10123	0	3093	12326	0	3462	14558	0	3507	15883	0	3602	18331	0	3781
	18	5112	0	2850	8136	0	2926	9268	0	3074	10022	0	3173	12197	0	3549	14486	0	3686	15826	0	3762	18259	0	3960
	20	5040	0	2888	8064	0	2964	9187	0	3124	9936	0	3230	12096	0	3610	14400	0	3800	15480	0	3933	18144	0	4142
	22	4968	0	2926	7992	0	3002	9072	0	3189	9792	0	3314	11966	0	3697	14314	0	3952	15653	0	4077	18058	0	4313
	24	4896	0	2964	7920	0	3040	8991	0	3252	9706	0	3393	11866	0	3785	14227	0	4104	15566	0	4233	17798	0	4488

EWB : Evaporator Wet Bulb temperature (°C)

EDB : Evaporator Dry Bulb temperature (°C)

(°CDB) : Outdoor Unit Inlet Air Dry Temperature (°C)

TC : Total Capacity (W)

SHC : Sensible Heating Capacity (W)

PI : Power Input

	INDOOR	OUTDOOR TEMPERATURE (°CDW)																							
	EDB	-15			-10			-7			-5			0			7			10			15		
	°C	TC	SHC	PI	TC	SHC	PI	TC	SHC	PI	TC	SHC	PI	TC	SHC	PI	TC	SHC	PI	TC	SHC	PI	TC	SHC	PI
(1.8+1.8+3.5)+(1.8+2.5+3.5)	16	5184	0	2812	8208	0	2888	9357	0	3011	10123	0	3093	12326	0	3462	14558	0	3507	15883	0	3602	18331	0	3781
	18	5112	0	2850	8136	0	2926	9268	0	3074	10022	0	3173	12197	0	3549	14486	0	3686	15826	0	3762	18259	0	3960
	20	5040	0	2888	8064	0	2964	9187	0	3124	9936	0	3230	12096	0	3610	14400	0	3800	15480	0	3933	18144	0	4142
	22	4968	0	2926	7992	0	3002	9072	0	3189	9792	0	3314	11966	0	3697	14314	0	3952	15653	0	4077	18058	0	4313
	24	4896	0	2964	7920	0	3040	8991	0	3252	9706	0	3393	11866	0	3785	14227	0	4104	15566	0	4233	17798	0	4488
(1.8+1.8+5)+(1.8+2.5+3.5)	16	5184	0	2812	8208	0	2888	9357	0	3011	10123	0	3093	12326	0	3462	14558	0	3507	15883	0	3602	18331	0	3781
	18	5112	0	2850	8136	0	2926	9268	0	3074	10022	0	3173	12197	0	3549	14486	0	3686	15826	0	3762	18259	0	3960
	20	5040	0	2888	8064	0	2964	9187	0	3124	9936	0	3230	12096	0	3610	14400	0	3800	15480	0	3933	18144	0	4142
	22	4968	0	2926	7992	0	3002	9072	0	3189	9792	0	3314	11966	0	3697	14314	0	3952	15653	0	4077	18058	0	4313
	24	4896	0	2964	7920	0	3040	8991	0	3252	9706	0	3393	11866	0	3785	14227	0	4104	15566	0	4233	17798	0	4488
(1.8+1.8+3.5)+(1.8+3.5+3.5)	16	5184	0	2812	8208	0	2888	9357	0	3011	10123	0	3093	12326	0	3462	14558	0	3507	15883	0	3602	18331	0	3781
	18	5112	0	2850	8136	0	2926	9268	0	3074	10022	0	3173	12197	0	3549	14486	0	3686	15826	0	3762	18259	0	3960
	20	5040	0	2888	8064	0	2964	9187	0	3124	9936	0	3230	12096	0	3610	14400	0	3800	15480	0	3933	18144	0	4142
	22	4968	0	2926	7992	0	3002	9072	0	3189	9792	0	3314	11966	0	3697	14314	0	3952	15653	0	4077	18058	0	4313
	24	4896	0	2964	7920	0	3040	8991	0	3252	9706	0	3393	11866	0	3785	14227	0	4104	15566	0	4233	17798	0	4488
(1.8+1.8+5)+(1.8+3.5+3.5)	16	5184	0	2812	8208	0	2888	9357	0	3011	10123	0	3093	12326	0	3462	14558	0	3507	15883	0	3602	18331	0	3781
	18	5112	0	2850	8136	0	2926	9268	0	3074	10022	0	3173	12197	0	3549	14486	0	3686	15826	0	3762	18259	0	3960
	20	5040	0	2888	8064	0	2964	9187	0	3124	9936	0	3230	12096	0	3610	14400	0	3800	15480	0	3933	18144	0	4142
	22	4968	0	2926	7992	0	3002	9072	0	3189	9792	0	3314	11966	0	3697	14314	0	3952	15653	0	4077	18058	0	4313
	24	4896	0	2964	7920	0	3040	8991	0	3252	9706	0	3393	11866	0	3785	14227	0	4104	15566	0	4233	17798	0	4488
(1.8+2.5+2.5)+(1.8+2.5+2.5)	16	5184	0	2812	8208	0	2888	9357	0	3011	10123	0	3093	12326	0	3462	14558	0	3507	15883	0	3602	18331	0	3781
	18	5112	0	2850	8136	0	2926	9268	0	3074	10022	0	3173	12197	0	3549	14486	0	3686	15826	0	3762	18259	0	3960
	20	5040	0	2888	8064	0	2964	9187	0	3124	9936	0	3230	12096	0	3610	14400	0	3800	15480	0	3933	18144	0	4142
	22	4968	0	2926	7992	0	3002	9072	0	3189	9792	0	3314	11966	0	3697	14314	0	3952	15653	0	4077	18058	0	4313
	24	4896	0	2964	7920	0	3040	8991	0	3252	9706	0	3393	11866	0	3785	14227	0	4104	15566	0	4233	17798	0	4488
(1.8+2.5+2.5)+(1.8+2.5+3.5)	16	5184	0	2812	8208	0	2888	9357	0	3011	10123	0	3093	12326	0	3462	14558	0	3507	15883	0	3602	18331	0	3781
	18	5112	0	2850	8136	0	2926	9268	0	3074	10022	0	3173	12197	0	3549	14486	0	3686	15826	0	3762	18259	0	3960
	20	5040	0	2888	8064	0	2964	9187	0	3124	9936	0	3230	12096	0	3610	14400	0	3800	15480	0	3933	18144	0	4142
	22	4968	0	2926	7992	0	3002	9072	0	3189	9792	0	3314	11966	0	3697	14314	0	3952	15653	0	4077	18058	0	4313
	24	4896	0	2964	7920	0	3040	8991	0	3252	9706	0	3393	11866	0	3785	14227	0	4104	15566	0	4233	17798	0	4488
(1.8+1.8+5)+(2.5+2.5+2.5)	16	5184	0	2812	8208	0	2888	9357	0	3011	10123	0	3093	12326	0	3462	14558	0	3507	15883	0	3602	18331	0	3781
	18	5112	0	2850	8136	0	2926	9268	0	3074	10022	0	3173	12197	0	3549	14486	0	3686	15826	0	3762	18259	0	3960
	20	5040	0	2888	8064	0	2964	9187	0	3124	9936	0	3230	12096	0	3610	14400	0	3800	15480	0	3933	18144	0	4142
	22	4968	0	2926	7992	0	3002	9072	0	3189	9792	0	3314	11966	0	3697	14314	0	3952	15653	0	4077	18058	0	4313
	24	4896	0	2964	7920	0	3040	8991	0	3252	9706	0	3393	11866	0	3785	14227	0	4104	15566	0	4233	17798	0	4488
(1.8+2.5+3.5)+(1.8+2.5+3.5)	16	5184	0	2812	8208	0	2888	9357	0	3011	10123	0	3093	12326	0	3462	14558	0	3507	15883	0	3602	18331	0	3781
	18	5112	0	2850	8136	0	2926	9268	0	3074	10022	0	3173	12197	0	3549	14486	0	3686	15826	0	3762	18259	0	3960
	20	5040	0	2888	8064	0	2964	9187	0	3124	9936	0	3230	12096	0	3610	14400	0	3800	15480	0	3933	18144	0	4142
	22	4968	0	2926	7992	0	3002	9072	0	3189	9792	0	3314	11966	0	3697	14314	0	3952	15653	0	4077	18058	0	4313
	24	4896	0	2964	7920	0	3040	8991	0	3252	9706	0	3393	11866	0	3785	14227	0	4104	15566	0	4233	17798	0	4488

EWB : Evaporator Wet Bulb temperature (°C)

EDB : Evaporator Dry Bulb temperature (°C)

(°CDB) : Outdoor Unit Inlet Air Dry Temperature (°C)

TC : Total Capacity (W)

SHC : Sensible Heating Capacity (W)

PI : Power Input

	INDOOR	OUTDOOR TEMPERATURE (°CDW)																							
	EDB	-15			-10			-7			-5			0			7			10			15		
	°C	TC	SHC	PI	TC	SHC	PI	TC	SHC	PI	TC	SHC	PI	TC	SHC	PI	TC	SHC	PI	TC	SHC	PI	TC	SHC	PI
(1.8+1.8+5)+(2.5+2.5+3.5)	16	5184	0	2812	8208	0	2888	9357	0	3011	10123	0	3093	12326	0	3462	14558	0	3507	15883	0	3602	18331	0	3781
	18	5112	0	2850	8136	0	2926	9268	0	3074	10022	0	3173	12197	0	3549	14486	0	3686	15826	0	3762	18259	0	3960
	20	5040	0	2888	8064	0	2964	9187	0	3124	9936	0	3230	12096	0	3610	14400	0	3800	15480	0	3933	18144	0	4142
	22	4968	0	2926	7992	0	3002	9072	0	3189	9792	0	3314	11966	0	3697	14314	0	3952	15653	0	4077	18058	0	4313
	24	4896	0	2964	7920	0	3040	8991	0	3252	9706	0	3393	11866	0	3785	14227	0	4104	15566	0	4233	17798	0	4488
(1.8+2.5+3.5)+(1.8+3.5+3.5)	16	5184	0	2812	8208	0	2888	9357	0	3011	10123	0	3093	12326	0	3462	14558	0	3507	15883	0	3602	18331	0	3781
	18	5112	0	2850	8136	0	2926	9268	0	3074	10022	0	3173	12197	0	3549	14486	0	3686	15826	0	3762	18259	0	3960
	20	5040	0	2888	8064	0	2964	9187	0	3124	9936	0	3230	12096	0	3610	14400	0	3800	15480	0	3933	18144	0	4142
	22	4968	0	2926	7992	0	3002	9072	0	3189	9792	0	3314	11966	0	3697	14314	0	3952	15653	0	4077	18058	0	4313
	24	4896	0	2964	7920	0	3040	8991	0	3252	9706	0	3393	11866	0	3785	14227	0	4104	15566	0	4233	17798	0	4488
(1.8+3.5+3.5)+(1.8+3.5+3.5)	16	5184	0	2812	8208	0	2888	9357	0	3011	10123	0	3093	12326	0	3462	14558	0	3507	15883	0	3602	18331	0	3781
	18	5112	0	2850	8136	0	2926	9268	0	3074	10022	0	3173	12197	0	3549	14486	0	3686	15826	0	3762	18259	0	3960
	20	5040	0	2888	8064	0	2964	9187	0	3124	9936	0	3230	12096	0	3610	14400	0	3800	15480	0	3933	18144	0	4142
	22	4968	0	2926	7992	0	3002	9072	0	3189	9792	0	3314	11966	0	3697	14314	0	3952	15653	0	4077	18058	0	4313
	24	4896	0	2964	7920	0	3040	8991	0	3252	9706	0	3393	11866	0	3785	14227	0	4104	15566	0	4233	17798	0	4488
(1.8+2.5+2.5)+(2.5+2.5+2.5)	16	5184	0	2812	8208	0	2888	9357	0	3011	10123	0	3093	12326	0	3462	14558	0	3507	15883	0	3602	18331	0	3781
	18	5112	0	2850	8136	0	2926	9268	0	3074	10022	0	3173	12197	0	3549	14486	0	3686	15826	0	3762	18259	0	3960
	20	5040	0	2888	8064	0	2964	9187	0	3124	9936	0	3230	12096	0	3610	14400	0	3800	15480	0	3933	18144	0	4142
	22	4968	0	2926	7992	0	3002	9072	0	3189	9792	0	3314	11966	0	3697	14314	0	3952	15653	0	4077	18058	0	4313
	24	4896	0	2964	7920	0	3040	8991	0	3252	9706	0	3393	11866	0	3785	14227	0	4104	15566	0	4233	17798	0	4488
(1.8+2.5+3.5)+(2.5+2.5+2.5)	16	5184	0	2812	8208	0	2888	9357	0	3011	10123	0	3093	12326	0	3462	14558	0	3507	15883	0	3602	18331	0	3781
	18	5112	0	2850	8136	0	2926	9268	0	3074	10022	0	3173	12197	0	3549	14486	0	3686	15826	0	3762	18259	0	3960
	20	5040	0	2888	8064	0	2964	9187	0	3124	9936	0	3230	12096	0	3610	14400	0	3800	15480	0	3933	18144	0	4142
	22	4968	0	2926	7992	0	3002	9072	0	3189	9792	0	3314	11966	0	3697	14314	0	3952	15653	0	4077	18058	0	4313
	24	4896	0	2964	7920	0	3040	8991	0	3252	9706	0	3393	11866	0	3785	14227	0	4104	15566	0	4233	17798	0	4488
(1.8+2.5+3.5)+(2.5+2.5+3.5)	16	5184	0	2812	8208	0	2888	9357	0	3011	10123	0	3093	12326	0	3462	14558	0	3507	15883	0	3602	18331	0	3781
	18	5112	0	2850	8136	0	2926	9268	0	3074	10022	0	3173	12197	0	3549	14486	0	3686	15826	0	3762	18259	0	3960
	20	5040	0	2888	8064	0	2964	9187	0	3124	9936	0	3230	12096	0	3610	14400	0	3800	15480	0	3933	18144	0	4142
	22	4968	0	2926	7992	0	3002	9072	0	3189	9792	0	3314	11966	0	3697	14314	0	3952	15653	0	4077	18058	0	4313
	24	4896	0	2964	7920	0	3040	8991	0	3252	9706	0	3393	11866	0	3785	14227	0	4104	15566	0	4233	17798	0	4488
(1.8+3.5+3.5)+(2.5+2.5+3.5)	16	5184	0	2812	8208	0	2888	9357	0	3011	10123	0	3093	12326	0	3462	14558	0	3507	15883	0	3602	18331	0	3781
	18	5112	0	2850	8136	0	2926	9268	0	3074	10022	0	3173	12197	0	3549	14486	0	3686	15826	0	3762	18259	0	3960
	20	5040	0	2888	8064	0	2964	9187	0	3124	9936	0	3230	12096	0	3610	14400	0	3800	15480	0	3933	18144	0	4142
	22	4968	0	2926	7992	0	3002	9072	0	3189	9792	0	3314	11966	0	3697	14314	0	3952	15653	0	4077	18058	0	4313
	24	4896	0	2964	7920	0	3040	8991	0	3252	9706	0	3393	11866	0	3785	14227	0	4104	15566	0	4233	17798	0	4488
(2.5+2.5+2.5)+(2.5+2.5+2.5)	16	5184	0	2812	8208	0	2888	9357	0	3011	10123	0	3093	12326	0	3462	14558	0	3507	15883	0	3602	18331	0	3781
	18	5112	0	2850	8136	0	2926	9268	0	3074	10022	0	3173	12197	0	3549	14486	0	3686	15826	0	3762	18259	0	3960
	20	5040	0	2888	8064	0	2964	9187	0	3124	9936	0	3230	12096	0	3610	14400	0	3800	15480	0	3933	18144	0	4142
	22	4968	0	2926	7992	0	3002	9072	0	3189	9792	0	3314	11966	0	3697	14314	0	3952	15653	0	4077	18058	0	4313
	24	4896	0	2964	7920	0	3040	8991	0	3252	9706	0	3393	11866	0	3785	14227	0	4104	15566	0	4233	17798	0	4488

EWB : Evaporator Wet Bulb temperature (°C)

EDB : Evaporator Dry Bulb temperature (°C)

(°CDB) : Outdoor Unit Inlet Air Dry Temperature (°C)

TC : Total Capacity (W)

SHC : Sensible Heating Capacity (W)

PI : Power Input

	INDOOR	OUTDOOR TEMPERATURE (°CDW)																							
	EDB	-15			-10			-7			-5			0			7			10			15		
	°C	TC	SHC	PI	TC	SHC	PI	TC	SHC	PI	TC	SHC	PI	TC	SHC	PI	TC	SHC	PI	TC	SHC	PI	TC	SHC	PI
(2.5+2.5+2.5) +(2.5+2.5+3.5)	16	5184	0	2812	8208	0	2888	9357	0	3011	10123	0	3093	12326	0	3462	14558	0	3507	15883	0	3602	18331	0	3781
	18	5112	0	2850	8136	0	2926	9268	0	3074	10022	0	3173	12197	0	3549	14486	0	3686	15826	0	3762	18259	0	3960
	20	5040	0	2888	8064	0	2964	9187	0	3124	9936	0	3230	12096	0	3610	14400	0	3800	15480	0	3933	18144	0	4142
	22	4968	0	2926	7992	0	3002	9072	0	3189	9792	0	3314	11966	0	3697	14314	0	3952	15653	0	4077	18058	0	4313
	24	4896	0	2964	7920	0	3040	8991	0	3252	9706	0	3393	11866	0	3785	14227	0	4104	15566	0	4233	17798	0	4488
(2.5+2.5+3.5) +(2.5+2.5+3.5)	16	5184	0	2812	8208	0	2888	9357	0	3011	10123	0	3093	12326	0	3462	14558	0	3507	15883	0	3602	18331	0	3781
	18	5112	0	2850	8136	0	2926	9268	0	3074	10022	0	3173	12197	0	3549	14486	0	3686	15826	0	3762	18259	0	3960
	20	5040	0	2888	8064	0	2964	9187	0	3124	9936	0	3230	12096	0	3610	14400	0	3800	15480	0	3933	18144	0	4142
	22	4968	0	2926	7992	0	3002	9072	0	3189	9792	0	3314	11966	0	3697	14314	0	3952	15653	0	4077	18058	0	4313
	24	4896	0	2964	7920	0	3040	8991	0	3252	9706	0	3393	11866	0	3785	14227	0	4104	15566	0	4233	17798	0	4488

EWB : Evaporator Wet Bulb temperature (°C)
EDB : Evaporator Dry Bulb temperature (°C)
(°CDB) : Outdoor Unit Inlet Air Dry Temperature (°C)

TC : Total Capacity (W)
SHC : Sensible Heating Capacity (W)
PI : Power Input

4.3. CAPACITY CHARACTERISTIC CURVES FOR MONO - SPLIT

4.3.1. RAK-25PXA/RAC-25WXA

COOLING [50Hz, 230V]

INDOOR		OUTDOOR TEMPERATURE (°CDB)																				
EWB	EDB	-10			21			27			32			35			40			43		
°C	°C	TC	SHC	PI	TC	SHC	PI	TC	SHC	PI	TC	SHC	PI	TC	SHC	PI	TC	SHC	PI	TC	SHC	PI
12.0	18	2490	1966	414	2162	2009	377	2001	1855	444	2050	1911	534	1975	1827	557	1850	1722	597	1775	1638	621
14.0	20	2490	1966	414	2323	2009	377	2162	1874	450	2200	1911	539	2125	1848	563	1975	1722	603	1900	1659	632
16.0	22	2490	2092	421	2484	2009	382	2300	1874	455	2350	1911	545	2275	1848	574	2125	1722	615	2050	1659	638
18.0	25	2670	2243	427	2645	2183	387	2438	2029	460	2500	2079	551	2400	1995	574	2250	1869	621	2150	1785	644
19.0	27	2760	2318	434	2737	2299	392	2530	2125	465	2600	2184	557	2500	2100	580	2350	1974	621	2250	1890	644
22.0	30	3060	2293	434	3036	2280	392	2806	2106	465	2875	2163	563	2775	2079	586	2500	2016	644	2325	1974	679
24.0	32	3270	2293	440	3243	2280	397	2990	2106	471	3075	2163	563	2950	2079	592	2600	2058	661	2375	2037	702

HEATING [50Hz, 230V]

INDOOR		OUTDOOR TEMPERATURE (°CDB)																					
	EDB	-15			-10			-7			-5			0			7			10			15		
	°C	TC	SHC	PI	TC	SHC	PI	TC	SHC	PI	TC	SHC	PI	TC	SHC	PI	TC	SHC	PI	TC	SHC	PI	TC	SHC	PI
	16	1224	0	585	1938	0	600	2209	0	626	2390	0	643	2910	0	720	3437	0	729	3750	0	749	4328	0	786
	18	1207	0	593	1921	0	608	2188	0	639	2366	0	660	2880	0	738	3420	0	766	3737	0	782	4311	0	823
	20	1190	0	600	1904	0	616	2169	0	649	2346	0	672	2856	0	751	3400	0	790	3655	0	818	4284	0	861
	22	1173	0	608	1887	0	624	2142	0	663	2312	0	689	2825	0	769	3380	0	822	3696	0	848	4264	0	897
	24	1156	0	616	1870	0	632	2123	0	676	2292	0	705	2802	0	787	3359	0	853	3675	0	880	4202	0	933

4.3.2. RAK-35PXA/RAC-35WXA

COOLING [50Hz, 230V]

INDOOR		OUTDOOR TEMPERATURE (°CDB)																				
EWB	EDB	-10			21			27			32			35			40			43		
°C	°C	TC	SHC	PI	TC	SHC	PI	TC	SHC	PI	TC	SHC	PI	TC	SHC	PI	TC	SHC	PI	TC	SHC	PI
12.0	18	2293	1601	432	2338	1921	462	2164	1773	545	2870	2366	846	2765	2262	883	2590	2132	948	2485	2028	984
14.0	20	2293	1601	432	2512	1921	462	2338	1792	551	3080	2366	856	2975	2288	892	2765	2132	957	2660	2054	1003
16.0	22	2293	1704	439	2686	1921	468	2487	1792	557	3290	2366	865	3185	2288	911	2975	2132	975	2870	2054	1012
18.0	25	2459	1827	446	2860	2088	474	2636	1940	564	3500	2574	874	3360	2470	911	3150	2314	984	3010	2210	1021
19.0	27	2542	1888	453	2959	2198	480	2736	2032	570	3640	2704	883	3500	2600	920	3290	2444	984	3150	2340	1021
22.0	30	2818	1868	453	3283	2180	480	3034	2014	570	4025	2678	892	3885	2574	929	3500	2496	1021	3255	2444	1076
24.0	32	3012	1868	459	3506	2180	486	3233	2014	577	4305	2678	892	4130	2574	938	3640	2548	1049	3325	2522	1113

HEATING [50Hz, 230V]

INDOOR		OUTDOOR TEMPERATURE (°CDB)																					
	EDB	-15			-10			-7			-5			0			7			10			15		
	°C	TC	SHC	PI	TC	SHC	PI	TC	SHC	PI	TC	SHC	PI	TC	SHC	PI	TC	SHC	PI	TC	SHC	PI	TC	SHC	PI
	16	1512	0	747	2394	0	768	2729	0	800	2953	0	822	3595	0	920	4246	0	932	4633	0	957	5347	0	1005
	18	1491	0	758	2373	0	778	2703	0	817	2923	0	843	3557	0	943	4225	0	980	4616	0	1000	5326	0	1052
	20	1470	0	768	2352	0	788	2680	0	830	2898	0	859	3528	0	960	4200	0	1010	4515	0	1045	5292	0	1101
	22	1449	0	778	2331	0	798	2646	0	848	2856	0	881	3490	0	983	4175	0	1050	4565	0	1084	5267	0	1146
	24	1428	0	788	2310	0	808	2622	0	864	2831	0	902	3461	0	1006	4150	0	1091	4540	0	1125	5191	0	1193

EWB : Evaporator Wet Bulb temperature (°C)
EDB : Evaporator Dry Bulb temperature (°C)
(°CDB) : Outdoor Unit Inlet Air Dry Temperature (°C)

TC : Total Capacity (W)
SHC : Sensible Heating Capacity (W)
PI : Power Input

4.3.3. RAK-50PXA/RAC-50WXA

COOLING [50Hz, 230V]

INDOOR		OUTDOOR TEMPERATURE (°CDB)																				
EWB	EDB	-10			21			27			32			35			40			43		
°C	°C	TC	SHC	PI	TC	SHC	PI	TC	SHC	PI	TC	SHC	PI	TC	SHC	PI	TC	SHC	PI	TC	SHC	PI
12.0	18	2919	1873	651	4700	3551	1099	4350	3277	1295	4100	3107	1431	3950	2970	1493	3700	2799	1602	3550	2663	1664
14.0	20	2919	1873	651	5050	3551	1099	4700	3312	1311	4400	3107	1446	4250	3004	1508	3950	2799	1617	3800	2697	1695
16.0	22	2919	1993	661	5400	3551	1114	5000	3312	1326	4700	3107	1462	4550	3004	1539	4250	2799	1648	4100	2697	1711
18.0	25	3130	2137	671	5750	3858	1128	5300	3585	1341	5000	3380	1477	4800	3243	1539	4500	3038	1664	4300	2902	1726
19.0	27	3235	2209	681	5950	4063	1142	5500	3755	1356	5200	3551	1493	5000	3414	1555	4700	3209	1664	4500	3073	1726
22.0	30	3587	2185	681	6600	4029	1142	6100	3721	1356	5750	3516	1508	5550	3380	1571	5000	3277	1726	4650	3209	1819
24.0	32	3833	2185	692	7050	4029	1157	6500	3721	1372	6150	3516	1508	5900	3380	1586	5200	3346	1773	4750	3312	1882

HEATING [50Hz, 230V]

INDOOR		OUTDOOR TEMPERATURE (°CDB)																				
	EDB	-15			-10			-7			-5			0			7			10			15		
	°C	TC	SHC	PI	TC	SHC	PI	TC	SHC	PI	TC	SHC	PI	TC	SHC	PI	TC	SHC	PI	TC	SHC	PI	TC	SHC	PI
	16	2268	0	1291	3591	0	1326	4094	0	1383	4429	0	1420	5393	0	1590	6369	0	1611	6949	0	1654	8020	0	1736
	18	2237	0	1309	3560	0	1344	4055	0	1412	4385	0	1457	5336	0	1630	6338	0	1693	6924	0	1728	7988	0	1818
	20	2205	0	1326	3528	0	1361	4019	0	1434	4347	0	1483	5292	0	1658	6300	0	1745	6773	0	1806	7938	0	1902
	22	2174	0	1344	3497	0	1379	3969	0	1464	4284	0	1522	5235	0	1698	6262	0	1815	6848	0	1872	7900	0	1981
	24	2142	0	1361	3465	0	1396	3934	0	1493	4246	0	1558	5191	0	1738	6224	0	1885	6810	0	1944	7787	0	2061

EWB : Evaporator Wet Bulb temperature (°C)
EDB : Evaporator Dry Bulb temperature (°C)
(°CDB) : Outdoor Unit Inlet Air Dry Temperature (°C)

TC : Total Capacity (W)
SHC : Sensible Heating Capacity (W)
PI : Power Input

4.3.4. RAF-25RPA/RAC-25FPA

COOLING [50Hz, 230V]

INDOOR		OUTDOOR TEMPERATURE (°CDB)																				
EWB	EDB	-10			21			27			32			35			40			43		
°C	°C	TC	SHC	PI	TC	SHC	PI	TC	SHC	PI	TC	SHC	PI	TC	SHC	PI	TC	SHC	PI	TC	SHC	PI
12.0	18	2767	2392	532	3342	3402	674	3093	3140	794	2050	2093	616	1975	2001	643	1850	1886	690	1775	1794	717
14.0	20	2767	2392	532	3591	3402	674	3342	3173	803	2200	2093	623	2125	2024	650	1975	1886	697	1900	1817	730
16.0	22	2767	2545	540	3840	3402	682	3556	3173	812	2350	2093	630	2275	2024	663	2125	1886	710	2050	1817	737
18.0	25	2967	2729	548	4089	3696	691	3769	3435	822	2500	2277	637	2400	2185	663	2250	2047	717	2150	1955	744
19.0	27	3067	2821	557	4231	3893	700	3911	3598	831	2600	2392	643	2500	2300	670	2350	2162	717	2250	2070	744
22.0	30	3400	2791	557	4693	3860	700	4338	3566	831	2875	2369	650	2775	2277	677	2500	2208	744	2325	2162	784
24.0	32	3633	2791	565	5013	3860	709	4622	3566	840	3075	2369	650	2950	2277	683	2600	2254	764	2375	2231	811

HEATING [50Hz, 230V]

INDOOR		OUTDOOR TEMPERATURE (°CDB)																					
	EDB	-15			-10			-7			-5			0			7			10			15		
	°C	TC	SHC	PI	TC	SHC	PI	TC	SHC	PI	TC	SHC	PI	TC	SHC	PI	TC	SHC	PI	TC	SHC	PI	TC	SHC	PI
	16	1224	0	629	1938	0	646	2209	0	674	2390	0	692	2910	0	774	3437	0	785	3750	0	806	4328	0	846
	18	1207	0	638	1921	0	655	2188	0	688	2366	0	710	2880	0	794	3420	0	825	3737	0	842	4311	0	886
	20	1190	0	646	1904	0	663	2169	0	699	2346	0	723	2856	0	808	3400	0	850	3655	0	880	4284	0	927
	22	1173	0	655	1887	0	672	2142	0	713	2312	0	741	2825	0	827	3380	0	884	3696	0	912	4264	0	965
	24	1156	0	663	1870	0	680	2123	0	727	2292	0	759	2802	0	847	3359	0	918	3675	0	947	4202	0	1004

4.3.5. RAF-35RPA/RAC-35FPA

COOLING [50Hz, 230V]

INDOOR		OUTDOOR TEMPERATURE (°CDB)																				
EWB	EDB	-10			21			27			32			35			40			43		
°C	°C	TC	SHC	PI	TC	SHC	PI	TC	SHC	PI	TC	SHC	PI	TC	SHC	PI	TC	SHC	PI	TC	SHC	PI
12.0	18	2490	1939	480	2961	2714	598	2741	2506	705	2870	2639	865	2765	2523	902	2590	2378	968	2485	2262	1006
14.0	20	2490	1939	480	3182	2714	598	2961	2532	713	3080	2639	874	2975	2552	912	2765	2378	978	2660	2291	1025
16.0	22	2490	2063	487	3402	2714	606	3150	2532	721	3290	2639	884	3185	2552	931	2975	2378	996	2870	2291	1034
18.0	25	2670	2212	495	3623	2949	614	3339	2741	730	3500	2871	893	3360	2755	931	3150	2581	1006	3010	2465	1043
19.0	27	2760	2287	502	3749	3106	622	3465	2871	738	3640	3016	902	3500	2900	940	3290	2726	1006	3150	2610	1043
22.0	30	3060	2262	502	4158	3080	622	3843	2845	738	4025	2987	912	3885	2871	949	3500	2784	1043	3255	2726	1100
24.0	32	3270	2262	510	4442	3080	629	4095	2845	746	4305	2987	912	4130	2871	959	3640	2842	1072	3325	2813	1137

HEATING [50Hz, 230V]

INDOOR		OUTDOOR TEMPERATURE (°CDB)																					
	EDB	-15			-10			-7			-5			0			7			10			15		
	°C	TC	SHC	PI	TC	SHC	PI	TC	SHC	PI	TC	SHC	PI	TC	SHC	PI	TC	SHC	PI	TC	SHC	PI	TC	SHC	PI
	16	1512	0	777	2394	0	798	2729	0	832	2953	0	855	3595	0	957	4246	0	969	4633	0	995	5347	0	1045
	18	1491	0	788	2373	0	809	2703	0	849	2923	0	877	3557	0	981	4225	0	1019	4616	0	1040	5326	0	1094
	20	1470	0	798	2352	0	819	2680	0	863	2898	0	893	3528	0	998	4200	0	1050	4515	0	1087	5292	0	1145
	22	1449	0	809	2331	0	830	2646	0	881	2856	0	916	3490	0	1022	4175	0	1092	4565	0	1127	5267	0	1192
	24	1428	0	819	2310	0	840	2622	0	899	2831	0	938	3461	0	1046	4150	0	1134	4540	0	1170	5191	0	1240

EWB : Evaporator Wet Bulb temperature (°C)
EDB : Evaporator Dry Bulb temperature (°C)
(°CDB) : Outdoor Unit Inlet Air Dry Temperature (°C)

TC : Total Capacity (W)
SHC : Sensible Heating Capacity (W)
PI : Power Input

4.3.6. RAF-50RPA/RAC-50FPA

COOLING [50Hz, 230V]

INDOOR		OUTDOOR TEMPERATURE (°CDB)																				
EWB	EDB	-10			21			27			32			35			40			43		
°C	°C	TC	SHC	PI	TC	SHC	PI	TC	SHC	PI	TC	SHC	PI	TC	SHC	PI	TC	SHC	PI	TC	SHC	PI
12.0	18	2964	2117	642	2910	2446	661	2693	2258	779	4100	3458	1389	3950	3306	1450	3700	3116	1555	3550	2964	1616
14.0	20	2964	2117	642	3126	2446	661	2910	2282	788	4400	3458	1404	4250	3344	1465	3950	3116	1570	3800	3002	1646
16.0	22	2964	2253	652	3343	2446	669	3095	2282	797	4700	3458	1419	4550	3344	1495	4250	3116	1601	4100	3002	1661
18.0	25	3179	2416	662	3560	2658	678	3281	2470	806	5000	3762	1435	4800	3610	1495	4500	3382	1616	4300	3230	1676
19.0	27	3286	2497	672	3683	2799	687	3405	2588	815	5200	3952	1450	5000	3800	1510	4700	3572	1616	4500	3420	1676
22.0	30	3643	2470	672	4086	2776	687	3776	2564	815	5750	3914	1465	5550	3762	1525	5000	3648	1676	4650	3572	1767
24.0	32	3893	2470	682	4364	2776	695	4024	2564	824	6150	3914	1465	5900	3762	1540	5200	3724	1721	4750	3686	1827

HEATING [50Hz, 230V]

INDOOR		OUTDOOR TEMPERATURE (°CDB)																				
	EDB	-15			-10			-7			-5			0			7			10			15		
	°C	TC	SHC	PI	TC	SHC	PI	TC	SHC	PI	TC	SHC	PI	TC	SHC	PI	TC	SHC	PI	TC	SHC	PI	TC	SHC	PI
	16	2160	0	1228	3420	0	1262	3899	0	1315	4218	0	1351	5136	0	1512	6066	0	1532	6618	0	1574	7638	0	1652
	18	2130	0	1245	3390	0	1278	3862	0	1343	4176	0	1386	5082	0	1550	6036	0	1610	6594	0	1643	7608	0	1730
	20	2100	0	1262	3360	0	1295	3828	0	1365	4140	0	1411	5040	0	1577	6000	0	1660	6450	0	1718	7560	0	1809
	22	2070	0	1278	3330	0	1311	3780	0	1393	4080	0	1448	4986	0	1615	5964	0	1726	6522	0	1781	7524	0	1884
	24	2040	0	1295	3300	0	1328	3746	0	1421	4044	0	1482	4944	0	1653	5928	0	1793	6486	0	1849	7416	0	1960

4.3.7. RAK-18PSA/RAC-18WSA

COOLING [50Hz, 230V]

INDOOR		OUTDOOR TEMPERATURE (°CDB)																				
EWB	EDB	-10			21			27			32			35			40			43		
°C	°C	TC	SHC	PI	TC	SHC	PI	TC	SHC	PI	TC	SHC	PI	TC	SHC	PI	TC	SHC	PI	TC	SHC	PI
12.0	18	3864	3540	462	2480	2675	311	2295	2469	366	1476	1597	276	1422	1527	288	1332	1439	309	1278	1368	321
14.0	20	3864	3540	462	2664	2675	311	2480	2495	371	1584	1597	279	1530	1544	291	1422	1439	312	1368	1386	327
16.0	22	3864	3767	469	2849	2675	315	2638	2495	375	1692	1597	282	1638	1544	297	1530	1439	318	1476	1386	330
18.0	25	4143	4040	476	3034	2906	319	2796	2701	379	1800	1737	285	1728	1667	297	1620	1562	321	1548	1492	333
19.0	27	4283	4176	483	3139	3061	323	2902	2829	383	1872	1825	288	1800	1755	300	1692	1649	321	1620	1579	333
22.0	30	4748	4130	483	3482	3035	323	3218	2803	383	2070	1808	291	1998	1737	303	1800	1684	333	1674	1649	351
24.0	32	5074	4130	491	3719	3035	327	3429	2803	388	2214	1808	291	2124	1737	306	1872	1719	342	1710	1702	363

HEATING [50Hz, 230V]

INDOOR		OUTDOOR TEMPERATURE (°CDB)																				
	EDB	-15			-10			-7			-5			0			7			10			15		
	°C	TC	SHC	PI	TC	SHC	PI	TC	SHC	PI	TC	SHC	PI	TC	SHC	PI	TC	SHC	PI	TC	SHC	PI	TC	SHC	PI
	16	2357	0	1081	2687	0	1151	2901	0	1204	3043	0	1239	3396	0	1302	2325	0	346	2537	0	356	2928	0	373
	18	2334	0	1070	2664	0	1135	2874	0	1179	3013	0	1208	3360	0	1271	2314	0	364	2528	0	371	2916	0	391
	20	2300	0	1055	2640	0	1120	2848	0	1159	2987	0	1185	3332	0	1250	2300	0	375	2473	0	388	2898	0	409
	22	2269	0	1117	2618	0	1108	2813	0	1137	2944	0	1156	3296	0	1250	2286	0	390	2500	0	402	2884	0	426
	24	2234	0	1026	2593	0	1094	2787	0	1115	2917	0	1128	3268	0	1190	2272	0	405	2486	0	418	2843	0	443

EWB : Evaporator Wet Bulb temperature (°C)
EDB : Evaporator Dry Bulb temperature (°C)
(°CDB) : Outdoor Unit Inlet Air Dry Temperature (°C)

TC : Total Capacity (W)
SHC : Sensible Heating Capacity (W)
PI : Power Input

4.3.8. RAK-25PSA/RAC-25WSA

COOLING [50Hz, 230V]

INDOOR		OUTDOOR TEMPERATURE (°CDB)																				
EWB	EDB	-10			21			27			32			35			40			43		
°C	°C	TC	SHC	PI	TC	SHC	PI	TC	SHC	PI	TC	SHC	PI	TC	SHC	PI	TC	SHC	PI	TC	SHC	PI
12.0	18	3458	2812	466	2742	2624	388	2538	2423	457	2050	1968	432	1975	1882	451	1850	1773	484	1775	1687.	503
14.0	20	3458	2812	466	2946	2624	388	2742	2448	462	2200	1968	437	2125	1903	456	1975	1773	489	1900	1709	512
16.0	22	3458	2992	474	3150	2624	393	2917	2448	468	2350	1968	442	2275	1903	465	2125	1773	498	2050	1709	517
18.0	25	3708	3208	481	3354	2852	398	3092	2650	473	2500	2141	447	2400	2055	465	2250	1925	503	2150	1839	522
19.0	27	3833	3317	488	3471	3003	403	3208	2776	478	2600	2250	451	2500	2163	470	2350	2033	503	2250	1946	522
22.0	30	4250	3281	488	3850	2978	403	3558	2751	478	2875	2228	456	2775	2141	475	2500	2076	522	2325	2033	550
24.0	32	4542	3281	495	4113	2978	408	3792	2751	484	3075	2228	456	2950	2141	479	2600	2119	536	2375	2098	569

HEATING [50Hz, 230V]

INDOOR		OUTDOOR TEMPERATURE (°CDB)																				
	EDB	-15			-10			-7			-5			0			7			10			15		
	°C	TC	SHC	PI	TC	SHC	PI	TC	SHC	PI	TC	SHC	PI	TC	SHC	PI	TC	SHC	PI	TC	SHC	PI	TC	SHC	PI
	16	3279	0	1505	3556	0	1591	3738	0	1658	3859	0	1703	4160	0	1779	3235	0	526	3530	0	540	4074	0	567
	18	3247	0	1489	3526	0	1569	3703	0	1624	3821	0	1661	4116	0	1738	3219	0	553	3517	0	564	4058	0	594
	20	3200	0	1468	3494	0	1548	3670	0	1597	3788	0	1629	4082	0	1709	3200	0	570	3440	0	590	4032	0	621
	22	3157	0	1555	3464	0	1532	3626	0	1566	3734	0	1589	4038	0	1709	3181	0	593	3478	0	612	4013	0	647
	24	3108	0	1428	3432	0	1512	3592	0	1535	3699	0	1551	4004	0	1627	3162	0	616	3459	0	635	3955	0	673

4.3.9. RAK-35PSA/RAC-35WSA

COOLING [50Hz, 230V]

INDOOR		OUTDOOR TEMPERATURE (°CDB)																				
EWB	EDB	-10			21			27			32			35			40			43		
°C	°C	TC	SHC	PI	TC	SHC	PI	TC	SHC	PI	TC	SHC	PI	TC	SHC	PI	TC	SHC	PI	TC	SHC	PI
12.0	18	3113	2256	542	3466	2958	633	3208	2731	746	2870	2457	782	2765	2349	816	2590	2214	876	2485	2106	910
14.0	20	3113	2256	542	3724	2958	633	3466	2759	755	3080	2457	791	2975	2376	825	2765	2214	884	2660	2133	927
16.0	22	3113	2401	551	3983	2958	641	3688	2759	764	3290	2457	799	3185	2376	842	2975	2214	901	2870	2133	935
18.0	25	3338	2575	559	4241	3214	650	3909	2987	772	3500	2673	808	3360	2565	842	3150	2403	910	3010	2295	944
19.0	27	3450	2661	567	4388	3385	658	4056	3129	781	3640	2808	816	3500	2700	850	3290	2538	910	3150	2430	944
22.0	30	3825	2633	567	4868	3357	658	4499	3101	781	4025	2781	825	3885	2673	859	3500	2592	944	3255	2538	995
24.0	32	4088	2633	576	5199	3357	666	4794	3101	790	4305	2781	825	4130	2673	867	3640	2646	969	3325	2619	1029

HEATING [50Hz, 230V]

INDOOR		OUTDOOR TEMPERATURE (°CDB)																				
	EDB	-15			-10			-7			-5			0			7			10			15		
	°C	TC	SHC	PI	TC	SHC	PI	TC	SHC	PI	TC	SHC	PI	TC	SHC	PI	TC	SHC	PI	TC	SHC	PI	TC	SHC	PI
	16	3689	0	1609	4017	0	1716	4231	0	1766	4375	0	1799	4730	0	1864	4044	0	729	4412	0	749	5092	0	786
	18	3653	0	1592	3983	0	1693	4192	0	1729	4332	0	1753	4680	0	1820	4024	0	766	4396	0	782	5072	0	823
	20	3600	0	1570	3947	0	1670	4155	0	1700	4294	0	1720	4641	0	1790	4000	0	790	4300	0	818	5040	0	861
	22	3551	0	1663	3913	0	1653	4105	0	1668	4232	0	1677	4591	0	1790	3976	0	822	4348	0	848	5016	0	897
	24	3497	0	1527	3877	0	1632	4067	0	1635	4193	0	1637	4552	0	1704	3952	0	853	4324	0	880	4944	0	933

EWB : Evaporator Wet Bulb temperature (°C)
EDB : Evaporator Dry Bulb temperature (°C)
(°CDB) : Outdoor Unit Inlet Air Dry Temperature (°C)

TC : Total Capacity (W)
SHC : Sensible Heating Capacity (W)
PI : Power Input

4.3.10. RAK-18PPA/RAC-18WPA

COOLING [50Hz, 230V]

INDOOR		OUTDOOR TEMPERATURE (°CDB)																				
EWB	EDB	-10			21			27			32			35			40			43		
°C	°C	TC	SHC	PI	TC	SHC	PI	TC	SHC	PI	TC	SHC	PI	TC	SHC	PI	TC	SHC	PI	TC	SHC	PI
12.0	18	2075	1862	409	2115	2235	437	1958	2063	515	1640	1738	506	1580	1662	528	1480	1566	567	1420	1490	589
14.0	20	2075	1862	409	2273	2235	437	2115	2084	521	1760	1738	512	1700	1681	534	1580	1566	572	1520	1509	600
16.0	22	2075	1982	416	2430	2235	443	2250	2084	528	1880	1738	517	1820	1681	545	1700	1566	583	1640	1509	605
18.0	25	2225	2125	422	2588	2428	449	2385	2256	534	2000	1891	523	1920	1815	545	1800	1700	589	1720	1624	611
19.0	27	2300	2197	428	2678	2557	455	2475	2364	540	2080	1986	528	2000	1910	550	1880	1795	589	1800	1719	611
22.0	30	2550	2173	428	2970	2536	455	2745	2342	540	2300	1967	534	2220	1891	556	2000	1834	611	1860	1795	644
24.0	32	2725	2173	435	3173	2536	460	2925	2342	546	2460	1967	534	2360	1891	561	2080	1872	627	1900	1853	666

HEATING [50Hz, 230V]

INDOOR		OUTDOOR TEMPERATURE (°CDB)																				
	EDB	-15			-10			-7			-5			0			7			10			15		
	°C	TC	SHC	PI	TC	SHC	PI	TC	SHC	PI	TC	SHC	PI	TC	SHC	PI	TC	SHC	PI	TC	SHC	PI	TC	SHC	PI
	16	900	0	429	1425	0	441	1625	0	460	1758	0	472	2140	0	528	2528	0	535	2758	0	550	3183	0	577
	18	888	0	435	1413	0	447	1609	0	469	1740	0	484	2118	0	542	2515	0	563	2748	0	574	3170	0	604
	20	875	0	441	1400	0	452	1595	0	477	1725	0	493	2100	0	551	2500	0	580	2688	0	600	3150	0	632
	22	863	0	447	1388	0	458	1575	0	487	1700	0	506	2078	0	564	2485	0	603	2718	0	622	3135	0	658
	24	850	0	452	1375	0	464	1561	0	496	1685	0	518	2060	0	578	2470	0	626	2703	0	646	3090	0	685

4.3.11. RAK-25PPA/RAC-25WPA

COOLING [50Hz, 230V]

INDOOR		OUTDOOR TEMPERATURE (°CDB)																				
EWB	EDB	-10			21			27			32			35			40			43		
°C	°C	TC	SHC	PI	TC	SHC	PI	TC	SHC	PI	TC	SHC	PI	TC	SHC	PI	TC	SHC	PI	TC	SHC	PI
12.0	18	2008	1610	403	2047	1932	431	1894	1783	508	2050	1941	644	1975	1856	672	1850	1749.06	721	1775	1663.74	749
14.0	20	2008	1610	403	2199	1932	431	2047	1802	514	2200	1941	651	2125	1877	679	1975	1749.06	728	1900	1685	763
16.0	22	2008	1713	410	2352	1932	437	2177	1802	520	2350	1941	658	2275	1877	693	2125	1749.06	742	2050	1685	770
18.0	25	2153	1837	416	2504	2099	442	2308	1951	526	2500	2112	665	2400	2026	693	2250	1898	749	2150	1813	777
19.0	27	2226	1899	422	2591	2211	448	2395	2044	532	2600	2218	672	2500	2133	700	2350	2005.02	749	2250	1919.7	777
22.0	30	2468	1878	422	2874	2192	448	2656	2025	532	2875	2197	679	2775	2112	707	2500	2047.68	777	2325	2005.02	819
24.0	32	2637	1878	428	3070	2192	454	2831	2025	538	3075	2197	679	2950	2112	714	2600	2090.34	798	2375	2069	847

HEATING [50Hz, 230V]

INDOOR		OUTDOOR TEMPERATURE (°CDB)																				
	EDB	-15			-10			-7			-5			0			7			10			15		
	°C	TC	SHC	PI	TC	SHC	PI	TC	SHC	PI	TC	SHC	PI	TC	SHC	PI	TC	SHC	PI	TC	SHC	PI	TC	SHC	PI
	16	1224	0	651	1938	0	669	2209	0	697	2390	0	716	2910	0	802	3437	0	812	3750	0	834	4328	0	876
	18	1207	0	660	1921	0	678	2188	0	712	2366	0	735	2880	0	822	3420	0	854	3737	0	871	4311	0	917
	20	1190	0	669	1904	0	686	2169	0	723	2346	0	748	2856	0	836	3400	0	880	3655	0	911	4284	0	959
	22	1173	0	678	1887	0	695	2142	0	738	2312	0	767	2825	0	856	3380	0	915	3696	0	944	4264	0	999
	24	1156	0	686	1870	0	704	2123	0	753	2292	0	786	2802	0	876	3359	0	950	3675	0	980	4202	0	1039

EWB : Evaporator Wet Bulb temperature (°C)
EDB : Evaporator Dry Bulb temperature (°C)
(°CDB) : Outdoor Unit Inlet Air Dry Temperature (°C)

TC : Total Capacity (W)
SHC : Sensible Heating Capacity (W)
PI : Power Input

4.3.12. RAK-35PPA/RAC-35WPA

COOLING [50Hz, 230V]

INDOOR		OUTDOOR TEMPERATURE (°CDB)																				
EWB	EDB	-10			21			27			32			35			40			43		
°C	°C	TC	SHC	PI	TC	SHC	PI	TC	SHC	PI	TC	SHC	PI	TC	SHC	PI	TC	SHC	PI	TC	SHC	PI
12.0	18	2179	1854	487	2056	2060	482	1903	1901	567	2870	2884	1003	2765	2757	1046	2590	2599	1123	2485	2472	1166
14.0	20	2179	1854	487	2209	2060	482	2056	1921	574	3080	2884	1014	2975	2789	1057	2765	2599	1134	2660	2504	1188
16.0	22	2179	1973	494	2363	2060	488	2188	1921	581	3290	2884	1025	3185	2789	1079	2975	2599	1155	2870	2504	1199
18.0	25	2336	2115	502	2516	2238	494	2319	2080	588	3500	3137	1036	3360	3011	1079	3150	2820	1166	3010	2694	1210
19.0	27	2415	2187	509	2603	2357	501	2406	2179	594	3640	3296	1046	3500	3169	1090	3290	2979	1166	3150	2852	1210
22.0	30	2678	2163	509	2888	2337	501	2669	2159	594	4025	3264	1057	3885	3137	1101	3500	3042	1210	3255	2979	1275
24.0	32	2861	2163	517	3084	2337	507	2844	2159	601	4305	3264	1057	4130	3137	1112	3640	3106	1243	3325	3074	1319

HEATING [50Hz, 230V]

INDOOR		OUTDOOR TEMPERATURE (°CDB)																				
	EDB	-15			-10			-7			-5			0			7			10			15		
	°C	TC	SHC	PI	TC	SHC	PI	TC	SHC	PI	TC	SHC	PI	TC	SHC	PI	TC	SHC	PI	TC	SHC	PI	TC	SHC	PI
	16	1512	0	814	2394	0	836	2729	0	872	2953	0	895	3595	0	1002	4246	0	1015	4633	0	1043	5347	0	1095
	18	1491	0	825	2373	0	847	2703	0	890	2923	0	919	3557	0	1027	4225	0	1067	4616	0	1089	5326	0	1146
	20	1470	0	836	2352	0	858	2680	0	904	2898	0	935	3528	0	1045	4200	0	1100	4515	0	1139	5292	0	1199
	22	1449	0	847	2331	0	869	2646	0	923	2856	0	959	3490	0	1070	4175	0	1144	4565	0	1180	5267	0	1249
	24	1428	0	858	2310	0	880	2622	0	941	2831	0	982	3461	0	1096	4150	0	1188	4540	0	1225	5191	0	1299

4.3.13. RAK-50PPA/RAC-50WPA

COOLING [50Hz, 230V]

INDOOR		OUTDOOR TEMPERATURE (°CDB)																				
EWB	EDB	-10			21			27			32			35			40			43		
°C	°C	TC	SHC	PI	TC	SHC	PI	TC	SHC	PI	TC	SHC	PI	TC	SHC	PI	TC	SHC	PI	TC	SHC	PI
12.0	18	2767	1844	619	3133	2459	735	2900	2269	866	4100	3227	1435	3950	3085	1498	3700	2908	1607	3550	2766	1669
14.0	20	2767	1844	619	3367	2459	735	3133	2293	877	4400	3227	1451	4250	3120	1513	3950	2908	1622	3800	2801	1700
16.0	22	2767	1962	629	3600	2459	745	3333	2293	887	4700	3227	1466	4550	3120	1544	4250	2908	1654	4100	2801	1716
18.0	25	2967	2104	638	3833	2671	754	3533	2482	897	5000	3511	1482	4800	3369	1544	4500	3156	1669	4300	3014	1732
19.0	27	3067	2175	648	3967	2813	764	3667	2600	907	5200	3688	1498	5000	3546	1560	4700	3333	1669	4500	3191	1732
22.0	30	3400	2151	648	4400	2790	764	4067	2577	907	5750	3652	1513	5550	3511	1576	5000	3404	1732	4650	3333	1825
24.0	32	3633	2151	658	4700	2790	774	4333	2577	917	6150	3652	1513	5900	3511	1591	5200	3475	1778	4750	3440	1888

HEATING [50Hz, 230V]

INDOOR		OUTDOOR TEMPERATURE (°CDB)																				
	EDB	-15			-10			-7			-5			0			7			10			15		
	°C	TC	SHC	PI	TC	SHC	PI	TC	SHC	PI	TC	SHC	PI	TC	SHC	PI	TC	SHC	PI	TC	SHC	PI	TC	SHC	PI
	16	2160	0	1228	3420	0	1262	3899	0	1315	4218	0	1351	5136	0	1512	6066	0	1532	6618	0	1574	7638	0	1652
	18	2130	0	1245	3390	0	1278	3862	0	1343	4176	0	1386	5082	0	1550	6036	0	1610	6594	0	1643	7608	0	1730
	20	2100	0	1262	3360	0	1295	3828	0	1365	4140	0	1411	5040	0	1577	6000	0	1660	6450	0	1718	7560	0	1809
	22	2070	0	1278	3330	0	1311	3780	0	1393	4080	0	1448	4986	0	1615	5964	0	1726	6522	0	1781	7524	0	1884
	24	2040	0	1295	3300	0	1328	3746	0	1421	4044	0	1482	4944	0	1653	5928	0	1793	6486	0	1849	7416	0	1960

EWB : Evaporator Wet Bulb temperature (°C)
EDB : Evaporator Dry Bulb temperature (°C)
(°CDB) : Outdoor Unit Inlet Air Dry Temperature (°C)

TC : Total Capacity (W)
SHC : Sensible Heating Capacity (W)
PI : Power Input

4.3.14. RAK-60PPA/RAC-60WPA

COOLING [50Hz, 230V]

INDOOR		OUTDOOR TEMPERATURE (°CDB)																				
EWB	EDB	-10			21			27			32			35			40			43		
°C	°C	TC	SHC	PI	TC	SHC	PI	TC	SHC	PI	TC	SHC	PI	TC	SHC	PI	TC	SHC	PI	TC	SHC	PI
12.0	18	4293	2876	934	4861	3835	1109	4499	3540	1307	5002	3958	1702	4819	3784	1776	4514	3566	1906	4331	3392	1980
14.0	20	4293	2876	934	5223	3835	1109	4861	3577	1322	5368	3958	1721	5185	3827	1795	4819	3566	1924	4636	3436	2017
16.0	22	4293	3060	948	5585	3835	1123	5172	3577	1337	5734	3958	1739	5551	3827	1832	5185	3566	1961	5002	3436	2035
18.0	25	4603	3282	963	5948	4167	1138	5482	3872	1353	6100	4306	1758	5856	4132	1832	5490	3871	1980	5246	3697	2054
19.0	27	4758	3392	977	6154	4388	1152	5689	4056	1368	6344	4523	1776	6100	4349	1850	5734	4088	1980	5490	3914	2054
22.0	30	5275	3355	977	6827	4351	1152	6310	4019	1368	7015	4479	1795	6771	4306	1869	6100	4175	2054	5673	4088	2165
24.0	32	5637	3355	992	7292	4351	1167	6723	4019	1383	7503	4479	1795	7198	4306	1887	6344	4262	2109	5795	4219	2239

HEATING [50Hz, 230V]

INDOOR		OUTDOOR TEMPERATURE (°CDB)																				
	EDB	-15			-10			-7			-5			0			7			10			15		
	°C	TC	SHC	PI	TC	SHC	PI	TC	SHC	PI	TC	SHC	PI	TC	SHC	PI	TC	SHC	PI	TC	SHC	PI	TC	SHC	PI
	16	2448	0	1391	3876	0	1429	4419	0	1490	4780	0	1530	5821	0	1713	6875	0	1735	7500	0	1782	8656	0	1871
	18	2414	0	1410	3842	0	1448	4376	0	1521	4733	0	1570	5760	0	1756	6841	0	1824	7473	0	1861	8622	0	1959
	20	2380	0	1429	3808	0	1466	4338	0	1545	4692	0	1598	5712	0	1786	6800	0	1880	7310	0	1946	8568	0	2049
	22	2346	0	1448	3774	0	1485	4284	0	1578	4624	0	1639	5651	0	1829	6759	0	1955	7392	0	2017	8527	0	2134
	24	2312	0	1466	3740	0	1504	4246	0	1609	4583	0	1679	5603	0	1872	6718	0	2030	7351	0	2094	8405	0	2220

4.3.15. RAK-70PPA/RAC-70WPA

COOLING [50Hz, 230V]

INDOOR		OUTDOOR TEMPERATURE (°CDB)																				
EWB	EDB	-10			21			27			32			35			40			43		
°C	°C	TC	SHC	PI	TC	SHC	PI	TC	SHC	PI	TC	SHC	PI	TC	SHC	PI	TC	SHC	PI	TC	SHC	PI
12.0	18	4743	3202	1054	5371	4270	1252	4971	3941	1476	5740	4576	1996	5530	4375	2083	5180	4124	2235	4970	3923	2322
14.0	20	4743	3202	1054	5771	4270	1252	5371	3982	1493	6160	4576	2018	5950	4426	2105	5530	4124	2257	5320	3973	2365
16.0	22	4743	3407	1071	6171	4270	1269	5714	3982	1510	6580	4576	2040	6370	4426	2148	5950	4124	2300	5740	3973	2387
18.0	25	5086	3654	1087	6571	4639	1285	6057	4311	1528	7000	4979	2062	6720	4778	2148	6300	4476	2322	6020	4275	2409
19.0	27	5257	3777	1104	6800	4885	1301	6286	4516	1545	7280	5230	2083	7000	5029	2170	6580	4727	2322	6300	4526	2409
22.0	30	5829	3736	1104	7543	4844	1301	6971	4475	1545	8050	5180	2105	7770	4979	2192	7000	4828	2409	6510	4727	2539
24.0	32	6229	3736	1120	8057	4844	1318	7429	4475	1562	8610	5180	2105	8260	4979	2213	7280	4928	2474	6650	4878	2626

HEATING [50Hz, 230V]

INDOOR		OUTDOOR TEMPERATURE (°CDB)																				
	EDB	-15			-10			-7			-5			0			7			10			15		
	°C	TC	SHC	PI	TC	SHC	PI	TC	SHC	PI	TC	SHC	PI	TC	SHC	PI	TC	SHC	PI	TC	SHC	PI	TC	SHC	PI
	16	2880	0	1628	4560	0	1672	5198	0	1743	5624	0	1791	6848	0	2004	8088	0	2031	8824	0	2086	10184	0	2189
	18	2840	0	1650	4520	0	1694	5149	0	1780	5568	0	1837	6776	0	2055	8048	0	2134	8792	0	2178	10144	0	2292
	20	2800	0	1672	4480	0	1716	5104	0	1808	5520	0	1870	6720	0	2090	8000	0	2200	8600	0	2277	10080	0	2398
	22	2760	0	1694	4440	0	1738	5040	0	1846	5440	0	1918	6648	0	2141	7952	0	2288	8696	0	2361	10032	0	2497
	24	2720	0	1716	4400	0	1760	4995	0	1883	5392	0	1965	6592	0	2191	7904	0	2376	8648	0	2451	9888	0	2598

EWB : Evaporator Wet Bulb temperature (°C)
EDB : Evaporator Dry Bulb temperature (°C)
(°CDB) : Outdoor Unit Inlet Air Dry Temperature (°C)

TC : Total Capacity (W)
SHC : Sensible Heating Capacity (W)
PI : Power Input

4.3.16. RAD-50PPA/RAC-50DPA

COOLING [50Hz, 230V]

INDOOR		OUTDOOR TEMPERATURE (°CDB)																				
EWB	EDB	-10			21			27			32			35			40			43		
°C	°C	TC	SHC	PI	TC	SHC	PI	TC	SHC	PI	TC	SHC	PI	TC	SHC	PI	TC	SHC	PI	TC	SHC	PI
12.0	18	4150	3156	833	4700	4208	990	4350	3884	1166	4100	3682	1288	3950	3520	1344	3700	3318	1442	3550	3156	1498
14.0	20	4150	3156	833	5050	4208	990	4700	3925	1180	4400	3682	1302	4250	3560	1358	3950	3318	1456	3800	3196	1526
16.0	22	4150	3358	846	5400	4208	1003	5000	3925	1194	4700	3682	1316	4550	3560	1386	4250	3318	1484	4100	3196	1540
18.0	25	4450	3601	859	5750	4572	1016	5300	4248	1207	5000	4006	1330	4800	3844	1386	4500	3601	1498	4300	3439	1554
19.0	27	4600	3722	872	5950	4815	1029	5500	4451	1221	5200	4208	1344	5000	4046	1400	4700	3803	1498	4500	3641	1554
22.0	30	5100	3682	872	6600	4774	1029	6100	4410	1221	5750	4167	1358	5550	4006	1414	5000	3884	1554	4650	3803	1638
24.0	32	5450	3682	885	7050	4774	1042	6500	4410	1235	6150	4167	1358	5900	4006	1428	5200	3965	1596	4750	3925	1694

HEATING [50Hz, 230V]

INDOOR		OUTDOOR TEMPERATURE (°CDB)																				
	EDB	-15			-10			-7			-5			0			7			10			15		
	°C	TC	SHC	PI	TC	SHC	PI	TC	SHC	PI	TC	SHC	PI	TC	SHC	PI	TC	SHC	PI	TC	SHC	PI	TC	SHC	PI
	16	2160	0	1177	3420	0	1208	3899	0	1260	4218	0	1294	5136	0	1448	6066	0	1468	6618	0	1507	7638	0	1582
	18	2130	0	1193	3390	0	1224	3862	0	1286	4176	0	1328	5082	0	1485	6036	0	1542	6594	0	1574	7608	0	1657
	20	2100	0	1208	3360	0	1240	3828	0	1307	4140	0	1352	5040	0	1511	6000	0	1590	6450	0	1646	7560	0	1733
	22	2070	0	1224	3330	0	1256	3780	0	1334	4080	0	1386	4986	0	1547	5964	0	1654	6522	0	1706	7524	0	1805
	24	2040	0	1240	3300	0	1272	3746	0	1361	4044	0	1420	4944	0	1584	5928	0	1717	6486	0	1771	7416	0	1878

4.3.17. RAD-60PPA/RAC-60DPA

COOLING [50Hz, 230V]

INDOOR		OUTDOOR TEMPERATURE (°CDB)																				
EWB	EDB	-10			21			27			32			35			40			43		
°C	°C	TC	SHC	PI	TC	SHC	PI	TC	SHC	PI	TC	SHC	PI	TC	SHC	PI	TC	SHC	PI	TC	SHC	PI
12.0	18	4333	3048	968	4907	4065	1150	4541	3752	1355	4920	4088	1720	4740	3908	1795	4440	3684	1926	4260	3504	2001
14.0	20	4333	3048	968	5272	4065	1150	4907	3791	1371	5280	4088	1739	5100	3953	1814	4740	3684	1945	4560	3549	2038
16.0	22	4333	3244	983	5638	4065	1165	5220	3791	1387	5640	4088	1758	5460	3953	1851	5100	3684	1982	4920	3549	2057
18.0	25	4646	3478	999	6003	4416	1180	5533	4104	1403	6000	4447	1777	5760	4268	1851	5400	3998	2001	5160	3818	2076
19.0	27	4802	3596	1014	6212	4651	1195	5742	4299	1419	6240	4672	1795	6000	4492	1870	5640	4223	2001	5400	4043	2076
22.0	30	5324	3557	1014	6890	4612	1195	6368	4260	1419	6900	4627	1814	6660	4447	1889	6000	4313	2076	5580	4223	2188
24.0	32	5690	3557	1029	7360	4612	1210	6786	4260	1435	7380	4627	1814	7080	4447	1907	6240	4402	2132	5700	4358	2263

HEATING [50Hz, 230V]

INDOOR		OUTDOOR TEMPERATURE (°CDB)																				
	EDB	-15			-10			-7			-5			0			7			10			15		
	°C	TC	SHC	PI	TC	SHC	PI	TC	SHC	PI	TC	SHC	PI	TC	SHC	PI	TC	SHC	PI	TC	SHC	PI	TC	SHC	PI
	16	2628	0	1576	4161	0	1619	4744	0	1688	5132	0	1734	6249	0	1940	7380	0	1966	8052	0	2019	9293	0	2119
	18	2592	0	1598	4125	0	1640	4699	0	1723	5081	0	1779	6183	0	1989	7344	0	2066	8023	0	2109	9256	0	2219
	20	2555	0	1619	4088	0	1661	4657	0	1751	5037	0	1811	6132	0	2024	7300	0	2130	7848	0	2205	9198	0	2322
	22	2519	0	1640	4052	0	1683	4599	0	1787	4964	0	1857	6066	0	2072	7256	0	2215	7935	0	2285	9154	0	2418
	24	2482	0	1661	4015	0	1704	4558	0	1823	4920	0	1902	6015	0	2121	7212	0	2300	7891	0	2373	9023	0	2516

EWB : Evaporator Wet Bulb temperature (°C)
EDB : Evaporator Dry Bulb temperature (°C)
(°CDB) : Outdoor Unit Inlet Air Dry Temperature (°C)

TC : Total Capacity (W)
SHC : Sensible Heating Capacity (W)
PI : Power Input

4.3.18. RAD-70PPA/RAC-70DPA

COOLING [50Hz, 230V]

INDOOR		OUTDOOR TEMPERATURE (°CDB)																				
EWB	EDB	-10			21			27			32			35			40			43		
°C	°C	TC	SHC	PI	TC	SHC	PI	TC	SHC	PI	TC	SHC	PI	TC	SHC	PI	TC	SHC	PI	TC	SHC	PI
12.0	18	5893	4007	1506	6674	5342	1788	6177	4931	2107	5822	4674	2328	5609	4469	2429	5254	4212	2606	5041	4007	2707
14.0	20	5893	4007	1506	7171	5342	1788	6674	4983	2132	6248	4674	2353	6035	4520	2454	5609	4212	2631	5396	4058	2758
16.0	22	5893	4263	1529	7668	5342	1812	7100	4983	2157	6674	4674	2378	6461	4520	2505	6035	4212	2682	5822	4058	2783
18.0	25	6319	4572	1553	8165	5804	1835	7526	5393	2182	7100	5085	2404	6816	4880	2505	6390	4572	2707	6106	4366	2808
19.0	27	6532	4726	1576	8449	6113	1859	7810	5650	2207	7384	5342	2429	7100	5137	2530	6674	4828	2707	6390	4623	2808
22.0	30	7242	4674	1576	9372	6061	1859	8662	5599	2207	8165	5291	2454	7881	5085	2555	7100	4931	2808	6603	4828	2960
24.0	32	7739	4674	1600	10011	6061	1882	9230	5599	2231	8733	5291	2454	8378	5085	2581	7384	5034	2884	6745	4983	3061

HEATING [50Hz, 230V]

INDOOR		OUTDOOR TEMPERATURE (°CDB)																				
	EDB	-15			-10			-7			-5			0			7			10			15		
	°C	TC	SHC	PI	TC	SHC	PI	TC	SHC	PI	TC	SHC	PI	TC	SHC	PI	TC	SHC	PI	TC	SHC	PI	TC	SHC	PI
	16	2880	0	1732	4560	0	1778	5198	0	1854	5624	0	1905	6848	0	2132	8088	0	2160	8824	0	2218	10184	0	2328
	18	2840	0	1755	4520	0	1802	5149	0	1893	5568	0	1954	6776	0	2186	8048	0	2270	8792	0	2317	10144	0	2438
	20	2800	0	1778	4480	0	1825	5104	0	1923	5520	0	1989	6720	0	2223	8000	0	2340	8600	0	2422	10080	0	2551
	22	2760	0	1802	4440	0	1849	5040	0	1964	5440	0	2040	6648	0	2277	7952	0	2434	8696	0	2511	10032	0	2656
	24	2720	0	1825	4400	0	1872	4995	0	2003	5392	0	2090	6592	0	2331	7904	0	2527	8648	0	2607	9888	0	2764

4.3.19. RAK-18PEA/RAC-18WEA

COOLING [50Hz, 230V]

INDOOR		OUTDOOR TEMPERATURE (°CDB)																				
EWB	EDB	-10			21			27			32			35			40			43		
°C	°C	TC	SHC	PI	TC	SHC	PI	TC	SHC	PI	TC	SHC	PI	TC	SHC	PI	TC	SHC	PI	TC	SHC	PI
12.0	18	2075	1862	432	2115	2235	461	1958	2063	544	1640	1738	534	1580	1662	557	1480	1566	597	1420	1490	621
14.0	20	2075	1862	432	2273	2235	461	2115	2084	550	1760	1738	539	1700	1681	563	1580	1566	603	1520	1509	632
16.0	22	2075	1982	438	2430	2235	467	2250	2084	556	1880	1738	545	1820	1681	574	1700	1566	615	1640	1509	638
18.0	25	2225	2125	445	2588	2428	473	2385	2256	563	2000	1891	551	1920	1815	574	1800	1700	621	1720	1624	644
19.0	27	2300	2197	452	2678	2557	479	2475	2364	569	2080	1986	557	2000	1910	580	1880	1795	621	1800	1719	644
22.0	30	2550	2173	452	2970	2536	479	2745	2342	569	2300	1967	563	2220	1891	586	2000	1834	644	1860	1795	679
24.0	32	2725	2173	458	3173	2536	485	2925	2342	576	2460	1967	563	2360	1891	592	2080	1872	661	1900	1853	702

HEATING [50Hz, 230V]

INDOOR		OUTDOOR TEMPERATURE (°CDB)																				
	EDB	-15			-10			-7			-5			0			7			10			15		
	°C	TC	SHC	PI	TC	SHC	PI	TC	SHC	PI	TC	SHC	PI	TC	SHC	PI	TC	SHC	PI	TC	SHC	PI	TC	SHC	PI
	16	900	0	459	1425	0	471	1625	0	491	1758	0	505	2140	0	565	2528	0	572	2758	0	588	3183	0	617
	18	888	0	465	1413	0	477	1609	0	502	1740	0	518	2118	0	579	2515	0	601	2748	0	614	3170	0	646
	20	875	0	471	1400	0	484	1595	0	510	1725	0	527	2100	0	589	2500	0	620	2688	0	642	3150	0	676
	22	863	0	477	1388	0	490	1575	0	520	1700	0	541	2078	0	603	2485	0	645	2718	0	665	3135	0	704
	24	850	0	484	1375	0	496	1561	0	531	1685	0	554	2060	0	618	2470	0	670	2703	0	691	3090	0	732

EWB : Evaporator Wet Bulb temperature (°C)
EDB : Evaporator Dry Bulb temperature (°C)
(°CDB) : Outdoor Unit Inlet Air Dry Temperature (°C)

TC : Total Capacity (W)
SHC : Sensible Heating Capacity (W)
PI : Power Input

4.3.20. RAK-25PEA/RAC-25WEA

COOLING [50Hz, 230V]

INDOOR		OUTDOOR TEMPERATURE (°CDB)																				
EWB	EDB	-10			21			27			32			35			40			43		
°C	°C	TC	SHC	PI	TC	SHC	PI	TC	SHC	PI	TC	SHC	PI	TC	SHC	PI	TC	SHC	PI	TC	SHC	PI
12.0	18	2008	1610	403	2047	1932	431	1894	1783	508	2050	1941	644	1975	1856	672	1850	1749	721	1775	1664	749
14.0	20	2008	1610	403	2199	1932	431	2047	1802	514	2200	1941	651	2125	1877	679	1975	1749	728	1900	1685	763
16.0	22	2008	1713	410	2352	1932	437	2177	1802	520	2350	1941	658	2275	1877	693	2125	1749	742	2050	1685	770
18.0	25	2153	1837	416	2504	2099	442	2308	1951	526	2500	2112	665	2400	2026	693	2250	1898	749	2150	1813	777
19.0	27	2226	1899	422	2591	2211	448	2395	2044	532	2600	2218	672	2500	2133	700	2350	2005	749	2250	1920	777
22.0	30	2468	1878	422	2874	2192	448	2656	2025	532	2875	2197	679	2775	2112	707	2500	2048	777	2325	2005	819
24.0	32	2637	1878	428	3070	2192	454	2831	2025	538	3075	2197	679	2950	2112	714	2600	2090	798	2375	2069	847

HEATING [50Hz, 230V]

INDOOR		OUTDOOR TEMPERATURE (°CDB)																					
	EDB	-15			-10			-7			-5			0			7			10			15		
	°C	TC	SHC	PI	TC	SHC	PI	TC	SHC	PI	TC	SHC	PI	TC	SHC	PI	TC	SHC	PI	TC	SHC	PI	TC	SHC	PI
	16	1224	0	651	1938	0	669	2209	0	697	2390	0	716	2910	0	802	3437	0	812	3750	0	834	4328	0	876
	18	1207	0	660	1921	0	678	2188	0	712	2366	0	735	2880	0	822	3420	0	854	3737	0	871	4311	0	917
	20	1190	0	669	1904	0	686	2169	0	723	2346	0	748	2856	0	836	3400	0	880	3655	0	911	4284	0	959
	22	1173	0	678	1887	0	695	2142	0	738	2312	0	767	2825	0	856	3380	0	915	3696	0	944	4264	0	999
	24	1156	0	686	1870	0	704	2123	0	753	2292	0	786	2802	0	876	3359	0	950	3675	0	980	4202	0	1039

4.3.21. RAK-35PEA/RAC-35WEA

COOLING [50Hz, 230V]

INDOOR		OUTDOOR TEMPERATURE (°CDB)																				
EWB	EDB	-10			21			27			32			35			40			43		
°C	°C	TC	SHC	PI	TC	SHC	PI	TC	SHC	PI	TC	SHC	PI	TC	SHC	PI	TC	SHC	PI	TC	SHC	PI
12.0	18	2179	1854	487	2056	2060	482	1903	1901	567	2870	2884	1003	2765	2757	1046	2590	2599	1123	2485	2472	1166
14.0	20	2179	1854	487	2209	2060	482	2056	1921	574	3080	2884	1014	2975	2789	1057	2765	2599	1134	2660	2504	1188
16.0	22	2179	1973	494	2363	2060	488	2188	1921	581	3290	2884	1025	3185	2789	1079	2975	2599	1155	2870	2504	1199
18.0	25	2336	2115	502	2516	2238	494	2319	2080	588	3500	3137	1036	3360	3011	1079	3150	2820	1166	3010	2694	1210
19.0	27	2415	2187	509	2603	2357	501	2406	2179	594	3640	3296	1046	3500	3169	1090	3290	2979	1166	3150	2852	1210
22.0	30	2678	2163	509	2888	2337	501	2669	2159	594	4025	3264	1057	3885	3137	1101	3500	3042	1210	3255	2979	1275
24.0	32	2861	2163	517	3084	2337	507	2844	2159	601	4305	3264	1057	4130	3137	1112	3640	3106	1243	3325	3074	1319

HEATING [50Hz, 230V]

INDOOR		OUTDOOR TEMPERATURE (°CDB)																					
	EDB	-15			-10			-7			-5			0			7			10			15		
	°C	TC	SHC	PI	TC	SHC	PI	TC	SHC	PI	TC	SHC	PI	TC	SHC	PI	TC	SHC	PI	TC	SHC	PI	TC	SHC	PI
	16	1512	0	814	2394	0	836	2729	0	872	2953	0	895	3595	0	1002	4246	0	1015	4633	0	1043	5347	0	1095
	18	1491	0	825	2373	0	847	2703	0	890	2923	0	919	3557	0	1027	4225	0	1067	4616	0	1089	5326	0	1146
	20	1470	0	836	2352	0	858	2680	0	904	2898	0	935	3528	0	1045	4200	0	1100	4515	0	1139	5292	0	1199
	22	1449	0	847	2331	0	869	2646	0	923	2856	0	959	3490	0	1070	4175	0	1144	4565	0	1180	5267	0	1249
	24	1428	0	858	2310	0	880	2622	0	941	2831	0	982	3461	0	1096	4150	0	1188	4540	0	1225	5191	0	1299

EWB : Evaporator Wet Bulb temperature (°C)
EDB : Evaporator Dry Bulb temperature (°C)
(°CDB) : Outdoor Unit Inlet Air Dry Temperature (°C)

TC : Total Capacity (W)
SHC : Sensible Heating Capacity (W)
PI : Power Input

4.3.22. RAK-50PEA/RAC-50WEA

COOLING [50Hz, 230V]

INDOOR		OUTDOOR TEMPERATURE (°CDB)																				
EWB	EDB	-10			21			27			32			35			40			43		
°C	°C	TC	SHC	PI	TC	SHC	PI	TC	SHC	PI	TC	SHC	PI	TC	SHC	PI	TC	SHC	PI	TC	SHC	PI
12.0	18	2785	1803	623	3680	2805	863	3406	2590	1017	4100	3135	1435	3950	2997	1498	3700	2824	1607	3550	2687	1669
14.0	20	2785	1803	623	3954	2805	863	3680	2617	1029	4400	3135	1451	4250	3032	1513	3950	2824	1622	3800	2722	1700
16.0	22	2785	1919	633	4228	2805	875	3915	2617	1041	4700	3135	1466	4550	3032	1544	4250	2824	1654	4100	2722	1716
18.0	25	2987	2058	643	4502	3048	886	4150	2832	1053	5000	3411	1482	4800	3273	1544	4500	3066	1669	4300	2928	1732
19.0	27	3087	2127	652	4659	3210	897	4306	2967	1065	5200	3583	1498	5000	3445	1560	4700	3233	1669	4500	3100	1732
22.0	30	3423	2104	652	5168	3183	897	4776	2940	1065	5750	3548	1513	5550	3411	1576	5000	3307	1732	4650	3238	1825
24.0	32	3658	2104	662	5520	3183	909	5089	2940	1077	6150	3548	1513	5900	3411	1591	5200	3376	1778	4750	3342	1888

HEATING [50Hz, 230V]

INDOOR		OUTDOOR TEMPERATURE (°CDB)																				
	EDB	-15			-10			-7			-5			0			7			10			15		
	°C	TC	SHC	PI	TC	SHC	PI	TC	SHC	PI	TC	SHC	PI	TC	SHC	PI	TC	SHC	PI	TC	SHC	PI	TC	SHC	PI
	16	2160	0	1228	3420	0	1262	3899	0	1315	4218	0	1351	5136	0	1512	6066	0	1532	6618	0	1574	7638	0	1652
	18	2130	0	1245	3390	0	1278	3862	0	1343	4176	0	1386	5082	0	1550	6036	0	1610	6594	0	1643	7608	0	1730
	20	2100	0	1262	3360	0	1295	3828	0	1365	4140	0	1411	5040	0	1577	6000	0	1660	6450	0	1718	7560	0	1809
	22	2070	0	1278	3330	0	1311	3780	0	1393	4080	0	1448	4986	0	1615	5964	0	1726	6522	0	1781	7524	0	1884
	24	2040	0	1295	3300	0	1328	3746	0	1421	4044	0	1482	4944	0	1653	5928	0	1793	6486	0	1849	7416	0	1960

4.3.23. RAK-18PSAN/RAC-18WSAN

COOLING [50Hz, 230V]

INDOOR		OUTDOOR TEMPERATURE (°CDB)																				
EWB	EDB	-10			21			27			32			35			40			43		
°C	°C	TC	SHC	PI	TC	SHC	PI	TC	SHC	PI	TC	SHC	PI	TC	SHC	PI	TC	SHC	PI	TC	SHC	PI
12.0	18	TBA	TBA	TBA	TBA	TBA	TBA	TBA	TBA	TBA	TBA	TBA	TBA	TBA	TBA	TBA	TBA	TBA	TBA	TBA	TBA	TBA
14.0	20	TBA	TBA	TBA	TBA	TBA	TBA	TBA	TBA	TBA	TBA	TBA	TBA	TBA	TBA	TBA	TBA	TBA	TBA	TBA	TBA	TBA
16.0	22	TBA	TBA	TBA	TBA	TBA	TBA	TBA	TBA	TBA	TBA	TBA	TBA	TBA	TBA	TBA	TBA	TBA	TBA	TBA	TBA	TBA
18.0	25	TBA	TBA	TBA	TBA	TBA	TBA	TBA	TBA	TBA	TBA	TBA	TBA	TBA	TBA	TBA	TBA	TBA	TBA	TBA	TBA	TBA
19.0	27	TBA	TBA	TBA	TBA	TBA	TBA	TBA	TBA	TBA	TBA	TBA	TBA	TBA	TBA	TBA	TBA	TBA	TBA	TBA	TBA	TBA
22.0	30	TBA	TBA	TBA	TBA	TBA	TBA	TBA	TBA	TBA	TBA	TBA	TBA	TBA	TBA	TBA	TBA	TBA	TBA	TBA	TBA	TBA
24.0	32	TBA	TBA	TBA	TBA	TBA	TBA	TBA	TBA	TBA	TBA	TBA	TBA	TBA	TBA	TBA	TBA	TBA	TBA	TBA	TBA	TBA

HEATING [50Hz, 230V]

INDOOR		OUTDOOR TEMPERATURE (°CDB)																				
	EDB	-15			-10			-7			-5			0			7			10			15		
	°C	TC	SHC	PI	TC	SHC	PI	TC	SHC	PI	TC	SHC	PI	TC	SHC	PI	TC	SHC	PI	TC	SHC	PI	TC	SHC	PI
	16	TBA	TBA	TBA	TBA	TBA	TBA	TBA	TBA	TBA	TBA	TBA	TBA	TBA	TBA	TBA	TBA	TBA	TBA	TBA	TBA	TBA	TBA	TBA	TBA
	18	TBA	TBA	TBA	TBA	TBA	TBA	TBA	TBA	TBA	TBA	TBA	TBA	TBA	TBA	TBA	TBA	TBA	TBA	TBA	TBA	TBA	TBA	TBA	TBA
	20	TBA	TBA	TBA	TBA	TBA	TBA	TBA	TBA	TBA	TBA	TBA	TBA	TBA	TBA	TBA	TBA	TBA	TBA	TBA	TBA	TBA	TBA	TBA	TBA
	22	TBA	TBA	TBA	TBA	TBA	TBA	TBA	TBA	TBA	TBA	TBA	TBA	TBA	TBA	TBA	TBA	TBA	TBA	TBA	TBA	TBA	TBA	TBA	TBA
	24	TBA	TBA	TBA	TBA	TBA	TBA	TBA	TBA	TBA	TBA	TBA	TBA	TBA	TBA	TBA	TBA	TBA	TBA	TBA	TBA	TBA	TBA	TBA	TBA

4.3.24. RAK-25PSAN/RAC-25WSAN

COOLING [50Hz, 230V]

INDOOR		OUTDOOR TEMPERATURE (°CDB)																				
EWB	EDB	-10			21			27			32			35			40			43		
°C	°C	TC	SHC	PI	TC	SHC	PI	TC	SHC	PI	TC	SHC	PI	TC	SHC	PI	TC	SHC	PI	TC	SHC	PI
12.0	18	TBA	TBA	TBA	TBA	TBA	TBA	TBA	TBA	TBA	TBA	TBA	TBA	TBA	TBA	TBA	TBA	TBA	TBA	TBA	TBA	TBA
14.0	20	TBA	TBA	TBA	TBA	TBA	TBA	TBA	TBA	TBA	TBA	TBA	TBA	TBA	TBA	TBA	TBA	TBA	TBA	TBA	TBA	TBA
16.0	22	TBA	TBA	TBA	TBA	TBA	TBA	TBA	TBA	TBA	TBA	TBA	TBA	TBA	TBA	TBA	TBA	TBA	TBA	TBA	TBA	TBA
18.0	25	TBA	TBA	TBA	TBA	TBA	TBA	TBA	TBA	TBA	TBA	TBA	TBA	TBA	TBA	TBA	TBA	TBA	TBA	TBA	TBA	TBA
19.0	27	TBA	TBA	TBA	TBA	TBA	TBA	TBA	TBA	TBA	TBA	TBA	TBA	TBA	TBA	TBA	TBA	TBA	TBA	TBA	TBA	TBA
22.0	30	TBA	TBA	TBA	TBA	TBA	TBA	TBA	TBA	TBA	TBA	TBA	TBA	TBA	TBA	TBA	TBA	TBA	TBA	TBA	TBA	TBA
24.0	32	TBA	TBA	TBA	TBA	TBA	TBA	TBA	TBA	TBA	TBA	TBA	TBA	TBA	TBA	TBA	TBA	TBA	TBA	TBA	TBA	TBA

HEATING [50Hz, 230V]

INDOOR		OUTDOOR TEMPERATURE (°CDB)																				
	EDB	-15			-10			-7			-5			0			7			10			15		
	°C	TC	SHC	PI	TC	SHC	PI	TC	SHC	PI	TC	SHC	PI	TC	SHC	PI	TC	SHC	PI	TC	SHC	PI	TC	SHC	PI
	16	TBA	TBA	TBA	TBA	TBA	TBA	TBA	TBA	TBA	TBA	TBA	TBA	TBA	TBA	TBA	TBA	TBA	TBA	TBA	TBA	TBA	TBA	TBA	TBA
	18	TBA	TBA	TBA	TBA	TBA	TBA	TBA	TBA	TBA	TBA	TBA	TBA	TBA	TBA	TBA	TBA	TBA	TBA	TBA	TBA	TBA	TBA	TBA	TBA
	20	TBA	TBA	TBA	TBA	TBA	TBA	TBA	TBA	TBA	TBA	TBA	TBA	TBA	TBA	TBA	TBA	TBA	TBA	TBA	TBA	TBA	TBA	TBA	TBA
	22	TBA	TBA	TBA	TBA	TBA	TBA	TBA	TBA	TBA	TBA	TBA	TBA	TBA	TBA	TBA	TBA	TBA	TBA	TBA	TBA	TBA	TBA	TBA	TBA
	24	TBA	TBA	TBA	TBA	TBA	TBA	TBA	TBA	TBA	TBA	TBA	TBA	TBA	TBA	TBA	TBA	TBA	TBA	TBA	TBA	TBA	TBA	TBA	TBA

4.3.25. RAK-35PSAN/RAC-35WSAN

COOLING [50Hz, 230V]

INDOOR		OUTDOOR TEMPERATURE (°CDB)																				
EWB	EDB	-10			21			27			32			35			40			43		
°C	°C	TC	SHC	PI	TC	SHC	PI	TC	SHC	PI	TC	SHC	PI	TC	SHC	PI	TC	SHC	PI	TC	SHC	PI
12.0	18	TBA	TBA	TBA	TBA	TBA	TBA	TBA	TBA	TBA	TBA	TBA	TBA	TBA	TBA	TBA	TBA	TBA	TBA	TBA	TBA	TBA
14.0	20	TBA	TBA	TBA	TBA	TBA	TBA	TBA	TBA	TBA	TBA	TBA	TBA	TBA	TBA	TBA	TBA	TBA	TBA	TBA	TBA	TBA
16.0	22	TBA	TBA	TBA	TBA	TBA	TBA	TBA	TBA	TBA	TBA	TBA	TBA	TBA	TBA	TBA	TBA	TBA	TBA	TBA	TBA	TBA
18.0	25	TBA	TBA	TBA	TBA	TBA	TBA	TBA	TBA	TBA	TBA	TBA	TBA	TBA	TBA	TBA	TBA	TBA	TBA	TBA	TBA	TBA
19.0	27	TBA	TBA	TBA	TBA	TBA	TBA	TBA	TBA	TBA	TBA	TBA	TBA	TBA	TBA	TBA	TBA	TBA	TBA	TBA	TBA	TBA
22.0	30	TBA	TBA	TBA	TBA	TBA	TBA	TBA	TBA	TBA	TBA	TBA	TBA	TBA	TBA	TBA	TBA	TBA	TBA	TBA	TBA	TBA
24.0	32	TBA	TBA	TBA	TBA	TBA	TBA	TBA	TBA	TBA	TBA	TBA	TBA	TBA	TBA	TBA	TBA	TBA	TBA	TBA	TBA	TBA

HEATING [50Hz, 230V]

INDOOR		OUTDOOR TEMPERATURE (°CDB)																				
	EDB	-15			-10			-7			-5			0			7			10			15		
	°C	TC	SHC	PI	TC	SHC	PI	TC	SHC	PI	TC	SHC	PI	TC	SHC	PI	TC	SHC	PI	TC	SHC	PI	TC	SHC	PI
	16	TBA	TBA	TBA	TBA	TBA	TBA	TBA	TBA	TBA	TBA	TBA	TBA	TBA	TBA	TBA	TBA	TBA	TBA	TBA	TBA	TBA	TBA	TBA	TBA
	18	TBA	TBA	TBA	TBA	TBA	TBA	TBA	TBA	TBA	TBA	TBA	TBA	TBA	TBA	TBA	TBA	TBA	TBA	TBA	TBA	TBA	TBA	TBA	TBA
	20	TBA	TBA	TBA	TBA	TBA	TBA	TBA	TBA	TBA	TBA	TBA	TBA	TBA	TBA	TBA	TBA	TBA	TBA	TBA	TBA	TBA	TBA	TBA	TBA
	22	TBA	TBA	TBA	TBA	TBA	TBA	TBA	TBA	TBA	TBA	TBA	TBA	TBA	TBA	TBA	TBA	TBA	TBA	TBA	TBA	TBA	TBA	TBA	TBA
	24	TBA	TBA	TBA	TBA	TBA	TBA	TBA	TBA	TBA	TBA	TBA	TBA	TBA	TBA	TBA	TBA	TBA	TBA	TBA	TBA	TBA	TBA	TBA	TBA

EWB : Evaporator Wet Bulb temperature (°C)
EDB : Evaporator Dry Bulb temperature (°C)
(°CDB) : Outdoor Unit Inlet Air Dry Temperature (°C)

TC : Total Capacity (W)
SHC : Sensible Heating Capacity (W)
PI : Power Input

4.3.26. RAK-18PSPA/RAC-18WSPA

COOLING [50Hz, 230V]

INDOOR		OUTDOOR TEMPERATURE (°CDB)																				
EWB	EDB	-10			21			27			32			35			40			43		
°C	°C	TC	SHC	PI	TC	SHC	PI	TC	SHC	PI	TC	SHC	PI	TC	SHC	PI	TC	SHC	PI	TC	SHC	PI
12.0	18	3451	3173	412	1692	1831	212	1566	1691	250	1476	1603	276	1422	1532	288	1332	1444	309	1278	1373	321
14.0	20	3451	3173	412	1818	1831	212	1692	1708	253	1584	1603	279	1530	1550	291	1422	1444	312	1368	1391	327
16.0	22	3451	3376	419	1944	1831	215	1800	1708	256	1692	1603	282	1638	1550	297	1530	1444	318	1476	1391	330
18.0	25	3700	3620	425	2070	1990	218	1908	1849	259	1800	1743	285	1728	1673	297	1620	1567	321	1548	1497	333
19.0	27	3825	3742	432	2142	2096	220	1980	1937	262	1872	1831	288	1800	1761	300	1692	1655	321	1620	1584	333
22.0	30	4241	3701	432	2376	2078	220	2196	1919	262	2070	1814	291	1998	1743	303	1800	1690	333	1674	1655	351
24.0	32	4532	3701	438	2538	2078	223	2340	1919	265	2214	1814	291	2124	1743	306	1872	1725	342	1710	1708	363

HEATING [50Hz, 230V]

INDOOR		OUTDOOR TEMPERATURE (°CDB)																				
	EDB	-15			-10			-7			-5			0			7			10			15		
	°C	TC	SHC	PI	TC	SHC	PI	TC	SHC	PI	TC	SHC	PI	TC	SHC	PI	TC	SHC	PI	TC	SHC	PI	TC	SHC	PI
	16	828	0	278	1311	0	285	1495	0	297	1617	0	305	1969	0	342	2325	0	346	2537	0	356	2928	0	373
	18	817	0	281	1300	0	289	1480	0	303	1601	0	313	1948	0	350	2314	0	364	2528	0	371	2916	0	391
	20	805	0	285	1288	0	293	1467	0	308	1587	0	319	1932	0	356	2300	0	375	2473	0	388	2898	0	409
	22	794	0	289	1277	0	296	1449	0	315	1564	0	327	1911	0	365	2286	0	390	2500	0	402	2884	0	426
	24	782	0	293	1265	0	300	1436	0	321	1550	0	335	1895	0	374	2272	0	405	2486	0	418	2843	0	443

4.3.27. RAK-25PSPA/RAC-25WSPA

COOLING [50Hz, 230V]

INDOOR		OUTDOOR TEMPERATURE (°CDB)																				
EWB	EDB	-10			21			27			32			35			40			43		
°C	°C	TC	SHC	PI	TC	SHC	PI	TC	SHC	PI	TC	SHC	PI	TC	SHC	PI	TC	SHC	PI	TC	SHC	PI
12.0	18	3497	3072	492	3565	3687	525	3299	3403	619	2050	2127	451	1975	2033	470	1850	1916	505	1775	1822	524
14.0	20	3497	3072	492	3830	3687	525	3565	3439	626	2200	2127	456	2125	2057	475	1975	1916	510	1900	1846	534
16.0	22	3497	3269	499	4096	3687	532	3792	3439	634	2350	2127	461	2275	2057	485	2125	1916	519	2050	1846	539
18.0	25	3750	3506	507	4361	4006	539	4020	3722	641	2500	2314	466	2400	2220	485	2250	2080	524	2150	1986	544
19.0	27	3876	3624	515	4513	4218	546	4171	3899	648	2600	2430	470	2500	2337	490	2350	2196	524	2250	2103	544
22.0	30	4298	3584	515	5006	4183	546	4626	3864	648	2875	2407	475	2775	2314	495	2500	2243	544	2325	2196	573
24.0	32	4593	3584	522	5347	4183	553	4930	3864	656	3075	2407	475	2950	2314	500	2600	2290	559	2375	2267	593

HEATING [50Hz, 230V]

INDOOR		OUTDOOR TEMPERATURE (°CDB)																				
	EDB	-15			-10			-7			-5			0			7			10			15		
	°C	TC	SHC	PI	TC	SHC	PI	TC	SHC	PI	TC	SHC	PI	TC	SHC	PI	TC	SHC	PI	TC	SHC	PI	TC	SHC	PI
	16	1152	0	433	1824	0	445	2079	0	464	2250	0	476	2739	0	533	3235	0	540	3530	0	555	4074	0	582
	18	1136	0	439	1808	0	450	2060	0	473	2227	0	488	2710	0	546	3219	0	567	3517	0	579	4058	0	610
	20	1120	0	445	1792	0	456	2042	0	481	2208	0	497	2688	0	556	3200	0	585	3440	0	605	4032	0	638
	22	1104	0	450	1776	0	462	2016	0	491	2176	0	510	2659	0	569	3181	0	608	3478	0	628	4013	0	664
	24	1088	0	456	1760	0	468	1998	0	501	2157	0	522	2637	0	583	3162	0	632	3459	0	652	3955	0	691

EWB : Evaporator Wet Bulb temperature (°C)
EDB : Evaporator Dry Bulb temperature (°C)
(°CDB) : Outdoor Unit Inlet Air Dry Temperature (°C)

TC : Total Capacity (W)
SHC : Sensible Heating Capacity (W)
PI : Power Input

4.3.28. RAK-35PSPA/RAC-35WSPA

COOLING [50Hz, 230V]

INDOOR		OUTDOOR TEMPERATURE (°CDB)																				
EWB	EDB	-10			21			27			32			35			40			43		
°C	°C	TC	SHC	PI	TC	SHC	PI	TC	SHC	PI	TC	SHC	PI	TC	SHC	PI	TC	SHC	PI	TC	SHC	PI
12.0	18	2954	2131	511	3011	2558	547	2787	2361	644	2870	2445	777	2765	2338	811	2590	2203	870	2485	2095	904
14.0	20	2954	2131	511	3235	2558	547	3011	2386	652	3080	2445	786	2975	2365	820	2765	2203	879	2660	2123	921
16.0	22	2954	2268	519	3460	2558	554	3203	2386	659	3290	2445	794	3185	2365	837	2975	2203	896	2870	2123	930
18.0	25	3168	2432	527	3684	2779	561	3396	2582	667	3500	2660	803	3360	2553	837	3150	2391	904	3010	2284	938
19.0	27	3275	2514	535	3812	2927	568	3524	2705	675	3640	2794	811	3500	2687	845	3290	2525	904	3150	2418	938
22.0	30	3631	2487	535	4228	2902	568	3908	2681	675	4025	2768	820	3885	2660	853	3500	2579	938	3255	2525	989
24.0	32	3880	2487	543	4517	2902	575	4164	2681	682	4305	2768	820	4130	2660	862	3640	2633	963	3325	2606	1022

HEATING [50Hz, 230V]

INDOOR		OUTDOOR TEMPERATURE (°CDB)																				
	EDB	-15			-10			-7			-5			0			7			10			15		
	°C	TC	SHC	PI	TC	SHC	PI	TC	SHC	PI	TC	SHC	PI	TC	SHC	PI	TC	SHC	PI	TC	SHC	PI	TC	SHC	PI
	16	1440	0	614	2280	0	631	2599	0	658	2812	0	676	3424	0	756	4044	0	766	4412	0	787	5092	0	826
	18	1420	0	623	2260	0	639	2574	0	671	2784	0	693	3388	0	775	4024	0	805	4396	0	822	5072	0	865
	20	1400	0	631	2240	0	647	2552	0	682	2760	0	706	3360	0	789	4000	0	830	4300	0	859	5040	0	905
	22	1380	0	639	2220	0	656	2520	0	697	2720	0	724	3324	0	808	3976	0	863	4348	0	891	5016	0	942
	24	1360	0	647	2200	0	664	2498	0	710	2696	0	741	3296	0	827	3952	0	896	4324	0	925	4944	0	980

4.3.29. RAF-25PXA/RAC-25FXA

COOLING [50Hz, 230V]

INDOOR		OUTDOOR TEMPERATURE (°CDB)																				
EWB	EDB	-10			21			27			32			35			40			43		
°C	°C	TC	SHC	PI	TC	SHC	PI	TC	SHC	PI	TC	SHC	PI	TC	SHC	PI	TC	SHC	PI	TC	SHC	PI
12.0	18	2594	2403	432	2350	2564	410	2175	2366	483	2050	2243	534	1975	2145	557	1850	2021	597	1775	1922	621
14.0	20	2594	2403	432	2525	2564	410	2350	2391	489	2200	2243	539	2125	2169	563	1975	2021	603	1900	1947	632
16.0	22	2594	2557	438	2700	2564	415	2500	2391	495	2350	2243	545	2275	2169	574	2125	2021	615	2050	1947	638
18.0	25	2781	2742	445	2875	2785	421	2650	2588	500	2500	2440	551	2400	2342	574	2250	2194	621	2150	2095	644
19.0	27	2875	2835	452	2975	2933	426	2750	2712	506	2600	2564	557	2500	2465	580	2350	2317	621	2250	2218	644
22.0	30	3188	2804	452	3300	2909	426	3050	2687	506	2875	2539	563	2775	2440	586	2500	2366	644	2325	2317	679
24.0	32	3406	2804	458	3525	2909	432	3250	2687	512	3075	2539	563	2950	2440	592	2600	2415	661	2375	2391	702

HEATING [50Hz, 230V]

INDOOR		OUTDOOR TEMPERATURE (°CDB)																				
	EDB	-15			-10			-7			-5			0			7			10			15		
	°C	TC	SHC	PI	TC	SHC	PI	TC	SHC	PI	TC	SHC	PI	TC	SHC	PI	TC	SHC	PI	TC	SHC	PI	TC	SHC	PI
	16	1224	0	585	1938	0	600	2209	0	626	2390	0	643	2910	0	720	3437	0	729	3750	0	749	4328	0	786
	18	1207	0	593	1921	0	608	2188	0	639	2366	0	660	2880	0	738	3420	0	766	3737	0	782	4311	0	823
	20	1190	0	600	1904	0	616	2169	0	649	2346	0	672	2856	0	751	3400	0	790	3655	0	818	4284	0	861
	22	1173	0	608	1887	0	624	2142	0	663	2312	0	689	2825	0	769	3380	0	822	3696	0	848	4264	0	897
	24	1156	0	616	1870	0	632	2123	0	676	2292	0	705	2802	0	787	3359	0	853	3675	0	880	4202	0	933

EWB : Evaporator Wet Bulb temperature (°C)
EDB : Evaporator Dry Bulb temperature (°C)
(°CDB) : Outdoor Unit Inlet Air Dry Temperature (°C)

TC : Total Capacity (W)
SHC : Sensible Heating Capacity (W)
PI : Power Input

4.3.30. RAF-35PXA/RAC-35FXA

COOLING [50Hz, 230V]

INDOOR		OUTDOOR TEMPERATURE (°CDB)																				
EWB	EDB	-10			21			27			32			35			40			43		
°C	°C	TC	SHC	PI	TC	SHC	PI	TC	SHC	PI	TC	SHC	PI	TC	SHC	PI	TC	SHC	PI	TC	SHC	PI
12.0	18	2990	2371	625	3290	3071	721	3045	2835	850	2870	2687	938	2765	2569	979	2590	2421	1051	2485	2303	1091
14.0	20	2990	2371	625	3535	3071	721	3290	2864	860	3080	2687	949	2975	2599	989	2765	2421	1061	2660	2333	1112
16.0	22	2990	2523	635	3780	3071	730	3500	2864	870	3290	2687	959	3185	2599	1010	2975	2421	1081	2870	2333	1122
18.0	25	3207	2705	644	4025	3337	740	3710	3101	880	3500	2923	969	3360	2805	1010	3150	2628	1091	3010	2510	1132
19.0	27	3315	2797	654	4165	3514	749	3850	3248	890	3640	3071	979	3500	2953	1020	3290	2775	1091	3150	2657	1132
22.0	30	3675	2766	654	4620	3485	749	4270	3219	890	4025	3042	989	3885	2923	1030	3500	2834	1132	3255	2775	1193
24.0	32	3927	2766	664	4935	3485	759	4550	3219	900	4305	3042	989	4130	2923	1040	3640	2893	1163	3325	2864	1234

HEATING [50Hz, 230V]

INDOOR		OUTDOOR TEMPERATURE (°CDB)																				
	EDB	-15			-10			-7			-5			0			7			10			15		
	°C	TC	SHC	PI	TC	SHC	PI	TC	SHC	PI	TC	SHC	PI	TC	SHC	PI	TC	SHC	PI	TC	SHC	PI	TC	SHC	PI
	16	1620	0	903	2565	0	927	2924	0	967	3164	0	993	3852	0	1111	4550	0	1126	4964	0	1157	5729	0	1214
	18	1598	0	915	2543	0	939	2896	0	987	3132	0	1019	3812	0	1139	4527	0	1183	4946	0	1208	5706	0	1271
	20	1575	0	927	2520	0	952	2871	0	1003	3105	0	1037	3780	0	1159	4500	0	1220	4838	0	1263	5670	0	1330
	22	1553	0	939	2498	0	964	2835	0	1024	3060	0	1064	3740	0	1187	4473	0	1269	4892	0	1309	5643	0	1385
	24	1530	0	952	2475	0	976	2810	0	1044	3033	0	1089	3708	0	1215	4446	0	1318	4865	0	1359	5562	0	1441

4.3.31. RAF-50PXA/RAC-50FXA

COOLING [50Hz, 230V]

INDOOR		OUTDOOR TEMPERATURE (°CDB)																				
EWB	EDB	-10			21			27			32			35			40			43		
°C	°C	TC	SHC	PI	TC	SHC	PI	TC	SHC	PI	TC	SHC	PI	TC	SHC	PI	TC	SHC	PI	TC	SHC	PI
12.0	18	2796	2107	626	4700	4169	1103	4350	3849	1299	4100	3648	1435	3950	3488	1498	3700	3287	1607	3550	3127	1669
14.0	20	2796	2107	626	5050	4169	1103	4700	3889	1315	4400	3648	1451	4250	3528	1513	3950	3287	1622	3800	3167	1700
16.0	22	2796	2242	635	5400	4169	1117	5000	3889	1330	4700	3648	1466	4550	3528	1544	4250	3287	1654	4100	3167	1716
18.0	25	2998	2404	645	5750	4530	1132	5300	4209	1345	5000	3969	1482	4800	3809	1544	4500	3568	1669	4300	3408	1732
19.0	27	3099	2485	655	5950	4771	1146	5500	4410	1361	5200	4169	1498	5000	4009	1560	4700	3768	1669	4500	3608	1732
22.0	30	3436	2458	655	6600	4731	1146	6100	4370	1361	5750	4129	1513	5550	3969	1576	5000	3848	1732	4650	3768	1825
24.0	32	3672	2458	665	7050	4731	1161	6500	4370	1376	6150	4129	1513	5900	3969	1591	5200	3928	1778	4750	3889	1888

HEATING [50Hz, 230V]

INDOOR		OUTDOOR TEMPERATURE (°CDB)																				
	EDB	-15			-10			-7			-5			0			7			10			15		
	°C	TC	SHC	PI	TC	SHC	PI	TC	SHC	PI	TC	SHC	PI	TC	SHC	PI	TC	SHC	PI	TC	SHC	PI	TC	SHC	PI
	16	2340	0	1317	3705	0	1353	4224	0	1410	4570	0	1449	5564	0	1622	6572	0	1643	7170	0	1687	8275	0	1771
	18	2308	0	1335	3673	0	1371	4183	0	1440	4524	0	1486	5506	0	1663	6539	0	1727	7144	0	1762	8242	0	1855
	20	2275	0	1353	3640	0	1388	4147	0	1463	4485	0	1513	5460	0	1691	6500	0	1780	6988	0	1842	8190	0	1940
	22	2243	0	1371	3608	0	1406	4095	0	1494	4420	0	1552	5402	0	1732	6461	0	1851	7066	0	1910	8151	0	2020
	24	2210	0	1388	3575	0	1424	4059	0	1523	4381	0	1590	5356	0	1773	6422	0	1922	7027	0	1983	8034	0	2102

EWB : Evaporator Wet Bulb temperature (°C)
EDB : Evaporator Dry Bulb temperature (°C)
(°CDB) : Outdoor Unit Inlet Air Dry Temperature (°C)

TC : Total Capacity (W)
SHC : Sensible Heating Capacity (W)
PI : Power Input

4.4. CORRECTION FACTORS ACCORDING TO PIPING LENGTH

Correction Factor for **Cooling Capacity** according to Piping Length

The cooling capacity should be corrected according to the following formula:

CCA = CC x F

CCA: Actual Corrected Cooling Capacity (kcal/h)
CC: Cooling Capacity in the Performance Table (kcal/h)
F: Correction Factor Based on the Equivalent Piping Length

Correction Factor for **Heating Capacity** according to Piping Length

The heating capacity should be corrected according to the following formula:

HCA= HC x F

HCA: Actual Corrected Heating Capacity (kcal/h)
HC: Heating Capacity in the Performance Table (kcal/h)
F: Correction Factor Based on the Equivalent Piping Length

The correction factors are shown in the following figure.

Equivalent Piping Length for:

- One 90º Elbow is 0.5m.
- One 180º Curve is 1.5m.

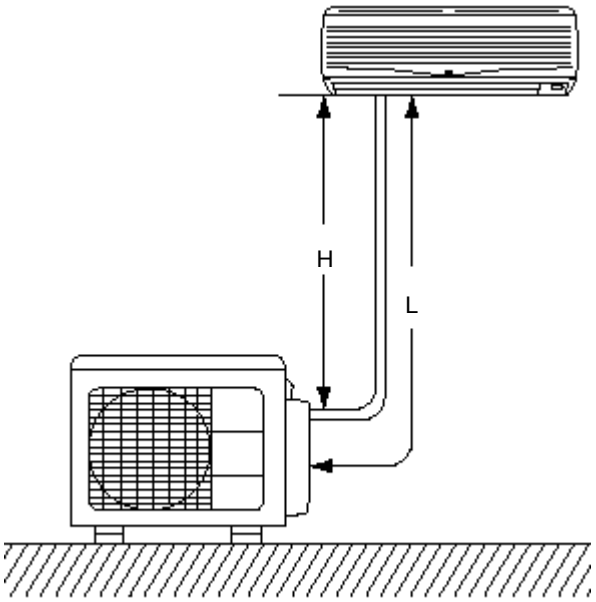

H: Vertical Distance Between Indoor Unit and Outdoor Units in Meters

L: Actual One-Way Piping Length Between Indoor Unit and Outdoor Unit in Meters

EL: Equivalent Total Distance Between Indoor Unit and Outdoor Unit in Meters
(Equivalent One-Way Piping Length)

Model 2.5, 3.5 kW

RAK-25QPA /RAC-25NPA, RAI-25RPA/RAC-25NPA, RAD-25RPA/RAC-25NPA, RAF-25RPA/RAC-25NPA,
RAK-35QPA /RAC-35NPA,RAI-35RPA/RAC-35NPA ,RAD-35RPA/RAC-35NPA, RAF-35RPA/RAC-35NPA

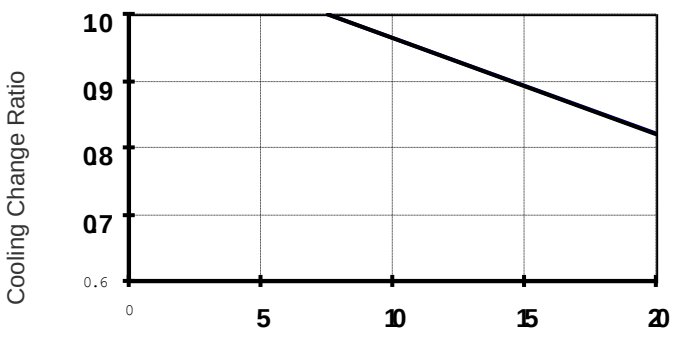

Pipe length (m)

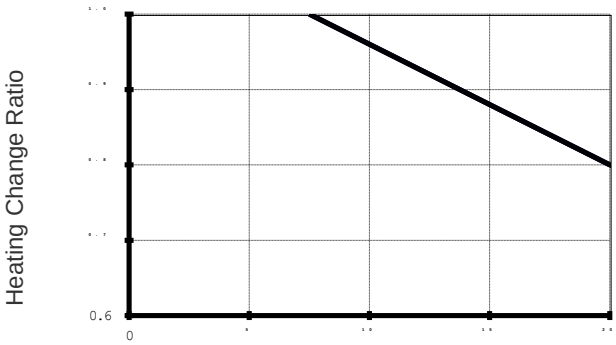

Pipe length (m)

Model 5.0 kW

RAK-50QPA, RAI-50RPA, RAF-50RPA /RAC-50NPA

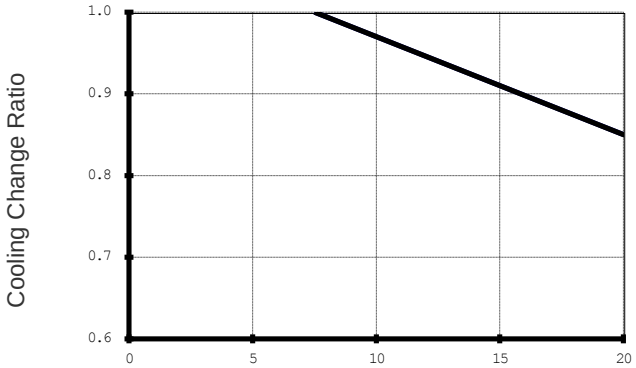

Pipe length (m)

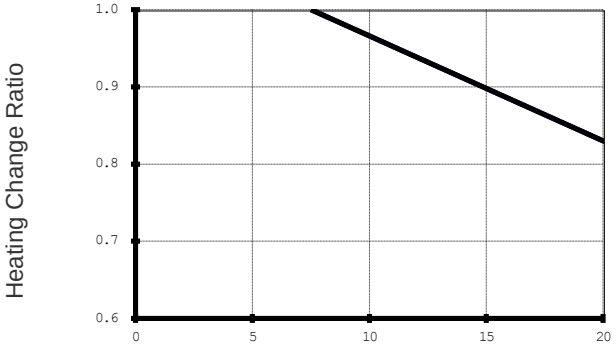

Pipe length (m)

Model Multi Outdoor 4.0 kW

RAM-35NP2A

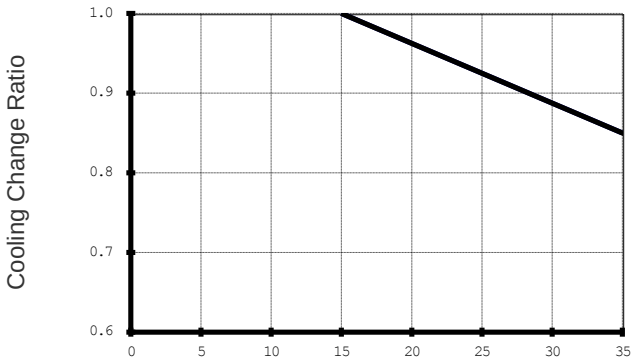

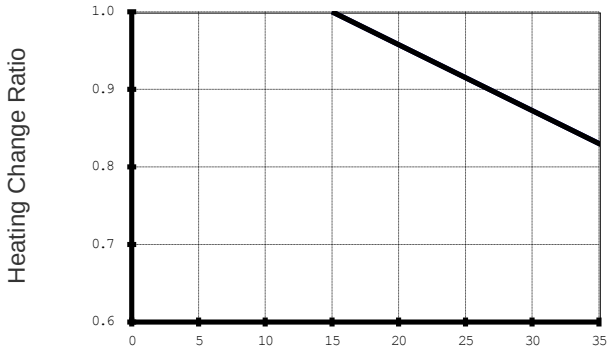

Model Multi Outdoor 5.3 kW

RAM-53NP2A

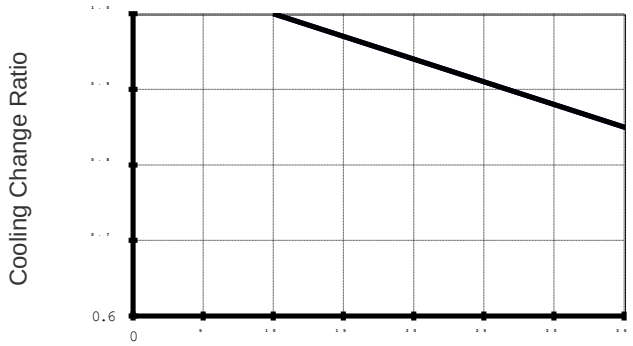

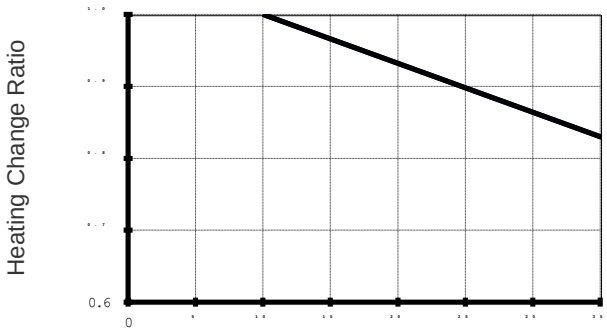

RAM-53NP3A

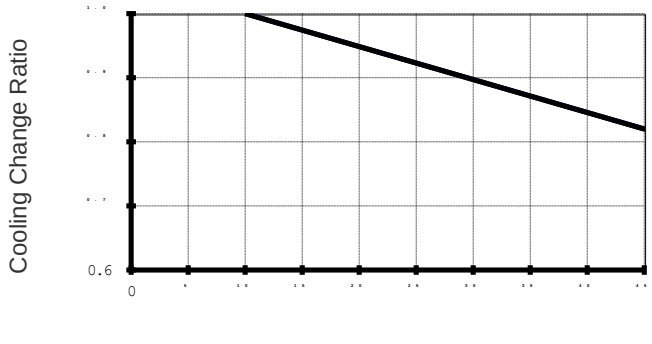

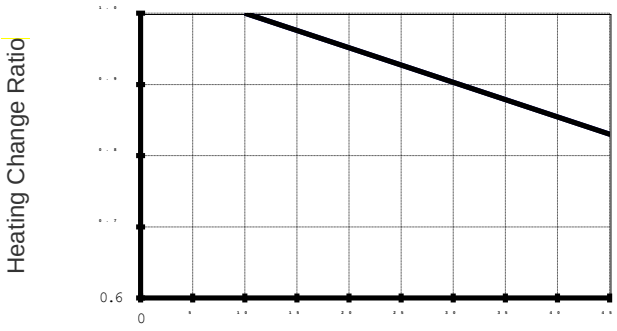

Model Multi Outdoor 6.0 kW

RAM-68NP3A

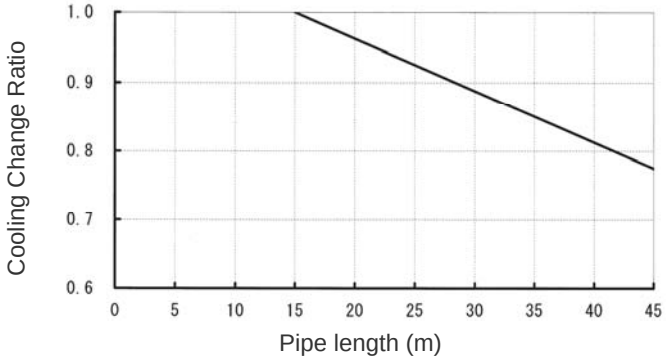

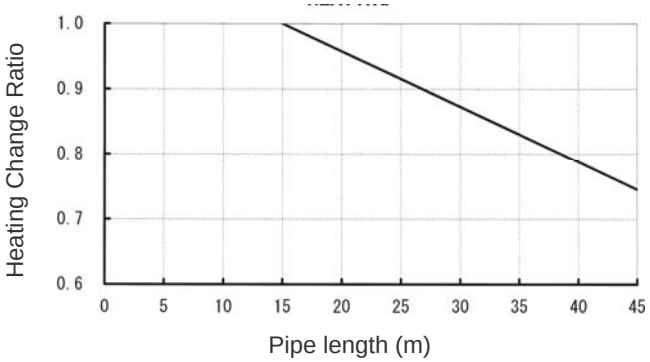

Model Multi Outdoor 7.1 kW

RAM-70NP4A

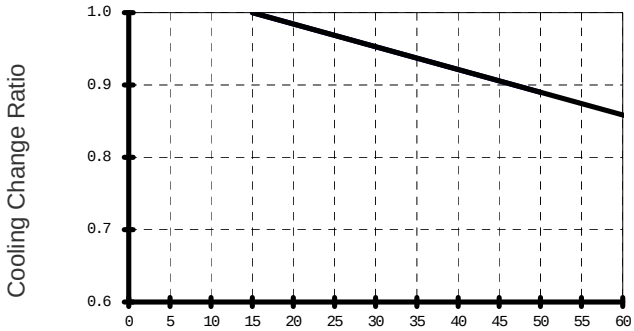

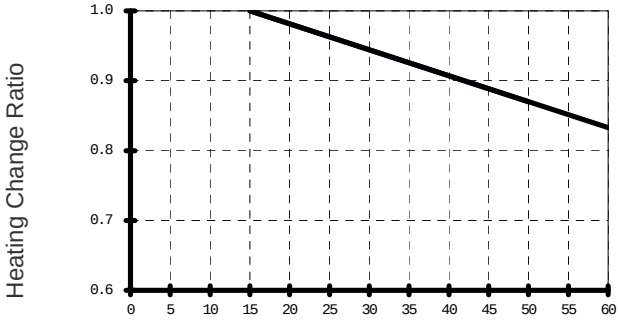

Model Multi Outdoor 8.5kW

RAM-90NP5A

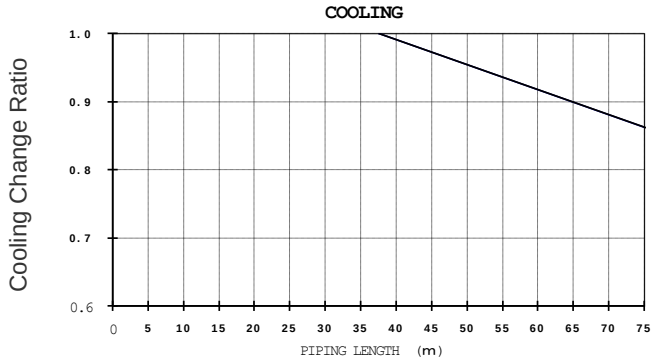

Pipe length (m)

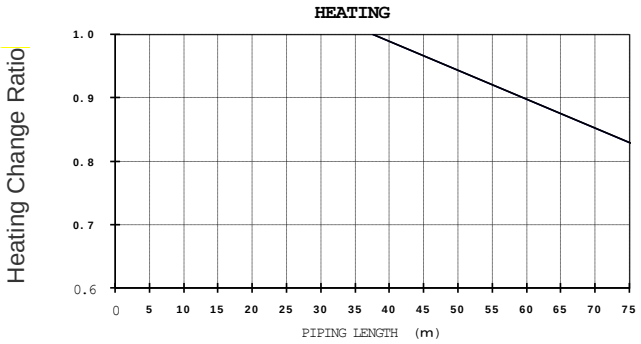

Pipe length (m)

Model Multi Outdoor 12.6kW

RAM-130NP6A

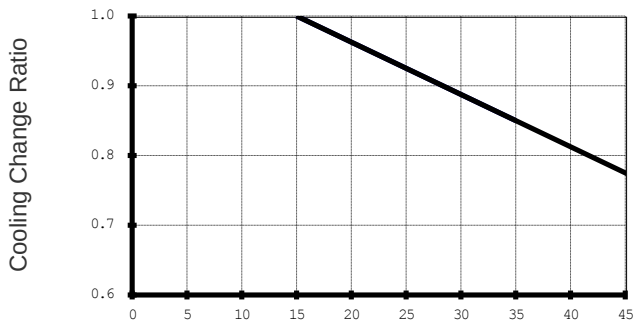

Pipe length (m)

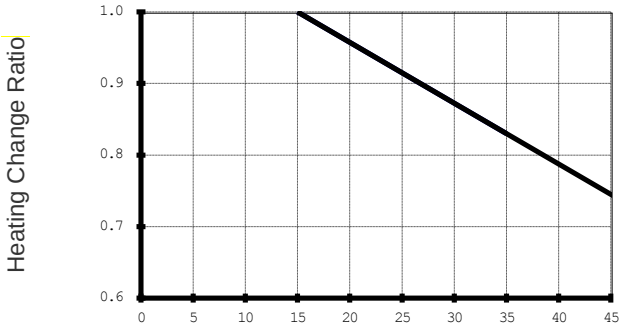

Pipe length (m)

Model Split Inverter 3.5kW

RAK-18PSA/RAC-18WSA, RAK-25PSA/RAC-25WSA, RAK-35PSA/RAC-35WSA

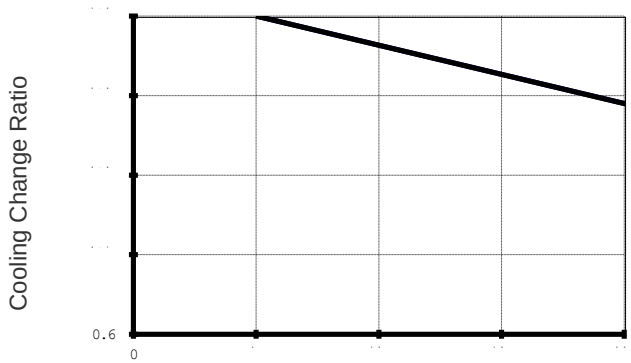

Pipe length (m)

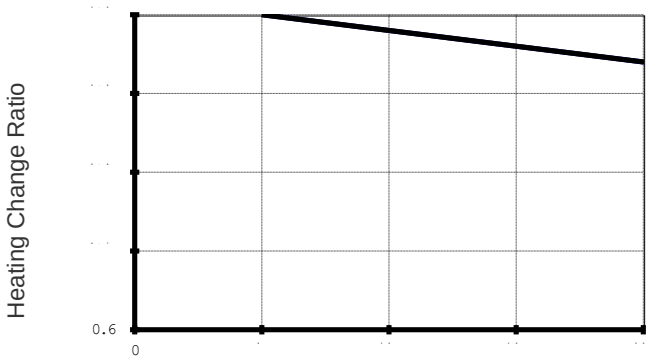

Pipe length (m)

Model Split Inverter 1.8kW /2.5kW/3.5kW

RAK-18PPA/RAC-18WPA, RAK-25PPA/RAC-25WPA, RAK-35PPA/RAC-35WPA

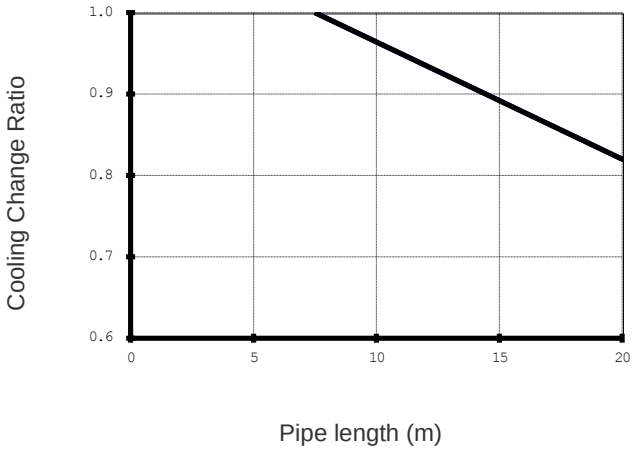

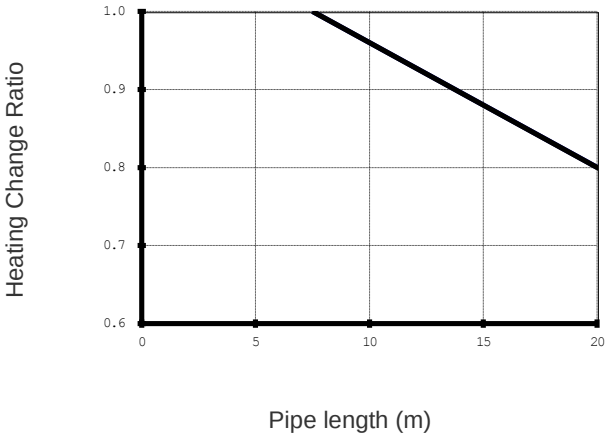

Model Split Inverter 5.0kW

RAK-50PPA/RAC-50WPA

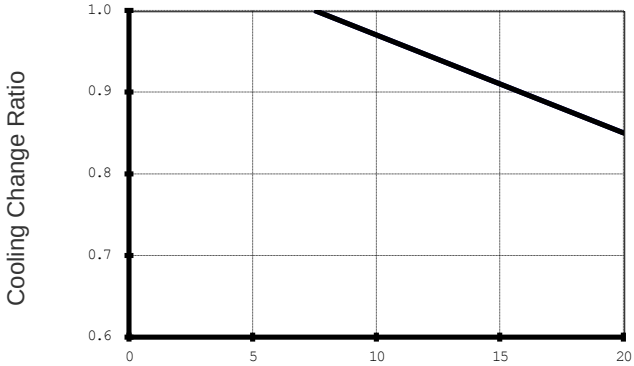

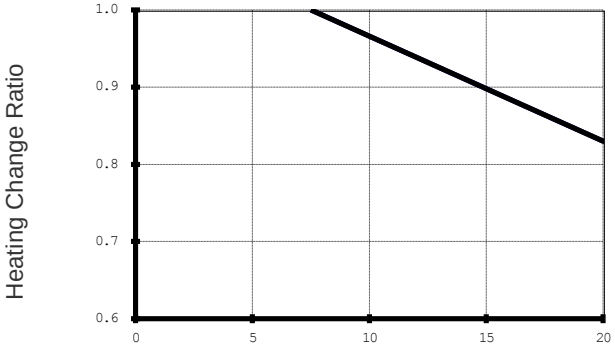

Model Split Inverter 6.0kW

RAK-60PPA/RAC-60WPA, RAK-70PPA/RAC-70WPA

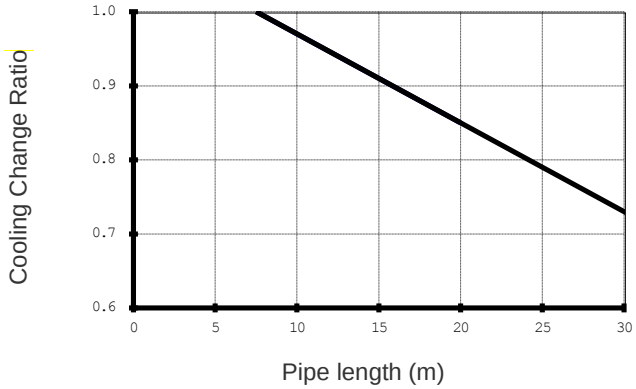

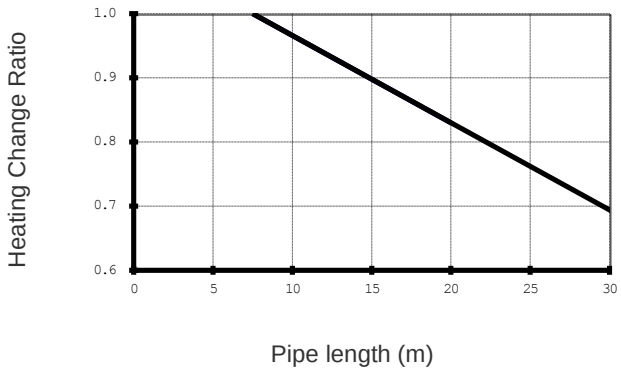

4.5. CORRECTION FACTORS ACCORDING TO DEFROSTING OPERATION

The heating capacity in the preceding paragraph, excludes the condition of the frost or the defrosting operation period. In consideration of the frost or the defrosting operation, the heating capacity is corrected by the equation below.

Corrected heating capacity = Defrost Correction factor x unit capacity

OUTDOOR TEMPERATURE (°CDB)	-15	-10	-5	0	7	10	15
Correction factor (humidity rate85% RH)	0.95	0.95	0.91	0.81	1.0	1.0	1.0

Correction Factor

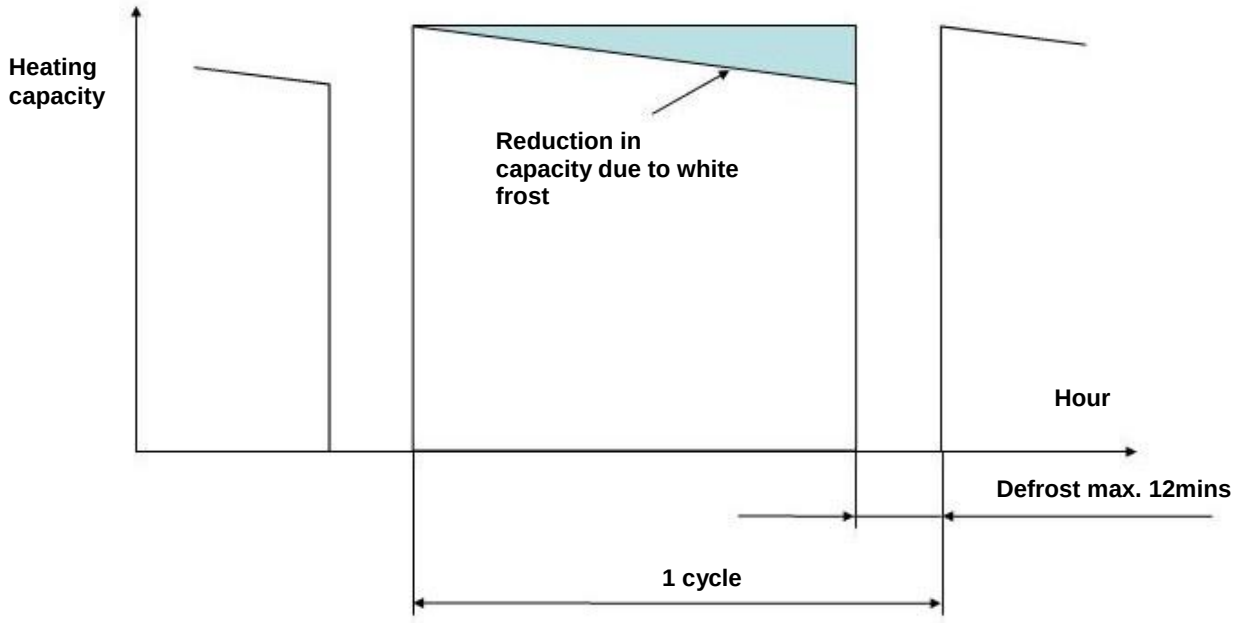

NOTE:

The correction factor is not valid for special conditions such as snowfall or operation in a transitional period.

4.6. COMBINATION TABLE FOR MONOZONE OUTDOOR

4.6.1. RAC-25/35/50NPA

		Cooling					Heating				
	Combination of indoor units	Room 1 capacity (kW)	Total capacity (kW)	Total input (W)	Total current (A) at 230V	EER Class	Room 1 capacity (kW)	Total capacity (kW)	Total input (W)	Total current (A) at 230V	COP Class
RAC-25NPA	RAI-25RPA	2.5	2.5 (0.9-3.0)	695 (155-1050)	3.05	3.60 A	3.5	3.5 (0.9-5.0)	940 (155-1400)	4.15	3.72 A
	RAD-25RPA	2.5	2.5 (0.9-3.0)	695 (155-1050)	2.92	3.60 A	3.5	3.5 (0.9-5.0)	970 (155-1400)	4.10	3.61 A
RAC-35NPA	RAI-35RPA	3.5	3.5 (0.9-4.0)	1100 (155-1280)	4.85	3.18 B	4.8	4.8 (0.9-6.6)	1360 (155-1920)	6.00	3.53 B
	RAD-35RPA	3.5	3.5 (0.9-4.0)	1240 (155-1280)	5.24	2.82 C	4.8	4.8 (0.9-6.6)	1700 (155-1920)	7.19	2.82 D
RAC-50NPA	RAI-50RPA	5.0	5.0 (0.9-5.2)	1990 (155-2200)	8.70	2.51 E	6.5	6.5 (0.9-8.1)	2160 (155-2700)	9.60	3.01 D
	RAD-50RPA	5.0	5.0 (0.9-5.6)	2000 (155-2060)	8.4	2.50 E	6.0	6.0 (0.9-7.5)	2300 (155-2530)	9.70	2.61 E

COMBINATION TABLE FOR MULTIZONE OUTDOOR

4.6.2. RAM-35NP2A

Whichever indoor units are installed, cooling and heating capacity depends on how many and which indoor units are operating at the same time.

POSSIBLE COMBINATIONS TO OPERATE		COOLING									HEATING							
		TOTAL (kW)	CAPACITY RATING (kW) (RANGE)		OUTDOOR UNIT				EER	Class	CAPACITY RATING (kW) (RANGE)		OUTDOOR UNIT				COP	Class
					TOTAL INPUT (W)	AMPERE(A)							TOTAL INPUT (W)	AMPERE(A) at 220V-240V				
				TOTAL		220V	230V	240V				TOTAL		220V	230V	240V		
ONE UNIT	1.2	1.2	1.20	1.20	370	1.7	1.6	1.6	3.24	A	1.80	1.80	495	2.3	2.2	2.1	3.64	A
			(1.00-2.00)		(200-480)						(1.10-3.20)		(200-650)					
	1.8	1.8	1.80	1.80	560	2.57	2.46	2.36	3.21	A	2.50	2.50	690	3.17	3.03	2.90	3.62	A
			(1.00-2.50)		(200-750)						(1.10-3.20)		(200-970)					
	2.5	2.5	2.50	2.50	780	3.6	3.4	3.3	3.21	A	3.40	3.40	870	4.0	3.8	3.7	3.91	A
			(1.00-3.10)		(200-880)						(1.10-4.40)		(200-1120)					
	3.5	3.5	3.50	3.50	1090	5.0	4.8	4.6	3.21	A	4.20	4.20	1080	5.0	4.7	4.5	3.89	A
			(1.00-4.00)		(200-1300)						(1.10-5.00)		(200-1300)					
TWO UNITS	1.2 + 1.2	2.4	1.20 + 1.20	2.40	650	3.0	2.9	2.7	3.69	A	1.80+1.80	3.60	850	3.9	3.7	3.6	4.24	A
			(1.50-2.80)		(200-780)						(1.50-4.20)		(200-950)					
	1.2 + 1.8	3.0	1.20 + 1.80	3.00	810	3.7	3.6	3.4	3.70	A	1.80+2.50	4.30	1020	4.7	4.5	4.3	4.22	A
			(1.50-3.50)		(200-930)						(1.50-5.00)		(200-1250)					
	1.2 + 2.5	3.7	1.17 + 2.43	3.60	968	4.4	4.3	4.1	3.72	A	1.64+3.56	5.20	1250	5.7	5.5	5.3	4.16	A
			(1.50-4.00)		(200-1050)						(1.50-5.50)		(200-1500)					
	1.2 + 3.5	4.7	0.92 + 2.68	3.60	968	4.4	4.3	4.1	3.72	A	1.42+3.78	5.20	1250	5.7	5.5	5.3	4.16	A
			(1.50 4.00)		(200-1050)						(1.50-5.50)		(200-1500)					
	1.8 + 1.8	3.6	1.80+1.80	3.60	970	4.5	4.3	4.1	3.71	A	2.50+2.50	5.00	1200	5.5	5.3	5.1	4.17	A
			(1.50-4.00)		(200-1050)						(1.50-5.50)		(200-1500)					
	1.8 + 2.5	4.3	1.51+2.09	3.60	970	4.5	4.3	4.1	3.71	A	2.03+3.07	5.20	1250	5.7	5.5	5.3	4.16	A
			(1.50-4.00)		(200-1050)						(1.50-5.50)		(200-1500)					
	1.8 + 3.5	5.3	1.22+2.38	3.60	970	4.5	4.3	4.1	3.71	A	1.78+3.42	5.20	1250	5.7	5.5	5.3	4.16	A
			(1.50-4.00)		(200-1050)						(1.50-5.50)		(200-1500)					
	2.5 + 2.5	5.0	1.80+1.80	3.60	970	4.5	4.3	4.1	3.71	A	2.60+2.60	5.20	1250	5.7	5.5	5.3	4.16	A
			(1.50-4.00)		(200-1050)						(1.50-5.50)		(200-1500)					
	2.5 + 3.5	6.0	1.50+2.10	3.60	970	4.5	4.3	4.1	3.71	A	2.33+2.87	5.20	1250	5.7	5.5	5.3	4.16	A
			(1.50-4.00)		(200-1050)						(1.50-5.50)		(200-1500)					

Indoor unit model	Nominal cooling capacity (kW)	Capacity (kW) at single unit operation		Suitable room size (m^2) At single unit operation	
		Cooling	Heating	Cooling	Heating
RAK-18QXA	1.8	1.00-2.50	1.10-3.20	8-12	10-13
RAK-25QXA	2.5	0.90-3.10	0.90-4.40	11-17	14-18
RAK-35QXA	3.5	0.90-4.00	0.90-5.00	16-24	17-22
RAK-18QPA	1.8	1.00-2.50	1.10-3.20	8-12	10-13
RAK-25QPA	2.5	1.00-3.10	1.10-4.40	11-17	14-18
RAK-35QPA	3.5	1.00-4.00	1.10-5.00	16-24	17-22
RAI-25RPA	2.5	1.00-3.10	1.10-4.40	11-17	14-18
RAI-35RPA	3.5	1.00-4.00	1.10-5.00	18-28	22-27
RAD-25RPA	2.5	1.00-3.10	1.10-4.40	11-17	14-18
RAD-35RPA	3.5	1.00-4.00	1.10-5.00	18-28	22-27
RAF-25QXA	2.5	0.90-3.10	0.90-4.40	11-17	14-18
RAF-35QXA	3.5	0.90-4.00	0.90-5.00	16-24	17-22
RAF-25RPA	2.5	0.90-3.10	0.90-4.40	11-17	14-18
RAF-35RPA	3.5	0.90-4.00	0.9-5.00	16-24	17-22

*Two units must be connected to the outdoor unit to avoid water condensation and result in water splash.
*One-unit values are for one unit operation with two indoor connected.
*Total nominal cooling capacity should not more than 6.0kW.

4.6.3. RAM-53NP2A

POSSIBLE COMBINATIONS TO OPERATE		COOLING									HEATING							
		TOTAL (kW)	CAPACITY RATING (kW) (RANGE)	TOTAL	OUTDOOR UNIT TOTAL INPUT (W)	AMPERE(A) 220V	230V	240V	EER	Class	CAPACITY RATING (kW) (RANGE)	TOTAL	OUTDOOR UNIT TOTAL INPUT (W)	AMPERE(A) 220V	230V	240V	COP	Class
ONE UNIT	1.2	1.2	1.20 (1.00-1.60)	1.20	370 (200-480)	1.7	1.6	1.6	3.24	A	1.80 (1.10-2.20)	1.80	495 (200-650)	2.3	2.2	2.1	3.64	A
	1.8	1.8	1.80 (1.00-2.00)	1.80	495 (200-750)	2.3	2.2	2.1	3.64	A	2.50 (1.10-3.20)	2.50	690 (200-1050)	3.2	3.0	2.9	3.62	A
	2.5	2.5	2.50 (1.00-2.80)	2.50	700 (200-980)	3.2	3.1	2.9	3.57	A	3.90 (1.10-4.70)	3.90	1060 (200-1380)	4.9	4.7	4.5	3.68	A
	3.5	3.5	3.50 (1.00-3.90)	3.50	1030 (200-1280)	4.7	4.5	4.3	3.40	A	4.80 (1.10-5.80)	4.80	1320 (200-1870)	6.1	5.8	5.6	3.64	A
	5.0	5.0	5.00 (1.00-5.50)	5.00	1510 (200-1660)	6.9	6.6	6.4	3.31	A	6.50 (1.10-7.20)	6.50	1800 (200-2010)	8.3	7.9	7.6	3.61	A
TWO UNITS	1.2+1.2	2.4	1.20+1.20 (1.50+2.80)	2.40	690 (200-980)	3.2	3.0	2.9	3.48	A	1.80+1.80 (1.50-4.20)	3.60	950 (200-1100)	4.4	4.2	4.0	3.79	A
	1.2+1.8	3.0	1.20+1.80 (1.50-3.50)	3.00	920 (200-1000)	4.2	4.0	3.9	3.26	A	1.80+2.50 (1.50-5.20)	4.30	1100 (200-1300)	5.1	4.8	4.6	3.91	A
	1.2+2.5	3.7	1.20+2.50 (1.50-4.00)	3.70	1030 (200-1300)	4.7	4.5	4.3	3.59	A	1.80+3.90 (1.50-6.40)	5.70	1450 (200-1780)	6.7	6.4	6.1	3.93	A
	1.2+3.5	4.7	1.20+3.50 (1.50-5.20)	4.70	1390 (200-1450)	6.4	6.1	5.9	3.38	A	1.80+4.80 (1.50-7.20)	6.60	1660 (200-2010)	7.6	7.3	7.0	3.98	A
	1.2+5.0	6.2	1.03+4.27 (1.50+5.90)	5.30	1528 (200-1660)	7.0	6.7	6.4	3.47	A	1.47-5.33 (1.50-7.20)	6.80	1790 (200-2010)	8.2	7.9	7.5	3.80	A
	1.8+1.8	3.6	1.80+1.80 (1.50-4.00)	3.60	1015 (200-1300)	4.7	4.5	4.3	3.55	A	2.50+2.50 (1.50-5.20)	5.00	1290 (200-1550)	5.9	5.7	5.4	3.88	A
	1.8+2.5	4.3	1.80+2.50 (1.50-4.60)	4.30	1167 (200-1450)	5.4	5.1	4.9	3.68	A	2.50+3.90 (1.50-6.30)	6.40	1700 (200-1920)	7.8	7.5	7.2	3.76	A
	1.8+3.5	5.3	1.80+3.50 (1.50-5.60)	5.30	1500 (200-1660)	6.9	6.6	6.3	3.53	A	2.31+4.49 (1.50-7.20)	6.80	1850 (200-2010)	8.5	8.1	7.8	3.68	A
	1.8+5.0	6.8	1.40+3.90 (1.50-5.90)	5.30	1528 (200-1660)	7.0	6.7	6.4	3.47	A	1.80+5.00 (1.50-7.20)	6.80	1820 (200-2010)	8.4	8.0	7.7	3.74	A
	2.5+2.5	5.0	2.50+2.50 (1.50-5.60)	5.00	1472 (200-1660)	6.8	6.5	6.2	3.40	A	3.40+3.40 (1.50-7.20)	6.80	1885 (200-2010)	8.7	8.3	7.9	3.61	A
	2.5+3.5	6.0	2.12+3.09 (1.50-5.70)	5.30	1528 (200-1660)	7.0	6.7	6.4	3.47	A	2.83+3.97 (1.50-7.20)	6.80	1820 (200-2010)	8.4	8.0	7.7	3.74	A
	3.5+3.5	7.0	2.65+2.65 (1.50-5.90)	5.30	1528 (200-1660)	7.0	6.7	6.4	3.47	A	3.40+3.40 (1.50-7.20)	6.80	1790 (200-2010)	8.2	7.9	7.5	3.80	A
	2.5+5.0	7.5	1.77+3.53 (1.50-5.90)	5.30	1528 (200-1660)	7.0	6.7	6.4	3.47	A	2.27+4.53 (1.50-7.20)	6.80	1790 (200-2010)	8.2	7.9	7.5	3.80	A
	3.5+5.0	8.5	2.18+3.12 (1.50-6.60)	5.30	1528 (200-1660)	7.0	6.7	6.4	3.47	A	2.80+4.00 (1.50-7.20)	6.80	1790 (200-2010)	8.2	7.9	7.5	3.80	A

Indoor unit model	Nominal cooling capacity (kW)	Capacity (kW) at single unit operation		Suitable room size (m^2) At single unit operation	
		Cooling	Heating	Cooling	Heating
RAK-18QXA	1.8	1.00-2.50	1.10-3.20	8-12	10-13
RAK-25QXA	2.5	0.90-3.10	0.90-4.40	11-17	14-18
RAK-35QXA	3.5	0.90-4.00	0.90-5.00	16-24	17-22
RAK-50QXA	5.0	0.90-5.20	0.90-7.50	23-34	23-29
RAK-18QPA	1.8	1.00-2.50	1.10-3.20	8-12	10-13
RAK-25QPA	2.5	1.00-3.10	1.10-4.40	11-17	14-18
RAK-35QPA	3.5	1.00-4.00	1.10-5.00	16-24	17-22
RAK-50QPA	5.0	1.00-5.60	1.10-7.20	23-34	23-29
RAI-25RPA	2.5	1.00-3.10	1.10-4.40	11-17	14-18
RAI-35RPA	3.5	1.00-4.00	1.10-5.00	18-28	22-27
RAI-50RPA	5.0	1.00-5.60	1.10-7.20	23-34	23-29
RAD-18RPA	1.8	1.00-2.50	1.10-3.20	8-12	10-13
RAD-25RPA	2.5	1.00-3.10	1.10-4.40	11-17	14-18
RAD-35RPA	3.5	1.00-4.00	1.10-5.00	18-28	22-27
RAD-50RPA	5.0	1.00-5.60	1.10-7.20	23-34	23-29
RAF-25QXA	2.5	0.90-3.10	0.90-4.40	11-17	14-18
RAF-35QXA	3.5	0.90-4.00	0.90-5.00	16-24	17-22
RAF-50QXA	5.0	0.90-5.20	0.90-8.10	23-34	23-29
RAF-25RPA	2.5	0.90-3.10	0.90-4.40	11-17	14-18
RAF-35RPA	3.5	0.90-4.00	0.9-5.00	16-24	17-22
RAF-50RPA	5.0	1.90-5.20	2.20-7.30	23-34	23-29

*Two units must be connected to the outdoor unit to avoid water condensation and result in water splash.
*One unit values are for one unit operation with two indoor connected.
*Total nominal cooling capacity should not be more than 8.5kW

4.6.4. RAM-53NP3A

Whichever indoor units are installed, cooling and heating capacity depends on how many and which indoor units are operating at the same time.

POSSIBLE COMBINATIONS TO OPERATE		COOLING									HEATING							
		TOTAL (kW)	CAPACITY RATING (kW) RANGE)		OUTDOOR UNIT				EER	Class	CAPACITY RATING (kW) (RANGE)		OUTDOOR UNIT				COP	Class
					TOTAL INPUT (W)	AMPERE(A)							TOTAL INPUT (W)	AMPERE(A)				
				TOTAL		220V	230V	240V				TOTAL		220V	230V	240V		
ONE UNIT	1.2	1.2	1.20 (1.00-1.60)	1.20	370 (200-480)	1.7	1.6	1.6	3.24	A	1.80 (1.10-2.20)	1.80	495 (200-650)	2.3	2.2	2.1	3.64	A
	1.8	1.8	1.80 (1.00-2.00)	1.80	495 (200-750)	2.3	2.2	2.1	3.64	A	2.50 (1.10-3.20)	2.50	690 (200-1050)	3.2	3.0	2.9	3.62	A
	2.5	2.5	2.50 (1.00-2.80)	2.50	700 (200-980)	3.2	3.1	2.9	3.57	A	3.90 (1.10-4.70)	3.90	1060 (200-1380)	4.9	4.7	4.5	3.68	A
	3.5	3.5	3.50 (1.00-3.90)	3.50	1030 (200-1280)	4.7	4.5	4.3	3.40	A	4.80 (1.10-5.80)	4.80	1320 (200-1870)	6.1	5.8	5.6	3.64	A
	5.0	5.0	5.00 (1.00-5.50)	5.00	1510 (200-1660)	6.9	6.6	6.4	3.31	A	6.50 (1.10-7.20)	6.50	1800 (200-2010)	8.3	7.9	7.6	3.61	A
TWO UNITS	1.2+1.2	2.4	1.20+1.20 (1.50+2.80)	2.40	690 (200-980)	3.2	3.0	2.9	3.48	A	1.80+1.80 (1.50-4.20)	3.60	950 (200-1100)	4.4	4.2	4.0	3.79	A
	1.2+1.8	3.0	1.20+1.80 (1.50-3.50)	3.00	920 (200-1000)	4.2	4.0	3.9	3.26	A	1.80+2.50 (1.50-5.20)	4.30	1100 (200-1300)	5.1	4.8	4.6	3.91	A
	1.2+2.5	3.7	1.20+2.50 (1.50-4.00)	3.70	1030 (200-1300)	4.7	4.5	4.3	3.59	A	1.80+3.90 (1.50-6.40)	5.70	1450 (200-1780)	6.7	6.4	6.1	3.93	A
	1.2+3.5	4.7	1.20+3.50 (1.50-5.20)	4.70	1390 (200-1450)	6.4	6.1	5.9	3.38	A	1.80-4.80 (1.50-7.20)	6.60	1660 (200-2010)	7.6	7.3	7.0	3.98	A
	1.2+5.0	6.2	1.03+4.27 (1.50-5.90)	5.30	1528 (200-1660)	7.0	6.7	6.4	3.47	A	1.47+5.33 (1.50-7.20)	6.80	1790 (200-2010)	8.2	7.9	7.5	3.80	A
	1.8+1.8	3.6	1.80+1.80 (1.50-4.00)	3.60	1015 (200-1300)	4.7	4.5	4.3	3.55	A	2.50+2.50 (1.50-5.20)	5.00	1290 (200-1550)	5.9	5.7	5.4	3.88	A
	1.8+2.5	4.3	1.80+2.50 (1.50-4.60)	4.30	1167 (200-1450)	5.4	5.1	4.9	3.68	A	2.50+3.90 (1.50-6.30)	6.40	1700 (200-1920)	7.8	7.5	7.2	3.76	A
	1.8+3.5	5.3	1.80+3.50 (1.50-5.60)	5.30	1500 (200-1660)	6.9	6.6	6.3	3.53	A	2.31+4.49 (1.50-7.20)	6.80	1850 (200-2010)	8.5	8.1	7.8	3.68	A
	1.8+5.0	6.8	1.40+3.90 (1.50-5.90)	5.30	1528 (200-1660)	7.0	6.7	6.4	3.47	A	1.80+5.00 (1.50-7.20)	6.80	1820 (200-2010)	8.4	8.0	7.7	3.74	A
	2.5+2.5	5.0	2.50+2.50 (1.50-5.60)	5.00	1472 (200-1660)	6.8	6.5	6.2	3.40	A	3.40+3.40 (1.50-7.20)	6.80	1885 (200-2010)	8.7	8.3	7.9	3.61	A
	2.5+3.5	6.0	2.21+3.09 (1.50-5.70)	5.30	1528 (200-1660)	7.0	6.7	6.4	3.47	A	2.83+3.97 (1.50-7.20)	6.80	1820 (200-2010)	8.4	8.0	7.7	3.74	A
	3.5+3.5	7.0	2.65+2.65 (1.50-5.90)	5.30	1528 (200-1660)	7.0	6.7	6.4	3.47	A	3.40+3.40 (1.50-7.20)	6.80	1790 (200-2010)	8.2	7.9	7.5	3.80	A
	2.5+5.0	7.5	1.77+3.53 (1.50-5.90)	5.30	1528 (200-1660)	7.0	6.7	6.4	3.47	A	2.27+4.53 (1.50-7.20)	6.80	1790 (200-2010)	8.2	7.9	7.5	3.80	A
	3.5+5.0	8.5	2.18+3.12 (1.50-6.60)	5.30	1528 (200-1660)	7.0	6.7	6.4	3.47	A	2.80+4.00 (1.50-7.20)	6.80	1790 (200-2010)	8.2	7.9	7.5	3.80	A

POSSIBLE COMBINATIONS TO OPERATE		COOLING									HEATING							
		TOTAL (kW)	CAPACITY RATING (kW) (RANGE)	TOTAL	OUTDOOR UNIT				EER	Class	CAPACITY RATING (kW) (RANGE)	TOTAL	OUTDOOR UNIT				COP	Class
					TOTAL INPUT (W)	AMPERE(A)							TOTAL INPUT (W)	AMPERE(A)				
						220V	230V	240V						220V	230V	240V		
THREE UNITS	1.2+1.2+1.2	3.6	1.20+1.20+1.20 (1.50-6.00)	3.60	1080 (200-1680)	5.0	4.7	4.5	3.33	A	1.80+1.80+1.80 (1.50-6.20)	5.40	1380 (200-1550)	6.3	5.9	5.8	3.91	A
	1.2+1.2+1.8	4.2	1.20+1.20+1.80 (1.50-6.00)	4.20	1250 (200-1680)	5.7	5.5	5.3	3.36	A	1.80+1.80+2.50 (1.50-6.60)	6.10	1580 (200-1760)	7.3	6.8	6.6	3.86	A
	1.2+1.2+2.5	4.9	1.20+1.20+2.50 (1.50-6.00)	4.90	1450 (200-1660)	6.7	6.4	6.1	3.38	A	1.63+1.63+3.54 (1.50-7.20)	6.80	1687 (200-1860)	7.7	7.3	7.1	4.03	A
	1.2+1.2+3.5	5.9	1.08+1.08+3.14 (1.50-6.60)	5.30	1555 (200-1680)	7.1	6.8	6.5	3.41	A	1.46+1.46+3.89 (1.50-7.20)	6.80	1687 (200-1860)	7.7	7.3	7.1	4.03	A
	1.2+1.2+5.0	7.4	0.86+0.86+3.58 (1.50-6.60)	5.30	1555 (200-1680)	7.1	6.8	6.5	3.41	A	1.21+1.21+4.38 (1.50-7.20)	6.80	1687 (200-1860)	7.7	7.3	7.1	4.03	A
	1.2+1.8+1.8	4.8	1.20+1.80+1.80 (1.50-6.00)	4.80	1420 (200-1660)	6.5	6.2	6.0	3.38	A	1.80+2.50+2.50 (1.50-7.20)	6.80	1687 (200-1860)	7.7	7.3	7.1	4.03	A
	1.2+1.8+2.5	5.5	1.16+1.73+2.41 (1.50-6.60)	5.30	1555 (200-1680)	7.1	6.8	6.5	3.41	A	1.49+2.07+3.23 (1.50-7.20)	6.80	1687 (200-1860)	7.7	7.3	7.1	4.03	A
	1.2+1.8+3.5	6.5	0.98+1.47+2.85 (1.50-6.60)	5.30	1555 (200-1680)	7.1	6.8	6.5	3.41	A	1.35+1.87+3.59 (1.50-7.20)	6.80	1687 (200-1860)	7.7	7.3	7.1	4.03	A
	1.2+1.8+5.0	8.0	0.8+1.19+3.31 (1.50-6.60)	5.30	1555 (200-1680)	7.1	6.8	6.5	3.41	A	1.13+1.57+4.09 (1.50-7.20)	6.80	1687 (200-1860)	7.7	7.3	7.1	4.03	A
	1.2+2.5+2.5	6.2	1.03+2.14+2.14 (1.50-6.60)	5.30	1555 (200-1680)	7.1	6.8	6.5	3.41	A	1.28+2.76+2.76 (1.50-7.20)	6.80	1687 (200-1860)	7.7	7.3	7.1	4.03	A
	1.2+2.5+3.5	7.2	0.88+1.84+2.58 (1.50-6.60)	5.30	1555 (200-1680)	7.1	6.8	6.5	3.41	A	1.17+2.53+3.11 (1.50-7.20)	6.80	1687 (200-1860)	7.7	7.3	7.1	4.03	A
	1.2+3.5+3.5	8.2	0.78+2.26+2.26 (1.50-6.60)	5.30	1555 (200-1680)	7.1	6.8	6.5	3.41	A	1.07+2.86+2.86 (1.50-7.20)	6.80	1687 (200-1860)	7.7	7.3	7.1	4.03	A
	1.8+1.8+1.8	5.4	1.77+1.77+1.773 (1.50-6.00)	5.30	1555 (200-1680)	7.1	6.8	6.5	3.41	A	2.27+2.27+2.27 (1.50-7.20)	6.80	1687 (200-1860)	7.7	7.3	7.1	4.03	A
	1.8+1.8+2.5	6.1	1.56+1.56+2.17 (1.50-6.40)	5.30	1555 (200-1680)	7.1	6.8	6.5	3.41	A	2.01+2.01+2.79 (1.50-7.20)	6.80	1687 (200-1860)	7.7	7.3	7.1	4.03	A
	1.8+1.8+3.5	7.1	1.34+1.34+2.61 (1.50-6.60)	5.30	1555 (200-1680)	7.1	6.8	6.5	3.41	A	1.72+1.72+3.35 (1.50-7.20)	6.80	1687 (200-1860)	7.7	7.3	7.1	4.03	A
	1.8+1.8+5.0	8.6	1.11+1.11+3.08 (1.50-6.60)	5.30	1555 (200-1680)	7.1	6.8	6.5	3.41	A	1.42+1.42+3.95 (1.50-7.20)	6.80	1687 (200-1860)	7.7	7.3	7.1	4.03	A
	1.8+2.5+2.5	6.8	1.40+1.95+1.95 (1.50-6.60)	5.30	1555 (200-1680)	7.1	6.8	6.5	3.41	A	1.80+2.50+2.50 (1.50-7.20)	6.80	1687 (200-1860)	7.7	7.3	7.1	4.03	A
	1.8+2.5+3.5	7.8	1.22+1.70+2.38 (1.50-6.60)	5.30	1555 (200-1680)	7.1	6.8	6.5	3.41	A	1.57+2.18+3.05 (1.50-7.20)	6.80	1687 (200-1860)	7.7	7.3	7.1	4.03	A
	1.8+3.5+3.5	8.8	1.08+2.11+2.11 (1.50-6.60)	5.30	1555 (200-1680)	7.1	6.8	6.5	3.41	A	1.40+2.70+2.70 (1.50-7.20)	6.80	1687 (200-1860)	7.7	7.3	7.1	4.03	A
	2.5+2.5+2.5	7.5	1.77+1.77+1.77 (1.50-6.60)	5.30	1555 (200-1680)	7.1	6.8	6.5	3.41	A	2.27+2.27+2.27 (1.50-7.20)	6.80	1687 (200-1860)	7.7	7.3	7.1	4.03	A
	2.5+2.5+3.5	8.5	1.56+1.56+2.18 (1.50-6.60)	5.30	1555 (200-1680)	7.14	6.83	6.54	3.41	A	2.00+2.00+2.80 (1.50-7.20)	6.80	1687 (200-1860)	7.7	7.3	7.1	4.03	A

Indoor unit model	Nominal cooling capacity (kW)	Capacity (kW) at single unit operation		Suitable room size (m^2) At single unit operation	
		Cooling	Heating	Cooling	Heating
RAK-18QXA	1.8	1.00-2.50	1.10-3.20	8-12	10-13
RAK-25QXA	2.5	0.90-3.10	0.90-4.40	11-17	14-18
RAK-35QXA	3.5	0.90-4.00	0.90-5.00	16-24	17-22
RAK-50QXA	5.0	0.90-5.20	0.90-7.50	23-34	23-29
RAK-18QPA	1.8	1.00-2.50	1.10-3.20	8-12	10-13
RAK-25QPA	2.5	1.00-3.10	1.10-4.40	11-17	14-18
RAK-35QPA	3.5	1.00-4.00	1.10-5.00	16-24	17-22
RAK-50QPA	5.0	1.00-5.60	1.10-7.20	23-34	23-29
RAI-25RPA	2.5	1.00-3.10	1.10-4.40	11-17	14-18
RAI-35RPA	3.5	1.00-4.00	1.10-5.00	18-28	22-27
RAI-50RPA	5.0	1.00-5.60	1.10-7.20	23-34	23-29
RAD-18RPA	1.8	1.00-2.50	1.10-3.20	8-12	10-13
RAD-25RPA	2.5	1.00-3.10	1.10-4.40	11-17	14-18
RAD-35RPA	3.5	1.00-4.00	1.10-5.00	18-28	22-27
RAD-50RPA	5.0	1.00-5.60	1.10-7.20	23-34	23-29
RAF-25QXA	2.5	0.90-3.10	0.90-4.40	11-17	14-18
RAF-35QXA	3.5	0.90-4.00	0.90-5.00	16-24	17-22
RAF-50QXA	5.0	0.90-5.20	0.90-8.10	23-34	23-29
RAF-25NPA	2.5	1.00-3.10	1.10-4.40	11-17	14-18
RAF-35NPA	3.5	1.00-4.00	1.10-5.00	16-24	17-22
RAF-50NPA	5.0	1.00-5.60	1.10-7.20	23-34	23-29
RAF-25RPA	2.5	0.90-3.10	0.90-4.40	11-17	14-18
RAF-35RPA	3.5	0.90-4.00	0.9-5.00	16-24	17-22
RAF-50RPA	5.0	1.90-5.20	2.20-7.30	23-34	23-29

*Two units must be connected to the outdoor unit to avoid water condensation and result in water splash.
*One-unit values are for one unit operation with two indoor connected.
*Total nominal cooling capacity should not be more than 8.8kW.

4.6.5. RAM-68NP3A

Whichever indoor units are installed, cooling and heating capacity depends on how many and which indoor units are operating at the same time.

POSSIBLE COMBINATIONS TO OPERATE		COOLING									HEATING							
		TOTAL (kW)	CAPACITY RATING (kW) RANGE)	TOTAL	OUTDOOR UNIT TOTAL INPUT (W)	AMPERE(A) 220V	230V	240V	EER	Class	CAPACITY RATING (kW) (RANGE)	TOTAL	OUTDOOR UNIT TOTAL INPUT (W)	AMPERE(A) 220V	230V	240V	COP	Class
ONE UNIT	1.2	1.2	1.20 (1.00-1.60)	1.20	370 (200-480)	1.7	1.6	1.6	3.24	A	1.80 (1.10-2.20)	1.80	560 (320-850)	2.6	2.5	2.4	3.21	C
	1.8	1.8	1.80 (1.50-2.00)	1.80	450 (280-500)	2.1	2.0	1.9	4.00	A	2.50 (1.80-3.50)	2.50	850 (320-1130)	3.9	3.7	3.6	2.94	D
	2.5	2.5	2.50 (1.50-2.80)	2.50	650 (280-720)	3.0	2.9	2.7	3.85	A	3.40 (1.80-4.70)	3.40	1130 (320-1480)	5.2	5.0	4.8	3.01	D
	3.5	3.5	3.50 (1.50-3.90)	3.50	1030 (280-1130)	4.7	4.5	4.3	3.40	A	4.30 (1.80-5.80)	4.30	1520 (320-1950)	7.0	6.7	6.4	2.83	D
	5.0	5.0	5.00 (1.50-5.60)	5.00	1640 (280-1800)	7.5	7.2	6.9	3.05	B	6.50 (1.80-7.20)	6.50	2400 (320-2530)	11.0	10.5	10.1	2.71	E
TWO UNITS	1.2+1.2	2.4	1.20+1.20 (1.50-2.80)	2.40	690 (380-980)	3.2	3.0	2.9	3.48	A	1.80+1.80 (2.20-4.70)	3.60	950 (200-1100)	4.4	4.2	4.0	3.79	A
	1.2+1.8	3.0	1.20+1.80 (1.50-3.50)	3.00	920 (380-1000)	4.2	4.0	3.9	3.26	A	1.80+2.50 (2.20-5.20)	4.30	1100 (200-1300)	5.1	4.8	4.6	3.91	A
	1.8+1.8	3.6	1.80+1.80 (2.00-4.00)	3.60	830 (380-1020)	3.8	3.6	3.5	4.34	A	2.50+2.50 (2.20-6.40)	5.00	1380 (390-2750)	6.3	6.1	5.8	3.62	A
	1.8+2.5	4.3	1.80+2.50 (2.00-4.70)	4.30	1120 (380-1360)	5.1	4.9	4.7	3.84	A	2.50+3.40 (2.20-7.20)	5.90	1680 (390-3000)	7.7	7.4	7.1	3.51	B
	1.8+3.5	5.3	1.80+3.50 (2.00-5.80)	5.30	1600 (380-1950)	7.3	7.0	6.7	3.31	A	2.50+4.30 (2.20-7.20)	6.80	2030 (390-3120)	9.3	8.9	8.5	3.35	C
	1.8+5.0	6.8	1.80+5.00 (2.00-7.10)	6.80	2420 (380-2820)	11.1	10.6	10.2	2.81	C	2.36+6.14 (2.20-9.50)	8.50	2470 (390-3120)	11.3	10.8	10.4	3.44	B
	2.5+2.5	5.0	2.50+2.50 (2.00-5.50)	5.00	1410 (380-1720)	6.5	6.2	5.9	3.55	A	3.60+3.60 (2.20-9.50)	7.20	2070 (390-3120)	9.5	9.1	8.7	3.48	B
	2.5+3.5	6.0	2.50+3.50 (2.00-6.60)	6.00	1950 (380-2380)	9.0	8.6	8.2	3.08	B	3.60 +4.30 (2.20-9.50)	7.90	2420 (390-3120)	11.1	10.6	10.2	3.26	C
	2.5+5.0	7.5	2.40+4.70 (2.00-7.50)	6.80	2420 (380-2980)	11.1	10.6	10.2	2.81	C	2.92+5.58 (2.20-9.50)	8.50	2470 (390-3120)	11.3	10.8	10.4	3.44	B
	3.5+3.5	7.0	3.50+3.50 (2.00-7.50)	6.80	2555 (380-2940)	11.7	11.2	10.8	2.66	D	4.25+4.25 (2.20-9.50)	8.50	2640 (390-3120)	12.1	11.6	11.1	3.22	C
	3.5+5.0	8.5	2.90+4.20 (2.00-7.50+	6.80	2420 (380-2890)	11.1	10.6	10.2	2.81	C	3.38+5.12 (2.20-9.50)	8.50	2470 (390-3120)	11.3	10.8	10.4	3.44	B
	5.0+5.0	10.0	3.55+3.55 (2.00-8.00)	6.80	2420 (380-3170)	11.1	10.6	10.2	2.81	C	4.25+4.25 (2.20-9.50)	8.50	2470 (390-3120)	11.3	10.8	10.4	3.44	B

	POSSIBLE COMBINATIONS TO OPERATE	COOLING									HEATING							
		TOTAL (kW)	CAPACITY RATING (kW) RANGE)	TOTAL	OUTDOOR UNIT TOTAL INPUT (W)	AMPERE(A) 220V	230V	240V	EER	Class	CAPACITY RATING (kW) (RANGE)	TOTAL	OUTDOOR UNIT TOTAL INPUT (W)	AMPERE(A) 220V	230V	240V	COP	Class
THREE UNITS	1.2+1.2 +1.2	3.6	1.20+1.20+1.20 (2.20-4.00)	3.60	1080 (420-1680)	5.0	4.7	4.5	3.33	A	1.80+1.80+1.80 (2.40-6.20)	5.40	1490 (430-1800)	6.8	6.5	6.3	3.62	A
	1.2+1.2 +1.8	4.2	1.20+1.20+1.80 (2.20-4.70)	4.20	1250 (240-1880)	5.7	5.5	5.3	3.36	A	1.80+.80+2.50 (2.40-6.60)	6.10	1680 (430-2100)	7.7	7.4	7.1	3.63	A
	1.2+1.2 +2.5	4.9	1.20+1.20+2.50 (2.20-5.80)	4.90	1450 (420-2280)	6.7	6.4	6.1	3.38	A	1.80+1.80+3.40 (2.20-9.30)	7.00	1910 (430-2200)	8.8	8.4	8.0	3.66	A
	1.2+1.2 +3.5	5.9	1.20+1.20+3.50 (2.20-6.60)	5.90	1590 (420-2480)	7.3	7.0	6.7	3.71	A	1.80+1.80+4.30 (2.40-9.50)	7.90	2130 (430-2500)	9.8	9.4	9.0	3.71	A
	1.2+1.2 +5.0	7.4	1.10+1.10+4.59 (2.20-7.80)	6.80	2120 (420-2890)	9.7	9.3	8.9	3.21	A	1.51+1.51+5.47 (2.40-9.50)	8.50	2260 (430-2600)	10.4	9.9	9.5	3.76	A
	1.2+1.8 +1.8	4.8	1.20+1.80+1.80 (2.20-5.90)	4.80	1450 (420-2280)	6.7	6.4	6.1	3.31	A	1.80+2.50+2.50 (2.20-9.30)	6.80	1860 (430-2400)	8.5	8.2	7.8	3.66	A
	1.2+1.8 +2.5	5.5	1.20+1.80+2.50 (2.20-5.90)	5.50	1590 (420-2480)	7.3	7.0	6.7	3.46	A	1.80+2.50+3.40 (2.40-9.50)	7.70	2110 (430-2600)	9.7	9.3	8.9	3.65	A
	1.2+1.8 +3.5	6.5	1.20+1.80+3.50 (2.20-6.60)	6.50	1750 (420-2480)	8.0	7.7	7.4	3.71	A	1.78+2.47+4.25 (2.40-9.50)	8.50	2290 (430-2600)	10.5	10.1	9.6	3.71	A
	1.2+1.8 +5.0	8.0	1.02+1.53+4.25 (2.20-8.00)	6.80	2120 (420-2890)	9.7	9.3	8.9	3.21	A	1.42+1.97+5.12 (2.40-9.50)	8.50	2260 (430-2600)	10.4	9.9	9.5	3.76	A
	1.2+2.5 +2.5	6.2	1.20+2.50+2.50 (1.50-6.60)	6.20	1590 (420-2480)	7.3	7.0	6.7	3.90	A	1.78+3.36+3.36 (2.40-9.50)	8.50	2290 (430-2600)	10.5	10.1	9.6	3.71	A
	1.2+2.5 +3.5	7.2	1.13+2.36+3.31 (2.20-7.80)	6.80	2120 (420-2890)	9.7	9.3	8.9	3.21	A	1.60+3.04+3.85 (2.40-9.50)	8.50	2290 (430-2600)	10.5	10.1	9.6	3.71	A
	1.2+2.5 +5.0	8.7	0.94+1.95+3.91 (2.20-8.00)	6.80	2085 (420-2960)	9.6	9.2	8.8	3.26	A	1.31+2.47+4.72 (2.40-9.50)	8.50	2260 (430-2600)	10.4	9.9	9.5	3.76	A
	1.2+3.5 +3.5	8.2	1.00+2.90+2.90 (2.20-8.00)	6.80	2120 (420-2890)	9.7	9.3	8.9	3.21	A	1.47+3.51+3.51 (2.40-9.50)	8.50	2260 (430-2600)	10.4	9.9	9.5	3.76	A
	1.2+3.5 +5.0	9.7	0.84+2.45+3.51 (2.20-8.00)	6.80	2085 (420-2960)	9.6	9.2	8.8	3.26	A	1.21+2.90+4.38 (2.40-9.50)	8.50	2260 (430-2600)	10.4	9.9	9.5	3.76	A
	1.2+5.0 +5.0	11.2	0.73+3.04+3.04 (2.20-8.00)	6.80	2120 (420-2960)	9.7	9.3	8.9	3.21	A	1.03+3.73+3.73 (2.40-9.50)	8.50	2260 (430-2600)	10.4	9.9	9.5	3.76	A
	1.8+1.8 +1.8	5.4	1.80+1.80+1.80 (2.20-5.90)	5.40	1250 (420-2190)	5.7	5.5	5.3	4.32	A	2.50+2.50+2.50 (2.40-9.50)	7.50	2050 (430-2600)	9.4	9.0	8.6	3.66	A
	1.8+1.8 +2.5	6.1	1.80+1.80+2.50 (2.20-6.70)	6.10	1590 (420-2480)	7.3	7.0	6.7	3.84	A	2.50+2.50+3.40 (2.40-9.50)	8.40	2290 (430-2600)	10.5	10.1	9.6	3.67	A
	1.8+1.8 +3.5	7.1	1.72+1.72+3.34 (2.20-7.80)	6.80	2120 (420-2890)	9.7	9.3	8.9	3.21	A	2.28+2.28+3.93 (2.40-9.50)	8.50	2290 (430-2600)	10.5	10.1	9.6	3.71	A
	1.8+1.8 +5.0	8.6	1.42+1.42+3.95 (2.20-8.00)	6.80	2085 (420-2960)	9.6	9.2	8.8	3.26	A	1.85+1.85+4.80 (2.40-9.50	8.50	2280 (430-2600)	10.5	10.0	9.6	3.73	A
	1.8+2.5 +2.5	6.8	1.80+2.50+2.50 (2.20-7.50)	6.80	2040 (420-2780)	9.4	9.0	8.6	3.33	A	2.28+3.11+3.11 (2.40-9.50)	8.50	2290 (430-2600)	10.5	10.1	9.6	3.71	A
	1.8+2.5 +3.5	7.8	1.57+2.18+3.05 (2.20-8.00)	6.80	2120 (420-2960)	9.7	9.3	8.9	3.21	A	2.08+2.83+3.58 (2.40-9.50)	8.50	2290 (430-2600)	10.5	10.1	9.6	3.71	A
	1.8+2.5 +5.0	9.3	1.32+1.83+3.66 (2.20-8.00)	6.80	2085 (440-2770)	9.6	9.2	8.8	3.26	A	1.71+2.33+4.46 (2.40-9.50)	8.50	2280 (430-2600)	10.5	10.0	9.6	3.73	A
	1.8+3.5 +3.5	8.8	1.39+2.70+2.70 (2.20-8.00)	6.80	2120 (420-2960)	9.7	9.3	8.9	3.21	A	1.91+3.29+3.29 (2.40-9.50)	8.50	2290 (430-2600)	10.5	10.1	9.6	3.71	A
	1.8+3.5 +5.0	10.3	1.19+2.31+3.30 (2.20-8.00)	6.80	2085 (420-2960)	9.6	9.2	8.8	3.26	A	1.60+2.75+4.15 (2.40-9.50)	8.50	2280 (430-2600)	10.5	10.0	9.6	3.73	A
	2.5+2.5 +2.5	7.5	2.27+2.27+2.27 (2.20-7.80)	6.80	2120 (420-2890)	9.7	9.3	8.9	3.21	A	2.83+2.83+2.83 (2.40-9.50)	8.50	2290 (430-2600)		10.1	9.6	3.71	A
	2.5+2.5 +2.5	8.5	2.00+2.00+2.80 (2.20-8.00)	6.80	2120 (420-2960)	9.7	9.3	8.9	3.21	A	2.60+2.60+3.29 (2.40-9.50)	8.50	2290 (430-2600)	10.5	10.1	9.6	3.71	A
	2.5+2.5 +5.0	10.0	1.70+1.70+3.40 (2.20-8.00)	6.80	2085 (420-2960)	9.6	9.2	8.8	3.26	A	2.17+2.17+4.15 (2.40-9.50)	8.50	2280 (430-2600)	10.5	10.0	9.6	3.73	A
	2.5+3.5 +3.5	9.5	1.79+2.51+2.51 (2.20-8.00)	6.80	2120 (420-2960)	9.7	9.3	8.9	3.21	A	2.41+3.05+3.05 (2.40-9.50)	8.50	2290 (430-2600)	10.5	10.1	9.6	3.71	A
	2.5+3.5 +5.0	11.0	1.55+2.16+3.09 (2.20-8.00)	6.80	2090 (420-2960)	9.60	9.18	8.80	3.25	A	2.04+2.57+3.89 (2.40-9.50)	8.50	2280 (430-2600)	10.5	10.0	9.6	3.73	A
	3.5+3.5 +3.5	10.5	2.27+2.27+2.27 (2.20-8.00)	6.80	2120 (420-2960)	9.73	9.31	8.92	3.21	A	2.83+2.83+2.83 (2.40-9.50)	8.50	2280 (430-2600)	10.5	10.0	9.6	3.73	A

Indoor unit model	Nominal cooling capacity (kW)	Capacity (kW) at single unit operation		Suitable room size (m^2) At single unit operation	
		Cooling	Heating	Cooling	Heating
RAK-18QXA	1.8	1.00-2.50	1.10-3.20	8-12	10-13
RAK-25QXA	2.5	0.90-3.10	0.90-4.40	11-17	14-18
RAK-35QXA	3.5	0.90-4.00	0.90-5.00	16-24	17-22
RAK-50QXA	5.0	0.90-5.20	0.90-7.50	23-34	23-29
RAK-18QPA	1.8	1.00-2.50	1.10-3.20	8-12	10-13
RAK-25QPA	2.5	1.00-3.10	1.10-4.40	11-17	14-18
RAK-35QPA	3.5	1.00-4.00	1.10-5.00	16-24	17-22
RAK-50QPA	5.0	1.00-5.60	1.10-7.20	23-34	23-29
RAI-25RPA	2.5	1.00-3.10	1.10-4.40	11-17	14-18
RAI-35RPA	3.5	1.00-4.00	1.10-5.00	18-28	22-27
RAI-50RPA	5.0	1.00-5.60	1.10-7.20	23-34	23-29
RAD-18RPA	1.8	1.00-2.50	1.10-3.20	8-12	10-13
RAD-25RPA	2.5	1.00-3.10	1.10-4.40	11-17	14-18
RAD-35RPA	3.5	1.00-4.00	1.10-5.00	18-28	22-27
RAD-50RPA	5.0	1.00-5.60	1.10-7.20	23-34	23-29
RAF-25QXA	2.5	0.90-3.10	0.90-4.40	11-17	14-18
RAF-35QXA	3.5	0.90-4.00	0.90-5.00	16-24	17-22
RAF-50QXA	5.0	0.90-5.20	0.90-8.10	23-34	23-29
RAF-25RPA	2.5	0.90-3.10	0.90-4.40	11-17	14-18
RAF-35RPA	3.5	0.90-4.00	0.9-5.00	16-24	17-22
RAF-50RPA	5.0	1.90-5.20	2.20-7.30	23-34	23-29

*Two units must be connected to the outdoor unit to avoid water condensation and result in water splash.
*One-unit values are for one unit operation with two indoor connected.
*Total nominal cooling capacity should not be more than 8.8kW

4.6.6. RAM-70NP4A

Whichever indoor units are installed, cooling and heating capacity depends on how many and which indoor units are operating at the same time.

POSSIBLE COMBINATIONS TO OPERATE		COOLING									HEATING							
		TOTAL (kW)	CAPACITY RATING (kW) (RANGE)	OUTDOOR UNIT					EER	Class	CAPACITY RATING (kW) (RANGE)	OUTDOOR UNIT					COP	Class
				TOTAL	TOTAL INPUT (W)	AMPERE (A)						TOTAL	TOTAL INPUT (W)	AMPERE (A)				
						220V	230V	240V						220V	230V	240V		
ONE UNIT	1.2	1.2	1.20	1.20	370	1.7	1.6	1.6	3.24	A	1.80	1.80	560	2.6	2.5	2.4	3.21	C
			(1.00-1.60)		(200-480)						(1.10-2.20)		(320-850)					
	1.8	1.8	1.80	1.80	450	2.1	2.0	1.9	4.00	A	2.50	2.50	850	3.9	3.7	3.6	2.94	D
			(1.50-2.00)		(280-500)						(1.80-3.50)		(320-1130)					
	2.5	2.5	2.50	2.50	650	3.0	2.9	2.7	3.85	A	3.40	3.40	1130	5.2	5.0	4.8	3.01	D
			(1.50-2.80)		(280-720)						(1.80-4.70)		(320-1480)					
	3.5	3.5	3.50	3.50	1030	4.7	4.5	4.3	3.40	A	4.30	4.30	1520	7.0	6.7	6.4	2.83	D
			(1.50-3.90)		(280-1130)						(1.80-5.80)		(320-1950)					
	5.0	5.0	5.00	5.00	1640	7.5	7.2	6.9	3.05	B	6.50	6.50	2400	11.0	10.5	10.1	2.71	E
			(1.50-5.60)		(280-1800)						(1.80-7.20)		(320-2530)					
TWO UNITS	1.2+1.2	2.40	1.20+1.20	2.40	690	3.2	3.0	2.9	3.48	A	1.80+1.80	3.60	950	4.4	4.2	4.0	3.79	A
			(1.50-2.80)		(380-980)						(2.20-4.70)		(200-1100)					
	1.2+1.8	3.00	1.20+1.80	3.00	920	4.2	4.0	3.9	3.26	A	1.80+2.50	4.30	1100	5.1	4.8	4.6	3.91	A
			(1.50-3.50)		(380-1000)						(2.20-5.20)		(200-1300)					
	1.2+2.5	3.70	1.20+2.50	3.70	1030	4.7	4.5	4.3	3.59	A	1.80+3.40	5.20	1450	6.7	6.4	6.1	3.59	B
			(1.50-4.00)		(380-1300)						(2.20-6.40)		(200-1780)					
	1.2+3.5	4.70	1.20+3.50	4.70	1390	6.4	6.1	5.9	3.38	A	1.80+4.30	6.10	1660	7.6	7.3	7.0	3.67	A
			(1.50-5.20)		(380-1450)						(2.20-7.20)		(200-2010)					
	1.2+5.0	6.20	1.2+5.00	6.20	1850	8.5	8.1	7.8	3.35	A	1.80+6.50	8.30	2470	11.3	10.8	10.4	3.36	C
			(1.50-5.90)		(380-2380)						(2.20-7.20)		(390-3120)					
	1.8+1.8	3.6	1.80+1.80	3.60	830	3.8	3.6	3.5	4.34	A	2.50+2.50	5.00	1380	6.3	6.1	5.8	3.62	A
			(2.00-4.00)		(380-1020)						(2.20-6.40)		(390-2750)					
	1.8+2.5	4.3	1.8+2.5	4.30	1120	5.1	4.9	4.7	3.84	A	2.50+3.40	5.90	1680	7.7	7.4	7.1	3.51	B
			(2.00-4.70)		(380-1360)						(2.20-7.20)		(390-3000)					
	1.8+3.5	5.3	1.8+3.5	5.30	1600	7.3	7.0	6.7	3.31	A	2.50+4.30	6.80	2030	9.3	8.9	8.5	3.35	C
			(2.00-5.80)		(380-1950)						(2.20-7.20)		(390-3120)					
	1.8+5.0	6.8	1.8+5	6.80	2420	11.1	10.6	10.2	2.81	C	2.36+6.14	8.50	2470	11.3	10.8	10.4	3.44	B
			(2.00-7.10)		(380-2820)						(2.20-9.50)		(390-3120)					
	2.5+2.5	5.0	2.50+2.50	5.00	1410	6.5	6.2	5.9	3.55	A	3.60+3.60	7.20	2070	9.5	9.1	8.7	3.48	B
			(2.00-5.50)		(380-1720)						(2.20-9.50)		(390-3120)					
	2.5+3.5	6.0	2.50+3.50	6.00	1950	9.0	8.6	8.2	3.08	B	3.6+4.30	7.90	2420	11.1	10.6	10.2	3.26	C
			(2.00-6.60)		(380-2380)						(2.20-9.50)		(390-3120)					
	2.5+5.0	7.5	2.33+4.67	7.00	2490	11.4	10.9	10.5	2.81	C	2.92+5.58	8.50	2470	11.3	10.8	10.4	3.44	B
			(2.00-7.50)		(380-2980)						(2.20-9.50)		(390-3120)					
	3.5+3.5	7.0	3.5+3.5	7.00	2630	12.1	11.6	11.1	2.66	D	4.25+4.25	8.50	2640	12.1	11.6	11.1	3.22	C
			(2.00-7.50)		(380-2940)						(2.20-9.50)		(390-3120)					
	3.5+5.0	8.5	2.88+4.12	7.00	2490	11.4	10.9	10.5	2.81	C	3.38+5.12	8.50	2470	11.3	10.8	10.4	3.44	B
			(2.00-7.50)		(380-2890)						(2.20-9.50)		(390-3120)					
	5.0+5.0	10.0	3.50+3.50	7.00	2490	11.4	10.9	10.5	2.81	C	4.25+4.25	8.50	2470	11.3	10.8	10.4	3.44	B
			(2.00-8.00)		(380-3170)						(2.20-9.50)		(390-3120)					

POSSIBLE COMBINATIONS TO OPERATE		COOLING									HEATING							
		TOTAL (kW)	CAPACITY RATING (kW) (RANGE)		OUTDOOR UNIT				EER	Class	CAPACITY RATING (kW) (RANGE)		OUTDOOR UNIT				COP	Class
				TOTAL	TOTAL INPUT (W)	AMPERE (A)						TOTAL	TOTAL INPUT (W)	AMPERE (A)				
						220V	230V	240V						220V	230V	240V		
THREE UNITS	1.2+1.2+1.2	3.6	1.2+1.2+1.2	3.60	1080	5.0	4.7	4.5	3.33	A	1.8+1.8+1.8	5.40	1490	6.8	6.5	6.3	3.62	A
			(2.20-4.00)		(420-1680)						(2.40-6.20)		(430-1800)					
	1.2+1.2+1.8	4.2	1.2+1.2+1.8	4.20	1250	5.7	5.5	5.3	3.36	A	1.8+1.8+2.5	6.10	1680	7.7	7.4	7.1	3.63	A
			(2.20-4.70)		(240-1880)						(2.40-6.60)		(430-2100)					
	1.2+1.2+2.5	4.9	1.2+1.2+2.5	4.90	1450	6.7	6.4	6.1	3.38	A	1.8+1.8+3.4	7.00	1910	8.8	8.4	8.0	3.66	A
			(2.20-5.80)		(420-2280)						(2.20-9.30)		(430-2200)					
	1.2+1.2+3.5	5.9	1.2+1.2+3.5	5.90	1590	7.3	7.0	6.7	3.71	A	1.8+1.8+4.3	7.90	2130	9.8	9.4	9.0	3.71	A
			(2.20-6.60)		(420-2480)						(2.40-9.50)		(430-2500)					
	1.2+1.2+5	7.4	1.14+1.14+4.73	7.00	2180	10.0	9.6	9.2	3.21	A	1.51+1.51+5.47	8.50	2260	10.4	9.9	9.5	3.76	A
			(2.20-7.80)		(420-2890)						(2.40-9.50)		(430-2600)					
	1.2+1.8+1.8	4.8	1.2+1.8+1.8	4.80	1450	6.7	6.4	6.1	3.31	A	1.8+2.5+2.5	6.80	1860	8.5	8.2	7.8	3.66	A
			(2.20-5.90)		(420-2280)						(2.20-9.30)		(430-2400)					
	1.2+1.8+2.5	5.5	1.2+1.8+2.5	5.50	1590	7.3	7.0	6.7	3.46	A	1.8+2.5+3.4	7.70	2110	9.7	9.3	8.9	3.65	A
			(2.20-5.90)		(420-2480)						(2.40-9.50)		(430-2600)					
	1.2+1.8+3.5	6.5	1.2+1.8+3.5	6.50	1750	8.0	7.7	7.4	3.71	A	1.78+2.47+4.25	8.50	2290	10.5	10.1	9.6	3.71	A
			(2.20-6.60)		(420-2480)						(2.40-9.50)		(430-2600)					
	1.2+1.8+5.0	8	1.05+1.58+4.38	7.00	2180	10.0	9.6	9.2	3.21	A	1.42+1.97+5.12	8.50	2260	10.4	9.9	9.5	3.76	A
			(2.20-8.00)		(420-2890)						(2.40-9.50)		(430-2600)					
	1.2+2.5+2.5	6.2	1.2+2.5+2.5	6.20	1590	7.3	7.0	6.7	3.90	A	1.78+3.36+3.36	8.50	2290	10.5	10.1	9.6	3.71	A
			(1.50-6.60)		(420-2480)						(2.40-9.50)		(430-2600)					
	1.2+2.5+3.5	7.2	1.17+2.43+3.40	7.00	2180	10.0	9.6	9.2	3.21	A	1.61+3.04+3.85	8.50	2290	10.5	10.1	9.6	3.71	A
			(2.20-7.80)		(420-2890)						(2.40-9.50)		(430-2600)					
	1.2+2.5+5.0	8.7	0.97+2.01+4.02	7.00	2150	9.9	9.4	9.0	3.26	A	1.31+2.47+4.72	8.50	2260	10.4	9.9	9.5	3.76	A
			(2.20-8.00)		(420-2960)						(2.40-9.50)		(430-2600)					
	1.2+3.5+3.5	8.2	1.02+2.99+2.99	7.00	2180	10.0	9.6	9.2	3.21	A	1.47+3.51+3.51	8.50	2260	10.4	9.9	9.5	3.76	A
			(2.20-8.00)		(420-2890)						(2.40-9.50)		(430-2600)					
	1.2+3.5+5.0	9.7	0.87+2.53+3.61	7.00	2150	9.9	9.4	9.0	3.26	A	1.21+2.90+4.38	8.50	2260	10.4	9.9	9.5	3.76	A
			(2.20-8.00)		(420-2960)						(2.40-9.50)		(430-2600)					
	1.2+5.0+5.0	11.2	0.75+3.13+3.13	7.00	2180	10.0	9.6	9.2	3.21	A	1.03+3.73+3.73	8.50	2260	10.4	9.9	9.5	3.76	A
			(2.20-8.00)		(420-2960)						(2.40-9.50)		(430-2600)					
	1.8+1.8+1.8	5.4	1.8+1.8+1.8	5.40	1250	5.7	5.5	5.3	4.32	A	2.50+2.50+2.50	7.50	2050	9.4	9.0	8.6	3.66	A
			(2.20-5.90)		(420-2190)						(2.40-9.50)		(430-2600)					
	1.8+1.8+2.5	6.1	1.8+1.8+2.5	6.10	1590	7.3	7.0	6.7	3.84	A	2.5+2.5+3.40	8.40	2290	10.5	10.1	9.6	3.67	A
			(2.20-6.70)		(420-2480)						(2.40-9.50)		(430-2600)					
	1.8+1.8+3.5	7.1	1.77+1.77+3.45	7.00	2180	10.0	9.6	9.2	3.21	A	2.28+2.28+3.93	8.50	2290	10.5	10.1	9.6	3.71	A
			(2.20-7.80)		(420-2890)						(2.40-9.50)		(430-2600)					
	1.8+1.8+5	8.6	1.47+1.47+4.07	7.00	2150	9.9	9.4	9.0	3.26	A	1.85+1.85+4.80	8.50	2280	10.5	10.0	9.6	3.73	A
			(2.20-8.00)		(420-2960)						(2.40-9.50)		(430-2600)					
	1.8+2.5+2.5	6.8	1.8+2.5+2.5	6.80	2040	9.4	9.0	8.6	3.33	A	2.28+3.11+3.11	8.50	2290	10.5	10.1	9.6	3.71	A
			(2.20-7.50)		(420-2780)						(2.40-9.50)		(430-2600)					
	1.8+2.5+3.5	7.8	1.65+2.24+3.14	7.00	2180	10.0	9.6	9.2	3.21	A	2.08+2.83+3.58	8.50	2290	10.5	10.1	9.6	3.71	A
			(2.20-8.00)		(420-2960)						(2.40-9.50)		(430-2600)					
	1.8+2.5+5	9.3	1.35+1.88+3.76	7.00	2150	9.9	9.4	9.0	3.26	A	1.71+2.33+4.46	8.50	2280	10.5	10.0	9.6	3.73	A
			(2.20-8.00)		(440-2770)						(2.40-9.50)		(430-2600)					

POSSIBLE COMBINATIONS TO OPERATE		COOLING									HEATING							
		TOTAL (kW)	CAPACITY RATING (kW) (RANGE)	OUTDOOR UNIT					EER	Class	CAPACITY RATING (kW) (RANGE)	OUTDOOR UNIT					COP	Class
				TOTAL	TOTAL INPUT (W)	AMPERE (A)						TOTAL	TOTAL INPUT (W)	AMPERE (A)				
						220V	230V	240V						220V	230V	240V		
THREE UNITS	1.8+3.5+3.5	8.8	1.43+2.78+2.78 (2.20-8.00)	7.00	2180 (420-2960)	10.0	9.6	9.2	3.21	A	1.91+3.29+3.29 (2.40-9.50)	8.50	2290 (430-2600)	10.5	10.1	9.6	3.71	A
	1.8+3.5+5.0	10.3	1.22+2.38+3.40 (2.20-8.00)	7.00	2150 (420-2960)	9.9	9.4	9.0	3.26	A	1.60+2.75+4.15 (2.40-9.50)	8.50	2280 (430-2600)	10.5	10.0	9.6	3.73	A
	2.5+2.5+2.5	7.5	2.33+2.33+2.33 (2.20-7.80)	7.00	2180 (420-2890)	10.0	9.6	9.2	3.21	A	2.83+2.83+2.83 (2.40-9.50)	8.50	2290 (430-2600)	10.5	10.1	9.6	3.71	A
	2.5+2.5+3.5	8.5	2.06+2.06+2.88 (2.20-8.00)	7.00	2180 (420-2960)	10.0	9.6	9.2	3.21	A	2.60+2.60+3.29 (2.40-9.50)	8.50	2290 (430-2600)	10.5	10.1	9.6	3.71	A
	2.5+2.5+5	10	1.75+1.75+3.50 (2.20-8.00)	7.00	2150 (420-2960)	9.9	9.4	9.0	3.26	A	2.17+2.17+4.15 (2.40-9.50)	8.50	2280 (430-2600)	10.5	10.0	9.6	3.73	A
	2.5+3.5+3.5	9.5	1.84+2.58+2.58 (2.20-8.00)	7.00	2180 (420-2960)	10.0	9.6	9.2	3.21	A	2.41+3.05+3.05 (2.40-9.50)	8.50	2290 (430-2600)	10.5	10.1	9.6	3.71	A
	2.5+3.5+5	11	1.59+2.23+3.18 (2.20-8.00)	7.00	2150 (420-2960)	9.9	9.4	9.0	3.26	A	2.04+2.57+3.89 (2.40-9.50)	8.50	2280 (430-2600)	10.5	10.0	9.6	3.73	A
	3.5+3.5+3.5	10.5	2.33+2.33+2.33 (2.20-8.00)	7.00	2180 (420-2960)	10.0	9.6	9.2	3.21	A	2.83+2.83+2.83 (2.40-9.50)	8.50	2280 (430-2600)	10.5	10.0	9.6	3.73	A
FOUR UNITS	1.2+1.2+1.2+1.2	4.8	1.2+1.2+1.2+1.2 (2.20-5.40)	4.80	1420 (200-1660)	6.5	6.2	6.0	3.38	A	1.8+1.8+1.8+1.8 (2.60-9.50)	7.20	1950 (460-2420)	9.0	8.6	8.2	3.69	A
	1.2+1.2+1.2+1.8	5.4	1.2+1.2+1.2+1.8 (2.20-5.90)	5.40	1650 (420-2010)	7.6	7.2	6.9	3.27	A	1.8+1.8+1.8+2.5 (2.60-9.50)	7.90	2180 (460-2520)	10.0	9.6	9.2	3.62	A
	1.2+1.2+1.2+2.5	6.1	1.2+1.2+1.2+2.5 (2.20-6.70)	6.10	1890 (420-2010)	8.7	8.3	8.0	3.23	A	1.74+1.74+1.74+3.28 (2.60-9.50)	8.50	2200 (480-2580)	10.1	9.7	9.3	3.86	A
	1.2+1.2+1.2+3.5	7.1	1.2+1.2+1.2+3.45 (2.40-7.90)	7.00	2110 (450-2650)	9.7	9.3	8.9	3.32	A	1.58+1.58+1.58+3.77 (2.60-9.50)	8.50	2200 (480-2580)	10.1	9.7	9.3	3.86	A
	1.2+1.2+1.2+5.0	8.6	0.98+0.98+0.98+4.07 (2.40-8.50)	7.00	2110 (450-2650)	9.7	9.3	8.9	3.32	A	1.26+1.29+1.29+4.64 (2.60-9.50)	8.50	2200 (480-2580)	10.1	9.7	9.3	3.86	A
	1.2+1.2+1.8+1.8	6.0	1.2+1.2+1.8+1.8 (2.20-6.70)	6.00	1850 (420-2010)	8.5	8.1	7.8	3.24	A	1.78+1.78+2.47+2.47 (2.60-9.50)	8.50	2200 (480-2580)	10.1	9.7	9.3	3.86	A
	1.2+1.2+1.8+2.5	6.7	1.2+1.2+1.8+2.5 (2.40-7.50)	6.70	2010 (420-2310)	9.2	8.8	8.5	3.33	A	1.61+1.61+2.24+3.04 (2.60-9.50)	8.50	2200 (480-2580)	10.1	9.7	9.3	3.86	A
	1.2+1.2+1.8+3.5	7.7	1.09+1.09+1.64+3.18 (2.40-8.30)	7.00	2110 (450-2650)	9.7	9.3	8.9	3.32	A	1.47+1.47+2.04+3.51 (2.60-9.50)	8.50	2200 (480-2580)	10.1	9.7	9.3	3.86	A
	1.2+1.2+1.8+5	9.2	0.91+0.91+1.37+3.80 (2.40-8.50)	7.00	2110 (450-2650)	9.7	9.3	8.9	3.32	A	1.21+1.21+1.69+4.38 (2.60-9.50)	8.50	2200 (480-2580)	10.1	9.7	9.3	3.86	A
	1.2+1.2+2.5+2.5	7.4	1.14+1.14+2.36+2.36 (2.40-7.90)	7.00	2110 (450-2650)	9.7	9.3	8.9	3.32	A	1.47+1.47+2.78+2.78 (2.60-9.50)	8.50	2200 (480-2580)	10.1	9.7	9.3	3.86	A
	1.2+1.2+2.5+3.5	8.4	1.00+1.00+2.08+2.92 (2.40-8.50)	7.00	2110 (450-2650)	9.7	9.3	8.9	3.32	A	1.35+1.35+2.56+3.23 (2.60-9.50)	8.50	2200 (480-2580)	10.1	9.7	9.3	3.86	A
	1.2+1.2+2.5+5	9.9	0.85+0.85+1.77+3.54 (2.40-8.50)	7.00	2110 (450-2650)	9.7	9.3	8.9	3.32	A	1.13+1.13+2.14+4.09 (2.60-9.50)	8.50	2180 (460-2520)	10.0	9.6	9.2	3.90	A
	1.2+1.2+3.5+3.5	9.4	0.89+0.89+2.61+2.61 (2.40-8.50)	7.00	2110 (450-2650)	9.7	9.3	8.9	3.32	A	1.25+1.25+3.00+3.00 (2.60-9.50)	8.50	2200 (480-2580)	10.1	9.7	9.3	3.86	A
	1.2+1.2+3.5+5	10.9	0.77+0.77+2.25+3.21 (2.40-8.80)	7.00	2110 (450-3020)	9.7	9.3	8.9	3.32	A	1.06+1.06+2.54+3.84 (2.60-9.50)	8.50	2180 (460-2520)	10.0	9.6	9.2	3.90	A
	1.2+1.8+1.8+1.8	6.6	1.2+1.8+1.8+1.8 (2.40-7.50)	6.60	2010 (420-2310)	9.2	8.8	8.5	3.28	A	1.65+2.20+2.20+2.20 (2.60-9.50)	8.50	2200 (480-2580)	10.1	9.7	9.3	3.86	A
	1.2+1.8+1.8+2.5	7.3	1.15+1.73+1.73+2.40 (2.40-7.90)	7.00	2110 (450-2650)	9.7	9.3	8.9	3.32	A	1.50+2.08+2.08+2.83 (2.60-9.50)	8.50	2200 (480-2580)	10.1	9.7	9.3	3.86	A

	POSSIBLE COMBINATIONS TO OPERATE	COOLING									HEATING							
		TOTAL (kW)	CAPACITY RATING (kW) (RANGE)	OUTDOOR UNIT					EER	Class	CAPACITY RATING (kW) (RANGE)	OUTDOOR UNIT					COP	Class
				TOTAL	TOTAL INPUT (W)	AMPERE (A)						TOTAL	TOTAL INPUT (W)	AMPERE (A)				
						220V	230V	240V						220V	230V	240V		
FOUR UNITS	1.2+1.8+1.8+3.5	8.3	1.01+1.52+1.52+2.95 (2.40-8.50)	7.00	2110 (450-2650)	9.7	9.3	8.9	3.32	A	1.38+1.91+1.91+3.29 (2.60-9.50)	8.50	2200 (480-2580)	10.1	9.7	9.3	3.86	A
	1.2+1.8+1.8+5	9.8	0.86+1.29+1.29+3.57 (2.40-8.50)	7.00	2110 (450-2650)	9.7	9.3	8.9	3.32	A	1.15+1.60+1.60+4.15 (2.60-9.50)	8.50	2180 (460-2520)	10.0	9.6	9.2	3.90	A
	1.2+1.8+2.5+2.5	8.0	1.05+1.58+2.19+2.19 (2.40-8.50)	7.00	2110 (450-2650)	9.7	9.3	8.9	3.32	A	1.38+1.91+2.60+2.60 (2.60-9.50)	8.50	2200 (480-2580)	10.1	9.7	9.3	3.86	A
	1.2+1.8+2.5+3.5	9.0	0.93+1.40+1.94+2.72 (2.40-8.50)	7.00	2110 (450-2650)	9.7	9.3	8.9	3.32	A	1.28+1.77+2.41+3.05 (2.60-9.50)	8.50	2200 (480-2580)	10.1	9.7	9.3	3.86	A
	1.2+1.8+2.5+5	10.5	0.80+1.20+1.67+3.33 (2.40-8.80)	7.00	2110 (450-3020)	9.7	9.3	8.9	3.32	A	1.08+1.50+2.04+3.89 (2.60-9.50)	8.50	2180 (460-2520)	10.0	9.6	9.2	3.90	A
	1.2+1.8+3.5+3.5	10.0	0.84+1.26+2.45+2.45 (2.40-8.80)	7.00	2110 (450-3020)	9.7	9.3	8.9	3.32	A	1.19+1.65+2.83+2.83 (2.60-9.50)	8.50	2200 (480-2580)	10.1	9.7	9.3	3.86	A
	1.2+2.5+2.5+2.5	8.7	0.97+2.01+2.01+2.01 (2.40-8.50)	7.00	2110 (450-2650)	9.7	9.3	8.9	3.32	A	1.28+2.41+2.41+2.41 (2.60-9.50)	8.50	2200 (480-2580)	10.1	9.7	9.3	3.86	A
	1.2+2.5+2.5+3.5	9.7	0.87+1.80+1.80+2.53 (2.40-8.50)	7.00	2110 (450-2650)	9.7	9.3	8.9	3.32	A	1.19+2.24+2.24+2.83 (2.60-9.50)	8.50	2200 (480-2580)	10.1	9.7	9.3	3.86	A
	1.2+2.5+3.5+3.5	10.7	0.79+1.64+2.29+2.29 (2.40-8.80)	7.00	2110 (450-3020)	9.7	9.3	8.9	3.32	A	1.11+2.09+2.65+2.68 (2.60-9.50)	8.50	2180 (460-2520)	10.0	9.6	9.2	3.90	A
	1.8+1.8+1.8+1.8	7.2	1.75+1.75+1.75+1.75 (2.40-7.90)	7.00	2110 (450-2870)	9.7	9.3	8.9	3.32	A	2.13+2.13+2.13+2.13 (2.60-9.50)	8.50	2120 (480-2580)	9.7	9.3	8.9	4.01	A
	1.8+1.8+1.8+2.5	7.9	1.59+1.59+1.59+2.22 (2.40-8.30)	7.00	2110 (450-3020)	9.7	9.3	8.9	3.32	A	1.95+1.95+1.95+2.65 (2.60-9.50)	8.50	2120 (480-2580)	9.7	9.3	8.9	4.01	A
	1.8+1.8+1.8+3.5	8.9	1.42+1.42+1.42+2.75 (2.40-8.50)	7.00	2110 (450-3090)	9.7	9.3	8.9	3.32	A	1.80+1.80+1.80+3.10 (2.60-9.50)	8.50	2120 (460-2520)	9.7	9.3	8.9	4.01	A
	1.8+1.8+1.8+5	10.4	1.21+1.21+1.21+3.37 (2.40-8.80)	7.00	2110 (450-3200)	9.7	9.3	8.9	3.32	A	1.52+1.52+1.52+3.95 (2.60-9.50)	8.50	2110 (460-2520)	9.7	9.3	8.9	4.03	A
	1.8+1.8+2.5+2.5	8.6	1.47+1.47+2.03+2.03 (2.40-8.50)	7.00	2110 (450-3090)	9.7	9.3	8.9	3.32	A	1.80+1.80+2.45+2.45 (2.60-9.50)	8.50	2120 (460-2520)	9.7	9.3	8.9	4.01	A
	1.8+1.8+2.5+3.5	9.6	1.31+1.31+1.82+2.55 (2.40-8.50)	7.00	2110 (450-3090)	9.7	9.3	8.9	3.32	A	1.67+1.67+2.28+2.88 (2.60-9.50)	8.50	2120 (460-2520)	9.7	9.3	8.9	4.01	A
	1.8+1.8+3.5+3.5	10.6	1.19+1.19+2.31+2.31 (2.40-8.80)	7.00	2110 (450-3200)	9.7	9.3	8.9	3.32	A	1.56+1.56+2.69+2.69 (2.60-9.50)	8.50	2110 (460-2520)	9.7	9.3	8.9	4.03	A
	1.8+2.5+2.5+2.5	9.3	1.35+1.88+1.88+1.88 (2.40-8.50)	7.00	2110 (450-3090)	9.7	9.3	8.9	3.32	A	1.67+2.28+2.28+2.28 (2.60-9.50)	8.50	2120 (460-2520)	9.7	9.3	8.9	4.01	A
	1.8+2.5+2.5+3.5	10.3	1.22+1.70+1.70+2.38 (2.40-8.80)	7.00	2110 (450-3200)	9.7	9.3	8.9	3.32	A	1.56+2.13+2.13+2.69 (2.60-9.50)	8.50	2110 (460-2520)	9.7	9.3	8.9	4.03	A
	2.5+2.5+2.5+2.5	10.0	1.75+1.75+1.75+1.75 (2.40-8.80)	7.00	2110 (450-3200)	9.7	9.3	8.9	3.32	A	2.13+2.13+2.13+2.13 (2.60-9.50)	8.50	2110 (460-2520)	9.7	9.3	8.9	4.03	A
	2.5+2.5+2.5+3.5	11.0	1.59+1.59+1.59+2.23 (2.40-8.80)	7.00	2110 (450-3200)	9.7	9.3	8.9	3.32	A	1.99+1.99+1.99+2.52 (2.60-9.50)	8.50	2110 (460-2520)	9.7	9.3	8.9	4.03	A

Indoor unit model	Nominal cooling capacity (kW)	Capacity (kW) at single unit operation		Suitable room size (m^2) At single unit operation	
		Cooling	Heating	Cooling	Heating
RAK-18QXA	1.8	1.00-2.50	1.10-3.20	8-12	10-13
RAK-25QXA	2.5	0.90-3.10	0.90-4.40	11-17	14-18
RAK-25QXA	3.5	0.90-4.00	0.90-5.00	16-24	17-22
RAK-50QXA	5.0	0.90-5.20	0.90-7.50	23-34	23-29
RAK-18QPA	1.8	1.00-2.50	1.10-3.20	8-12	10-13
RAK-25QPA	2.5	1.00-3.10	1.10-4.40	11-17	14-18
RAK-35QPA	3.5	1.00-4.00	1.10-5.00	16-24	17-22
RAK-50QPA	5.0	1.00-5.60	1.10-7.20	23-34	23-29
RAI-25RPA	2.5	1.00-3.10	1.10-4.40	11-17	14-18
RAI-35RPA	3.5	1.00-4.00	1.10-5.00	18-28	22-27
RAI-50RPA	5.0	1.00-5.60	1.10-7.20	23-34	23-29
RAD-18RPA	1.8	1.00-2.50	1.10-3.20	8-12	10-13
RAD-25RPA	2.5	1.00-3.10	1.10-4.40	11-17	14-18
RAD-35RPA	3.5	1.00-4.00	1.10-5.00	18-28	22-27
RAD-50RPA	5.0	1.00-5.60	1.10-7.20	23-34	23-29
RAF-25QXA	2.5	0.90-3.10	0.90-4.40	11-17	14-18
RAF-35QXA	3.5	0.90-4.00	0.90-5.00	16-24	17-22
RAF-50QXA	5.0	0.90-5.20	0.90-8.10	23-34	23-29
RAF-25RPA	2.5	0.90-3.10	0.90-4.40	11-17	14-18
RAF-35RPA	3.5	0.90-4.00	0.9-5.00	16-24	17-22
RAF-50RPA	5.0	1.90-5.20	2.20-7.30	23-34	23-29

*Two or three indoor units can be installed with one outdoor unit.
*One-unit values are for one unit operation with two indoor connected.
*Total nominal cooling capacity should not be more than 11.0kW.

4.6.7. RAM-90NP5A

Whichever indoor units are installed, cooling and heating capacity depends on how many and which indoor units are operating at the same time.

	POSSIBLE COMBINATIONS TO OPERATE	COOLING									HEATING							
		TOTAL (kW)	CAPACITY RATING (kW) (RANGE)	OUTDOOR UNIT					EER	Class	CAPACITY RATING (kW)	OUTDOOR UNIT					COP	Class
				TOTAL	TOTAL INPUT (W)	AMPERE(A)						TOTAL	TOTAL INPUT (W)	AMPERE (A)				
						220V	230V	240V						220V	230V	240V		
ONE UNIT	1.2	1.2	1.20	1.20	350	1.6	1.5	1.5	3.43	A	1.80	1.80	480	2.20	2.11	2.02	3.75	A
			TBA		TBA						TBA		TBA					
	1.8	1.8	1.80	1.80	500	2.3	2.2	2.1	3.60	A	2.50	2.50	780	3.58	3.43	3.28	3.21	C
			(1.70-2.00)		(320-610)						(2.00-3.0)		(360-920)					
	2.5	2.5	2.50	2.50	700	3.2	3.1	2.9	3.57	A	3.40	3.40	1140	5.23	5.01	4.80	2.98	D
			(1.70-2.80)		(320-860)						(2.00-4.0)		(360-1340)					
	3.5	3.5	3.50	3.50	1040	4.8	4.6	4.4	3.37	A	4.30	4.30	1420	6.52	6.24	5.98	3.03	D
			(1.70-3.90)		(320-1270)						(2.00-5.20)		(360-1720)					
	5	5.0	5.00	5.00	1540	7.1	6.8	6.5	3.25	A	6.50	6.50	2300	10.56	10.10	9.68	2.83	D
			(1.70-5.50)		(320-1860)						(2.00-7.30)		(360-2580)					
TWO UNITS	1.2+1.2	2.4	1.2+1.2	2.40	560	2.6	2.5	2.4	4.29	A	1.8+1.8	3.60	840	3.86	3.69	3.54	4.29	A
			TBA		TBA						TBA		TBA					
	1.2+1.8	3.0	1.2+1.8	3.00	700	3.2	3.1	2.9	4.29	A	1.8+2.5	4.30	1180	5.42	5.18	4.97	3.64	A
			TBA		TBA						TBA		TBA					
	1.2+2.5	3.7	1.2+2.5	3.70	750	3.4	3.3	3.2	4.93	A	1.8+3.4	5.20	1280	5.88	5.62	5.39	4.06	A
			TBA		TBA						TBA		TBA					
	1.2+3.5	4.7	1.2+3.5	4.70	1050	4.8	4.6	4.4	4.48	A	1.8+4.3	6.10	1550	7.12	6.81	6.52	3.94	A
			TBA		TBA						TBA		TBA					
	1.2+5	6.2	1.2+5	6.20	2200	10.1	9.7	9.3	2.82	C	1.8+6.5	8.30	2420	11.11	10.63	10.19	3.43	B
			TBA		TBA						TBA		TBA					
	1.8+1.8	3.6	1.8+1.8	3.60	710	3.3	3.1	3.0	5.07	A	2.5+2.5	5.00	1240	5.69	5.45	5.22	4.03	A
			(2.40-4.00)		(450-860)						(2.70-6.90)		(480-1710)					
	1.8+2.5	4.3	1.8+2.5	4.30	1000	4.6	4.4	4.2	4.30	A	2.5+3.4	5.90	1530	7.02	6.72	6.44	3.86	A
			(2.00-4.70)		(450-1190)						(2.7-7.7)		(480-1990)					
	1.8+3.5	5.3	1.8+3.5	5.30	1590	7.3	7.0	6.7	3.33	A	2.5+4.3	6.80	1870	8.59	8.21	7.87	3.64	A
			(2.40-5.80)		(450-1900)						(2.7-8.5)		(480-2320)					
	1.8+5	6.8	1.8+5.0	6.80	2470	11.3	10.8	10.4	2.75	D	2.39+6.21	8.60	2470	11.34	10.85	10.40	3.48	B
			(2.40-7.50)		(450-2970)						(2.7-10.0)		(480-2880)					
	2.5+2.5	5.0	2.5+2.5	5.00	1370	6.3	6.0	5.8	3.65	A	3.4+3.4	6.80	1810	8.31	7.95	7.62	3.76	A
			(2.40-5.50)		(450-1640)						2.7-8.5		480-2250					
	2.5+3.5	6.0	2.5+3.5	6.00	2000	9.2	8.8	8.4	3.00	B	3.4+4.3	7.70	2160	9.92	9.49	9.09	3.56	B
			(2.40-6.60)		(450-2400)						2.7-9.2		480-2590					
	2.5+5	7.5	2.5+5.0	7.50	2880	13.2	12.6	12.1	2.60	D	3.16+6.04	9.20	2720	12.49	11.95	11.45	3.38	C
			(2.40-8.30)		(450-3470)						2.7-10.5		480-3110					
	3.5+3.5	7.0	3.5+3.5	7.00	2490	11.4	10.9	10.5	2.81	C	4.3+4.3	8.60	2460	11.29	10.80	10.35	3.50	B
			(2.40-7.70)		(450-2990)						2.70-10.0		480-2860					

POSSIBLE COMBINATIONS TO OPERATE		COOLING									HEATING							
		TOTAL (kW)	CAPACITY RATING (kW)		OUTDOOR UNIT				EER	Class	CAPACITY RATING (kW)		OUTDOOR UNIT				COP	Class
				TOTAL	TOTAL INPUT (W)	AMPERE(A) 220 V	230 V	240V				TOTAL	TOTAL INPUT (W)	AMPERE(A) 220 V	230V	240 V		
TWO UNITS	3.5+5	8.5	3.3+4.7	8.00	2730	13.3	12.7	12.2	2.93	C	3.86+5.84	9.70	2940	13.50	12.91	12.37	3.30	C
			(2.40-8.80)		(450-3270)						2.7-11.0		480-3320					
	5+5	10.0	4.2+4.2	8.40	2900	13.5	12.9	12.3	2.90	C	5.1+5.1	10.20	2860	13.13	12.56	12.04	3.57	B
			(2.40-9.20)		(450-3460)						2.70-11.40		480-3200					
THREE UNITS	1.2+1.2+1.2	3.6	1.2+1.2+1.2	3.60	730	3.4	3.2	3.1	4.93	A	1.8+1.8+1.8	5.40	1320	6.06	5.80	5.56	4.09	A
			TBA		TBA						TBA		TBA					
	1.2+1.2+1.8	4.2	1.2+1.2+1.8	4.20	1000	4.6	4.4	4.2	4.20	A	1.8+1.8+2.5	6.10	1580	7.25	6.94	6.65	3.86	A
			TBA		TBA						TBA		TBA					
	1.2+1.2+2.5	4.9	1.2+1.2+2.5	4.90	1320	6.1	5.8	5.6	3.71	A	1.8+1.8+3.4	7.00	1900	8.72	8.34	8.00	3.68	A
			TBA		TBA						TBA		TBA					
	1.2+1.2+3.5	5.9	1.2+1.2+3.5	5.90	1750	8.0	7.7	7.4	3.37	A	1.8+1.8+4.3	7.90	2180	10.01	9.57	9.18	3.62	A
			TBA		TBA						TBA		TBA					
	1.2+1.2+5	7.4	1.2+1.2+5	7.40	2100	9.6	9.2	8.8	3.52	A	1.8+1.8+6.5	10.10	2730	12.53	11.99	11.49	3.70	A
			TBA		TBA						TBA		TBA					
	1.2+1.8+1.8	4.8	1.2+1.8+1.8	4.80	1350	6.2	5.9	5.7	3.56	A	1.8+2.5+2.5	6.80	1880	8.63	8.26	7.91	3.62	A
			TBA		TBA						TBA		TBA					
	1.2+1.8+2.5	5.5	1.2+1.8+2.5	5.50	1490	6.8	6.5	6.3	3.69	A	1.8+2.5+3.4	7.70	2130	9.78	9.35	8.96	3.62	A
			TBA		TBA						TBA		TBA					
	1.2+1.8+3.5	6.5	1.2+1.8+3.5	6.50	1850	8.5	8.1	7.8	3.51	A	1.8+2.5+4.3	8.60	2350	10.79	10.32	9.89	3.66	A
			TBA		TBA						TBA		TBA					
	1.2+1.8+5	8.0	1.2+1.8+5	8.00	2230	10.2	9.8	9.4	3.59	A	1.8+2.5+6.5	10.80	2850	13.09	12.52	11.99	3.79	A
			TBA		TBA						TBA		TBA					
	1.2+2.5+2.5	6.2	1.2+2.5+2.5	6.20	1800	8.3	7.9	7.6	3.44	A	1.8+3.4+3.4	8.60	2350	10.79	10.32	9.89	3.66	A
			TBA		TBA						TBA		TBA					
	1.2+2.5+3.5	7.2	1.2+2.5+3.5	7.20	1900	8.7	8.3	8.0	3.79	A	1.8+3.4+4.3	9.50	2620	12.03	11.51	11.03	3.63	A
			TBA		TBA						TBA		TBA					
	1.2+2.5+5	8.7	1.2+2.5+5	8.70	2680	12.3	11.8	11.3	3.25	A	1.7+3.2+6.1	11.00	2890	13.27	12.69	12.16	3.81	A
			TBA		TBA						TBA		TBA					
	1.2+3.5+3.5	8.2	1.2+3.5+3.5	8.20	2560	11.8	11.2	10.8	3.20	A	1.8+4.3+4.3	10.40	2990	13.73	13.13	12.58	3.48	B
			TBA		TBA						TBA		TBA					
	1.2+3.5+5	9.7	1.1+3.3+4.6	9.00	2740	12.6	12.0	11.5	3.28	A	1.6+3.8+5.7	11.00	2890	13.27	12.69	12.16	3.81	A
			TBA		TBA						TBA		TBA					
	1.2+5+5	11.2	1.0+4.0+4.0	9.00	2740	12.6	12.0	11.5	3.28	A	1.3+4.8+4.8	11.00	2890	13.27	12.69	12.16	3.81	A
			TBA		TBA						TBA		TBA					
	1.8+1.8+1.8	5.4	1.8+1.8+1.8	5.40	1480	6.8	6.5	6.2	3.65	A	2.5+2.5+2.5	7.50	2020	9.27	8.87	8.50	3.71	A
			(2.70-5.90)		(510-1780)						2.9-9.1		520-2440					
	1.8+1.8+2.5	6.1	1.8+1.8+2.5	6.10	1780	8.2	7.8	7.5	3.43	A	2.38+2.38+3.24	8.00	2210	10.15	9.71	9.30	3.62	A
			(2.70-6.70)		(510-2150)						2.9-9.5		520-2620					
	1.8+1.8+3.5	7.1	1.8+1.8+3.5	7.10	1910	8.8	8.4	8.0	3.72	A	2.37+2.37+4.06	8.80	2370	10.88	10.41	9.97	3.71	A
			(2.70-7.80)		(510-2310)						2.9-10.2		520-2740					
	1.8+1.8+5	8.6	1.8+1.8+5.0	8.60	2680	12.2	11.6	11.2	3.21	A	2.2+2.2+5.7	10.10	2730	12.53	11.99	11.49	3.70	A
			(2.70-9.50)		(510-3260)						2.9-11.3		520-3060					
	1.8+2.5+2.5	6.8	1.8+2.5+2.5	6.80	1860	8.5	8.2	7.8	3.66	A	2.3+3.15+3.15	8.60	2370	10.88	10.41	9.97	3.63	A
			(2.70-7.50)		(510-2260)						2.9-10.0		520-2760					

	POSSIBLE COMBINATIONS TO OPERATE	COOLING									HEATING							
		TOTAL (kW)	CAPACITY RATING (kW)		OUTDOOR UNIT				EER	Class	CAPACITY RATING (kW)		OUTDOOR UNIT				COP	Class
				TOTAL	TOTAL INPUT (W)	AMPERE(A) 220 V	230 V	240V				TOTAL	TOTAL INPUT (W)	AMPERE(A) 220 V	230V	240 V		
THREE UNITS	1.8+2.5+3.5	7.8	1.8+2.5+3.5	7.80	2190	10.1	9.6	9.2	3.56	A	2.3+3.13+3.97	9.40	2530	11.62	11.11	10.65	3.72	A
			(2.7-8.6)		(510-2660)						2.90-10.7		520-2880					
	1.8+2.5+5	9.3	1.66+2.26+4.58	7.80	2700	10.1	9.6	9.2	3.33	A	2.10+2.85+5.45	10.40	2890	11.62	11.11	10.65	3.60	B
			(2.70-9.90)		(510-3270)						2.9-11.6		520-3220					
	1.8+3.5+3.5	8.8	1.74+3.38+3.38	8.50	2690	11.7	11.2	10.7	3.27	A	2.34+4.03+4.03	10.40	2750	13.27	12.69	12.16	3.78	A
			(2.70-9.70)		(510-3260)						2.9-11.6		520-3060					
	1.8+3.5+5	10.3	1.47+2.88+4.16	8.50	2740	11.9	11.4	10.9	3.28	A	1.95+3.36+5.09	10.40	2990	12.63	12.08	11.57	3.48	B
			(2.70-9.90)		(510-3320)						2.9-11.6		520-3330					
	1.8+5+5	11.8	1.31+3.60+3.860	8.50	2740	11.9	11.4	10.9	3.28	A	1.68+4.36+4.36	10.40	2990	13.73	13.13	12.58	3.48	B
			(2.70-9.90)		(510-3320)						2.9-11.6		520-3330					
	2.5+2.5+2.5	7.5	2.5+2.5+2.5	8.50	2120	11.9	11.4	10.9	3.54	A	3.00+3.00+3.00	9.00	2540	13.73	13.13	12.58	3.54	B
			(2.70-8.30)		(510-2580)						2.9-10.4		520-2920					
	2.5+2.5+3.5	8.5	2.5+2.5+3.5	8.50	2560	11.8	11.2	10.8	3.32	A	3.06+3.06+3.88	10.00	2730	12.53	11.99	11.49	3.66	A
			(2.70-9.4)		(510-3110)						2.9-11.2		520-3070					
	2.5+2.5+5	10.0	2.25+2.25+4.50	9.00	2780	12.0	11.5	11.0	3.24	A	2.66+2.66+5.08	10.40	2990	13.73	13.13	12.58	3.48	B
			(2.70-9.90)		(510-3360)						2.9-11.6		520-3330					
	2.5+3.5+3.5	9.5	2.23+3.13+3.13	8.50	2750	11.9	11.4	10.9	3.27	A	2.95+3.73+3.73	10.40	2890	13.27	12.69	12.16	3.60	B
			(2.70-9.90)		(510-3330)						2.9-11.6		520-3220					
	2.5+3.5+5	11.0	1.93+2.69+3.87	8.50	2770	12.0	11.5	11.0	3.25	A	2.49+3.14+4.77	10.40	2990	13.73	13.13	12.58	3.48	B
			(2.70-9.90)		(510-3350)						2.9-11.6		520-3330					
	2.5+5+5	12.5	1.7+3.4+3.4	8.50	2780	12.0	11.5	11.0	3.24	A	2.18+4.16+4.16	10.50	2990	13.73	13.13	12.58	3.51	B
			(2.70-9.90)		(510-3360)						2.9-11.7		520-3320					
	3.5+3.5+3.5	10.5	2.83+2.83+2.83	8.50	2740	11.9	11.4	10.9	3.28	A	3.47+3.47+3.47	10.40	2990	13.73	13.13	12.58	3.48	B
			(2.70-9.90)		(510-3320)						2.9-11.6		520-3330					
	3.5+3.5+5	12.0	2.50+2.50+3.49	8.50	2780	12.0	11.5	11.0	3.24	A	2.99+3.01+4.47	10.50	2990	13.73	13.13	12.58	3.51	B
			(2.70-9.90)		(510-3360)						2.9-11.7		520-3320					
	3.5+5+5	13.5	2.17+3.17+3.17	8.50	2620	12.0	11.5	11.0	3.24	A	2.60+3.95+3.95	10.50	2990	13.73	13.13	12.58	3.51	B
			(2.70-9.90)		(510-3360)						2.9-11.7		520-3320					
	5+5+5	15.0	3.00+3.00+3.00	8.50	2620	12.0	11.5	11.0	3.16	B	3.67+3.67+3.67	11.00	2890	13.73	13.13	12.58	3.81	A
			(2.70-9.90)		(510-3450)						2.9-12.1		520-3180					
FOUR UNITS	1.2+1.2+1.2+1.2	4.8	1.2+1.2+1.2+1.2	4.80	1350	6.2	5.9	5.7	3.56	A	1.8+1.8+1.8+1.8	7.20	2000	9.18	8.78	8.42	3.60	A
			TBA		TBA						TBA		TBA					
	1.2+1.2+1.2+1.8	5.4	1.2+1.2+1.2+1.8	5.40	1480	6.8	6.5	6.2	3.65	A	1.8+1.8+1.8+2.5	7.90	2200	10.10	9.66	9.26	3.59	B
			TBA		TBA						TBA		TBA					
	1.2+1.2+1.2+2.5	6.1	1.2+1.2+1.2+2.5	6.10	1780	8.2	7.8	7.5	3.43	A	1.8+1.8+1.8+3.4	8.80	2390	10.97	10.50	10.06	3.68	A
			TBA		TBA						TBA		TBA					
	1.2+1.2+1.2+3.5	7.1	1.2+1.2+1.2+3.5	7.10	1910	8.8	8.4	8.0	3.72	A	1.8+1.8+1.8+4.3	9.70	2550	11.71	11.20	10.73	3.80	A
			TBA		TBA						TBA		TBA					
	1.2+1.2+1.2+5	8.6	1.2+1.2+1.2+5	8.50	2680	12.2	11.6	11.2	3.21	A	1.66+1.66+1.66+6.01	11.00	2890	13.27	12.69	12.16	3.81	A
			TBA		TBA						TBA		TBA					

	POSSIBLE COMBINATIONS TO OPERATE	COOLING								HEATING						
		TOTAL (kW)	CAPACITY RATING (kW)		OUTDOOR UNIT			EER	Class	CAPACITY RATING (kW)		OUTDOOR UNIT			COP	Class
					TOTAL INPUT (W)	AMPERE (A)						TOTAL INPUT (W)	AMPERE (A)			
				TOTAL		220V	230V	240V			TOTAL		220V	230V	240V	
	1.2+1.2+1.8+1.8	6.0	1.2+1.2+1.8+1.8	6.00	1750	8.0	7.7	7.4	3.43	A	1.8+1.8+2.5+2.5	8.60	2380	10.93	10.45	10.02	3.61	A
			TBA		TBA						TBA		TBA					
	1.2+1.2+1.8+2.5	6.7	1.2+1.2+1.8+2.5	6.70	1850	8.5	8.1	7.8	3.62	A	1.8+1.8+2.5+3.4	9.50	2530	11.62	11.11	10.65	3.75	A
			TBA		TBA						TBA		TBA					
FOUR UNITS	1.2+1.2+1.8+3.5	7.7	1.2+1.2+1.8+3.5	7.70	2180	10.0	9.6	9.2	3.53	A	1.8+1.8+2.5+4.3	10.40	2480	11.39	10.89	10.44	4.19	A
			TBA		TBA						TBA		TBA					
	1.2+1.2+1.8+5	9.2	1.11+1.11+1.66+4.62	8.50	2600	11.9	11.4	10.9	3.27	A	1.57+1.57+2.18+5.67	11.00	2890	13.27	12.69	12.16	3.81	A
			TBA		TBA						TBA		TBA					
	1.2+1.2+2.5+2.5	7.4	1.2+1.2+2.5+2.5	7.40	2150	9.9	9.4	9.0	3.44	A	1.8+1.8+3.4+3.4	10.40	2480	11.39	10.89	10.44	4.19	A
			TBA		TBA						TBA		TBA					
	1.2+1.2+2.5+3.5	8.4	1.2+1.2+2.5+3.5	8.40	2600	11.9	11.4	10.9	3.23	A	1.75+1.75+3.31+4.19	11.00	2890	13.27	12.69	12.16	3.81	A
			TBA		TBA						TBA		TBA					
	1.2+1.2+2.5+5	9.9	1.0+1.0+2.2+4.3	8.50	2600	11.9	11.4	10.9	3.27	A	1.47+1.47+2.77+5.3	11.00	2890	13.27	12.69	12.16	3.81	A
			TBA		TBA						TBA		TBA					
	1.2+1.2+3.5+3.5	9.4	1.1+1.1+3.2+3.2	8.50	2600	11.9	11.4	10.9	3.27	A	1.62+1.62+3.88+3.88	11.00	2890	13.27	12.69	12.16	3.81	A
			TBA		TBA						TBA		TBA					
	1.2+1.2+3.5+5	10.9	0.9+0.9+2.7+3.9	8.50	2600	11.9	11.4	10.9	3.27	A	1.38+1.38+3.28+4.97	11.00	2890	13.27	12.69	12.16	3.81	A
			TBA		TBA						TBA		TBA					
	1.2+1.2+5+5	12.4	0.8+0.8+3.4+3.4	8.50	2600	11.9	11.4	10.9	3.27	A	1.19+1.19+4.30+4.31	11.00	2890	13.27	12.69	12.16	3.81	A
			TBA		TBA						TBA		TBA					
	1.2+1.8+1.8+1.8	6.6	1.2+1.8+1.8+1.8	6.60	1870	8.6	8.2	7.9	3.53	A	1.8+2.5+2.5+2.5	9.30	2520	11.57	11.07	10.61	3.69	A
			TBA		TBA						TBA		TBA					
	1.2+1.8+1.8+2.5	7.3	1.2+1.8+1.8+2.5	7.30	2140	9.8	9.4	9.0	3.41	A	1.8+2.5+2.5+3.4	10.20	2750	12.63	12.08	11.57	3.71	A
			TBA		TBA						TBA		TBA					
	1.2+1.8+1.8+3.5	8.3	1.2+1.8+1.8+3.5	8.30	2550	11.7	11.2	10.7	3.25	A	1.78+2.48+2.48+4.26	11.00	2890	13.27	12.69	12.16	3.81	A
			TBA		TBA						TBA		TBA					
	1.2+1.8+1.8+5	9.8	1.0+1.6+1.6+4.3	8.50	2600	11.9	11.4	10.9	3.27	A	1.49+2.07+2.07+5.38	11.00	2890	13.27	12.69	12.16	3.81	A
			TBA		TBA						TBA		TBA					
	1.2+1.8+2.5+2.5	8.0	1.2+1.8+2.5+2.5	8.00	2740	12.6	12.0	11.5	2.92	C	1.78+2.48+3.37+3.37	11.00	2890	13.27	12.69	12.16	3.81	A
			TBA		TBA						TBA		TBA					
	1.2+1.8+2.5+3.5	9.0	1.2+1.8+2.5+3.5	8.50	2600	11.9	11.4	10.9	3.28	A	1.65+2.29+3.12+3.94	11.00	2890	13.27	12.69	12.16	3.81	A
			TBA		TBA						TBA		TBA					
	1.2+1.8+2.5+5	10.5	1.0+1.5+2.0+4.1	8.50	2600	11.9	11.4	10.9	3.28	A	1.39+1.94+2.63+5.04	11.00	2890	13.27	12.69	12.16	3.81	A
			TBA		TBA						TBA		TBA					

	POSSIBLE COMBINATIONS TO OPERATE	COOLING								HEATING						
		TOTAL (kW)	CAPACITY RATING (kW)	OUTDOOR UNIT				EER	Class	CAPACITY RATING (kW)	OUTDOOR UNIT				COP	Class
				TOTAL	TOTAL INPUT (W)	AMPERE (A) 220V	230V	240V			TOTAL	TOTAL INPUT (W)	AMPERE (A) 220V	230V	240V		
FOUR UNITS	1.2+1.8+3.5+3.5	10.0	1.02+1.53+2.98+2.98	8.50	2600	11.9	11.4	10.9	3.28	A	1.53+2.13+3.67+3.67	11.00	2890	13.27	12.69	12.16	3.81	A
			TBA		TBA						TBA		TBA					
	1.2+1.8+3.5+5	11.5	0.9+1.3+2.6+3.7	8.50	2600	11.9	11.4	10.9	3.28	A	1.31+1.82+3.13+4.74	11.00	2890	13.27	12.69	12.16	3.81	A
			TBA		TBA						TBA		TBA					
	1.2+1.8+5+5	13.0	0.8+1.2+3.3+3.3	8.50	2600	11.9	11.4	10.9	3.28	A	1.14+1.59+4.13+4.13	11.00	2890	13.27	12.69	12.16	3.81	A
			TBA		TBA						TBA		TBA					
	1.2+2.5+2.5+2.5	8.7	1.2+2.4+2.4+2.4	8.50	2610	12.0	11.5	11.0	3.26	A	1.65+3.12+3.12+3.12	11.00	2890	13.27	12.69	12.16	3.81	A
			TBA		TBA						TBA		TBA					
	1.2+2.5+2.5+3.5	9.7	1.1+2.2+2.2+3.1	8.50	2600	11.9	11.4	10.9	3.28	A	1.53+2.9+2.9+3.67	11.00	2890	13.27	12.69	12.16	3.81	A
			TBA		TBA						TBA		TBA					
	1.2+2.5+2.5+5	11.2	0.9+1.9+1.9+3.8	8.50	2600	11.9	11.4	10.9	3.28	A	1.31+2.48+2.48+4.74	11.00	2890	13.27	12.69	12.16	3.81	A
			TBA		TBA						TBA		TBA					
	1.2+2.5+3.5+3.5	10.7	1.0+2.0+2.8+2.8	8.50	2600	11.9	11.4	10.9	3.28	A	1.43+2.71+3.43+3.43	11.00	2890	13.27	12.69	12.16	3.81	A
			TBA		TBA						TBA		TBA					
	1.2+2.5+3.5+5	12.2	0.9+1.8+2.6+3.7	8.50	2600	11.9	11.4	10.9	3.28	A	1.24+2.34+2.96+4.47	11.00	2890	13.27	12.69	12.16	3.81	A
			TBA		TBA						TBA		TBA					
	1.2+2.5+5+5	13.7	0.7+1.6+3.1+3.1	8.50	2600	11.9	11.4	10.9	3.28	A	1.09+2.05+3.93+3.93	11.00	2890	13.27	12.69	12.16	3.81	A
			TBA		TBA						TBA		TBA					
	1.2+3.5+3.5+3.5	11.7	0.9+2.5+2.5+2.6	8.50	2600	11.9	11.4	10.9	3.28	A	1.35+3.22+3.22+3.22	11.00	2890	13.27	12.69	12.16	3.81	A
			TBA		TBA						TBA		TBA					
	1.2+3.5+3.5+5	13.2	0.8+2.3+2.3+3.2	8.50	2600	11.9	11.4	10.9	3.28	A	1.17+2.8+2.8+4.23	11.00	2890	13.27	12.69	12.16	3.81	A
			TBA		TBA						TBA		TBA					
	1.2+3.5+5+5	14.7	0.7+2.0+2.9+2.9	8.50	2600	11.9	11.4	10.9	3.28	A	1.04+2.48+3.74+3.74	11.00	2890	13.27	12.69	12.16	3.81	A
			TBA		TBA						TBA		TBA					
	1.8+1.8+1.8+1.8	7.2	1.80+1.80+1.80+1.80	7.20	1800	8.3	7.9	7.6	4.00	A	2.4+2.4+2.4+2.4	9.60	2400	11.02	10.54	10.10	4.00	A
			(2.90-7.90)		(550-2310)						3.0-10.9		540-2720					
	1.8+1.8+1.8+2.5	7.9	1.80+1.80+1.80+2.5	7.90	2090	9.6	9.2	8.8	3.78	A	2.25+2.25+2.25+3.05	9.80	2700	12.40	11.86	11.36	3.63	A
			(2.90-8.70)		(550-2690)						3.0-11.1		540-3050					
	1.8+1.8+1.8+3.5	8.9	1.72+1.72+1.72+3.34	8.50	2530	11.1	10.6	10.2	3.52	A	2.16+2.16+2.16+3.72	10.20	2700	12.40	11.86	11.36	3.78	A
			(2.90-9.80)		(550-3260)						3.0-11.4		540-3020					
	1.8+1.8+1.8+5	10.4	1.46+1.46+1.46+4.11	8.50	2530	11.0	10.5	10.1	3.56	A	1.82+1.82+1.82+4.74	10.20	2700	12.40	11.86	11.36	3.78	A
			(2.90-9.90)		(550-3260)						3.0-11.4		540-3020					
	1.8+1.8+2.5+2.5	8.6	1.78+1.78+2.47+2.47	8.50	2350	10.7	10.2	9.8	3.66	A	2.12+2.12+2.88+2.88	10.00	2700	12.40	11.86	11.36	3.70	A
			(2.90-9.50)		(550-3040)						3.0-11.2		540-3030					
	1.8+1.8+2.5+3.5	9.6	1.59+1.59+2.21+3.10	8.50	2530	11.0	10.5	10.1	3.56	A	2.01+2.01+2.73+3.45	10.20	2700	12.40	11.86	11.36	3.78	A
			(2.90-9.9)		(550-3260)						3.0-11.4		540-3020					

	POSSIBLE COMBINATIONS TO OPERATE	COOLING								HEATING						
		TOTAL (kW)	CAPACITY RATING (kW)	OUTDOOR UNIT				EER	Class	CAPACITY RATING (kW)	OUTDOOR UNIT				COP	Class
				TOTAL	TOTAL INPUT (W)	AMPERE (A)					TOTAL	TOTAL INPUT (W)	AMPERE (A)			
						220V	230V	240V					220V	230V	240V	
FOUR UNITS	1.8+1.8+2.5+5	11.1	1.37+1.37+1.90+3.88 (2.90-9.9)	8.50	2530 (550-3260)	11.0	10.5	10.1	3.56	A	1.71+1.71+2.33+4.45 3.0-11.4	10.20	2700 540-3020	12.40	11.86	11.36	3.78	A
	1.8+1.8+3.5+3.5	10.6	1.44+1.44+2.81+2.81 (2.90-9.90)	8.50	2530 (550-3260)	11.0	10.5	10.1	3.56	A	1.88+1.88+3.22+3.22 3.0-11.4	10.20	2700 540-3020	12.40	11.86	11.36	3.78	A
	1.8+1.8+3.5+5	12.1	1.27+1.27+2.46+3.49 (2.90-9.90)	8.50	2530 (550-3260)	11.0	10.5	10.1	3.56	A	1.61+1.61+2.78+4.2 3.0-11.4	10.20	2700 540-3020	12.40	11.86	11.36	3.78	A
	1.8+1.8+5+5	13.6	1.14+1.14+3.12+3.12 (2.90-9.90)	8.50	2510 (550-3230)	10.9	10.4	10.0	3.59	A	1.44+1.44+3.76+3.76 3.0-11.6	10.40	2700 540-3010	12.40	11.86	11.36	3.85	A
	1.8+2.5+2.5+2.5	9.3	1.71+2.26+2.26+2.26 (2.90-9.90)	8.50	2530 (550-3260)	11.0	10.5	10.1	3.56	A	2.01+2.73+2.73+2.73 3.0-11.4	10.20	2700 540-3020	12.40	11.86	11.36	3.78	A
	1.8+2.5+2.5+3.5	10.3	1.52+2.08+2.08+2.83 (2.90-9.90)	8.50	2530 (550-3260)	11.0	10.5	10.1	3.56	A	1.88+2.55+2.55+3.22 3.0-11.4	10.20	2700 540-3020	12.40	11.86	11.36	3.78	A
	1.8+2.5+2.5+5	11.8	1.33+1.79+1.79+3.59 (2.90-9.90)	8.50	2530 (550-3260)	11.0	10.5	10.1	3.56	A	1.61+2.19+2.19+4.21 3.0-11.4	10.20	2700 540-3020	12.40	11.86	11.36	3.78	A
	1.8+2.5+3.5+3.5	11.3	1.32+1.89+2.64+2.64 (2.90-9.90)	8.50	2530 (550-3260)	11.0	10.5	10.1	3.56	A	1.75+2.39+3.03+3.03 3.0-11.4	10.20	2700 540-3020	12.40	11.86	11.36	3.78	A
	1.8+2.5+3.5+5	12.8	1.23+1.65+2.31+3.30 (2.90-9.90)	8.50	2530 (550-3260)	11.0	10.5	10.1	3.56	A	1.53+2.08+2.63+3.96 3.0-11.4	10.20	2700 540-3020	12.40	11.86	11.36	3.78	A
	1.8+2.5+5+5	14.3	1.15+1.55+3.15+3.15 (2.90-9.90)	9.00	2510 (550-3230)	10.9	10.0	10.0	3.59	A	1.46+1.98+3.78+3.78 3.0-12.1	11.00	2630 540-2890	12.08	11.55	11.07	4.18	A
	1.8+3.5+3.5+3.5	12.3	1.35+2.55+2.55+2.55 (2.90-9.90)	9.00	2530 (550-3260)	11.0	10.1	10.1	3.56	A	1.65+2.85+2.85+2.85 3.0-11.4	10.20	2700 540-3020	12.40	11.86	11.36	3.78	A
	1.8+3.5+3.5+5	13.8	1.15+2.30+2.30+3.25 (2.90-9.90)	9.00	2530 (550-3260)	11.0	10.1	10.1	3.56	A	1.56+2.69+2.69+4.06 3.0-12.1	11.00	2800 540-3080	12.86	12.30	11.78	3.93	A
	1.8+3.5+5+5	15.3	1.05+2.05+2.95+2.95 (2.90-9.90)	9.00	2510 (550-3230)	10.9	10.0	10.0	3.59	A	1.39+2.39+3.61+3.61 3.0-12.1	11.00	2630 540-2890	12.08	11.55	11.07	4.18	A
	2.5+2.5+2.5+2.5	10.0	2.25+2.25+2.25+2.25 (2.90-9.90)	9.00	2530 (550-3260)	10.9	10.0	10.0	3.56	A	2.55+2.55+2.55+2.55 3.0-11.4	10.20	2700 540-3020	12.40	11.86	11.36	3.78	A
	2.5+2.5+2.5+3.5	11.0	2.05+2.05+2.05+2.85 (2.90-9.90)	9.00	2530 (550-3260)	10.9	10.0	10.0	3.56	A	2.39+2.39+2.39+3.03 3.0-11.4	10.20	2700 540-3020	12.40	11.86	11.36	3.78	A
	2.5+2.5+2.5+5	12.5	1.8+1.8+1.8+3.6 (2.90-9.90)	9.00	2530 (550-3260)	10.9	10.0	10.0	3.56	A	2.12+2.12+2.12+4.04 3.0-11.6	10.40	2700 540-3010	12.40	11.86	11.36	3.85	A
	2.5+2.5+3.5+3.5	12.0	1.88+1.88+2.62+2.62 (2.90-9.90)	9.00	2530 (550-3260)	10.9	10.0	10.0	3.56	A	2.25+2.25+2.85+2.85 3.0-11.4	10.20	2700 540-3020	12.40	11.86	11.36	3.78	A
	2.5+2.5+3.5+5	13.5	1.67+1.67+2.33+3.33 (2.90-9.90)	9.00	2530 (550-3260)	10.9	10.0	10.0	3.56	A	2.01+2.01+2.54+3.84 3.0-11.6	10.40	2700 540-3010	12.40	11.86	11.36	3.85	A

	POSSIBLE COMBINATIONS TO OPERATE	COOLING									HEATING							
		TOTAL (kW)	CAPACITY RATING (kW)	TOTAL	OUTDOOR UNIT TOTAL INPUT (W)	OUTDOOR UNIT AMPERE (A) at 230V			EER	Class	CAPACITY RATING (kW)	TOTAL	OUTDOOR UNIT TOTAL INPUT (W)	OUTDOOR UNIT AMPERE (A) at 230V			COP	Class
FOUR UNITES	2.5+2.5+5+5	15.0	1.50+1.50+3.00+3.00	9.00	2510	10.9	10.0	10.0	3.59	A	1.89+1.89+3.61+3.61	11.00	2630	12.08	11.55	11.07	4.18	A
			(2.90-9.90)		(550-3230)						3.0-12.1		540-2890					
	2.5+3.5+3.5+3.5	13.0	1.74+2.42+2.42+2.42	9.00	2530	11.0	10.1	10.1	3.56	A	2.18+2.74+2.74+2.74	10.40	2700	12.40	11.86	11.36	3.85	A
			(2.90-9.90)		(550-3260)						3.0-11.6		540-3010					
	2.5+3.5+3.5+5	14.5	1.56+2.17+2.17+3.10	9.00	2530	11.0	10.1	10.1	3.56	A	2.02+2.56+2.56+3.86	11.00	2630	12.08	11.55	11.07	4.18	A
			(2.90-9.90)		(550-3260)						3.0-12.1		540-2890					
	3.5+3.5+3.5+3.5	14.0	2.25+2.25+2.25+2.25	9.00	2530	11.0	10.1	10.1	3.56	A	2.75+2.75+2.75+2.75	11.00	2630	12.08	11.55	11.07	4.18	A
			(2.90-9.90)		(550-3260)						3.0-12.1		540-2890					
	3.5+3.5+3.5+5	15.5	2.03+2.03+2.03+2.91	9.00	2530	11.0	10.1	10.1	3.56	A	2.44+2.44+2.44+3.68	11.00	2630	12.08	11.55	11.07	4.18	A
			(2.90-9.90)		(550-3260)						3.0-12.1		540-2890					
	1.2+1.2+1.2+1.2+1.2	6.0	1.2+1.2+1.2+1.2+1.2	6.00	1770	8.1	7.8	7.4	3.39	A	1.8+1.8+1.8+1.8+1.8	9.00	2350	10.79	10.32	9.89	3.83	A
			TBA		TBA						TBA		TBA					
	1.2+1.2+1.2+1.2+1.8	6.6	1.2+1.2+1.2+1.2+1.8	6.60	1850	8.5	8.1	7.8	3.57	A	1.8+1.8+1.8+1.8+2.5	9.70	2360	10.84	10.36	9.93	4.11	A
			TBA		TBA						TBA		TBA					
	1.2+1.2+1.2+1.2+2.5	7.3	1.2+1.2+1.2+1.2+2.5	7.30	1950	9.0	8.6	8.2	3.74	A	1.8+1.8+1.8+1.8+3.4	10.60	2400	11.02	10.54	10.10	4.42	A
			TBA		TBA						TBA		TBA					
	1.2+1.2+1.2+1.2+3.5	8.3	1.2+1.2+1.2+1.2+3.5	8.30	2590	11.9	11.4	10.9	3.20	A	1.72+1.72+1.72+1.72+4.11	11.00	2460	11.29	10.80	10.35	4.47	A
			TBA		TBA						TBA		TBA					
	1.2+1.2+1.2+1.2+5	9.8	1.04+1.04+1.04+1.04+4.34	8.50	2390	11.0	10.5	10.1	3.56	A	1.45+1.45+1.45+1.45+5.22	11.00	2460	11.29	10.80	10.35	4.47	A
			TBA		TBA						TBA		TBA					
	1.2+1.2+1.2+1.8+1.8	7.2	1.2+1.2+1.2+1.8+1.8	7.20	1960	9.0	8.6	8.2	3.67	A	1.8+1.8+1.8+2.5+2.5	10.40	2460	11.29	10.80	10.35	4.23	A
			TBA		TBA						TBA		TBA					
	1.2+1.2+1.2+1.8+2.5	7.9	1.2+1.2+1.2+1.8+2.5	7.90	2200	10.1	9.7	9.3	3.59	A	1.75+1.75+1.75+2.43+3.31	11.00	2460	11.29	10.80	10.35	4.47	A
			TBA		TBA						TBA		TBA					
	1.2+1.2+1.2+1.8+3.5	8.9	1.2+1.2+1.2+1.7+3.3	8.50	2390	11.0	10.5	10.1	3.56	A	1.62+1.62+1.62+2.25+3.88	11.00	2460	11.29	10.80	10.35	4.47	A
			TBA		TBA						TBA		TBA					
	1.2+1.2+1.2+1.8+5	10.4	1.0+1.0+1.0+1.5+4.1	8.50	2390	11.0	10.5	10.1	3.56	A	1.38+1.38+1.38+1.91+4.97	11.00	2460	11.29	10.80	10.35	4.47	A
			TBA		TBA						TBA		TBA					
	1.2+1.2+1.2+2.5+2.5	8.6	1.2+1.2+1.2+2.5+2.5	8.50	2480	11.4	10.9	10.4	3.47	A	1.62+1.62+1.62+3.07+3.07	11.00	2460	11.29	10.80	10.35	4.47	A
			TBA		TBA						TBA		TBA					
	1.2+1.2+1.2+2.5+3.5	9.6	1.1+1.1+1.1+2.2+3.1	8.50	2390	11.0	10.5	10.1	3.56	A	1.51+1.51+1.51+2.85+3.61	11.00	2460	11.29	10.80	10.35	4.47	A
			TBA		TBA						TBA		TBA					
	1.2+1.2+1.2+2.5+5	11.1	0.9+0.9+0.9+1.9+3.8	8.50	2390	11.0	10.5	10.1	3.56	A	1.29+1.29+1.29+2.44+4.67	11.00	2460	11.29	10.80	10.35	4.47	A
			TBA		TBA						TBA		TBA					

POSSIBLE COMBINATIONS TO OPERATE		COOLING									HEATING							
		TOTAL (kW)	CAPACITY RATING (kW)		OUTDOOR UNIT				EER	Class	CAPACITY RATING (kW)		OUTDOOR UNIT				COP	Class
				TOTAL	TOTAL INPUT (W)	AMPERE (A) at 230V						TOTAL	TOTAL INPUT (W)	AMPERE (A) at 230V				
FIVE UNITS	1.2+1.2+1.2+3.5+3.5	10.6	1.0+1.0+1.0+2.8+2.8	8.50	2390	11.0	10.5	10.1	3.56	A	1.41+1.41+1.41+3.38+3.38	11.00	2460	11.29	10.80	10.35	4.47	A
			TBA		TBA						TBA		TBA					
	1.2+1.2+1.2+3.5+5	12.1	0.8+0.8+0.8+2.5+3.5	8.50	2390	11.0	10.5	10.1	3.56	A	1.22+1.22+1.22+2.92+4.41	11.00	2460	11.29	10.80	10.35	4.47	A
			TBA		TBA						TBA		TBA					
	1.2+1.2+1.2+5+5	13.6	0.8+0.8+0.8+3.1+3.1	8.50	2390	11.0	10.5	10.1	3.56	A	1.08+1.08+1.08+3.89+3.89	11.00	2460	11.29	10.80	10.35	4.47	A
			TBA		TBA						TBA		TBA					
	1.2+1.2+1.8+1.8+1.8	7.8	1.2+1.2+1.8+1.8+1.8	7.80	2180	10.0	9.6	9.2	3.58	A	1.78+1.78+2.48+2.48+2.48	11.00	2460	11.29	10.80	10.35	4.47	A
			TBA		TBA						TBA		TBA					
	1.2+1.2+1.8+1.8+2.5	8.5	1.2+1.2+1.8+1.8+2.5	8.50	2490	11.4	10.9	10.5	3.41	A	1.65+1.65+2.29+2.29+3.12	11.00	2460	11.29	10.80	10.35	4.47	A
			TBA		TBA						TBA		TBA					
	1.2+1.2+1.8+1.8+3.5	9.5	1.07+1.07+1.61+1.61+3.13	8.50	2390	11.0	10.5	10.1	3.56	A	1.53+1.53+2.13+2.13+3.67	11.00	2460	11.29	10.80	10.35	4.47	A
			TBA		TBA						TBA		TBA					
	1.2+1.2+1.8+1.8+5	11.0	0.98+0.98+1.47+1.47+4.09	8.50	2390	11.0	10.5	10.1	3.56	A	1.31+1.31+1.82+1.82+4.74	11.00	2460	11.29	10.80	10.35	4.47	A
			TBA		TBA						TBA		TBA					
	1.2+1.2+1.8+2.5+2.5	9.2	1.17+1.17+1.76+2.45+2.45	8.50	2390	11.0	10.5	10.1	3.56	A	1.53+1.53+2.13+2.90+2.90	11.00	2460	11.29	10.80	10.35	4.47	A
			TBA		TBA						TBA		TBA					
	1.2+1.2+1.8+2.5+3.5	10.2	1.06+1.06+1.59+2.20+3.09	8.50	2390	11.0	10.5	10.1	3.56	A	1.43+1.43+2.00+2.71+3.43	11.00	2460	11.29	10.80	10.35	4.47	A
			TBA		TBA						TBA		TBA					
	1.2+1.2+1.8+2.5+5	11.7	0.92+0.92+1.38+1.92+3.85	8.50	2390	11.0	10.5	10.1	3.56	A	1.24+1.24+1.72+2.34+4.47	11.00	2460	11.29	10.80	10.35	4.47	A
			TBA		TBA						TBA		TBA					
	1.2+1.2+1.8+3.5+3.5	11.2	0.96+0.96+1.45+2.81+2.81	8.50	2390	11.0	10.5	10.1	3.56	A	1.35+1.35+1.87+3.22+3.22	11.00	2460	11.29	10.80	10.35	4.47	A
			TBA		TBA						TBA		TBA					
	1.2+1.2+1.8+3.5+5	12.7	0.85+0.85+1.28+2.48+3.54	8.50	2390	11.0	10.5	10.1	3.56	A	1.17+1.17+1.63+2.80+4.23	11.00	2460	11.29	10.80	10.35	4.47	A
			TBA		TBA						TBA		TBA					
	1.2+1.2+1.8+5+5	14.2	0.76+0.76+1.14+3.17+3.17	8.50	2390	11.0	10.5	10.1	3.56	A	1.04+1.04+1.44+3.74+3.74	11.00	2460	11.29	10.80	10.35	4.47	A
			TBA		TBA						TBA		TBA					
	1.2+1.2+2.5+2.5+2.5	9.9	1.09+1.09+2.27+2.27+2.27	8.50	2390	11.0	10.5	10.1	3.56	A	1.43+1.43+2.71+2.71+2.71	11.00	2460	11.29	10.80	10.35	4.47	A
			TBA		TBA						TBA		TBA					
	1.2+1.2+2.5+2.5+3.5	10.9	0.99+0.99+2.06+2.06+2.89	8.50	2390	11.0	10.5	10.1	3.56	A	1.35+1.35+2.54+2.54+3.22	11.00	2460	11.29	10.80	10.35	4.47	A
			TBA		TBA						TBA		TBA					
	1.2+1.2+2.5+2.5+5	12.4	0.87+0.87+1.81+1.81+3.63	8.50	2390	11.0	10.5	10.1	3.56	A	1.17+1.17+2.21+2.21+4.23	11.00	2460	11.29	10.80	10.35	4.47	A
			TBA		TBA						TBA		TBA					
	1.2+1.2+2.5+3.5+3.5	11.9	0.91+0.91+1.89+2.65+2.65	8.50	2390	11.0	10.5	10.1	3.56	A	1.27+1.27+2.40+3.03+3.03	11.00	2460	11.29	10.80	10.35	4.47	A
			TBA		TBA						TBA		TBA					
	1.2+1.2+2.5+3.5+5	13.4	0.81+0.81+1.68+2.35+3.36	8.50	2390	11.0	10.5	10.1	3.56	A	1.11+1.11+2.10+2.66+4.02	11.00	2460	11.29	10.80	10.35	4.47	A
			TBA		TBA						TBA		TBA					

	POSSIBLE COMBINATIONS TO OPERATE	COOLING									HEATING								
		TOTAL (kW)	CAPACITY RATING (kW)		OUTDOOR UNIT				EER	Class	CAPACITY RATING (kW)		OUTDOOR UNIT				COP	Class
				TOTAL	TOTAL INPUT (W)	AMPERE (A) at 230V						TOTAL	TOTAL INPUT (W)	AMPERE (A) at 230V				
FIVE UNITS	1.2+1.2+2.5+5+5	14.9	0.68+0.68+1.43+2.85+2.85	8.50	2390	11.0	10.5	10.1	3.56	A	0.99+0.99+1.87+3.58+3.58	11.00	2460	11.29	10.80	10.35	4.47	A
			TBA		TBA						TBA		TBA					
	1.2+1.2+3.5+3.5+3.5	12.9	0.79+0.79+2.31+2.41+2.95	8.50	2390	11.0	10.5	10.1	3.56	A	1.2+1.2+2.87+2.87+2.87	11.00	2460	11.29	10.80	10.35	4.47	A
			TBA		TBA						TBA		TBA					
	1.2+1.2+3.5+3.5+5	14.4	0.71+0.71+2.07+2.97+2.95	8.50	2390	11.0	10.5	10.1	3.56	A	1.06+1.06+2.53+2.53+3.82	11.00	2460	11.29	10.80	10.35	4.47	A
			TBA		TBA						TBA		TBA					
	1.2+1.8+1.8+1.8+1.8	8.4	1.2+1.8+1.8+1.8+1.8	8.40	2530	11.6	11.1	10.6	3.32	A	1.68+2.33+2.33+2.33+2.33	11.00	2460	11.29	10.80	10.35	4.47	A
			TBA		TBA						TBA		TBA					
	1.2+1.8+1.8+1.8+2.5	9.1	1.12+1.68+1.68+1.68+2.34	8.50	2390	11.0	10.5	10.1	3.56	A	1.56+2.17+2.17+2.17+2.94	11.00	2460	11.29	10.80	10.35	4.47	A
			TBA		TBA						TBA		TBA					
	1.2+1.8+1.8+1.8+3.5	10.1	1.01+1.51+1.51+1.51+2.95	8.50	2390	11.0	10.5	10.1	3.56	A	1.46+2.02+2.02+2.02+3.48	11.00	2460	11.29	10.80	10.35	4.47	A
			TBA		TBA						TBA		TBA					
	1.2+1.8+1.8+1.8+5	11.6	0.88+1.32+1.32+1.32+3.66	8.50	2390	11.0	10.5	10.1	3.56	A	1.25+1.74+1.74+1.74+4.53	11.00	2460	11.29	10.80	10.35	4.47	A
			TBA		TBA						TBA		TBA					
	1.2+1.8+1.8+2.5+2.5	9.8	1.04+1.56+1.56+2.17+2.17	8.50	2390	11.0	10.5	10.1	3.56	A	1.46+2.02+2.02+2.75+2.75	11.00	2460	11.29	10.80	10.35	4.47	A
			TBA		TBA						TBA		TBA					
	1.2+1.8+1.8+2.5+3.5	10.8	0.9+1.4+1.4+2.0+2.8	8.50	2390	11.0	10.5	10.1	3.56	A	1.36+1.90+1.90+2.58+3.26	11.00	2460	11.29	10.80	10.35	4.47	A
			TBA		TBA						TBA		TBA					
	1.2+1.8+1.8+2.5+5	12.3	0.8+1.2+1.2+1.7+3.5	8.50	2390	11.0	10.5	10.1	3.56	A	1.19+1.65+1.65+2.24+4.28	11.00	2460	11.29	10.80	10.35	4.47	A
			TBA		TBA						TBA		TBA					
	1.2+1.8+1.8+3.5+3.5	11.8	0.9+1.3+1.3+2.5+2.5	8.50	2390	11.0	10.5	10.1	3.56	A	1.29+1.79+1.79+3.07+3.07	11.00	2460	11.29	10.80	10.35	4.47	A
			TBA		TBA						TBA		TBA					
	1.2+1.8+1.8+3.5+5	13.3	0.8+1.2+1.2+2.2+3.2	8.50	2390	11.0	10.5	10.1	3.56	A	1.13+1.56+1.56+2.69+4.06	11.00	2460	11.29	10.80	10.35	4.47	A
			TBA		TBA						TBA		TBA					
	1.2+1.8+1.8+5+5	14.8	0.7+1.0+1.0+2.9+2.9	8.50	2390	11.0	10.5	10.1	3.56	A	1+1.39+1.39+3.61+3.61	11.00	2460	11.29	10.80	10.35	4.47	A
			TBA		TBA						TBA		TBA					
	1.2+1.8+2.5+2.5+2.5	10.5	1.0+1.5+2.0+2.0+2.0	8.50	2390	11.0	10.5	10.1	3.56	A	1.37+1.90+2.58+2.58+2.58	11.00	2460	11.29	10.80	10.35	4.47	A
			TBA		TBA						TBA		TBA					
	1.2+1.8+2.5+2.5+3.5	11.5	0.9+1.3+1.9+1.9+2.6	8.50	2390	11.0	10.5	10.1	3.56	A	1.29+1.79+2.43+2.43+3.07	11.00	2460	11.29	10.80	10.35	4.47	A
			TBA		TBA						TBA		TBA					

	POSSIBLE COMBINATIONS TO OPERATE	COOLING									HEATING							
		TOTAL (kW)	CAPACITY RATING (kW)	TOTAL	OUTDOOR UNIT				EER	Class	CAPACITY RATING (kW)	TOTAL	OUTDOOR UNIT				COP	Class
					TOTAL INPUT (W)	AMPERE (A) at 230V							TOTAL INPUT (W)	AMPERE (A) at 230V				
FIVE UNITS	1.2+1.8+2.5+2.5+5	13.0	0.78+1.18+1.63+1.63+3.27	8.50	2390	11.0	10.5	10.1	3.56	A	1.13+1.56+2.13+2.13+4.06	11.00	2460	11.29	10.80	10.35	4.47	A
			TBA		TBA						TBA		TBA					
	1.2+1.8+2.5+3.5+3.5	12.5	0.82+1.22+1.7+2.38+2.38	8.50	2390	11.0	10.5	10.1	3.56	A	1.21+1.69+2.29+2.90+2.90	11.00	2460	11.29	10.80	10.35	4.47	A
			TBA		TBA						TBA		TBA					
	1.2+1.8+2.5+3.5+5	14.0	0.73+1.09+1.52+2.13+3.04	8.50	2390	11.0	10.5	10.1	3.56	A	1.07+1.49+2.02+2.56+3.86	11.00	2460	11.29	10.80	10.35	4.47	A
			TBA		TBA						TBA		TBA					
	1.2+1.8+2.5+5+5	15.5	0.66+1.0+1.4+2.7+2.7	8.50	2390	11.0	10.5	10.1	3.56	A	0.96+1.33+1.81+3.45+3.45	11.00	2460	11.29	10.80	10.35	4.47	A
			TBA		TBA						TBA		TBA					
	1.2+1.8+3.5+3.5+3.5	13.5	0.8+1.1+2.2+2.2+2.2	8.50	2390	11.0	10.5	10.1	3.56	A	1.15+1.62+2.75+2.75+2.75	11.00	2460	11.29	10.80	10.35	4.47	A
			TBA		TBA						TBA		TBA					
	1.2+1.8+3.5+3.5+5	15.0	0.68+1.02+2.0+2.0+2.8	8.50	2390	11.0	10.5	10.1	3.56	A	1.02+1.42+2.44+2.44+3.69	11.00	2460	11.29	10.80	10.35	4.47	A
			TBA		TBA						TBA		TBA					
	1.8+1.8+1.8+1.8+1.8	9.0	1.7+1.7+1.7+1.7+1.7	8.50	2230	10.2	9.8	9.4	3.81	A	2.2+2.2+2.2+2.2+2.2	11.00	2460	11.29	10.80	10.35	4.47	A
			(3.20-9.90)		(600-3040)						(3.40-12.10)		(610-2710)					
	1.8+1.8+1.8+1.8+2.5	9.7	1.6+1.6+1.6+1.67+2.2	8.50	2230	10.2	9.8	9.4	3.81	A	2.05+2.05+2.05+2.05+2.8	11.00	2460	11.29	10.80	10.35	4.47	A
			(3.20-9.90)		(600-3040)						(3.40-12.10)		(610-2710)					
	1.8+1.8+1.8+1.8+3.5	10.7	1.4+1.4+1.4+1.4+2.8	8.50	2230	10.2	9.8	9.4	3.81	A	1.92+1.92+1.92+1.92+3.32	11.00	2460	11.29	10.80	10.35	4.47	A
			(3.20-9.90)		(600-3040)						(3.40-12.10)		(610-2710)					
	1.8+1.8+1.8+1.8+5	12.2	1.3+1.3+1.3+1.3+3.5	8.50	2230	10.2	9.8	9.4	3.81	A	1.67+1.67+1.67+1.67+4.32	11.00	2460	11.29	10.80	10.35	4.47	A
			(3.20-9.90)		(600-3040)						(3.40-12.10)		(610-2710)					
	1.8+1.8+1.8+2.5+2.5	10.4	1.5+1.5+1.5+2.0+2.0	8.50	2230	10.2	9.8	9.4	3.81	A	1.92+1.92+1.92+2.62+2.62	11.00	2460	11.29	10.80	10.35	4.47	A
			(3.20-9.90)		(600-3040)						(3.40-12.10)		(610-2710)					
	1.8+1.8+1.8+2.5+3.5	11.4	1.3+1.3+1.3+1.9+2.6	8.50	2230	10.2	9.8	9.4	3.81	A	1.81+1.81+1.81+2.46+3.11	11.00	2460	11.29	10.80	10.35	4.47	A
			(3.20-9.90)		(600-3040)						(3.40-12.10)		(610-2710)					
	1.8+1.8+1.8+2.5+5	12.9	1.2+1.2+1.2+1.7+3.3	8.50	2230	10.2	9.8	9.4	3.81	A	1.58+1.58+1.58+2.15+4.11	11.00	2460	11.29	10.80	10.35	4.47	A
			(3.20-9.90)		(600-3040)						(3.40-12.10)		(610-2710)					
	1.8+1.8+1.8+3.5+3.5	12.4	1.2+1.2+1.2+2.4+2.4	8.50	2230	10.2	9.8	9.4	3.81	A	1.7+1.7+1.7+2.95+2.95	11.00	2460	11.29	10.80	10.35	4.47	A
			(3.20-9.90)		(600-3040)						(3.40-12.10)		(610-2710)					
	1.8+1.8+1.8+3.5+5	13.9	1.1+1.1+1.1+2.1+3.0	8.50	2230	10.2	9.8	9.4	3.81	A	1.5+1.5+1.5+2.58+3.92	11.00	2460	11.29	10.80	10.35	4.47	A
			(3.20-9.90)		(600-3040)						(3.40-12.10)		(610-2710)					

POSSIBLE COMBINATIONS TO OPERATE		COOLING									HEATING							
		TOTAL (kW)	CAPACITY RATING (kW)		OUTDOOR UNIT				EER	Class	CAPACITY RATING (kW)		OUTDOOR UNIT				COP	Class
				TOTAL	TOTAL INPUT (W)	AMPERE (A) at 230V						TOTAL	TOTAL INPUT (W)	AMPERE (A) at 230V				
FIVE UNITS	1.8+1.8+1.8+5+5	15.4	1.0+1.0+1.0+2.8+2.8 (3.20-9.90)	8.50	2230 (600-3040)	10.2	9.8	9.4	3.81	A	1.34+1.34+1.34+3.49+3.49 (3.40-12.10)	11.00	2460 (610-2710)	11.29	10.80	10.35	4.47	A
	1.8+1.8+2.5+2.5+2.5	11.1	1.4+1.4+1.9+1.9+1.9 (3.20-9.90)	8.50	2230 (600-3040)	10.2	9.8	9.4	3.81	A	1.81+1.81+2.46+2.46+2.46 (3.40-12.10)	11.00	2460 (610-2710)	11.29	10.80	10.35	4.47	A
	1.8+1.8+2.5+2.5+3.5	12.1	1.3+1.3+1.8+1.8+2.5 (3.20-9.90)	8.50	2230 (600-3040)	10.2	9.8	9.4	3.81	A	1.71+1.71+2.32+2.32+2.94 (3.40-12.10)	11.00	2460 (610-2710)	11.29	10.80	10.35	4.47	A
	1.8+1.8+2.5+2.5+5	13.6	1.1+1.1+1.6+1.6+3.1 (3.20-9.90)	8.50	2230 (600-3040)	10.2	9.8	9.4	3.81	A	1.5+1.5+2.04+2.04+3.92 (3.40-12.10)	11.00	2460 (610-2710)	11.29	10.80	10.35	4.47	A
	1.8+1.8+2.5+3.5+3.5	13.1	1.2+1.2+1.6+2.3+2.3 (3.20-9.90)	8.50	2230 (600-3040)	10.2	9.8	9.4	3.81	A	1.62+1.62+2.2+2.78+2.78 (3.40-12.10)	11.00	2460 (610-2710)	11.29	10.80	10.35	4.47	A
	1.8+1.8+2.5+3.5+5	14.6	1.1+1.1+1.5+2.0+2.9 (3.20-9.90)	8.50	2230 (600-3040)	10.2	9.8	9.4	3.81	A	1.43+1.43+1.95+2.46+3.72 (3.40-12.10)	11.00	2460 (610-2710)	11.29	10.80	10.35	4.47	A
	1.8+1.8+3.5+3.5+3.5	14.1	1.1+1.1+2.1+2.1+2.1 (3.20-9.90)	8.50	2230 (600-3040)	10.2	9.8	9.4	3.81	A	1.54+1.54+2.64+2.64+2.64 (3.40-12.10)	11.00	2460 (610-2710)	11.29	10.80	10.35	4.47	A
	1.8+2.5+2.5+2.5+2.5	11.8	1.3+1.8+1.8+1.8+1.8 (3.20-9.90)	8.50	2230 (600-3040)	10.2	9.8	9.4	3.81	A	1.8+2.3+2.3+2.3+2.3 (3.40-12.10)	11.00	2460 (610-2710)	11.29	10.80	10.35	4.47	A
	1.8+2.5+2.5+2.5+3.5	12.8	1.2+1.7+1.7+1.7+2.3 (3.20-9.90)	8.50	2230 (600-3040)	10.2	9.8	9.4	3.81	A	1.6+2.2+2.2+2.2+2.8 (3.40-12.10)	11.00	2460 (610-2710)	11.29	10.80	10.35	4.47	A
	1.8+2.5+2.5+2.5+5	14.3	1.1+1.5+1.5+1.5+3.0 (3.20-9.90)	8.50	2230 (600-3040)	10.2	9.8	9.4	3.81	A	1.45+1.95+1.95+1.95+3.7 (3.40-12.10)	11.00	2460 (610-2710)	11.29	10.80	10.35	4.47	A
	1.8+2.5+2.5+3.5+3.5	13.8	1.1+1.5+1.5+2.2+2.2 (3.20-9.90)	8.50	2230 (600-3040)	10.2	9.8	9.4	3.81	A	1.54+2.09+2.09+2.64+2.64 (3.40-12.10)	11.00	2460 (610-2710)	11.29	10.80	10.35	4.47	A
	1.8+2.5+2.5+3.5+5	15.3	1.0+1.4+1.4+1.9+2.8 (3.20-9.90)	8.50	2230 (600-3040)	10.2	9.8	9.4	3.81	A	1.37+1.86+1.86+2.35+3.56 (3.40-12.10)	11.00	2460 (610-2710)	11.29	10.80	10.35	4.47	A
	1.8+2.5+3.5+3.5+3.5	14.8	1.0+1.4+2.0+2.0+2.0 (3.20-9.90)	8.50	2230 (600-3040)	10.2	9.8	9.4	3.81	A	1.45+1.9+2.55+2.55+2.55 (3.40-12.10)	11.00	2460 (610-2710)	11.29	10.80	10.35	4.47	A
	2.5+2.5+2.5+2.5+2.5	12.5	1.7+1.7+1.7+1.7+1.7 (3.20-9.90)	8.50	2230 (600-3040)	10.2	9.8	9.4	3.81	A	2.2+2.2+2.2+2.2+2.2 (3.40-12.10)	11.00	2460 (610-2710)	11.29	10.80	10.35	4.47	A
	2.5+2.5+2.5+2.5+3.5	13.5	1.6+1.6+1.6+1.6+2.2 (3.20-9.90)	8.50	2230 (600-3040)	10.2	9.8	9.4	3.81	A	2.09+2.09+2.09+2.09+2.64 (3.40-12.10)	11.00	2460 (610-2710)	11.29	10.80	10.35	4.47	A
	2.5+2.5+2.5+2.5+5	15.0	1.4+1.4+1.4+1.4+2.8 (3.20-9.90)	8.50	2230 (600-3040)	10.2	9.8	9.4	3.81	A	1.86+1.86+1.86+1.86+3.56 (3.40-12.10)	11.00	2460 (610-2710)	11.29	10.80	10.35	4.47	A
	2.5+2.5+2.5+3.5+3.5	14.5	1.5+1.5+1.5+2.0+2.0 (3.20-9.90)	8.50	2230 (600-3040)	10.2	9.8	9.4	3.81	A	2.0+2.0+2.0+2.5+2.5 (3.40-12.10)	11.00	2460 (610-2710)	11.29	10.80	10.35	4.47	A
	2.5+2.5+3.5+3.5+3.5	15.5	1.4+1.4+1.9+1.9+1.9 (3.20-9.90)	8.50	2230 (600-3040)	10.2	9.8	9.4	3.81	A	1.9+1.9+2.4+2.4+2.4 (3.40-12.10)	11.00	2460 (610-2710)	11.29	10.80	10.35	4.47	A

Indoor unit model	Nominal cooling capacity (kW)	Capacity (kW) at single unit operation		Suitable room size (m^2) At single unit operation	
		Cooling	Heating	Cooling	Heating
RAK-18QXA	1.8	1.00-2.50	1.10-3.20	8-12	10-13
RAK-25QXA	2.5	0.90-3.10	0.90-4.40	11-17	14-18
RAK-35QXA	3.5	0.90-4.00	0.90-5.00	16-24	17-22
RAK-50QXA	5.0	0.90-5.20	0.90-7.50	23-34	23-29
RAK-18QPA	1.8	1.00-2.50	1.10-3.20	8-12	10-13
RAK-25QPA	2.5	1.00-3.10	1.10-4.40	11-17	14-18
RAK-35QPA	3.5	1.00-4.00	1.10-5.00	16-24	17-22
RAK-50QPA	5.0	1.00-5.60	1.10-7.20	23-34	23-29
RAI-25RPA	2.5	1.00-3.10	1.10-4.40	11-17	14-18
RAI-35RPA	3.5	1.00-4.00	1.10-5.00	18-28	22-27
RAI-50RPA	5.0	1.00-5.60	1.10-7.20	23-34	23-29
RAD-18RPA	1.8	1.00-2.50	1.10-3.20	8-12	10-13
RAD-25RPA	2.5	1.00-3.10	1.10-4.40	11-17	14-18
RAD-35RPA	3.5	1.00-4.00	1.10-5.00	18-28	22-27
RAD-50RPA	5.0	1.00-5.60	1.10-7.20	23-34	23-29
RAF-25RPA	2.5	0.90-3.10	0.90-4.40	11-17	14-18
RAF-35RPA	3.5	0.90-4.00	0.90-5.00	16-24	17-22
RAF-50RPA	5.0	0.90-5.20	0.90-8.10	23-34	23-29
RAF-25RPA	2.5	0.90-3.10	0.90-4.40	11-17	14-18
RAF-35RPA	3.5	0.90-4.00	0.9-5.00	16-24	17-22
RAF-50RPA	5.0	1.90-5.20	2.20-7.30	23-34	23-29

*Two, three, four or five indoor units can be installed with one outdoor unit.
*One-unit values are for one unit operation with two indoor connected.
*Total nominal cooling capacity should not be more than 15.5kW.

4.6.8. RAM-130NP6A

Whichever indoor units are installed, cooling and heating capacity depends on how many and which indoor units are operating at the same time.

POSSIBLE COMBINATIONS TO OPERATE		COOLING							HEATING					
		TOTAL (kW)	CAPACITY RATING (kW) (RANGE)	OUTDOOR UNIT TOTAL	OUTDOOR UNIT TOTAL INPUT (W)	OUTDOOR UNIT AMPERE(A) at 230V	EER	Class	CAPACITY RATING (kW) (RANGE)	OUTDOOR UNIT TOTAL	OUTDOOR UNIT TOTAL INPUT (W)	OUTDOOR UNIT AMPERE(A) at 230V	COP	Class
ONE UNIT	1.2	1.2	1.20 (1.00-1.60)	1.20	370 (200-480)	1.6	3.24	A	1.80 (1.1-2.2)	1.80	495 (200-650)	2.2	3.64	A
	1.8	1.8	1.8 (1-2.5)	1.80	560 (200-750)	2.5	3.21	A	2.5 (1.1-3.2)	2.50	750 (200-1050)	3.3	3.33	C
	2.5	2.5	2.5 (1-2.8)	2.50	780 (200-980)	3.4	3.21	A	3.9 (1.1-4.7)	3.90	1145 (200-1380)	5.0	3.41	B
	3.5	3.5	3.5 (1-3.9)	3.50	1160 (200-1280)	5.1	3.02	B	4.8 (1.1-5.8)	4.80	1550 (200-1870)	6.8	3.10	D
	5	5.0	5 (1-5.6)	5.00	1780 (200-1960)	7.8	2.81	C	6.5 (1.1-7.2)	6.50	2400 (200-2660)	10.5	2.71	E
TWO UNITS	1.2+1.2	2.4	1.20+1.20 (1.50-2.80)	2.40	690 (200-980)	3.0	3.48	A	1.80+1.80 (1.5-4.2)	3.60	980 (200-1100)	4.3	3.67	A
	1.2+1.8	3.0	1.20+1.80 (1.50-3.50)	3.00	920 (200-1050)	4.0	3.26	A	1.80+2.50 (1.5-5.2)	4.30	1180 (200-1300)	5.2	3.64	A
	1.2+2.5	3.7	1.20+2.50 (1.50-4.00)	3.70	1210 (200-1350)	5.3	3.06	B	1.80+3.90 (1.50-6.40)	5.70	1550 (200-1780)	6.8	3.68	A
	1.2+3.5	4.7	1.20+3.50 (1.50-5.20)	4.70	1450 (200-1600)	6.4	3.24	A	1.80+4.80 (1.50-7.20)	6.60	1850 (200-2100)	8.1	3.57	B
	1.2+5.0	6.2	1.20+5.00 (1.50-5.90)	6.20	1750 (200-1980)	7.7	3.54	A	1.56+5.64 (1.50-7.20)	7.20	2070 (200-2110)	9.1	3.48	B
	1.8+1.8	3.6	1.8+1.8 (1.5-4)	3.60	1190 (200-1300)	5.2	3.03	B	2.5+2.5 (1.5-5.2)	5.00	1460 (200-1550)	6.4	3.42	B
	1.8+2.5	4.3	1.8+2.4 (1.5-4.6)	4.20	1310 (200-1450)	5.8	3.21	A	2.4+3.8 (1.5-6.3)	6.20	1820 (200-1920)	8.0	3.41	B
	1.8+3.5	5.3	1.7+3.3 (1.5-5.6)	5.00	1650 (200-1820)	7.2	3.03	B	2.3+4.5 (1.5-7.2)	6.80	1995 (200-2100)	8.8	3.41	B
	1.8+5	6.8	1.4+4 (1.5-5.9)	5.40	1795 (200-1980)	7.9	3.01	B	2+5 (1.5-7.2)	7.00	2050 (200-2100)	9.0	3.41	B
	2.5+2.5	5.0	2.5+2.5 (1.5-5.6)	5.00	1650 (200-1820)	7.2	3.03	B	3.4+3.4 (1.5-7.2)	6.80	2015 (200-2100)	8.8	3.37	C
	2.5+3.5	6.0	2.17+3.03 (1.5-5.7)	5.20	1730 (200-1900)	7.6	3.01	B	3.15+3.85 (1.5-7.2)	7.00	2070 (200-2100)	9.1	3.38	C
	3.5+3.5	7.0	2.7+2.7 (1.5-5.9)	5.40	1795 (200-1980)	7.9	3.01	B	3.6+3.6 (1.5-7.2)	7.20	2110 (200-2110)	9.3	3.41	B
	2.5+5.0	7.5	1.8+3.6 (1.5-5.9)	5.40	1795 (200-1980)	7.9	3.01	B	2.7+4.5 (1.5-7.2)	7.20	2110 (200-2110)	9.3	3.41	B
	3.5+5.0	8.5	2.5+3.5 (1.5-6.6)	6.00	1995 (200-2200)	8.8	3.01	B	3.05+4.15 (1.5-7.2)	7.20	2110 (200-2110)	9.3	3.41	B

	POSSIBLE COMBINATIONS TO OPERATE	COOLING							HEATING					
		TOTAL (kW)	CAPACITY RATING (kW) (RANGE)	OUTDOOR UNIT			EER	Class	CAPACITY RATING (kW) (RANGE)	OUTDOOR UNIT			COP	Class
				TOTAL	TOTAL INPUT (W)	AMPERE(A) at 230V				TOTAL	TOTAL INPUT (W)	AMPERE(A) at 230V		
THREE UNITS	1.2+1.2+1.2	3.6	1.20+1.20+1.20	3.60	1080	4.7	3.33	A	1.80+1.80+1.80	5.40	1480	6.5	3.65	A
			(1.5-6.0)		(200-1680)				(1.5-6.2)		(200-1650)			
	1.2+1.2+1.8	4.2	1.20+1.20+1.80	4.20	1250	5.5	3.36	A	1.80+1.80+2.50	6.10	1580	6.9	3.86	A
			(1.5-6.0)		(200-1680)				(1.5-6.6)		(200-1760)			
	1.2+1.2+2.5	4.9	1.20+1.20+2.50	4.90	1450	6.4	3.38	A	1.73+1.73+3.74	7.20	1900	8.3	3.79	A
					(200-1660)				(1.50-7.20)		(200-2110)			
	1.2+1.2+3.5	5.9	1.20+1.20+3.50	5.90	1525	6.7	3.87	A	1.54+1.54+4.11	7.20	1900	8.3	3.79	A
			(1.50-6.60)		(200-1680)				(1.50-7.20)		(200-2110)			
	1.2+1.2+5.0	7.4	1.02+1.02+4.26	6.30	2095	9.2	3.01	B	1.28+1.28+4.63	7.20	1900	8.3	3.79	A
			(1.50-6.60)		(200-2200)				(1.50-7.20)		(200-2110)			
	1.2+1.8+1.8	4.8	1.20+1.80+1.80	4.80	1420	6.2	3.38	A	1.80+2.50+2.50	6.80	1750	7.7	3.89	A
			(1.50-6.00)		(200-1660)				(1.50-7.20)		(200-1860)			
	1.2+1.8+2.5	5.5	1.20+1.80+2.50	5.50	1780	7.8	3.09	B	1.58+2.20+3.42	7.20	1900	8.3	3.79	A
			(1.50-6.60)		(200-2200)				(1.50-7.20)		(200-2110)			
	1.2+1.8+3.5	6.5	1.16+1.74+3.39	6.30	2020	8.9	3.12	B	1.42+1.98+3.80	7.20	1900	8.3	3.79	A
			(1.50-6.60)		(200-2200)				(1.50-7.20)		(200-2110)			
	1.2+1.8+5.0	8	0.95+1.42+3.94	6.30	2095	9.2	3.01	B	1.20+1.67+4.33	7.20	1900	8.3	3.79	A
			(1.50-6.60)		(200-2200)				(1.50-7.20)		(200-2110)			
	1.2+2.5+2.5	6.2	1.20+2.50+2.50	6.20	2020	8.9	3.07	B	1.35+2.93+2.93	7.20	1900	8.3	3.79	A
			(1.50-6.60)		(200-2200)				(1.50-7.20)		(200-2110)			
	1.2+2.5+3.5	7.2	1.05+2.19+3.06	6.30	2095	9.2	3.01	B	1.23+2.67+3.29	7.20	1900	8.3	3.79	A
			(1.50-6.60)		(200-2200)				(1.50-7.20)		(200-2110)			
	1.2+3.5+3.5	8.2	0.92+2.69+2.69	6.30	2095	9.2	3.01	B	1.14+3.03+3.03	7.20	1900	8.3	3.79	A
			(1.50-6.60)		(200-2200)				(1.50-7.20)		(200-2110)			
	1.8+1.8+1.8	5.4	1.8+1.8+1.8	5.40	1780	7.8	3.03	B	2.333+2.333+2.333	7.00	1850	8.2	3.78	A
			(1.5-6)		(200-2200)				(1.5-7.2)		(200-2110)			
	1.8+1.8+2.5	6.1	1.8+1.8+2.5	6.10	2020	8.9	3.02	B	2+2+3.2	7.20	1900	8.4	3.79	A
			(1.5-6.4)		(200-2200)				(1.5-7.2)		(200-2110)			
	1.8+1.8+3.5	7.1	1.6+1.6+3.1	6.30	2095	9.2	3.01	B	1.85+1.85+3.5	7.20	1900	8.4	3.79	A
			(1.5-6.6)		(200-2200)				(1.5-7.2)		(200-2110)			
	1.8+1.8+5	8.6	1.3+1.3+3.7	6.30	2095	9.2	3.01	B	1.6+1.6+4	7.20	1900	8.4	3.79	A
			(1.5-6.6)		(200-2200)				(1.5-7.2)		(200-2110)			
	1.8+2.5+2.5	6.8	1.7+2.3+2.3	6.30	2095	9.2	3.01	B	1.8+2.7+2.7	7.20	1900	8.4	3.79	A
			(1.5-6.6)		(200-2200)				(1.5-7.2)		(200-2110)			
	1.8+2.5+3.5	7.8	1.5+2+2.8	6.30	2095	9.2	3.01	B	1.6+2.5+3.1	7.20	1900	8.4	3.79	A
			(1.5-6.6)		(200-2200)				(1.5-7.2)		(200-2110)			
	1.8+3.5+3.5	8.8	1.3+2.5+2.5	6.30	2095	9.2	3.01	B	1.4+2.9+2.9	7.20	1900	8.4	3.79	A
			(1.5-6.6)		(200-2200)				(1.5-7.2)		(200-2110)			
	2.5+2.5+2.5	7.5	2.1+2.1+2.1	6.30	2095	9.2	3.01	B	2.4+2.4+2.4	7.20	1900	8.4	3.79	A
			(1.5-6.6)		(200-2200)				(1.5-7.2)		(200-2110)			
	2.5+2.5+3.5	8.5	1.85+1.85+2.6	6.30	2095	9.2	3.01	B	2.23+2.23+2.74	7.20	1900	8.4	3.79	A
			(1.5-6.6)		(200-2200)				(1.5-7.2)		(200-2110)			

POSSIBLE COMBINATIONS TO OPERATE		COOLING							HEATING					
		TOTAL (kW)	CAPACITY RATING (kW) (RANGE)	OUTDOOR UNIT TOTAL	OUTDOOR UNIT TOTAL INPUT (W)	OUTDOOR UNIT AMPER E(A) at 230V	EER	Class	CAPACITY RATING (kW) (RANGE)	OUTDOOR UNIT TOTAL	OUTDOOR UNIT TOTAL INPUT (W)	OUTDOOR UNIT AMPER E(A) at 230V	COP	Class
FOUR UNITS	(1.2+1.2)+(1.2+1.2)	4.8	(1.20+1.20)+(1.20+1.20) (1.5-5.6)	4.80	1380 (200-1960)	6.1	3.48	A	(1.80+1.80)+(1.80+1.80) (1.5-8.4)	7.20	1960 (200-2200)	8.6	3.67	A
	(1.2+1.2)+(1.2+1.8)	5.4	(1.20+1.20)+(1.20+1.80) (1.5-6.3)	5.40	1610 (200-1960)	7.1	3.35	A	(1.80+1.80)+(1.80+2.50) (1.5-9.4)	7.90	2160 (200-2400)	9.5	3.66	A
	(1.2+1.8)+(1.2+1.8)	6.0	(1.20+1.20)+(1.20+1.80) (1.5-7.0)	6.00	1840 (200-2100)	8.1	3.26	A	(1.80+2.50)+(1.80+2.50) (1.5-10.4)	8.60	2360 (200-2600)	10.4	3.64	A
	(1.2+1.2)+(1.2+2.5)	6.1	(1.20+1.20)+(1.20+2.50) (1.5-6.8)	6.10	1900 (200-2330)	8.3	3.21	A	(1.80+1.80)+(1.80+3.90) (1.5-10.6)	9.30	2530 (200-2880)	11.1	3.68	A
	(1.2+2.5)+(1.2+2.5)	7.4	(1.20+2.50)+(1.20+2.50) (1.5-8)	7.40	2420 (200-2700)	10.6	3.06	B	(1.80+3.90)+(1.80+3.90) (1.5-12.8)	13.6	3100 (200-3560)	13.6	3.68	A
	(1.2+1.2)+(1.2+3.5)	7.1	(1.20+1.20)+(1.20+3.50) (1.5-8)	7.10	2140 (200-2580)	9.4	3.32	A	(1.80+1.80)+(1.80+4.80) (1.5-11.4)	12.4	2830 (200-3200)	12.4	3.60	A
	(1.2+3.5)+(1.2+3.5)	9.4	(1.20+3.50)+(1.20+3.50) (1.5-10.4)	9.40	2900 (200-3200)	12.7	3.24	A	(1.80+4.80)+(1.80+4.80) (1.5-14.4)	16.2	3700 (200-4200)	16.2	3.57	B
	(1.2+1.2)+(1.2+5.0)	8.6	(1.20+1.20)+(1.20+5.00) (1.5-8.7)	8.60	2440 (200-2960)	10.7	3.52	A	(1.80+1.80)+(1.56+5.64) (1.5-11.4)	13.4	3050 (200-3210)	13.4	3.54	B
	(1.2+5.0)+(1.2+5.0)	12.4	(1.20+5.00)+(1.20+5.00) (1.5-8.7)	12.4	3500 (200-3960)	15.4	3.54	A	(1.56+5.64)+(1.56+5.64) (1.5-14.4)	18.2	4140 (200-4220)	18.2	3.48	B
	(1.8+1.8)+(1.8+1.8)	7.2	(1.8+1.8)+(1.8+1.8) (1.5-8)	7.20	2380 (200-2600)	10.5	3.03	B	(2.5+2.5)+(2.5+2.5) (1.5-10.4)	12.8	2920 (200-3100)	12.8	3.42	B
	(1.8+1.8)+(1.8+2.5)	7.9	(1.8+1.8)+(1.8+2.4) (1.5-8.6)	7.80	2500 (200-2750)	11.0	3.12	B	(2.5+2.5)+(2.4+3.8) (1.5-11.5)	14.4	3280 (200-3470)	14.4	3.41	B
	(1.8+2.5)+(1.8+2.5)	8.6	(1.8+2.4)+(1.8+2.4) (1.5-9.2)	8.40	2620 (200-2900)	11.5	3.21	A	(2.4+3.8)+(2.4+3.8) (1.5-12.6)	16.0	3640 (200-3840)	16.0	3.41	B
	(1.8+1.8)+(1.8+3.5)	8.9	(1.8+1.8)+(1.7+3.3) (1.5-9.6)	8.60	2840 (200-3120)	12.5	3.03	B	(2.5+2.5)+(2.3+4.5) (1.5-12.4)	15.2	3455 (200-3650)	15.2	3.42	B
	(1.8+2.5)+(1.8+3.5)	9.6	(1.8+2.4)+(1.7+3.3) (1.5-10.2)	9.20	2960 (200-3270)	13.0	3.11	B	(2.4+3.8)+(2.3+4.5) (1.5-13.5)	16.8	3815 (200-4020)	16.8	3.41	B
	(1.8+1.8)+(1.8+5)	10.4	(1.8+1.8)+(1.4+4) (1.5-9.9)	9.00	2985 (200-3280)	13.1	3.02	B	(2.5+2.5)+(2+5) (1.5-12.4)	15.4	3510 (200-3650)	15.4	3.42	B
	(1.8+2.5)+(1.8+5)	11.1	(1.8+2.4)+(1.4+4) (1.5-10.5)	9.60	3105 (200-3430)	13.6	3.09	B	(2.4+3.8)+(2+5) (1.5-13.5)	17.0	3870 (200-4020)	17.0	3.41	B
	(1.8+3.5)+(1.8+3.5)	10.6	(1.7+3.3)+(1.7+3.3) (1.5-11.2)	10.00	3300 (200-3640)	14.5	3.03	B	(2.3+4.5)+(2.3+4.5) (1.5-14.4)	17.5	3990 (200-4200)	17.5	3.41	B
	(1.8+3.5)+(1.8+5)	12.1	(1.7+3.3)+(1.4+4) (1.5-11.5)	10.40	3445 (200-3800)	15.1	3.02	B	(2.3+4.5)+(2+5) (1.5-14.4)	17.8	4045 (200-4200)	17.8	3.41	B
	(1.8+5)+(1.8+5)	13.6	(1.4+4)+(1.4+4) (1.5-11.8)	10.80	3590 (200-3960)	15.8	3.01	B	(2+5)+(2+5) (1.5-14.4)	18.0	4100 (200-4200)	18.0	3.41	B
	(1.8+2.5)+(2.5+2.5)	9.3	(1.8+2.4)+(2.5+2.5) (1.5-10.2)	9.20	2960 (200-3270)	13.0	3.11	B	(2.4+3.8)+(3.4+3.4) (1.5-13.5)	16.8	3835 (200-4020)	16.8	3.39	C

POSSIBLE COMBINATIONS TO OPERATE		COOLING							HEATING					
		TOTAL (kW)	CAPACITY RATING (kW) (RANGE)	OUTDOOR UNIT TOTAL	OUTDOOR UNIT TOTAL INPUT (W)	OUTDOOR UNIT AMPERE(A) at 230V	EER	Class	CAPACITY RATING (kW) (RANGE)	OUTDOOR UNIT TOTAL	OUTDOOR UNIT TOTAL INPUT (W)	OUTDOOR UNIT AMPERE(A) at 230V	COP	Class
FOUR UNITS	(1.8+5)+(2.5+2.5)	11.8	(1.4+4)+(2.5+2.5)	10.40	3445	15.1	3.02	B	(2+5)+(3.4+3.4)	17.9	4065	17.9	3.39	C
			(1.5-11.5)		(200-3800)				(1.5-14.4)		(200-4200)			
	(1.8+3.5)+(2.5+2.5)	10.3	(1.7+3.3)+(2.5+2.5)	10.00	3300	14.5	3.03	B	(2.3+4.5)+(3.4+3.4)	17.6	4010	17.6	3.39	C
			(1.5-11.2)		(200-3640)				(1.5-14.4)		(200-4200)			
	(1.8+3.5)+(2.5+3.5)	11.3	(1.7+3.3)+(2.17+3.03)	10.20	3380	14.8	3.02	B	(2.3+4.5)+(3.15+3.85)	17.9	4065	17.9	3.39	C
			(1.5-11.3)		(200-3720)				(1.5-14.4)		(200-4200)			
	(1.8+5)+(2.5+3.5)	12.8	(1.4+4)+(2.17+3.03)	10.60	3525	15.5	3.01	B	(2+5)+(3.15+3.85)	18.1	4120	18.1	3.40	C
			(1.5-11.6)		(200-3880)				(1.5-14.4)		(200-4200)			
	(1.8+5)+(2.5+5)	14.3	(1.4+4)+(1.8+3.6)	10.80	3590	15.8	3.01	B	(2+5)+(2.7+4.5)	18.3	4160	18.3	3.41	B
			(1.5-11.8)		(200-3960)				(1.5-14.4)		(200-4210)			
	(1.8+3.5)+(3.5+3.5)	12.3	(1.7+3.3)+(2.7+2.7)	10.40	3445	15.1	3.02	B	(2.3+4.5)+(3.6+3.6)	18.0	4105	18.0	3.41	B
			(1.5-11.5)		(200-3800)				(1.5-14.4)		(200-4210)			
	(1.8+5)+(3.5+3.5)	13.8	(1.4+4)+(2.7+2.7)	10.80	3590	15.8	3.01	B	(2+5)+(3.6+3.6)	18.3	4160	18.3	3.41	B
			(1.5-11.8)		(200-3960)				(1.5-14.4)		(200-4210)			
	(1.8+5)+(3.5+5)	15.3	(1.4+4)+(2.5+3.5)	11.40	3790	16.6	3.01	B	(2+5)+(3.05+4.15)	18.3	4160	18.3	3.41	B
			(1.5-12.5)		(200-4180)				(1.5-14.4)		(200-4210)			
	(2.5+2.5)+(2.5+2.5)	10.0	(2.5+2.5)+(2.5+2.5)	10.00	3300	14.5	3.03	B	(3.4+3.4)+(3.4+3.4)	17.7	4030	17.7	3.37	C
			(1.5-11.2)		(200-3640)				(1.5-14.4)		(200-4200)			
	(2.5+2.5)+(2.5+3.5)	11.0	(2.5+2.5)+(2.17+3.03)	10.20	3380	14.8	3.02	B	(3.4+3.4)+(3.15+3.85)	17.9	4085	17.9	3.38	C
			(1.5-11.3)		(200-3720)				(1.5-14.4)		(200-4200)			
	(2.5+2.5)+(2.5+5)	12.5	(2.5+2.5)+(1.8+3.6)	10.40	3445	15.1	3.02	B	(3.4+3.4)+(2.7+4.5)	18.1	4125	18.1	3.39	C
			(1.5-11.5)		(200-3800)				(1.5-14.4)		(200-4210)			
	(2.5+3.5)+(2.5+3.5)	12.0	(2.17+3.03)+(2.17+3.03)	10.40	3460	15.2	3.01	B	(3.15+3.85)+(3.15+3.85)	18.2	4140	18.2	3.38	C
			(1.5-11.4)		(200-3800)				(1.5-14.4)		(200-4200)			
	(2.5+5)+(2.5+3.5)	13.5	(1.8+3.6)+(2.17+3.03)	10.60	3525	15.5	3.01	B	(2.7+4.5)+(3.15+3.85)	18.4	4180	18.4	3.40	C
			(1.5-11.6)		(200-3880)				(1.5-14.4)		(200-4210)			
	(2.5+5)+(2.5+5)	15.0	(1.8+3.6)+(1.8+3.6)	10.80	3590	15.8	3.01	B	(2.7+4.5)+(2.7+4.5)	18.5	4220	18.5	3.41	B
			(1.5-11.8)		(200-3960)				(1.5-14.4)		(200-4220)			
	(2.5+3.5)+(3.5+3.5)	13.0	(2.17+3.03)+(2.7+2.7)	10.60	3525	15.5	3.01	B	(3.15+3.85)+(3.6+3.6)	18.4	4180	18.4	3.40	C
			(1.5-11.6)		(200-3880)				(1.5-14.4)		(200-4210)			
	(2.5+5)+(3.5+3.5)	14.5	(1.8+3.6)+(2.7+2.7)	10.80	3590	15.8	3.01	B	(2.7+4.5)+(3.6+3.6)	18.5	4220	18.5	3.41	B
			(1.5-11.8)		(200-3960)				(1.5-14.4)		(200-4220)			
	(3.5+3.5)+(3.5+3.5)	14.0	(2.7+2.7)+(2.7+2.7)	10.80	3590	15.8	3.01	B	(3.6+3.6)+(3.6+3.6)	18.5	4220	18.5	3.41	B
			(1.5-11.8)		(200-3960)				(1.5-14.4)		(200-4220)			
	(3.5+3.5.0)+(3.5+5.0)	15.5	(2.7+2.7)+(2.5+3.5)	11.40	3790	16.6	3.01	B	(3.6+3.6)+(3.05+4.15)	18.5	4220	18.5	3.41	B
			(1.5-12.5)		(200-4180)				(1.5-14.4)		(200-4220)			
	(3.5+5.0)+(3.5+5.0)	17.0	(2.5+3.5)+(2.5+3.5)	12.00	3990	17.5	3.01	B	(3.05+4.15)+(3.05+4.15)	18.5	4220	18.5	3.41	B
			(1.5-13.2)		(200-4400)				(1.5-14.4)		(200-4220)			
	(1.2+1.2)+(1.2+1.2+1.2)	6	(1.20+1.20)+(1.20+1.20+1.20)	6.00	1770	7.8	3.39	A	(1.80+1.80)+(1.80+1.80+1.80)	9.00	2460	10.8	3.79	A
			(1.5-8.8)		(200-2660)				(1.5-10.4)		(200-2750)			

	POSSIBLE COMBINATIONS TO OPERATE	COOLING							HEATING					
		TOTAL (kW)	CAPACITY RATING (kW) (RANGE)	OUTDOOR UNIT TOTAL	OUTDOOR UNIT TOTAL INPUT (W)	OUTDOOR UNIT AMPERE(A) at 230V	EER	Class	CAPACITY RATING (kW) (RANGE)	OUTDOOR UNIT TOTAL	OUTDOOR UNIT TOTAL INPUT (W)	OUTDOOR UNIT AMPERE(A) at 230V	COP	Class
FIVE UNITS	(1.2+1.2)+(1.2+1.2+1.8)	6.6	(1.20+1.20)+(1.20+1.20+1.80) (1.5-8.8)	6.60	1940 (200-2660)	8.5	3.40	A	(1.80+1.80)+(1.80+1.80+2.50) (1.5-10.8)	9.70	2560 (200-2860)	11.2	3.79	A
	(1.2+1.2)+(1.2+1.2+2.5)	7.3	(1.20+1.20)+(1.20+1.20+2.50) (1.5-8.8)	7.30	2140 (200-2640)	9.4	3.41	A	(1.80+1.80)+(1.73+1.73+3.74) (1.5-11.4)	10.80	2880 (200-3210)	12.6	3.75	A
	(1.2+1.2)+(1.2+1.2+3.5)	8.3	(1.20+1.20)+(1.20+1.20+3.50) (1.5-9.4)	8.30	2215 (200-2660)	9.7	3.75	A	(1.80+1.80)+(1.54+1.54+4.11) (1.5-11.4)	10.80	2880 (200-3210)	12.6	3.75	A
	(1.2+1.2)+(1.2+1.2+5.0)	9.8	(1.20+1.20)+(1.02+1.02+4.26) (1.5-9.4)	8.70	2785 (200-3180)	12.2	3.12	B	(1.80+1.80)+(1.28+1.28+4.63) (1.5-11.4)	10.80	2880 (200-3210)	12.6	3.75	A
	(1.2+1.2)+(1.2+1.8+1.8)	7.2	(1.20+1.20)+(1.20+1.80+1.80) (1.5-8.8)	7.20	2110 (200-2640)	9.3	3.40	A	(1.80+1.80)+(1.80+2.50+2.50) (1.5-11.4)	10.40	2730 (200-2960)	12.0	3.81	A
	(1.2+1.2)+(1.2+1.8+2.5)	7.9	(1.20+1.20)+(1.20+1.80+2.50) (1.5-9.4)	7.90	2470 (200-3180)	10.8	3.20	B	(1.80+1.80)+(1.58+2.20+3.42) (1.5-11.4)	10.80	2880 (200-3210)	12.6	3.75	A
	(1.2+1.2)+(1.2+1.8+3.5)	8.9	(1.20+1.20)+(1.16+1.74+3.39) (1.5-9.4)	8.70	2710 (200-3180)	11.9	3.21	A	(1.80+1.80)+(1.42+1.98+3.80) (1.5-11.4)	10.80	2880 (200-3210)	12.6	3.75	A
	(1.2+1.2)+(1.2+1.8+5.0)	10.4	(1.20+1.20)+(0.95+1.42+3.94) (1.5-9.4)	8.70	2785 (200-3180)	12.2	3.12	B	(1.80+1.80)+(1.20+1.67+4.33) (1.5-11.4)	10.80	2880 (200-3210)	12.6	3.75	A
	(1.2+1.2)+(1.2+2.5+2.5)	8.6	(1.20+1.20)+(1.20+2.50+2.50) (1.5-9.4)	8.60	2710 (200-3180)	11.9	3.17	B	(1.80+1.80)+(1.35+2.95+2.93) (1.5-11.4)	10.80	2880 (200-3210)	12.6	3.75	A
	(1.2+1.2)+(1.2+2.5+3.5)	9.6	(1.20+1.20)+(1.05+2.19+3.06) (1.5-9.4)	8.70	2785 (200-3180)	12.2	3.12	B	(1.80+1.80)+(1.23+2.67+3.29) (1.5-11.4)	10.80	2880 (200-3210)	12.6	3.75	A
	(1.2+1.2)+(1.2+3.5+3.5)	10.6	(1.20+1.20)+(0.92+2.69+2.69) (1.5-9.4)	8.70	2785 (200-3180)	12.2	3.12	B	(1.80+1.80)+(1.14+3.03+3.03) (1.5-11.4)	10.80	2880 (200-3210)	12.6	3.75	A
	(1.2+1.2)+(1.8+1.8+1.8)	7.8	(1.20+1.20)+(1.80+1.80+1.80) (1.5-8.8)	7.80	2470 (200-3180)	10.8	3.16	B	(1.80+1.80)+(2.33+2.33+2.33) (1.5-11.4)	10.60	2830 (200-3210)	12.4	3.75	A
	(1.2+1.2)+(1.8+1.8+2.5)	8.5	(1.20+1.20)+(1.80+1.80 2.50) (1.5-9.2)	8.50	2710 (200-3180)	11.9	3.14	B	(1.80+1.80)+(2.00+2.00+3.20) (1.5-11.4)	10.80	2880 (200-3210)	12.6	3.75	A
	(1.2+1.2)+(1.8+1.8+3.5)	9.5	(1.20+1.20)+(1.60+1.60+3.10) (1.5-9.4)	8.70	2785 (200-3180)	12.2	3.12	B	(1.80+1.80)+(1.85+1.85+3.50) (1.5-11.4)	10.80	2880 (200-3210)	12.6	3.75	A
	(1.2+1.2)+(1.8+1.8+5.0)	11.0	(1.20+1.20)+(1.30+1.30+3.70) (1.5-9.4)	8.70	2785 (200-3180)	12.2	3.12	B	(1.80+1.80)+(1.60+1.60+4.00) (1.5-11.4)	10.80	2880 (200-3210)	12.6	3.75	A
	(1.2+1.2)+(1.8+2.5+2.5)	9.2	(1.20+1.20)+(1.70+2.30+2.30) (1.5-9.4)	8.70	2785 (200-3180)	12.2	3.12	B	(1.80+1.80)+(1.80+2.70+2.70) (1.5-11.4)	10.80	2880 (200-3210)	12.6	3.75	A
	(1.2+1.2)+(1.8+2.5+3.5)	10.2	(1.20+1.20)+(1.50+2.00+2.80) (1.5-9.4)	8.70	2785 (200-3180)	12.2	3.12	B	(1.80+1.80)+(1.60+2.50+3.10) (1.5-11.4)	10.80	2880 (200-3210)	12.6	3.75	A
	(1.2+1.2)+(1.8+3.5+3.5)	11.2	(1.20+1.20)+(1.30+2.50+2.50) (1.5-9.4)	8.70	2785 (200-3180)	12.2	3.12	B	(1.80+1.80)+(1.40+2.90+2.90) (1.5-11.4)	10.80	2880 (200-3210)	12.6	3.75	A
	(1.2+1.2)+(2.5+2.5+2.5)	9.9	(1.20+1.20)+(2.10+2.10+2.10) (1.5-9.4)	8.70	2785 (200-3180)	12.2	3.12	B	(1.80+1.80)+(2.40+2.40+2.40) (1.5-11.4)	10.80	2880 (200-3210)	12.6	3.75	A

POSSIBLE COMBINATIONS TO OPERATE		COOLING							HEATING					
		TOTAL (kW)	CAPACITY RATING (kW) (RANGE)	OUTDOOR UNIT TOTAL	OUTDOOR UNIT TOTAL INPUT (W)	OUTDOOR UNIT AMPERE(A) at 230V	EER	Class	CAPACITY RATING (kW) (RANGE)	OUTDOOR UNIT TOTAL	OUTDOOR UNIT TOTAL INPUT (W)	OUTDOOR UNIT AMPERE(A) at 230V	COP	Class
FIVE UNITS	(1.2+1.2)+(2.5+2.5+3.5)	10.9	(1.20+1.20)+(1.85+1.85+2.60) (1.5-9.4)	8.70	2785 (200-3180)	12.2	3.12	B	(1.80+1.80)+(2.23+2.23+2.74) (1.5-11.4)	10.80	2880 (200-3210)	12.6	3.75	A
	(1.2+1.8)+(1.2+1.2+1.2)	6.6	(1.20+1.80)+(1.20+1.20+1.20) (1.5-9.5)	6.60	2000 (200-2730)	8.8	3.30	A	(1.80+2.50)+(1.80+1.80+1.80) (1.5-11.4)	9.70	2660 (200-2950)	11.7	3.65	A
	(1.2+1.8)+(1.2+1.2+1.8)	7.2	(1.20+1.80)+(1.20+1.20+1.80) (1.5-9.5)	7.20	2170 (200-2730)	9.5	3.32	A	(1.80+2.50)+(1.80+1.80+2.50) (1.5-11.8)	10.40	2760 (200-3.60)	12.1	3.77	A
	(1.2+1.8)+(1.2+1.2+2.5)	7.9	(1.20+1.80)+(1.20+1.20+2.50) (1.5-9.5)	7.90	2370 (200-2710)	10.4	3.33	A	(1.80+2.50)+(1.73+1.73+3.74) (1.5-12.4)	11.50	3080 (200-3410)	13.5	3.73	A
	(1.2+1.8)+(1.2+1.2+3.5)	8.9	(1.20+1.80)+(1.20+1.20+3.50) (1.5-10.1	8.90	2445 (200-2730)	10.7	3.64	A	(1.80+2.50)+(1.54+1.54+4.11) (1.5-12.4)	11.50	3080 (200-3410)	13.5	3.73	A
	(1.2+1.8)+(1.2+1.2+5.0)	10.4	(1.20+1.80)+(1.02+1.02+4.26) (1.5-10.1)	9.30	3015 (200-3250)	13.2	3.08	B	(1.80+2.50)+(1.28+1.28+4.63) (1.5-12.4)	11.50	3080 (200-3410)	13.5	3.73	A
	(1.2+1.8)+(1.2+1.8+1.8)	7.8	(1.20+1.80)+(1.20+1.80+1.80) (1.5-9.5)	7.80	2340 (200-2710)	10.3	3.33	A	(1.80+2.50)+(1.80+2.50+2.50) (1.5-12.4)	11.10	2930 (200-3160)	12.9	3.79	A
	(1.2+1.8)+(1.2+1.8+2.5)	8.5	(1.20+1.80)+(1.20+1.80+2.5) (1.5-10.1)	8.50	2700 (200-3250)	11.9	3.15	B	(1.80+2.50)+(1.58+2.20+3.42) (1.5-12.4)	11.50	3080 (200-3410)	13.5	37.3	A
	(1.2+1.8)+(1.2+1.8+3.5)	9.5	(1.20+1.80)+(1.16+1.74+3.39) (1.5-10.1)	9.30	2940 (200-3250)	12.9	3.16	B	(1.80+2.50)+(1.42+1.98+3.80) (1.5-12.4)	11.50	3080 (200-3410)	13.5	3.73	A
	(1.2+1.8)+(1.2+1.8+5.0)	11.0	(1.20+1.80)+(0.95+1.42+3.94) (1.5-10.1)	9.30	3015 (200-3250)	13.2	3.08	B	(1.80+2.50)+(1.20+1.67+4.33) (1.5-12.4)	11.50	3080 (220-3410)	13.5	3.73	A
	(1.2+1.8)+(1.2+2.5+2.5)	9.2	(1.20+1.80)+(1.20+2.50+2.50) (1.5-10.1)	9.20	2940 (200-3250)	12.9	3.13	B	(1.80+2.50)+(1.35+2.93+2.93) (1.5-12.4)	11.50	3080 (200-3410)	13.5	3.73	A
	(1.2+1.8)+(1.2+2.5+3.5)	10.2	(1.20+1.80)+(1.05+2.19+3.06) (1.5-10.1)	9.30	3015 (200-3250)	13.2	3.08	B	(1.80+2.50)+(1.23+2.67+3.29) (1.5-12.4)	11.50	3080 (200-3410)	13.5	3.73	A
	(1.2+1.8)+(1.2+3.5+3.5)	11.2	(1.20+1.80)+(0.92+2.69+2.69) (1.5-10.1)	9.30	3015 (200-3250)	13.2	3.08	B	(1.80+2.50)+(1.14+3.03+3.03) (1.5-1.4)	11.50	3080 (200-3410)	13.5	3.73	A
	(1.2+1.8)+(1.8+1.8+1.8)	8.4	(1.20+1.80)+(1.80+1.80+1.80) (1.5-9.5)	8.40	2700 (200-3250)	11.9	3.11	B	(1.80+2.50)+(2.33+2.33+2.33) (1.5-12.4)	11.30	3030 (200-3410)	13.3	3.73	A
	(1.2+1.8)+(1.8+1.8+2.5)	9.1	(1.20+1.80)+(1.80+1.80+2.50) (1.5-9.9)	9.10	2940 (200-3250)	12.9	3.10	B	(1.80+2.50)+(2.00+2.00+3.20) (1.5-12.4)	11.50	3080 (200-3410)	13.5	3.73	A
	(1.2+1.8)+(1.8+1.8+3.5)	10.1	(1.20+1.80)+(1.60+1.60+3.10) (1.5-10.1)	9.30	3015 (200-3250)	13.2	3.08	B	(1.80+2.50)+(1.85+1.85+3.50) (1.5-12.5)	11.50	3080 (200-3410)	13.5	3.73	A
	(1.2+1.8)+(1.8+1.8+5.0)	11.6	(1.20+1.80)+(1.30+1.30+3.70) (1.5-10.1)	9.30	3015 (200-3250)	13.2	3.08	B	(1.80+2.50)+(1.60+1.60+4.00) (1.5-12.4)	11.50	3080 (200-3410)	13.5	3.73	A
	(1.2+1.8)+(1.8+2.5+2.5)	9.8	(1.20+1.80)+(1.70+2.30+2.30) (1.5-10.1)	9.30	3015 (200-3250)	13.2	3.08	B	(1.80+2.50)+(1.80+2.70+2.70) (1.5-12.4)	11.50	3080 (200-3410)	13.5	3.73	A
	(1.2+1.8)+(1.8+2.5+3.5)	10.8	(1.20+1.80)+(1.50+2.00+2.80) (1.5-10.1)	9.30	3015 (200-3250)	13.2	3.08	B	(1.80+2.50)+(1.60+2.50+3.10) (1.5-12.4)	11.50	3080 (200-3410)	13.5	3.73	A
	(1.2+1.8)+(1.8+3.5+3.5)	11.8	(1.20+1.80)+(1.30+2.50+2.50) (1.5-10.1)	9.30	3015 (200-3250)	13.2	3.08	B	(1.80+2.50)+(1.40+2.90+2.90) (1.5-12.4)	11.50	3080 (200-3410)	13.5	3.73	A

POSSIBLE COMBINATIONS TO OPERATE		COOLING							HEATING					
		TOTAL (kW)	CAPACITY RATING (kW) (RANGE)	OUTDOOR UNIT TOTAL	OUTDOOR UNIT TOTAL INPUT (W)	OUTDOOR UNIT AMPERE(A) at 230V	EER	Class	CAPACITY RATING (kW) (RANGE)	OUTDOOR UNIT TOTAL	OUTDOOR UNIT TOTAL INPUT (W)	OUTDOOR UNIT AMPERE(A) at 230V	COP	Class
FIVE UNITS	(1.2+1.8)+(2.5+2.5+2.5)	10.5	(1.20+1.80)+(2.10+2.10+2.10) (1.5-10.1	9.30	3015 (200-3250)	13.2	3.08	B	(1.80+2.50)+(2.40+2.40+2.40) (1.5-12.4)	11.50	3080 (200-3410)	13.5	3.73	A
	(1.2+1.8)+(2.5+2.5+3.5)	11.5	(1.20+1.80)+(1.85+1.85+2.60) (1.5-10.1)	9.30	3015 (200-3250)	13.2	3.08	B	(1.80+2.50)+(2.23+2.23+2.74) (1.5+12.4)	11.50	3080 (200-3410)	13.5	3.73	A
	(1.2+2.5)+(1.2+1.2+1.2)	7.3	(1.20+2.50)+(1.20+1.20+1.20) (1.5-10)	7.30	2290 (200-3030)	10.1	3.19	B	(1.80+3.90)+(1.80+1.80+1.80) (1.5-12.5)	11.10	3030 (200-3430)	13.3	3.66	A
	(1.2+2.5)+(1.2+1.2+1.8)	7.9	(1.20+2.50)+(1.20+1.20+1.80) (1.5-10)	7.90	2460 (200-3030)	10.8	3.21	A	(1.80+3.90)+(1.80+1.80+2.50) (1.5-13)	11.80	3130 (200-3540)	13.7	3.77	A
	(1.2+2.5)+(1.2+1.2+2.5)	8.6	(1.20+2.50)+(1.20+1.20+2.50) (1.5-10)	8.60	2660 (200-3010)	11.7	3.23	A	(1.80+3.90)+(1.73+1.73+3.74) (1.5-13.5)	12.90	3450 (200-3890)	15.2	3.74	A
	(1.2+2.5)+(1.2+1.2+3.5)	9.6	(1.20+2.50)+(1.20+1.20+3.50) (1.5-10.6)	9.60	2735 (200-3030)	12.0	3.51	A	(1.80+3.90)+(1.54+1.54+4.11) (1.5-13.6)	12.90	3450 (200-3890)	15.2	3.74	A
	(1.2+2.5)+(1.2+1.2+5.0)	11.1	(1.20+2.50)+(1.02+1.02+4.26) (1.5-10.6)	10.00	3305 (200-3550)	14.5	3.03	B	(1.80+3.90)+(1.28+1.28+4.63) (1.5-13.6)	12.90	3450 (200-3890)	15.2	3.74	A
	(1.2+2.5)+(1.2+1.8+1.8)	8.5	(1.20+2.50)+(1.20+1.80+1.80) (1.5-10)	8.50	2630 (200-3010)	11.6	3.23	A	(1.80+3.90)+(1.80+2.50+2.50) (1.5-13.6)	12.50	3300 (200-3540)	14.5	3.79	A
	(1.2+2.5)+(1.2+1.8+2.5)	9.2	(1.20+2.50)+(1.20+1.80+2.50) (1.5-10.6)	9.20	2990 (200-3550)	13.1	3.08	B	(1.80+3.90)+(1.58+2.20+3.42) (1.5-13.5)	12.90	3450 (200-3890)	15.2	3.74	A
	(1.2+2.5)+(1.2+1.8+3.5)	10.2	(1.20+2.50)+(1.16+1.74+3.39) (1.5-10.6)	10.00	3230 (200-3550)	14.2	3.10	B	(1.80+3.90)+(1.42+1.98+3.80) (1.5-13.5)	12.90	3450 (200-3890)	15.2	3.74	A
	(1.2+2.5)+(1.2+1.8+5.0)	11.7	(1.20+2.50)+(0.95+1.42+3.94) (1.5-10.6)	10.00	3305 (200-3550)	14.5	3.03	B	(1.80+3.90)+(1.20+1.67+4.33) (1.5-13.6)	12.90	3450 (200-3890)	15.2	3.74	A
	(1.2+2.5)+(1.2+2.5+2.5)	9.9	(1.20+2.50)+(1.20+2.50+2.50) (1.5-10.6)	9.90	3230 (200-3550)	14.2	3.07	B	(1.80+390)+(1.35+2.93+2.93) (1.5-13.6)	12.90	3450 (200-3890)	15.2	3.74	A
	(1.2+2.5)+(1.2+2.5+3.5)	10.9	(1.20+2.50)+(1.05+2.19+3.06) (1.5-10.6)	10.00	3305 (200-3550)	14.5	3.03	B	(1.80+3.90)+(1.23+2.67+3.29) (1.5-1.6)	12.90	3450 (200-3890)	15.2	3.74	A
	(1.2+2.5)+(1.2+3.5+3.5)	11.9	(1.20+2.50)+(0.92+2.69+2.69) (1.5-10.6)	10.00	3305 (200-3550)	14.5	3.03	B	(1.80+3.90)+(1.14+3.03+3.03) (1.5-13.5)	12.90	3450 (200-3590)	15.2	3.74	A
	(1.2+2.5)+(1.8+1.8+1.8)	9.1	(1.20+2.50)+(1.80+1.80+1.80) (1.5-10)	9.10	2990 (200-3550)	13.1	3.04	B	(1.80+3.90)+(2.33+2.33+2.33) (1.5-13.5)	12.70	3400 (200-3890)	14.9	3.74	A
	(1.2+2.5)+(1.8+1.8+2.5)	9.8	(1.20+2.50)+(1.80+1.80+2.50) (1.5-10.4)	9.80	3230 (200-3550)	14.2	3.03	B	(1.80+3.90)+(2.00+2.00+3.20) (1.5-13.6)	12.90	3450 (200-3890)	15.2	3.74	A
	(1.2+2.5)+(1.8+1.8+3.5)	10.8	(1.20+2.50)+(1.60+1.60+3.10) (1.5-10.6)	10.00	3305 (200-3550)	14.5	3.03	B	(1.80+3.90)+(1.85+1.85+3.50) (1.5-13.6)	12.90	3450 (200-3890)	15.2	3.74	A
	)1.2+2.5)+(1.8+1.8+5.0)	12.3	(1.20+2.50)+(1.30+1.30+3.70) (1.5-10.6)	10.00	3305 (200-3550)	14.5	3.03	B	(1.80+3.90)+(1.60+1.60+4.00) (1.5-13.6)	12.90	3450 (200-3890)	15.2	3.74	A
	(1.2+2.5)+(1.8+2.5+2.5)	10.5	(1.20+2.50)+(1.70+2.30+2.30) (1.5-10.6)	10.00	3305 (200-3550)	14.5	3.03	B	(1.80+3.90)+(1.80+2.70+2.70) (1.5-13.6	12.90	3450 (200-3890)	15.2	3.74	A
	(1.2+2.5)+(1.8+3.5+3.5)	12.5	(1.20+2.50)+(1.30+2.50+2.50) (1.5-10.6)	10.00	3305 (200-3550)	14.5	3.03	B	(1.80+3.90)+(1.40+2.90+2.90) (1.5-13.6)	12.90	3450 (200-3890)	15.2	3.74	A

POSSIBLE COMBINATIONS TO OPERATE		COOLING							HEATING					
		TOTAL (kW)	CAPACITY RATING (kW) (RANGE)	OUTDOOR UNIT TOTAL	OUTDOOR UNIT TOTAL INPUT (W)	OUTDOOR UNIT AMPERE(A) at 230V	EER	Class	CAPACITY RATING (kW) (RANGE)	OUTDOOR UNIT TOTAL	OUTDOOR UNIT TOTAL INPUT (W)	OUTDOOR UNIT AMPERE(A) at 230V	COP	Class
FIVE UNITS	(1.2+2.5)+(2.5+2.5+3.5)	12.2	(1.20+2.50)+(1.85+1.85+2.60) (1.5-10.6)	10.00	3305 (200-3550)	14.5	3.03	B	(1.80+3.90)+(2.23+2.23+2.74) (1.5-13.6)	12.90	3450 (200-3890)	15.2	3.74	A
	(1.2+3.5)+(1.2+1.2+3.5)	10.6	(1.20+3.50)+(1.20+1.20+3.50) (1.5-11.8)	10.60	2975 (200-3280)	13.1	3.56	A	(1.80+4.80)+(1.54+1.54+4.11) (1.5-14.4)	13.80	3750 (200-4210)	16.5	3.68	A
	(1.2+3.5)+(1.2+1.8+1.8)	9.5	(1.20+3.50)+(1.20+1.80+1.80) (1.5-11.2)	9.50	2870 (200-3260)	12.6	3.31	A	(1.80+4.80)+(1.80+2.50+2.50) (1.5-14.4)	13.40	3600 (200-3960)	15.8	3.72	A
	(1.2+3.5)+(1.2+1.8+3.5)	11.2	(1.20+3.50)+(1.16+1.74+3.39) (1.5-11.8)	11.00	3470 (200-3800)	15.2	3.17	B	(1.80+4.80)+(1.42+1.98+3.80) (1.5-14.4)	13.80	3750 (200-4210)	16.5	3.68	A
	(1.2+3.5)+(1.2+2.5+2.5)	10.9	(1.20+3.50)+(1.20+2.50+2.50) (1.5-11.8)	10.90	3470 (200-3800)	15.2	3.14	B	(1.80+4.80)+(1.35+2.93+2.93) (1.5-14.4)	13.80	3750 (200-4210)	16.5	3.68	A
	(1.2+3.5)+(1.2+3.5+3.5)	12.9	(1.20+3.50)+(0.92+2.69+2.69) (1.5-11.8)	11.00	3545 (200-3800)	15.6	3.10	B	(1.80+4.80)+(1.14+3.03+3.03) (1.5-14.4)	13.80	3750 (200-4210)	16.5	3.68	A
	(1.2+3.5)+(1.8+1.8+2.5)	10.8	(1.20+3.50)+(1.80+1.80+2.50) (1.5-11.6)	10.80	3470 (200-3800)	15.2	3.11	B	(1.80+4.80)+(2.00+2.00+3.20) (1.5-14.4)	13.80	3750 (200-4210)	16.5	3.68	A
	(1.2+3.5)+(1.8+1.8+5.0)	13.3	(1.20+3.50)+(1.30+1.30+3.70) (1.5-11.8)	11.00	3545 (200-3800)	15.6	3.10	B	(1.80+4.80)+(1.60+1.60+4.00) (1.5-14.4)	13.80	3750 (200-4210)	16.5	3.68	A
	(1.2+3.5)+(1.8+2.5+3.5)	12.5	(1.20+3.50)+(1.50+2.00+2.80) (1.5-11.8)	11.00	3545 (200-3800)	15.6	3.10	B	(1.80+4.80)+(1.60+2.50+3.10) (1.5-14.4)	13.80	3750 (200-4210)	16.5	3.68	A
	(1.2+3.5)+(2.5+2.5+2.5)	12.2	(1.20+3.50)+(2.10+2.10+2.10) (1.5-11.8)	11.00	3545 (200-3800)	15.6	3.10	B	(1.80+4.80)+(2.40+2.40+2.40) (1.5-14.4)	13.80	3750 (200-4210)	16.5	3.68	A
	(1.2+5.0)+(1.2+1.2+1.2)	9.8	(1.20+5.00)+(1.20+1.20+1.20) (1.5-11.9)	9.80	2830 (200-3660)	12.4	3.46	A	(1.56+5.64)+(1.80+1.80+1.80) (1.5-13.4)	12.60	3330 (200-3760)	14.6	3.78	A
	(1.2+5.0)+(1.2+1.2+2.5)	11.1	(1.20+5.00)+(1.20+1.20+2.50) (1.5-11.9)	11.10	3200 (200-3640)	14.1	3.47	A	(1.56+5.64)+(1.73+1.73+3.74) (1.5-14.4)	14.40	3750 (200-4220)	16.5	3.84	A
	(1.2+5.0)+(1.2+1.8+2.5)	11.7	(1.20+5.00)+(1.20+1.80+2.50) (1.5-12.5)	11.70	3530 (200-4180)	15.5	3.31	A	(1.56+5.64)+(1.58+2.20+3.42) (1.5-14.4)	14.40	3750 (200-4220)	16.5	3.84	A
	(1.2+5.0)+(1.2+1.8+5.0)	14.2	(1.20+5.00)+(0.95+1.42+3.94) (1.5-12.5)	12.50	3845 (200-4180)	16.9	3.25	A	(1.56+5.64)+(1.20+1.67+4.33) (1.5-14.4)	14.40	3750 (200-4200)	16.5	3.84	A
	(1.2+5.0)+(1.2+2.5+3.5)	13.4	(1.20+5.00)+(1.05+2.19+3.06) (1.5-12.5)	12.50	3845 (200-4180)	16.9	3.25	A	(1.56+5.64)+(1.23+2.67+3.29) (1.5-14.4)	14.40	3750 (200-4220)	16.5	3.84	A
	(1.2+5.0)+(1.8+1.8+1.8)	11.6	(1.20+5.00)+(1.80+1.80+1.80) (1.5-11.9)	11.60	3530 (200-4180)	15.5	3.29	A	(1.56+5.64)+(2.33+2.33+2.33) (1.5-14.4)	14.20	3700 (200-4220)	16.2	3.84	A
	(1.2+5.0)+(1.8+1.8+3.5)	13.3	(1.20+5.00)+(1.60+1.60+3.10) (1.5-12.5)	12.50	3845 (200-4180)	16.9	3.25	A	(1.56+5.64)+(1.85+1.85+3.50) (1.5-14.4)	14.40	3750 (200-4220)	16.5	3.84	A
	(1.2+5.0)+(1.8+2.5+2.5)	13	(1.20+5.00)+(1.70+2.30+2.30) (1.5-12.5)	12.50	3845 (200-4180)	16.9	3.25	A	(1.56+5.64)+(1.80+2.70+2.70) (1.5-14.4)	14.40	3750 (200-4220)	16.5	3.84	A
	(1.2+5.0)+(1.8+3.5+3.5)	15	(1.20+5.00)+(1.30+2.50+2.50) (1.5-12.5)	12.50	3845 (200-4180)	16.9	3.25	A	(1.56+5.64)+(1.40+2.90+2.90) (1.5-14.4)	14.40	3750 (200-4220)	16.5	3.84	A
	(1.2+5.0)+(2.5+2.5+3.5)	14.7	(1.20+5.00)+(1.85+1.85+2.60) (1.5-12.5)	12.50	3845 (200-4180)	16.9	3.25	A	(1.56+5.64)+(2.23+2.23+2.74) (1.5-14.4)	14.40	3750 (200-4220)	16.5	3.84	A

POSSIBLE COMBINATIONS TO OPERATE		COOLING							HEATING					
		TOTAL (kW)	CAPACITY RATING (kW) (RANGE)	OUTDOOR UNIT TOTAL	OUTDOOR UNIT TOTAL INPUT (W)	OUTDOOR UNIT AMPERE(A) at 230V	EER	Class	CAPACITY RATING (kW) (RANGE)	OUTDOOR UNIT TOTAL	OUTDOOR UNIT TOTAL INPUT (W)	OUTDOOR UNIT AMPERE(A) at 230V	COP	Class
FIVE UNITS	(1.8+1.8)+(1.8+1.8+1.8)	9.0	(1.8+1.8)+(1.8+1.8+1.8) (1.5-10)	9.00	2970 (200-3500)	13.0	3.03	B	(2.5+2.5)+(2.33+2.33+2.33) (1.5-12.4)	12.00	3310 (200-3660)	14.5	3.63	B
	(1.8+1.8)+(1.8+1.8+2.5)	9.7	(1.8+1.8)+(1.8+1.8+2.5) (1.5-10.4)	9.70	3210 (200-3500)	14.1	3.02	B	(2.5+2.5)+(2+2+3.2) (1.5-12.4)	12.20	3360 (200-3660)	14.8	3.63	B
	(1.8+3.5)+(1.8+1.8+1.8)	10.7	(1.7+3.3)+(1.8+1.8+1.8) (1.5-11.6)	10.40	3430 (200-4020)	15.1	3.03	B	(2.3+4.5)+(2.33+2.33+2.33) (1.5-14.4)	13.80	3845 (200-4210)	16.9	3.59	B
	(1.8+5)+(1.8+1.8+1.8)	12.2	(1.4+4)+(1.8+1.8+1.8) (1.5-11.9)	10.80	3575 (200-4180)	15.7	3.02	B	(2+5)+(2.33+2.33+2.33) (1.5-14.4)	14.00	3900 (200-4210)	17.1	3.59	B
	(1.8+2.5)+(1.8+1.8+2.5)	10.4	(1.8+2.4)+(1.8+1.8+2.5) (1.5-11)	10.30	3330 (200-3650)	14.6	3.09	B	(2.4+3.8)+(2+2+3.2) (1.5-13.5)	13.40	3720 (200-4030)	16.3	3.60	B
	(1.8+3.5)+(1.8+1.8+2.5)	11.4	(1.7+3.3)+(1.8+1.8+2.5) (1.5-12)	11.10	3670 (200-4020)	16.1	3.02	B	(2.3+4.5)+(2+2+3.2) (1.5-14.4)	14.00	3895 (200-4210)	17.1	3.59	B
	(1.8+5)+(1.8+1.8+2.5)	12.9	(1.4+4)+(1.8+1.8+2.5) (1.5-12.3)	11.50	3815 (200-4180)	16.8	3.01	B	(2+5)+(2+2+3.2) (1.5-14.4)	14.20	3950 (200-4210)	17.3	3.59	B
	(1.8+3.5)+(1.8+1.8+3.5)	12.4	(1.7+3.3)+(1.6+1.6+3.1) (1.5-12.2)	11.30	3745 (200-4020)	16.4	3.02	B	(2.3+4.5)+(1.85+1.85+3.5) (1.5-14.4)	14.00	3895 (200-4210)	17.1	3.59	B
	(1.8+5)+(1.8+1.8+3.5)	13.9	(1.4+4)+ 1.6+1.6+3.1) (1.5-12.5)	11.70	3890 (200-4180)	17.1	3.01	B	(2+5)+(1.85+1.85+3.5) (1.5-14.4)	14.20	3950 (200-4210)	17.3	3.59	B
	(1.8+5)+(1.8+1.8+5)	15.4	(1.4+4)+(1.3+1.3+3.7) (1.5-12.5)	11.70	3890 (200-4180)	17.1	3.01	B	(2+5)+(1.6+1.6+4) (1.5-14.4)	14.20	3950 (200-4210)	17.3	3.59	B
	(2.5+2.5)+(1.8+1.8+2.5)	11.1	(2.5+2.5)+(1.8+1.8+2.5) (1.5-12)	11.10	3670 (200-4020)	16.1	3.02	B	(3.4+3.4)+(2+2+3.2) (1.5-14.4)	14.00	3915 (200-4210)	17.2	3.58	B
	(2.5+3.5)+(1.8+1.8+2.5)	12.1	(2.17+3.03)+(1.8+1.8+2.5) (1.5-12.1)	11.30	3750 (200-4100)	16.5	3.01	B	(3.15+3.85)+(2+2+3.2) (1.5-14.4)	14.20	3970 (200-4210)	17.4	3.58	B
	(1.8+5)+(1.8+2.5+2.5)	13.6	(1.4+4)+(1.7+2.3+2.3) (1.5-12.5)	11.70	3890 (200-4180)	17.1	3.01	B	(2+5)+(1.8+2.7+2.7) (1.5-14.4)	14.20	3950 (200-4210)	17.3	3.59	B
	(3.5+3.5)+(1.8+1.8+2.5)	13.1	(2.7+2.7)+(1.8+1.8+2.5) (1.5-12.3)	11.50	3815 (200-4180)	16.8	3.01	B	(3.6+3.6)+(2+2+3.2) (1.5-14.4)	14.40	4010 (200-4220)	17.6	3.59	B
	(1.8+5)+(1.8+2.5+3.5)	14.6	(1.4+4)+(1.5+2+2.8) (1.5-12.5)	11.70	3890 (200-4180)	17.1	3.01	B	(2+5)+(1.6+2.5+3.1) (1.5-14.4)	14.20	3950 (200-4210)	17.3	3.59	B
	(3.5+3.5)+(1.8+1.8+3.5)	14.1	(2.7+2.7)+(1.6+1.6+3.1) (1.5-12.5)	11.70	3890 (200-4180)	17.1	3.01	B	(3.6+3.6)+(1.85+1.85+3.5) (1.5-14.4)	14.40	4010 (200-4220)	17.6	3.59	B
	(2.5+2.5)+(1.8+2.5+2.5)	11.8	(2.5+2.5)+(1.7+2.3+2.3) (1.5-12.2)	11.30	3745 (200-4020)	16.4	3.02	B	(3.4+3.4)+(1.8+2.7+2.7) (1.5-14.4)	14.00	3915 (200-4210)	17.2	3.58	B
	(2.5+3.5)+(1.8+2.5+2.5)	12.8	(2.17+3.03)+(1.7+2.3+2.3) (1.5-12.3)	11.50	3825 (200-4100)	16.8	3.01	B	(3.15+3.85)+(1.8+2.7+2.7) (1.5-14.4)	14.20	3970 (200-4210)	17.4	3.58	B
	(1.8+5)+(2.5+2.5+2.5)	14.3	(1.4+4)+(2.1+2.1+2.1) (1.5-12.5)	11.70	3890 (200-4180)	17.1	3.01	B	(2+5)+(2.4+2.4+2.4) (1.5-14.4)	14.20	3950 (200-4210)	17.3	3.59	B
	(3.5+3.5)+(1.8+2.5+2.5)	13.8	(2.7+2.7)+(1.7+2.3+2.3) (1.5-12.5)	11.70	3890 (200-4180)	17.1	3.01	B	(3.6+3.6)+(1.8+2.7+2.7) (1.5-14.4)	14.40	4010 (200-4220)	17.6	3.59	B

	POSSIBLE COMBINATIONS TO OPERATE	COOLING							HEATING					
		TOTAL (kW)	CAPACITY RATING (kW) (RANGE)	OUTDOOR UNIT TOTAL	OUTDOOR UNIT TOTAL INPUT (W)	OUTDOOR UNIT AMPERE(A) at 230V	EER	Class	CAPACITY RATING (kW) (RANGE)	OUTDOOR UNIT TOTAL	OUTDOOR UNIT TOTAL INPUT (W)	OUTDOOR UNIT AMPERE(A) at 230V	COP	Class
FIVE UNITS	(2.5+5)+(1.8+2.5+3.5)	15.3	(1.8+3.6)+(1.5+2+2.8) (1.5-12.5)	11.70	3890 (200-4180)	17.1	3.01	B	(2.7+4.5)+(1.6+2.5+3.1) (1.5-14.4)	14.40	4010 (200-4220)	17.6	3.59	B
	(3.5+3.5)+(1.8+2.5+3.5)	14.8	(2.7+2.7)+(1.5+2+2.8) (1.5-12.5)	11.70	3890 (200-4180)	17.1	3.01	B	(3.6+3.6)+(1.6+2.5+3.1) (1.5-14.4)	14.40	4010 (200-4220)	17.6	3.59	B
	(3.5+3.5)+(1.8+3.5+3.5)	15.8	(2.7+2.7)+(1.3+2.5+2.5) (1.5-12.5)	11.70	3890 (200-4180)	17.1	3.01	B	(3.6+3.6)+(1.4+2.9+2.9) (1.5-14.4)	14.40	4010 (200-4220)	17.6	3.59	B
	(2.5+2.5)+(2.5+2.5+2.5)	12.5	(2.5+2.5)+(2.1+2.1+2.1) (1.5-12.2)	11.30	3745 (200-4020)	16.4	3.02	B	(3.4+3.4)+(2.4+2.4+2.4) (1.5-14.4)	14.00	3915 (200-4210)	17.2	3.58	B
	(2.5+3.5)+(2.5+2.5+2.5)	13.5	(2.17+3.03)+(2.1+2.1+2.1) (1.5-12.3)	11.50	3825 (200-4100)	16.8	3.01	B	(3.15+3.85)+(2.4+2.4+2.4) (1.5-14.4)	14.20	3970 (200-4210)	17.4	3.58	B
	(2.5+5)+(2.5+2.5+2.5)	15.0	(1.8+3.6)+(2.1+2.1+2.1) (1.5-12.5)	11.70	3890 (200-4180)	17.1	3.01	B	(2.7+4.5)+(2.4+2.4+2.4) (1.5-14.4)	14.40	4010 (200-4220)	17.6	3.59	B
	(3.5+3.5)+(2.5+2.5+2.5)	14.5	(2.7+2.7)+(2.1+2.1+2.1) (1.5-12.5)	11.70	3890 (200-4180)	17.1	3.01	B	(3.6+3.6)+(2.4+2.4+2.4) (1.5-14.4)	14.40	4010 (200-4220)	17.6	3.59	B
	(2.5+5)+(2.5+2.5+3.5)	16.0	(1.8+3.6)+(1.85+1.85+2.6) (1.5-12.5)	11.70	3890 (200-4180)	17.1	3.01	B	(2.7+4.5)+(2.23+2.23+2.74) (1.5-14.4)	14.40	4010 (200-4220)	17.6	3.59	B
	(3.5+3.5)+(2.5+2.5+3.5)	15.5	(2.7+2.7)+(1.85+1.85+2.6) (1.5-12.5)	11.70	3890 (200-4180)	17.1	3.01	B	(3.6+3.6)+(2.23+2.23+2.74) (1.5-14.4)	14.40	4010 (200-4220)	17.6	3.59	B
	(3.5+5)+(2.5+2.5+3.5)	17.0	(2.5+3.5)+(1.85+1.85+2.6) (1.5-13.2)	12.30	4090 (200-4400)	18.0	3.01	B	(3.05+4.15)+(2.23+2.23+2.74) (1.5-14.4)	14.40	4010 (200-4220)	17.6	3.59	B
	(1.2+1.2+1.2)+(1.2+1.2+1.2)	7.2	(1.20+1.20+1.20)+(1.20+1.20+1.20) TBA	7.20	2160 TBA	9.5	3.33	A	(1.80+1.80+1.80)+(1.80+1.80+1.80) TBA	10.80	2960 TBA	13.0	3.65	A
	(1.2+1.2+1.2)+(1.2+1.2+3.5)	9.5	(1.20+1.20+1.20)+(1.20+1.20+3.50) TBA	9.50	2605 TBA	11.4	3.65	A	(1.80+1.80+1.80)+(1.54+1.54+4.11) TBA	12.60	3380 TBA	14.8	3.73	A
	(1.2+1.2+1.2)+(1.2+1.8+1.8)	8.4	(1.20+1.20+1.20)+(1.20+1.80+1.80) TBA	8.40	2500 TBA	11.0	3.36	A	(1.80+1.80+1.80)+(1.80+2.50+2.50) TBA	12.20	3230 TBA	14.2	3.78	A
	(1.2+1.2+1.2)+(1.2+1.8+3.5)	10.1	(1.20+1.20+1.20)+(1.16+1.74+3.39) TBA	9.90	3100 TBA	13.6	3.19	B	(1.80+1.80+1.80)+(1.42+1.98+3.80) TBA	12.60	3380 TBA	14.8	3.73	A
	(1.2+1.2+1.2)+(1.2+2.5+2.5)	9.8	(1.20+1.20+1.20)+(1.20+2.50+2.50) TBA	9.80	3100 TBA	13.6	3.16	B	(1.80+1.80+1.80)+(1.35+2.93+2.93) TBA	12.60	3380 TBA	14.8	3.73	A
	(1.2+1.2+1.2)+(1.2+3.5+3.5)	11.8	(1.20+1.20+1.20)+(0.92+2.69+2.69) TBA	9.90	3175 TBA	13.9	3.12	B	(1.80+1.80+1.80)+(1.14+3.03+3.03) TBA	12.60	3380 TBA	14.8	3.73	A
	(1.2+1.2+1.2)+(1.8+1.8+2.5)	9.7	(1.20+1.20+1.20)+(1.80+1.80+2.50) TBA	9.70	3100 TBA	13.6	3.13	B	(1.80+1.80+1.80)+(2.00+2.00+3.20) TBA	12.60	3380 TBA	14.8	3.73	A
	(1.2+1.2+1.2)+(1.8+1.8+5.0)	12.2	(1.20+1.20+1.20)+(1.30+1.30+3.70) TBA	9.90	3175 TBA	13.9	3.12	B	(1.80+1.80+1.80)+(1.60+1.60+4.00) TBA	12.60	3380 TBA	14.8	3.73	A

POSSIBLE COMBINATIONS TO OPERATE		COOLING							HEATING					
		TOTAL (kW)	CAPACITY RATING (kW) (RANGE)	OUTDOOR UNIT TOTAL	OUTDOOR UNIT TOTAL INPUT (W)	OUTDOOR UNIT AMPERE(A) at 230V	EER	Class	CAPACITY RATING (kW) (RANGE)	OUTDOOR UNIT TOTAL	OUTDOOR UNIT TOTAL INPUT (W)	OUTDOOR UNIT AMPERE(A) at 230V	COP	Class
SIX UNITS	(1.2+1.2+1.2) + (1.8+2.5+3.5)	11.4	(1.20+1.20+ 1.20)+(1.50+ 2.00+2.80)	9.90	3175	13.9	3.12	B	(1.80+1.80+ 1.80)+(1.60+ 2.50+3.10)	12.60	3380	14.8	3.73	A
			TBA		TBA				TBA		TBA			
	(1.2+1.2+1.2) + (2.5+2.5+2.5)	11.1	(1.20+1.20+ 1.20)+(2.10+ 2.10+2.10)	9.90	3175	13.9	3.12	B	(1.80+1.80+ 1.80)+(2.40+ 2.40+2.40)	12.60	3380	14.8	3.73	A
			TBA		TBA				TBA		TBA			
	(1.2+1.2+1.8) + (1.2+1.2+1.2)	7.8	(1.20+1.20+ 1.80)+(1.20+ 1.20+1.20)	7.80	2330	10.2	3.35	A	(1.80+1.80+ 2.50)+(1.80+ 1.80+1.80)	11.50	3060	13.4	3.76	A
			TBA		TBA				TBA		TBA			
	(1.2+1.2+1.8) + (1.2+1.2+2.5)	9.1	(1.20+1.20+ 1.80)+(1.20+ 1.20+2.50)	9.10	2700	11.9	3.37	A	(1.80+1.80+ 2.50)+(1.73+ 1.73+3.74)	13.30	3480	15.3	3.82	A
			TBA		TBA				TBA		TBA			
	(1.2+1.2+1.8) + (1.2+1.8+2.5)	9.7	(1.20+1.20+ 1.80)+(1.20+ 1.80+2.50)	9.70	3030	13.3	3.20	A	(1.80+1.80+ 2.50)+(1.58+ 2.20+3.42)	13.30	3480	15.3	3.82	A
			TBA		TBA				TBA		TBA			
	(1.2+1.2+1.8) + (1.2+1.8+5.0)	12.2	(1.20+1.20+ 1.80)+(0.95+ 1.42+3.94)	10.50	3345	14.7	3.14	B	(1.80+1.80+ 2.50)+(1.20+ 1.67+4.33)	13.30	3480	15.3	3.82	A
			TBA		TBA				TBA		TBA			
	(1.2+1.2+1.8) + (1.2+2.5+3.5)	11.4	(1.20+1.20+ 1.80)+(1.05+ 2.19+3.06)	10.50	3345	14.7	3.14	B	(1.80+1.80+ 2.50)+(1.23+ 2.67+3.29)	13.30	3480	15.3	3.82	A
			TBA		TBA				TBA		TBA			
	(1.2+1.2+1.8 + (1.8+1.8+1.8)	9.6	(1.20+1.20+ 1.80)+(1.80+ 1.80+1.80)	9.60	3030	13.3	3.17	B	(1.80+1.80+ 2.50)+(2.33+ 2.33+2.33)	13.10	3430	15.1	3.82	A
			TBA		TBA				TBA		TBA			
	(1.2+1.2+1.8) + (1.8+1.8+3.5)	11.3	(1.20+1.20+ 1.80)+(1.60+ 1.60+3.10)	10.50	3345	14.7	3.14	B	(1.80+1.80+ 2.50)+(1.85+ 1.85+3.50)	13.30	3480	15.3	3.82	A
			TBA		TBA				TBA		TBA			
	(1.2+1.2+1.8) + (1.8+2.5+2.5)	11	(1.20+1.20+ 1.80)+(1.70+ 2.30+2.30)	10.50	3345	14.7	3.14	B	(1.80+1.80+ 2.50)+(1.80+ 2.70+2.70)	13.30	3480	15.3	3.82	A
			TBA		TBA				TBA		TBA			
	(1.2+1.2+1.8) + (1.8+3.5+3.5)	13	(1.20+1.20+ 1.80)+(1.30+ 2.50+2.50)	10.50	3345	14.7	3.14	B	(1.80+1.80+ 2.50)+(1.40+ 2.90+2.90)	13.30	3480	15.3	3.82	A
			TBA		TBA				TBA		TBA			
	(1.2+1.2+1.8) + (2.5+2.5+3.5)	12.7	(1.20+1.20+ 1.80)+(1.85+ 1.85+2.60)	10.50	3345	14.7	3.14	B	(1.80+1.80+ 2.50)+(2.23+ 2.23+2.74)	13.30	3480	15.3	3.82	A
			TBA		TBA				TBA		TBA			
	(1.2+1.2+2.5) + (1.2+1.2+1.8)	9.1	(1.20+1.20+ 2.50)+(1.20+ 1.20+1.80)	9.10	2700	11.9	3.37	A	(1.73+1.73+ 3.74)+(1.80+ 1.80+2.50)	13.30	3480	15.3	3.82	A
			TBA		TBA				TBA		TBA			
	(1.2+1.2+2.5) + (1.2+1.2+3.5)	10.8	(1.20+1.20+ 2.50)+(1.20+ 1.20+3.50)	10.80	2975	13.1	3.63	A	(1.73+1.73+ 3.74)+(1.54+ 1.54+4.11)	14.40	3800	16.7	3.79	A
			TBA		TBA				TBA		TBA			
	(1.2+1.2+2.5) + (1.2+1.8+1.8)	9.7	(1.20+1.20+ 2.50)+(1.20+ 1.80+1.80)	9.70	2870	12.6	3.38	A	(1.73+1.73+ 3.74)+(1.80+ 2.50+2.50)	14.00	3650	16.0	3.84	A
			TBA		TBA				TBA		TBA			
	(1.2+1.2+2.5) + (1.2+2.5+2.5)	11.1	(1.20+1.20+ 2.50)+(1.20+ 2.50+2.50)	11.10	3470	15.2	3.20	B	(1.73+1.73+ 3.74)+(1.35+ 2.93+2.93)	14.40	3800	16.7	3.79	A
			TBA		TBA				TBA		TBA			

	POSSIBLE COMBINATIONS TO OPERATE	COOLING							HEATING					
		TOTAL (kW)	CAPACITY RATING (kW) (RANGE)	OUTDOOR UNIT TOTAL	OUTDOOR UNIT TOTAL INPUT (W)	OUTDOOR UNIT AMPERE(A) at 230V	EER	Class	CAPACITY RATING (kW) (RANGE)	OUTDOOR UNIT TOTAL	OUTDOOR UNIT TOTAL INPUT (W)	OUTDOOR UNIT AMPERE(A) at 230V	COP	Class
SIX UNITS	(1.2+1.2+2.5) + (1.2+3.5+3.5)	13.1	(1.20+1.20+2.50)+(0.92+2.69+2.69)	11.20	3545	15.6	3.16	B	(1.73+1.73+3.74)+(1.14+3.03+3.03)	14.40	3800	16.7	3.79	A
			TBA		TBA				TBA		TBA			
	(1.2+1.2+2.5) + (1.8+1.8+2.5)	11	(1.20+1.20+2.50)+(1.80+1.80+2.50)	11.00	3470	15.2	3.17	B	(1.73+1.73+3.74)+(2.00+2.00+3.20)	14.40	3800	16.7	3.79	A
			TBA		TBA				TBA		TBA			
	(1.2+1.2+2.5) + (1.8+1.8+5.0)	13.5	(1.20+1.20+2.50)+(1.30+1.30+3.70)	11.20	3545	15.6	3.16	B	(1.73+1.73+3.74)+(1.60+1.60+4.00)	14.40	3800	16.7	3.79	A
			TBA		TBA				TBA		TBA			
	(1.2+1.2+2.5) + (1.8+2.5+3.5)	12.7	(1.20+1.20+2.50)+(1.50+2.00+2.80)	11.20	3545	15.6	3.16	B	(1.73+1.73+3.74)+(1.60+2.50+3.10)	14.40	3800	16.7	3.79	A
			TBA		TBA				TBA		TBA			
	(1.2+1.2+2.5) + (2.5+2.5+2.5)	12.4	(1.20+1.20+2.50)+(2.10+2.10+2.10)	11.20	3545	15.6	3.16	B	(1.73+1.73+3.74)+(2.40+2.40+2.40)	14.40	3800	16.7	3.79	A
			TBA		TBA				TBA		TBA			
	(1.2+1.2+3.5) + (1.2+1.2+1.2)	9.5	(1.20+1.20+3.50)+(1.20+1.20+1.20)	9.50	2605	11.4	3.65	A	(1.54+1.54+4.11)+(1.80+1.80+1.80)	12.60	3380	14.8	3.73	A
			TBA		TBA				TBA		TBA			
	(1.2+1.2+3.5) + (1.2+1.2+2.5)	10.8	(1.20+1.20+3.50)+(1.20+1.20+2.50)	10.80	2975	13.1	3.63	A	(1.54+1.54+4.11)+(1.73+1.73+3.74)	14.40	3800	16.7	3.79	A
			TBA		TBA				TBA		TBA			
	(1.2+1.2+3.5) + (1.2+1.2+5.0)	13.3	(1.20+1.20+3.50)+(1.02+1.02+4.26)	12.20	3620	15.9	3.37	A	(1.54+1.54+4.11)+(1.28+1.28+4.63)	14.40	3800	16.7	3.79	A
			TBA		TBA				TBA		TBA			
	(1.2+1.2+3.5) + (1.2+1.8+2.5)	11.4	(1.20+1.20+3.50)+(1.20+1.80+2.50)	11.40	3305	14.5	3.45	A	(1.54+1.54+4.11)+(1.58+2.20+3.42)	14.40	3800	16.7	3.79	A
			TBA		TBA				TBA		TBA			
	(1.2+1.2+3.5) + (1.2+1.8+5.0)	13.9	(1.20+1.20+3.50)+(0.95+1.42+3.94)	12.20	3620	15.9	3.37	A	(1.54+1.54+4.11)+(1.20+1.67+4.33)	14.40	3800	16.7	3.79	A
			TBA		TBA				TBA		TBA			
	(1.2+1.2+3.5) + (1.8+1.8+1.8)	11.3	(1.20+1.20+3.50)+(1.80+1.80+1.80)	11.30	3305	14.5	3.42	A	(1.54+1.54+4.11)+(2.33+2.33+2.33)	14.20	3750	16.5	3.79	A
			TBA		TBA				TBA		TBA			
	(1.2+1.2+3.5) + (1.8+1.8+3.5)	13.0	(1.20+1.20+3.50)+(1.60+1.60+3.10)	12.20	3620	15.9	3.37	A	(1.54+1.54+4.11)+(1.85+1.85+3.50)	14.40	3800	16.7	3.79	A
			TBA		TBA				TBA		TBA			
	(1.2+1.2+3.5) + (1.8+2.5+2.5)	12.7	(1.20+1.20+3.50)+(1.70+2.30+2.30)	12.20	3620	15.9	3.37	A	(1.54+1.54+4.11)+(1.80+2.70+2.70)	14.40	3800	16.7	3.79	A
			TBA		TBA				TBA		TBA			
	(1.2+1.2+3.5) + (1.8+3.5+3.5)	14.7	(1.20+1.20+3.50)+(1.30+2.50+2.50)	12.20	3620	15.9	3.37	A	(1.54+1.54+4.11)+(1.40+2.90+2.90)	14.40	3800	16.7	3.79	A
			TBA		TBA				TBA		TBA			
	(1.2+1.2+3.5) + (2.5+2.5+3.5)	14.4	(1.20+1.20+3.50)+(1.85+1.85+2.60)	12.20	3620	15.9	3.37	A	(1.54+1.54+4.11)+(2.23+2.23+2.74)	14.40	3800	16.7	3.79	A
			TBA		TBA				TBA		TBA			
	(1.2+1.2+5.0) + (1.2+1.2+1.8)	11.6	(1.02+1.02+4.26)+(1.20+1.20+1.80)	10.50	3345	14.7	3.14	B	(1.28+1.28+4.63)+(1.80+1.80+2.50)	13.30	3480	15.3	3.82	A
			TBA		TBA				TBA		TBA			
	(1.2+1.2+5.0) + (1.2+1.2+3.5)	13.3	(1.02+1.02+4.26)+(1.20+1.20+3.50)	12.20	3620	15.9	3.37	A	(1.28+1.28+4.63)+(1.54+1.54+4.11)	14.40	3800	16.7	3.79	A
			TBA		TBA				TBA		TBA			

	POSSIBLE COMBINATIONS TO OPERATE	COOLING							HEATING					
		TOTAL (kW)	CAPACITY RATING (kW) (RANGE)	OUTDOOR UNIT TOTAL	OUTDOOR UNIT TOTAL INPUT (W)	OUTDOOR UNIT AMPERE (A) at 230V	EER	Class	CAPACITY RATING (kW) (RANGE)	OUTDOOR UNIT TOTAL	OUTDOOR UNIT TOTAL INPUT (W)	OUTDOOR UNIT AMPERE (A) at 230V	COP	Class
SIX UNITS	(1.2+1.2+5.0)+(1.2+1.8+1.8)	12.2	(1.02+1.02+4.26)+(1.20+1.80+1.80)	11.10	3515	15.4	3.16	B	(1.28+1.28+4.63)+(1.80+2.50+2.50)	14.00	3650	16.0	3.84	A
			TBA		TBA				TBA		TBA			
	(1.2+1.2+5.0)+(1.2+1.8+3.5)	13.9	(1.02+1.02+4.26)+(1.16+1.74+3.39)	12.60	4115	18.1	3.06	B	(1.28+1.28+4.63)+(1.42+1.98+3.80)	14.40	3800	16.7	3.79	A
			TBA		TBA				TBA		TBA			
	(1.2+1.2+5.0)+(1.2+2.5+2.5)	13.6	(1.02+1.02+4.26)+(1.20+2.50+2.50)	12.50	4115	18.1	3.04	B	(1.28+1.28+4.63)+(1.35+2.93+2.93)	14.40	3800	16.7	3.79	A
			TBA		TBA				TBA		TBA			
	(1.2+1.2+5.0)+(1.2+3.5+3.5)	15.6	(1.02+1.02+4.26)+(0.92+2.69+2.69)	12.60	4190	18.4	3.01	B	(1.28+1.28+4.63)+(1.14+3.03+3.03)	14.40	3800	16.7	3.79	A
			TBA		TBA				TBA		TBA			
	(1.2+1.2+5.0)+(1.8+1.8+5.0)	16.0	(1.02+1.02+4.26)+(1.30+1.30+3.70)	12.60	4190	18.4	3.01	B	(1.28+1.28+4.63)+(1.60+1.60+4.00)	14.40	3800	16.7	3.79	A
			TBA		TBA				TBA		TBA			
	(1.2+1.2+5.0)+(1.8+2.5+3.5)	15.2	(1.02+1.02+4.26)+(1.50+2.00+2.80)	12.60	4190	18.4	3.01	B	(1.28+1.28+4.63)+(1.60+2.50+3.10)	14.40	3800	16.7	3.79	A
			TBA		TBA				TBA		TBA			
	(1.2+1.2+5.0)+(2.5+2.5+2.5)	14.9	(1.02+1.02+4.26)+(2.10+2.10+2.10)	12.60	4190	18.4	3.01	B	(1.28+1.28+4.63)+(2.40+2.40+2.40)	14.40	3800	16.7	3.79	A
			TBA		TBA				TBA		TBA			
	(1.2+1.8+1.8)+(1.2+1.2+1.2)	8.4	(1.20+1.80+1.80)+(1.20+1.20+1.20)	8.40	2500	11.0	3.36	A	(1.80+2.50+2.50)+(1.80+1.80+1.80)	12.20	3230	14.2	3.78	A
			TBA		TBA				TBA		TBA			
	(1.2+1.8+1.8)+(1.2+1.2+2.5)	9.7	(1.20+1.80+1.80)+(1.20+1.20+2.50)	9.70	2870	12.6	3.38	A	(1.80+2.50+2.50)+(1.73+1.73+3.74)	14.00	3650	16.0	3.84	A
			TBA		TBA				TBA		TBA			
	(1.2+1.8+1.8)+(1.2+1.2+5.0)	12.2	(1.20+1.80+1.80)+(1.02+1.02+4.26)	11.10	3515	15.4	3.16	B	(1.80+2.50+2.50)+(1.28+1.28+4.63)	14.00	3650	16.0	3.84	A
			TBA		TBA				TBA		TBA			
	(1.2+1.8+1.8)+(1.2+1.8+2.5)	10.3	(1.20+1.80+1.80)+(1.20+1.80+2.50)	10.30	3200	14.1	3.22	A	(1.80+2.50+2.50)+(1.58+2.20+3.42)	14.00	3650	16.0	3.84	A
			TBA		TBA				TBA		TBA			
	(1.2+1.8+1.8)+(1.2+1.8+5.0)	12.8	(1.20+1.80+1.80)+(0.95+1.42+3.94)	11.10	3515	15.4	3.16	B	(1.80+2.50+2.50)+(1.20+1.67+4.33)	14.00	3650	16.0	3.84	A
			TBA		TBA				TBA TBA		TBA			
	(1.2+1.8+1.8)+(1.2+2.5+3.5)	12.0	(1.20+1.80+1.80)+(1.05+2.19+3.06)	11.10	3515	15.4	3.16	B	(1.80+2.50+2.50)+(1.23+2.67+3.29)	14.00	3650	16.0	3.84	A
			TBA		TBA				TBA		TBA			
	(1.2+1.8+1.8)+(1.8+1.8+1.8)	10.2	(1.20+1.80+1.80)+(1.80+1.80+1.80)	10.20	3200	14.1	3.19	B	(1.80+2.50+2.50)+(2.33+2.33+2.33)	13.80	3600	15.8	3.83	A
			TBA		TBA				TBA		TBA			
	(1.2+1.8+1.8)+(1.8+1.8+3.5)	11.9	(1.20+1.80+1.80)+(1.60+1.60+3.10)	11.10	3515	15.4	3.16	B	(1.80+2.50+2.50)+(1.85+1.85+3.50)	14.00	3650	16.0	3.84	A
			TBA		TBA				TBA		TBA			

POSSIBLE COMBINATIONS TO OPERATE		COOLING							HEATING					
		TOTAL (kW)	CAPACITY RATING (kW) (RANGE)	OUTDOOR UNIT TOTAL	OUTDOOR UNIT TOTAL INPUT (W)	OUTDOOR UNIT AMPERE (A) at 230V	EER	Class	CAPACITY RATING (kW) (RANGE)	OUTDOOR UNIT TOTAL	OUTDOOR UNIT TOTAL INPUT (W)	OUTDOOR UNIT AMPERE (A) at 230V	COP	Class
SIX UNITS	(1.2+1.8+1.8)+(1.8+3.5+3.5)	13.6	(1.20+1.80+1.80)+(1.30+2.50+2.50)	11.10	3515	15.4	3.16	B	(1.80+2.50+2.50)+(1.40+2.90+2.90)	14.00	3650	16.0	3.84	A
			TBA		TBA				TBA		TBA			
	(1.2+1.8+1.8)+(2.5+2.5+3.5)	13.3	(1.20+1.80+1.80)+(1.85+1.85+2.60)	11.10	3515	15.4	3.16	B	(1.80+2.50+2.50)+(2.23+2.23+2.74)	14.00	3650	16.0	3.84	A
			TBA		TBA				TBA		TBA			
	(1.2+1.8+2.5)+(1.2+1.2+1.8)	9.7	(1.20+1.80+2.50)+(1.20+1.20+1.80)	9.70	3030	13.3	3.20	A	(1.58+2.20+3.42)+(1.80+1.80+2.50)	13.30	3480	15.3	3.82	A
			TBA		TBA				TBA		TBA			
	(1.2+1.8+2.5)+(1.2+1.2+3.5)	11.4	(1.20+1.80+2.50)+(1.20+1.20+3.50)	11.40	3305	14.5	3.45	A	(1.58+2.20+3.42)+(1.54+1.54+4.11)	14.40	3800	16.7	3.79	A
			TBA		TBA				TBA		TBA			
	(1.2+1.8+2.5)+(1.2+1.8+1.8)	10.3	(1.20+1.80+2.50)+(1.20+1.80+1.80)	10.30	3200	14.1	3.22	A	(1.58+2.20+3.42)+(1.80+2.50+2.50)	14.00	3650	16.0	3.84	A
			TBA		TBA				TBA		TBA			
	(1.2+1.8+2.5)+(1.2+1.8+3.5)	12.0	(1.20+1.80+2.50)+(1.16+1.74+3.39)	11.80	3800	16.7	3.11	B	(1.58+2.20+3.42)+(1.42+1.98+3.80)	14.40	3800	16.7	3.79	A
			TBA		TBA				TBA		TBA			
	(1.2+1.8+2.5)+(1.2+2.5+2.5)	11.7	(1.20+1.80+2.50)+(1.20+2.50+2.50)	11.70	3800	16.7	3.08	B	(1.58+2.20+3.42)+(1.35+2.93+2.93)	14.40	3800	16.7	3.79	A
			TBA		TBA				TBA		TBA			
	(1.2+1.8+2.5)+(1.2+3.5+3.5)	13.7	(1.20+1.80+2.50)+(0.92+2.69+2.69)	11.80	3875	17.0	3.05	B	(1.58+2.20+3.42)+(1.14+3.03+3.03)	14.40	3800	16.7	3.79	A
			TBA		TBA				TBA		TBA			
	(1.2+1.8+2.5)+(1.8+1.8+2.5)	11.6	(1.20+1.80+2.50)+(1.80+1.80+2.50)	11.60	3800	16.7	3.05	B	(1.58+2.20+3.42)+(2.00+2.00+3.20)	14.40	3800	16.7	3.79	A
			TBA		TBA				TBA		TBA			
	(1.2+1.8+2.5)+(1.8+1.8+5.0)	14.1	(1.20+1.80+2.50)+(1.30+1.30+3.70)	11.80	3875	17.0	3.05	B	(1.58+2.20+3.42)+(1.60+1.60+4.00)	14.40	3800	16.7	3.79	A
			TBA		TBA				TBA		TBA			
	(1.2+1.8+2.5)+(1.8+2.5+3.5)	13.3	(1.20+1.80+2.50)+(1.50+2.00+2.80)	11.80	3875	17.0	3.05	B	(1.58+2.20+3.42)+(1.60+2.50+3.10)	14.40	3800	16.7	3.79	A
			TBA		TBA				TBA		TBA			
	(1.2+1.8+3.5)+(1.2+1.2+1.2)	10.1	(1.16+1.74+3.39)+(1.20+1.20+1.20)	9.90	3100	13.6	3.19	B	(1.42+1.98+3.80)+(1.80+1.80+1.80)	12.60	3380	14.8	3.73	A
			TBA		TBA				TBA		TBA			
	(1.2+1.8+3.5)+(1.2+1.2+2.5)	11.4	(1.16+1.74+3.39)+(1.20+1.20+2.50)	11.20	3470	15.2	3.23	A	(1.42+1.98+3.80)+(1.73+1.73+3.74)	14.40	3800	16.7	3.79	A
			TBA		TBA				TBA		TBA			
	(1.2+1.8+3.5)+(1.2+1.2+5.0)	13.9	(1.16+1.74+3.39)+(1.02+1.02+4.26)	12.60	4115	18.1	3.06	B	(1.42+1.98+3.80)+(1.28+1.28+4.63)	14.40	3800	16.7	3.79	A
			TBA		TBA				TBA		TBA			
	(1.2+1.8+3.5)+(1.2+1.8+2.5)	12.0	(1.16+1.74+3.39)+(1.20+1.80+2.50)	11.80	3800	16.7	3.11	B	(1.42+1.98+3.80)+(1.58+2.20+3.42)	14.40	3800	16.7	3.79	A
			TBA		TBA				TBA		TBA			

	POSSIBLE COMBINATIONS TO OPERATE	COOLING							HEATING					
		TOTAL (kW)	CAPACITY RATING (kW) (RANGE)	OUTDOOR UNIT			EER	Class	CAPACITY RATING (kW) (RANGE)	OUTDOOR UNIT			COP	Class
				TOTAL	TOTAL INPUT (W)	AMPERE (A) at 230V				TOTAL	TOTAL INPUT (W)	AMPERE (A) at 230V		
SIX UNITS	(1.2+1.8+3.5)+(1.2+1.8+5.0)	14.5	(1.16+1.74+3.39)+(0.95+1.42+3.94)	12.60	4115	18.1	3.06	B	(1.42+1.98+3.80)+(1.20+1.67+4.33)	14.40	3800	16.7	3.79	A
			TBA		TBA				TBA		TBA			
	(1.2+1.8+3.5)+(1.2+2.5+3.5)	13.7	(1.16+1.74+3.39)+(1.05+2.19+3.06)	12.60	4115	18.1	3.06	B	(1.42+1.98+3.80)+(1.23+2.67+3.29)	14.40	3800	16.7	3.79	A
			TBA		TBA				TBA		TBA			
	(1.2+1.8+3.5)+(1.8+1.8+1.8)	11.9	(1.16+1.74+3.39)+(1.80+1.80+1.80)	11.70	3800	16.7	3.08	B	(1.42+1.98+3.80)+(2.33+2.33+2.33)	14.20	3750	16.5	3.79	A
			TBA		TBA				TBA		TBA			
	(1.2+1.8+3.5)+(1.8+1.8+3.5)	13.6	(1.16+1.74+3.39)+(1.60+1.60+3.10)	12.60	4115	18.1	3.06	B	(1.42+1.98+3.80)+(1.85+1.85+3.50)	14.40	3800	16.7	3.79	A
			TBA		TBA				TBA		TBA			
	(1.2+1.8+3.5)+(1.8+2.5+2.5)	13.3	(1.16+1.74+3.39)+(1.70+2.30+2.30)	12.60	4115	18.1	3.06	B	(1.42+1.98+3.80)+(1.80+2.70+2.70)	14.40	3800	16.7	3.79	A
			TBA		TBA				TBA		TBA			
	(1.2+1.8+3.5)+(1.8+3.5+3.5)	15.3	(1.16+1.74+3.39)+(1.30+2.50+2.50)	12.60	4115	18.1	3.06	B	(1.42+1.98+3.80)+(1.40+2.90+2.90)	14.40	3800	16.7	3.79	A
			TBA		TBA				TBA		TBA			
	(1.2+1.8+3.5)+(2.5+2.5+3.5)	15.0	(1.16+1.74+3.39)+(1.85+1.85+2.60)	12.60	4115	18.1	3.06	B	(1.42+1.98+3.80)+(2.23+2.23+2.74)	14.40	3800	16.7	3.79	A
			TBA		TBA				TBA		TBA			
	(1.2+1.8+5.0)+(1.2+1.2+3.5)	13.9	(0.95+1.42+3.94)+(1.20+1.20+3.50)	12.20	3620	15.9	3.37	A	(1.20+1.67+4.33)+(1.54+1.54+4.11)	14.40	3800	16.7	3.79	A
			TBA		TBA				TBA		TBA			
	(1.2+1.8+5.0)+(1.2+1.8+1.8)	12.8	(0.95+1.42+3.94)+(1.20+1.80+1.80)	11.10	3515	15.4	3.16	B	(1.20+1.67+4.33)+(1.80+2.50+2.50)	14.00	3650	16.0	3.84	A
			TBA		TBA				TBA		TBA			
	(1.2+1.8+5.0)+(1.2+1.8+3.5)	14.5	(0.95+1.42+3.94)+(1.16+1.74+3.39)	12.60	4115	18.1	3.06	B	(1.20+1.67+4.33)+(1.42+1.98+3.80)	14.40	3800	16.7	3.79	A
			TBA		TBA				TBA		TBA			
	(1.2+1.8+5.0)+(1.2+2.5+2.5)	14.2	(0.95+1.42+3.94)+(1.20+2.50+2.50)	12.50	4115	18.1	3.04	B	(1.20+1.67+4.33)+(1.35+2.93+2.93)	14.40	3800	16.7	3.79	A
			TBA		TBA				TBA		TBA			
	(1.2+1.8+5.0)+(1.2+3.5+3.5)	16.2	(0.95+1.42+3.94)+(0.92+2.69+2.69)	12.60	4190	18.4	3.01	B	(1.20+1.67+4.33)+(1.14+3.03+3.03)	14.40	3800	16.7	3.79	A
			TBA		TBA				TBA		TBA			
	(1.2+1.8+5.0)+(1.8+1.8+2.5)	14.1	(0.95+1.42+3.94)+(1.80+1.80+2.50)	12.40	4115	18.1	3.01	B	(1.20+1.67+4.33)+(2.00+2.00+3.20)	14.40	3800	16.7	3.79	A
			TBA		TBA				TBA		TBA			
	(1.2+1.8+5.0)+(1.8+1.8+5.0)	16.6	(0.95+1.42+3.94)+(1.30+1.30+3.70)	12.60	4190	18.4	3.01	B	(1.20+1.67+4.33)+(1.60+1.60+4.00)	14.40	3800	16.7	3.79	A
			TBA		TBA				TBA		TBA			
	(1.2+1.8+5.0)+(1.8+2.5+3.5)	15.8	(0.95+1.42+3.94)+(1.50+2.00+2.80)	12.60	4190	18.4	3.01	B	(1.20+1.67+4.33)+(1.60+2.50+3.10)	14.40	3800	16.7	3.79	A
			TBA		TBA				TBA		TBA			

POSSIBLE COMBINATIONS TO OPERATE		COOLING							HEATING					
		TOTAL (kW)	CAPACITY RATING (kW) (RANGE)	OUTDOOR UNIT TOTAL	OUTDOOR UNIT TOTAL INPUT (W)	OUTDOOR UNIT AMPERE (A) at 230V	EER	Class	CAPACITY RATING (kW) (RANGE)	OUTDOOR UNIT TOTAL	OUTDOOR UNIT TOTAL INPUT (W)	OUTDOOR UNIT AMPERE (A) at 230V	COP	Class
SIX UNITS	(1.2+1.8+5.0)+(2.5+2.5+2.5)	15.5	(0.95+1.42+3.94)+(2.10+2.10+2.10)	12.60	4190	18.4	3.01	B	(1.20+1.67+4.33)+(2.40+2.40+2.40)	14.40	3800	16.7	3.79	A
			TBA		TBA				TBA		TBA			
	(1.2+2.5+2.5)+(1.2+1.2+1.2)	9.8	(1.20+2.50+2.50)+(1.20+1.20+1.20)	9.80	3100	13.6	3.16	B	(1.35+2.93+2.93)+(1.80+1.80+1.80)	12.60	3380	14.8	3.73	A
			TBA		TBA				TBA TBA		TBA			
	(1.2+2.5+2.5)+(1.2+1.2+2.5)	11.1	(1.20+2.50+2.50)+(1.20+1.20+2.50)	11.10	3470	15.2	3.20	B	(1.35+2.93+2.93)+(1.73+1.73+3.74)	14.40	3800	16.7	3.79	A
			TBA		TBA				TBA		TBA			
	(1.2+2.5+2.5)+(1.2+1.8+2.5)	11.7	(1.20+2.50+2.50)+(1.20+1.80+2.50)	11.70	3800	16.7	3.08	B	(1.35+2.93+2.93)+(1.58+2.20+3.42)	14.40	3800	16.7	3.79	A
			TBA		TBA				TBA		TBA			
	(1.2+2.5+2.5)+(1.2+1.8+5.0)	14.2	(1.20+2.50+2.50)+(0.95+1.42+3.94)	12.50	4115	18.1	3.04	B	(1.35+2.93+2.93)+(1.20+1.7+4.33)	14.40	3800	16.7	3.79	A
			TBA		TBA				TBA		TBA			
	(1.2+2.5+2.5)+(1.2+2.5+3.5)	13.4	(1.20+2.50+2.50)+(1.05+2.19+3.06)	12.50	4115	18.1	3.04	B	(1.35+2.93+2.93)+(1.23+2.67+3.29)	14.40	3800	16.7	3.79	A
			TBA		TBA				TBA		TBA			
	(1.2+2.5+2.5)+(1.8+1.8+1.8)	11.6	(1.20+2.50+2.50)+(1.80+1.80+1.80)	11.60	3800	16.7	3.05	B	(1.35+2.93+2.93)+(2.33+2.33+2.33)	14.20	3750	16.5	3.79	A
			TBA		TBA				TBA		TBA			
	(1.2+2.5+2.5)+(1.8+1.8+3.5)	13.3	(1.20+2.50+2.50)+(1.60+1.60+3.10)	12.50	4115	18.1	3.04	B	(1.35+2.93+2.93)+(1.85+1.85+3.50)	14.40	3800	16.7	3.79	A
			TBA		TBA				TBA		TBA			
	(1.2+2.5+2.5)+(1.8+2.5+2.5)	13.0	(1.20+2.50+2.50)+(1.70+2.30+2.30)	12.50	4115	18.1	3.04	B	(1.35+2.93+2.93)+(1.80+2.70+2.70)	14.40	3800	16.7	3.79	A
			TBA		TBA				TBA		TBA			
	(1.2+2.5+2.5)+(1.8+3.5+3.5)	15.0	(1.20+2.50+2.50)+(1.30+2.50+2.50)	12.50	4115	18.1	3.04	B	(1.35+2.93+2.93)+(1.40+2.90+2.90)	14.40	3800	16.7	3.79	A
			TBA		TBA				TBA		TBA			
	(1.2+2.5+2.5)+(2.5+2.5+3.5)	14.7	(1.20+2.50+2.50)+(1.85+1.85+2.60)	12.50	4115	18.1	3.04	B	(1.35+2.93+2.93)+(2.23+2.23+2.74)	14.40	3800	16.7	3.79	A
			TBA		TBA				TBA		TBA			
	(1.2+2.5+3.5)+(1.2+1.2+1.8)	11.4	(1.05+2.19+3.06)+(1.20+1.20+1.80)	10.50	3345	14.7	3.14	B	(1.23+2.67+3.29)+(1.80+1.80+2.50)	13.30	3480	15.3	3.82	A
			TBA		TBA				TBA		TBA			
	(1.2+2.5+3.5)+(1.2+1.2+3.5)	13.1	(1.05+2.19+3.06)+(1.20+1.20+3.50)	12.20	3620	15.9	3.37	A	(1.23+2.67+3.29)+(1.54+1.54+4.11)	14.40	3800	16.7	3.79	A
			TBA		TBA				TBA		TBA			
	(1.2+2.5+3.5)+(1.2+1.8+1.8)	12.0	(1.05+2.19+3.06)+(1.20+1.80+1.80)	11.10	3515	15.4	3.16	B	(1.23+2.67+3.29)+(1.80+2.50+2.50)	14.00	3650	16.0	3.84	A
			TBA		TBA				TBA		TBA			
	(1.2+2.5+3.5)+(1.2+2.5+2.5)	13.4	(1.05+2.19+3.06)+(1.20+2.50+2.50)	12.50	4115	18.1	3.04	B	(1.23+2.67+3.29)+(1.35+2.93+2.93)	14.40	3800	16.7	3.79	A
			TBA		TBA				TBA		TBA			

POSSIBLE COMBINATIONS TO OPERATE		COOLING							HEATING					
		TOTAL (kW)	CAPACITY RATING (kW) (RANGE)	OUTDOOR UNIT TOTAL	OUTDOOR UNIT TOTAL INPUT (W)	OUTDOOR UNIT AMPERE (A) at 230V	EER	Class	CAPACITY RATING (kW) (RANGE)	OUTDOOR UNIT TOTAL	OUTDOOR UNIT TOTAL INPUT (W)	OUTDOOR UNIT AMPERE (A) at 230V	COP	Class
SIX UNITS	(1.2+2.5+3.5)+(1.2+3.5+3.5)	15.4	(1.05+2.19+3.06)+(0.92+2.69+2.69)	12.60	4190	18.4	3.01	B	(1.23+2.67+3.29)+(1.14+3.03+3.03)	14.40	3800	16.7	3.79	A
			TBA		TBA				TBA		TBA			
	(1.2+2.5+3.5)+(1.8+1.8+2.5)	13.3	(1.05+2.19+3.06)+(1.80+1.80+2.50)	12.40	4115	18.1	3.01	B	(1.23+2.67+3.29)+(2.00+2.00+3.20)	14.40	3800	16.7	3.79	A
			TBA		TBA				TBA		TBA			
	(1.2+2.5+3.5)+(1.8+1.8+5.0)	15.8	(1.05+2.19+3.06)+(1.30+1.30+3.70)	12.60	4190	18.4	3.01	B	(1.23+2.67+3.29)+(1.60+1.60+4.00)	14.40	3800	16.7	3.79	A
			TBA		TBA				TBA		TBA			
	(1.2+2.5+3.5)+(1.8+2.5+3.5)	15.0	(1.05+2.19+3.06)+(1.50+2.00+2.80)	12.60	4190	18.4	3.01	B	(1.23+2.67+3.29)+(1.60+2.50+3.10)	14.40	3800	16.7	3.79	A
			TBA		TBA				TBA		TBA			
	(1.2+2.5+3.5)+(2.5+2.5+2.5)	14.7	(1.05+2.19+3.06)+(2.10+2.10+2.10)	12.60	4190	18.4	3.01	B	(1.23+2.67+3.29)+(2.40+2.40+2.40)	14.40	3800	16.7	3.79	A
			TBA		TBA				TBA		TBA			
	(1.2+3.5+3.5)+(1.2+1.2+1.2)	11.8	(0.92+2.69+2.69)+(1.20+1.20+1.20)	9.90	3175	13.9	3.12	B	(1.14+3.03+3.03)+(1.80+1.80+1.80)	12.60	3380	14.8	3.73	A
			TBA		TBA				TBA		TBA			
	(1.2+3.5+3.5)+(1.2+1.2+2.5)	13.1	(0.92+2.69+2.69)+(1.20+1.20+2.50)	11.20	3545	15.6	3.16	B	(1.14+3.03+3.03)+(1.73+1.73+3.74)	14.40	3800	16.7	3.79	A
			TBA		TBA				TBA		TBA			
	(1.2+3.5+3.5)+(1.2+1.2+5.0)	15.6	(0.92+2.69+2.69)+(1.02+1.02+4.26)	12.60	4190	18.4	3.01	B	(1.14+3.03+3.03)+(1.28+1.28+4.63)	14.40	3800	16.7	3.79	A
			TBA		TBA				TBA		TBA			
	(1.2+3.5+3.5)+(1.2+1.8+2.5)	13.7	(0.92+2.69+2.69)+(1.20+1.80+2.50)	11.80	3875	17.0	3.05	B	(1.14+3.03+3.03)+(1.58+2.20+3.42)	14.40	3800	16.7	3.79	A
			TBA		TBA				TBA		TBA			
	(1.2+3.5+3.5)+(1.2+1.8+5.0)	16.2	(0.92+2.69+2.69)+(0.95+1.42+3.94)	12.60	4190	18.4	3.01	B	(1.14+3.03+3.03)+(1.20+1.67+4.33)	14.40	3800	16.7	3.79	A
			TBA		TBA				TBA		TBA			
	(1.2+3.5+3.5)+(1.8+1.8+1.8)	13.6	(0.92+2.69+2.69)+(1.80+1.80+1.80)	11.70	3875	17.0	3.02	B	(1.14+3.03+3.03)+(2.33+2.33+2.33)	14.20	3750	16.5	3.79	A
			TBA		TBA				TBA		TBA			
	(1.2+3.5+3.5)+(1.8+1.8+3.5)	15.3	(0.92+2.69+2.69)+(1.60+1.60+3.10)	12.60	4190	18.4	3.01	B	(1.14+3.03+3.03)+(1.85+1.85+3.50)	14.40	3800	16.7	3.79	A
			TBA		TBA				TBA		TBA			
	(1.2+3.5+3.5)+(1.8+2.5+2.5)	15.0	(0.92+2.69+2.69)+(1.70+2.30+2.30)	12.60	4190	18.4	3.01	B	(1.14+3.03+3.03)+(1.80+2.70+2.70)	14.40	3800	16.7	3.79	A
			TBA		TBA				TBA		TBA			
	(1.2+3.5+3.5)+(1.8+3.5+3.5)	17.0	(0.92+2.69+2.69)+(1.30+2.50+2.50)	12.60	4190	18.4	3.01	B	(1.14+3.03+3.03)+(1.40+2.90+2.90)	14.40	3800	16.7	3.79	A
			TBA		TBA				TBA		TBA			
	(1.2+3.5+3.5)+(2.5+2.5+3.5)	16.7	(0.92+2.69+2.69)+(1.85+1.85+2.60)	12.60	4190	18.4	3.01	B	(1.14+3.03+3.03)+(2.23+2.23+2.74)	14.40	3800	16.7	3.79	A
			TBA		TBA				TBA		TBA			
	(1.8+1.8+1.8)+(1.8+1.8+1.8)	10.8	(1.8+1.8+1.8)+(1.8+1.8+1.8)	10.80	3560	15.6	3.03	B	(2.333+2.333+2.333)+(2.333+2.333+2.333)	14.00	3700	16.2	3.78	A
			(1.5-12)		(200-4400)				(1.5-14.4)		(200-4220)			

POSSIBLE COMBINATIONS TO OPERATE		COOLING							HEATING					
		TOTAL (kW)	CAPACITY RATING (kW) (RANGE)	OUTDOOR UNIT TOTAL	OUTDOOR UNIT TOTAL INPUT (W)	OUTDOOR UNIT AMPERE (A) at 230V	EER	Class	CAPACITY RATING (kW) (RANGE)	OUTDOOR UNIT TOTAL	OUTDOOR UNIT TOTAL INPUT (W)	OUTDOOR UNIT AMPERE (A) at 230V	COP	Class
SIX UNITS	(1.8+1.8+1.8)+(1.8+1.8+2.5)	11.5	(1.8+1.8+1.8)+(1.8+1.8+2.5) (1.5-12.4)	11.50	3800 (200-4400)	16.7	3.03	B	(2.333+2.333+2.333)+(2+2+3.2) (1.5-14.4)	14.20	3750 (200-4220)	16.5	3.79	A
	(1.8+1.8+1.8)+(1.8+1.8+3.5)	12.5	(1.8+1.8+1.8)+(1.6+1.6+3.1) (1.5-12.6)	11.70	3875 (200-4400)	17.0	3.02	B	(2.333+2.333+2.333)+(1.85+1.85+3.5) (1.5-14.4)	14.20	3750 (200-4220)	16.5	3.79	A
	(1.8+1.8+1.8)+(1.8+1.8+5)	14.0	(1.8+1.8+1.8)+(1.3+1.3+3.7) (1.5-12.6)	11.70	3875 (200-4400)	17.0	3.02	B	(2.333+2.333+2.333)+(1.6+1.6+4) (1.5-14.4)	14.20	3750 (200-4220)	16.5	3.79	A
	(1.8+1.8+2.5)+(1.8+1.8+2.5)	12.2	(1.8+1.8+2.5)+(1.8+1.8+2.5) (1.5-12.8)	12.20	4040 (200-4400)	17.7	3.02	B	(2+2+3.2)+(2+2+3.2) (1.5-14.4)	14.40	3800 (200-4220)	16.7	3.79	A
	(1.8+1.8+2.5)+(1.8+1.8+3.5)	13.2	(1.8+1.8+2.5)+(1.6+1.6+3.1) (1.5-13)	12.40	4115 (200-4400)	18.1	3.01	B	(2+2+3.2)+(1.85+1.85+3.5) (1.5-14.4)	14.40	3800 (200-4220)	16.7	3.79	A
	(1.8+1.8+2.5)+(1.8+1.8+5)	14.7	(1.8+1.8+2.5)+(1.3+1.3+3.7) (1.5-13)	12.40	4115 (200-4400)	18.1	3.01	B	(2+2+3.2)+(1.6+1.6+4) (1.5-14.4)	14.40	3800 (200-4220)	16.7	3.79	A
	(1.8+1.8+3.5)+(1.8+1.8+3.5)	14.2	(1.6+1.6+3.1)+(1.6+1.6+3.1) (1.5-13.2)	12.60	4190 (200-4400)	18.4	3.01	B	(1.85+1.85+3.5)+(1.85+1.85+3.5) (1.5-14.4)	14.40	3800 (200-4220)	16.7	3.79	A
	(1.8+1.8+3.5)+(1.8+1.8+5)	15.7	(1.6+1.6+3.1)+(1.3+1.3+3.7) (1.5-13.2)	12.60	4190 (200-4400)	18.4	3.01	B	(1.85+1.85+3.5)+(1.6+1.6+4) (1.5-14.4)	14.40	3800 (200-4220)	16.7	3.79	A
	(1.8+1.8+5)+(1.8+1.8+5)	17.2	(1.3+1.3+3.7)+(1.3+1.3+3.7) (1.5-13.2)	12.60	4190 (200-4400)	18.4	3.01	B	(1.6+1.6+4)+(1.6+1.6+4) (1.5-14.4)	14.40	3800 (200-4220)	16.7	3.79	A
	(1.8+1.8+2.5)+(1.8+2.5+2.5)	12.9	(1.8+1.8+2.5)+(1.7+2.3+2.3) (1.5-13)	12.40	4115 (200-4400)	18.1	3.01	B	(2+2+3.2)+(1.8+2.7+2.7) (1.5-14.4)	14.40	3800 (200-4220)	16.7	3.79	A
	(1.8+1.8+2.5)+(1.8+2.5+3.5)	13.9	(1.8+1.8+2.5)+(1.5+2+2.8) (1.5-13)	12.40	4115 (200-4400)	18.1	3.01	B	(2+2+3.2)+(1.6+2.5+3.1) (1.5-14.4)	14.40	3800 (200-4220)	16.7	3.79	A
	(1.8+1.8+5)+(1.8+2.5+2.5)	15.4	(1.3+1.3+3.7)+(1.7+2.3+2.3) (1.5-13.2)	12.60	4190 (200-4400)	18.4	3.01	B	(1.6+1.6+4)+(1.8+2.7+2.7) (1.5-14.4)	14.40	3800 (200-4220)	16.7	3.79	A
	(1.8+1.8+3.5)+(1.8+2.5+3.5)	14.9	(1.6+1.6+3.1)+(1.5+2+2.8) (1.5-13.2)	12.60	4190 (200-4400)	18.4	3.01	B	(1.85+1.85+3.5)+(1.6+2.5+3.1) (1.5-14.4)	14.40	3800 (200-4220)	16.7	3.79	A
	(1.8+1.8+5)+(1.8+2.5+3.5)	16.4	(1.3+1.3+3.7)+(1.5+2+2.8) (1.5-13.2)	12.60	4190 (200-4400)	18.4	3.01	B	(1.6+1.6+4)+(1.6+2.5+3.1) (1.5-14.4)	14.40	3800 (200-4220)	16.7	3.79	A
	(1.8+1.8+3.5)+(1.8+3.5+3.5)	15.9	(1.6+1.6+3.1)+(1.3+2.5+2.5) (1.5-13.2)	12.60	4190 (200-4400)	18.4	3.01	B	(1.85+1.85+3.5)+(1.4+2.9+2.9) (1.5-14.4)	14.40	3800 (200-4220)	16.7	3.79	A
	(1.8+1.8+5)+(1.8+3.5+3.5)	17.4	(1.3+1.3+3.7)+(1.3+2.5+2.5) (1.5-13.2)	12.60	4190 (200-4400)	18.4	3.01	B	(1.6+1.6+4)+(1.4+2.9+2.9) (1.5-14.4)	14.40	3800 (200-4220)	16.7	3.79	A
	(1.8+2.5+2.5)+(1.8+2.5+2.5)	13.6	(1.7+2.3+2.3)+(1.7+2.3+2.3) (1.5-13.2)	12.60	4190 (200-4400)	18.4	3.01	B	(1.8+2.7+2.7)+(1.8+2.7+2.7) (1.5-14.4)	14.40	3800 (200-4220)	16.7	3.79	A
	(1.8+2.5+2.5)+(1.8+2.5+3.5)	14.6	(1.7+2.3+2.3)+(1.5+2+2.8) (1.5-13.2)	12.60	4190 (200-4400)	18.4	3.01	B	(1.8+2.7+2.7)+(1.6+2.5+3.1) (1.5-14.4)	14.40	3800 (200-4220)	16.7	3.79	A
	(1.8+1.8+5)+(2.5+2.5+2.5)	16.1	(1.3+1.3+3.7)+(2.1+2.1+2.1) (1.5-13.2)	12.60	4190 (200-4400)	18.4	3.01	B	(1.6+1.6+4)+(2.4+2.4+2.4) (1.5-14.4)	14.40	3800 (200-4220)	16.7	3.79	A
	(1.8+2.5+3.5)+(1.8+2.5+3.5)	15.6	(1.5+2+2.8)+(1.5+2+2.8) (1.5-13.2)	12.60	4190 (200-4400)	18.4	3.01	B	(1.6+2.5+3.1)+(1.6+2.5+3.1) (1.5-14.4)	14.40	3800 (200-4220)	16.7	3.79	A

POSSIBLE COMBINATIONS TO OPERATE		COOLING							HEATING					
		TOTAL (kW)	CAPACITY RATING (kW) (RANGE)	OUTDOOR UNIT TOTAL	OUTDOOR UNIT TOTAL INPUT (W)	OUTDOOR UNIT AMPERE (A) at 230V	EER	Class	CAPACITY RATING (kW) (RANGE)	OUTDOOR UNIT TOTAL	OUTDOOR UNIT TOTAL INPUT (W)	OUTDOOR UNIT AMPERE (A) at 230V	COP	Class
SIX UNITS	(1.8+1.8+5)+(2.5+2.5+3.5)	17.1	(1.3+1.3+3.7)+(1.85+1.85+2.6) (1.5-13.2)	12.60	4190 (200-4400)	18.4	3.01	B	(1.6+1.6+4)+(2.23+2.23+2.74) (1.5-14.4)	14.40	3800 (200-4220)	16.7	3.79	A
	(1.8+2.5+3.5)+(1.8+3.5+3.5)	16.6	(1.5+2+2.8)+(1.3+2.5+2.5) (1.5-13.2)	12.60	4190 (200-4400)	18.4	3.01	B	(1.6+2.5+3.1)+(1.4+2.9+2.9) (1.5-14.4)	14.40	3800 (200-4220)	16.7	3.79	A
	(1.8+3.5+3.5)+(1.8+3.5+3.5)	17.6	(1.3+2.5+2.5)+(1.3+2.5+2.5) (1.5-13.2)	12.60	4190 (200-4400)	18.4	3.01	B	(1.4+2.9+2.9)+(1.4+2.9+2.9) (1.5-14.4)	14.40	3800 (200-4220)	16.7	3.79	A
	(1.8+2.5+2.5)+(2.5+2.5+2.5)	14.3	(1.7+2.3+2.3)+(2.1+2.1+2.1) (1.5-13.2)	12.60	4190 (200-4400)	18.4	3.01	B	(1.8+2.7+2.7)+(2.4+2.4+2.4) (1.5-14.4)	14.40	3800 (200-4220)	16.7	3.79	A
	(1.8+2.5+3.5)+(2.5+2.5+2.5)	15.3	(1.5+2+2.8)+(2.1+2.1+2.1) (1.5-13.2)	12.60	4190 (200-4400)	18.4	3.01	B	(1.6+2.5+3.1)+(2.4+2.4+2.4) (1.5-14.4)	14.40	3800 (200-4220)	16.7	3.79	A
	(1.8+2.5+3.5)+(2.5+2.5+3.5)	16.3	(1.5+2+2.8)+(1.85+1.85+2.6) (1.5-13.2)	12.60	4190 (200-4400)	18.4	3.01	B	(1.6+2.5+3.1)+(2.23+2.23+2.74) (1.5-14.4)	14.40	3800 (200-4220)	16.7	3.79	A
	(1.8+3.5+3.5)+(2.5+2.5+3.5)	17.3	(1.3+2.5+2.5)+(1.85+1.85+2.6) (1.5-13.2)	12.60	4190 (200-4400)	18.4	3.01	B	(1.4+2.9+2.9)+(2.23+2.23+2.74) (1.5-14.4)	14.40	3800 (200-4220)	16.7	3.79	A
	(2.5+2.5+2.5)+(2.5+2.5+2.5)	15.0	(2.1+2.1+2.1)+(2.1+2.1+2.1) (1.5-13.2)	12.60	4190 (200-4400)	18.4	3.01	B	(2.4+2.4+2.4)+(2.4+2.4+2.4) (1.5-14.4)	14.40	3800 (200-4220)	16.7	3.79	A
	(2.5+2.5+2.5)+(2.5+2.5+3.5)	16.0	(2.1+2.1+2.1)+(1.85+1.85+2.6) (1.5-13.2)	12.60	4190 (200-4400)	18.4	3.01	B	(2.4+2.4+2.4)+(2.23+2.23+2.74) (1.5-14.4)	14.40	3800 (200-4220)	16.7	3.79	A
	(2.5+2.5+3.5)+(2.5+2.5+3.5)	17.0	(1.85+1.85+2.6)+(1.85+1.85+2.6) (1.5-13.2)	12.60	4190 (200-4400)	18.4	3.01	B	(2.23+2.23+2.74)+(2.23+2.23+2.74) (1.5-14.4)	14.40	3800 (200-4220)	16.7	3.79	A

OUTDOOR CONNECTION TERMINAL	4 UNIT CONNECTION	5 UNIT CONNECTION	6 UNIT CONNECTION
INDOOR 1			1.8kW, 2.5kW
INDOOR 2	1.8kW, 2.5kW, 3.5kW	1.8kW, 2.5kW, 3.5kW	1.8kW, 2.5kW, 3.5kW*
INDOOR 3	1.8kW, 2.5kW, 3.5kW, 5.0kW	1.8kW, 2.5kW, 3.5kW, 5.0kW	1.8kW, 2.5kW, 3.5kW, 5.0kW**
INDOOR 4		1.8kW, 2.5kW	1.8kW, 2.5kW
INDOOR 5	1.8kW, 2.5kW, 3.5kW	1.8kW, 2.5kW, 3.5kW*	1.8kW, 2.5kW, 3.5kW*
INDOOR 6	1.8kW, 2.5kW, 3.5kW, 5.0kW	1.8kW, 2.5kW, 3.5kW, 5.0kW**	1.8kW, 2.5kW, 3.5kW, 5.0kW**

3.5kW*: available only when 1.8kW indoor connected to INDOOR 1 and INDOOR 4.
5.0kW**: available only when 1.8kW indoor connected to INDOOR1+INDOOR 2 and INDOOR 4+INDOOR 5.

Indoor unit model	Nominal cooling capacity (kW)	Capacity (kW) at single unit operation		Suitable room size (m^2) At single unit operation	
		Cooling	Heating	Cooling	Heating
RAK-18QXA	1.8	1.00-2.50	1.10-3.20	8-12	10-13
RAK-25QXA	2.5	0.90-3.10	0.90-4.40	11-17	14-18
RAK-35QXA	3.5	0.90-4.00	0.90-5.00	16-24	17-22
RAK-50QXA	5.0	0.90-5.20	0.90-7.50	23-34	23-29
RAK-18QPA	1.8	1.00-2.50	1.10-3.20	8-12	10-13
RAK-25QPA	2.5	1.00-3.10	1.10-4.40	11-17	14-18
RAK-35QPA	3.5	1.00-4.00	1.10-5.00	16-24	17-22
RAK-50QPA	5.0	1.00-5.60	1.10-7.20	23-34	23-29
RAI-25RPA	2.5	1.00-3.10	1.10-4.40	11-17	14-18
RAI-35RPA	3.5	1.00-4.00	1.10-5.00	18-28	22-27
RAI-50RPA	5.0	1.00-5.60	1.10-7.20	23-34	23-29
RAD-25RPA	2.5	1.00-3.10	1.10-4.40	11-17	14-18
RAD-35RPA	3.5	1.00-4.00	1.10-5.00	18-28	22-27
RAD-50RPA	5.0	1.00-5.60	1.10-7.20	23-34	23-29
RAF-25QXA	2.5	0.90-3.10	0.90-4.40	11-17	14-18
RAF-35QXA	3.5	0.90-4.00	0.90-5.00	16-24	17-22
RAF-50QXA	5.0	0.90-5.20	0.90-8.10	23-34	23-29
RAF-25RPA	2.5	0.90-3.10	0.90-4.40	11-17	14-18
RAF-35RPA	3.5	0.90-4.00	0.9-5.00	16-24	17-22
RAF-50RPA	5.0	1.90-5.20	2.20-7.30	23-34	23-29

*At least four indoor units should be connected
*One-unit values are for one unit operation with four indoors connected.
*Two-unit values are for two units operation with four indoors connected.
*Three-unit values are for three units operation with four indoors connected.
*Four-unit values are for four units operation with four indoors connected.
*Five-unit values are for five units operation with five indoors connected.
*Total nominal cooling capacity should not be more than 17.6kW.

4.7. SOUND DATA

4.7.1. RAC-25NPA

COOLING MODE

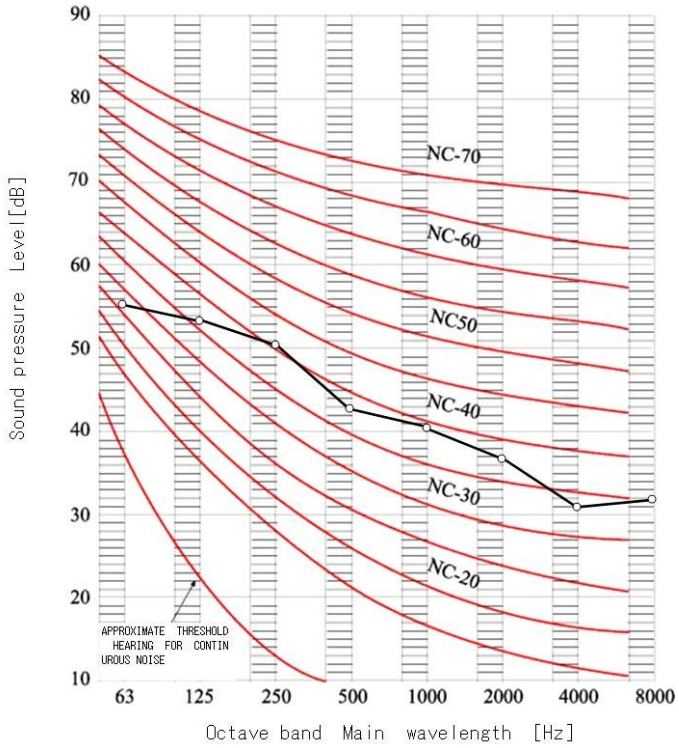

HEATING MODE

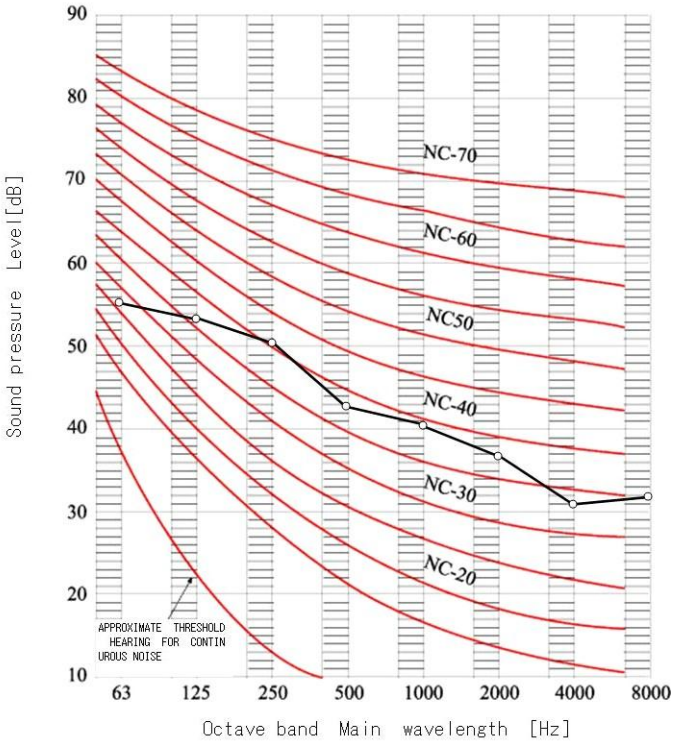

4.7.2. RAC-35NPA

COOLING MODE

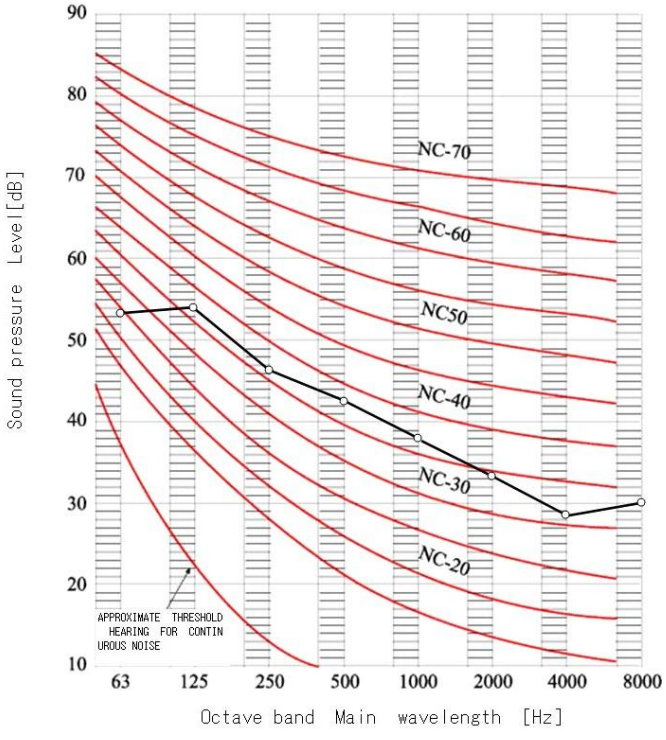

HEATING MODE

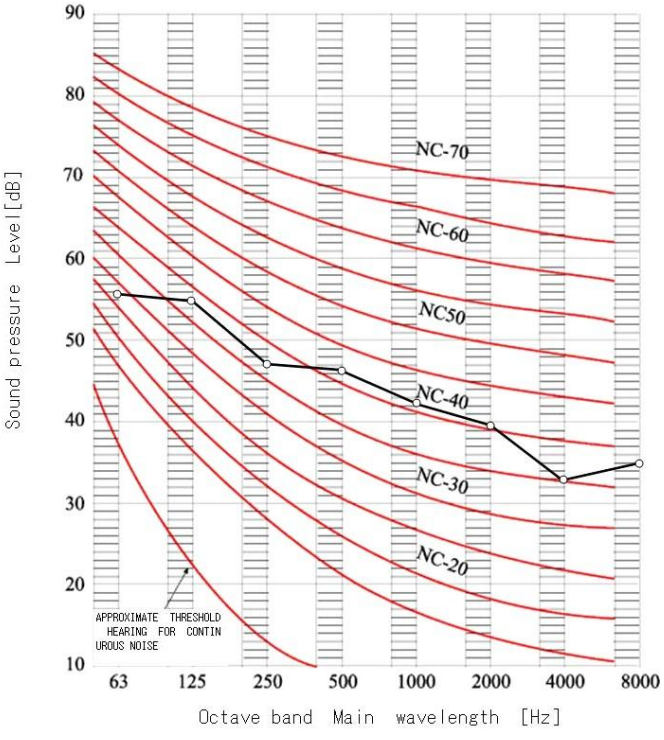

4.7.3. RAC-50NPA

COOLING MODE

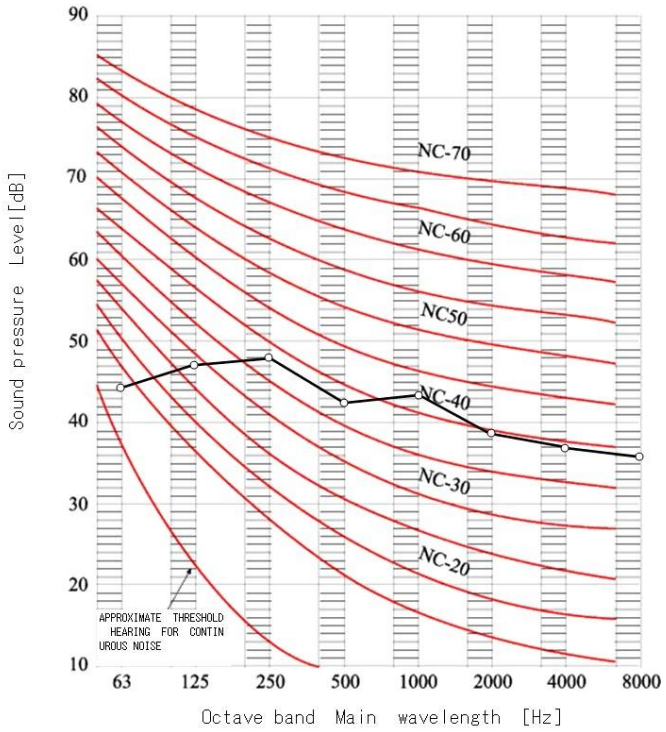

HEATING MODE

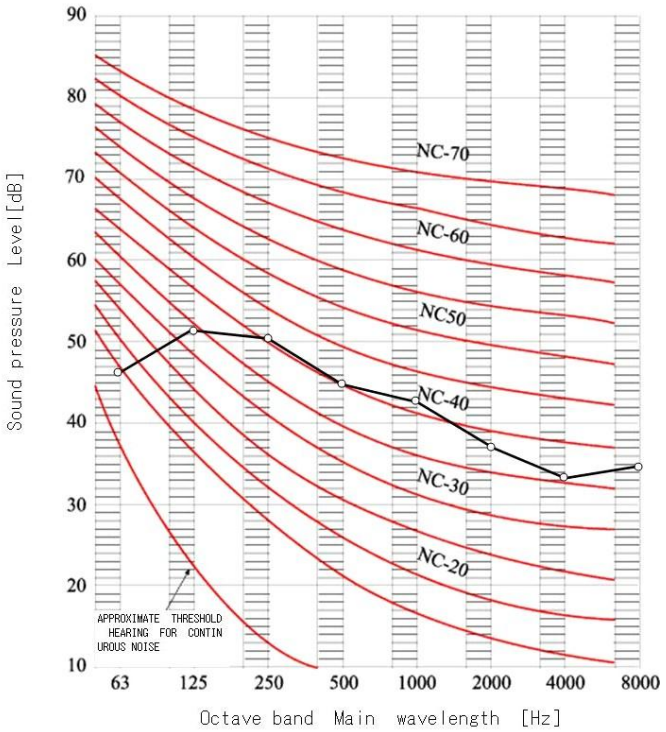

4.7.4. RAC-18WSA

COOLING

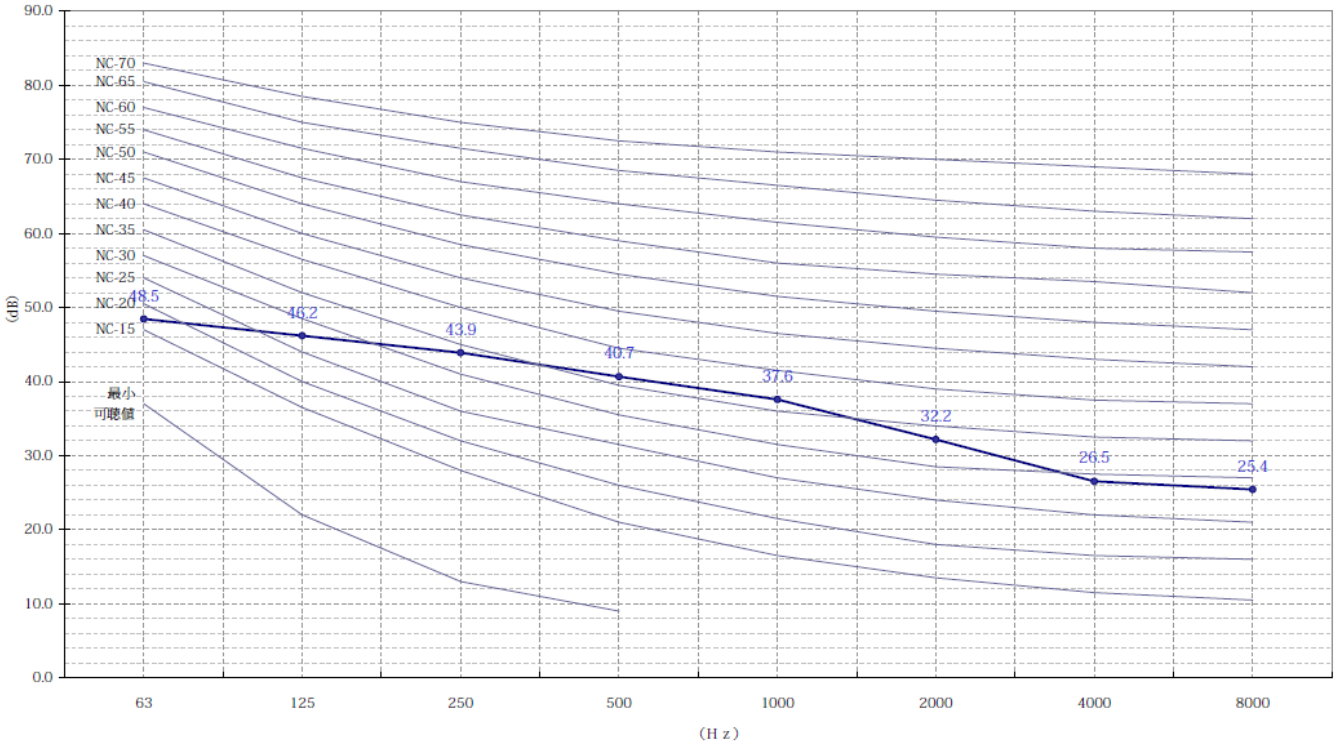

HEATING

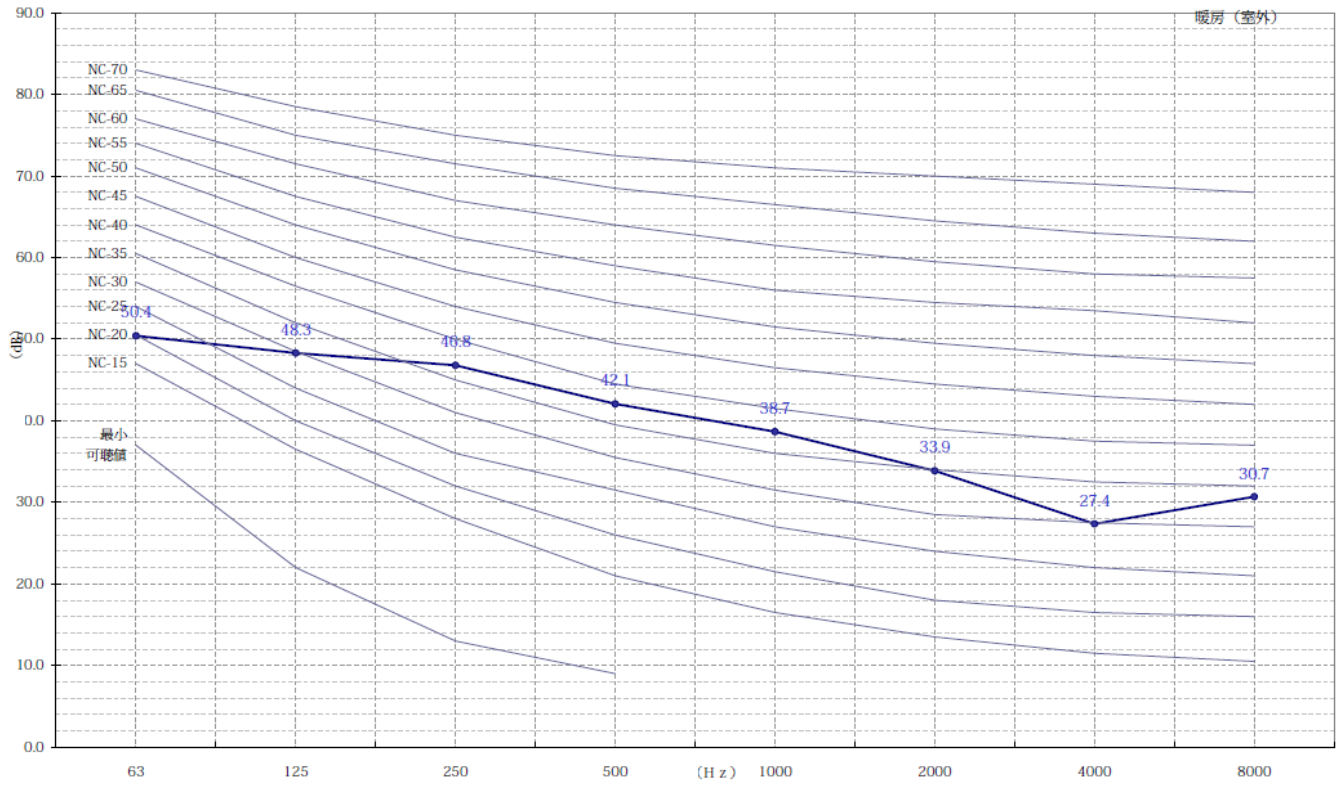

4.7.5. RAC-25WSA

COOLING

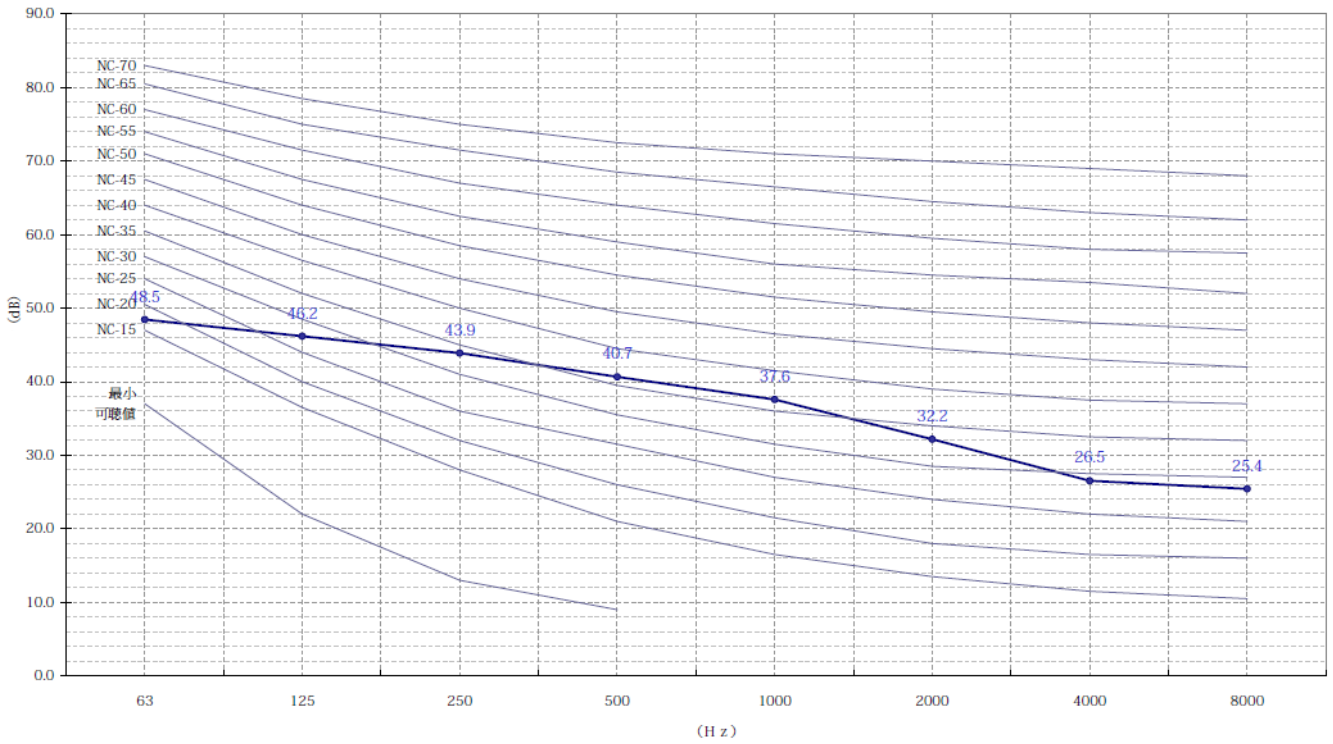

HEATING

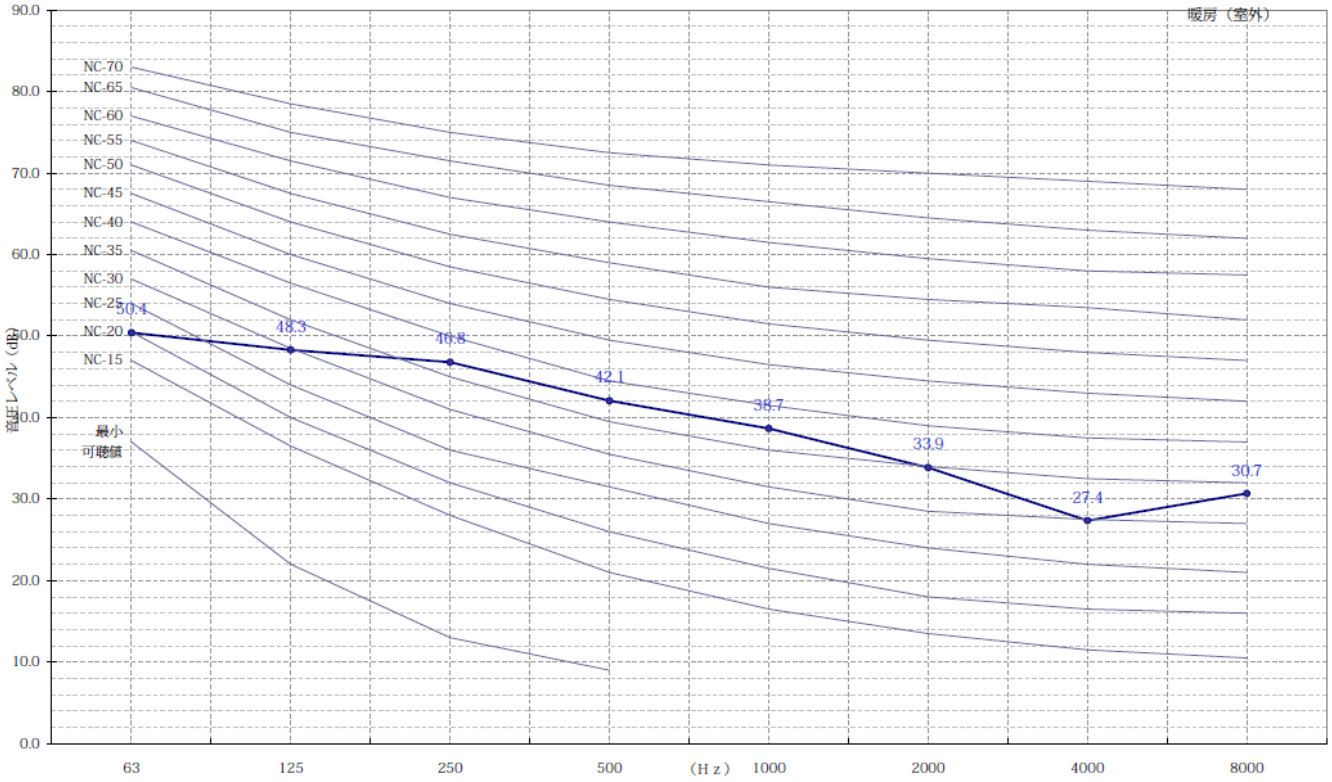

4.7.6. RAC-35WSA

COOLING

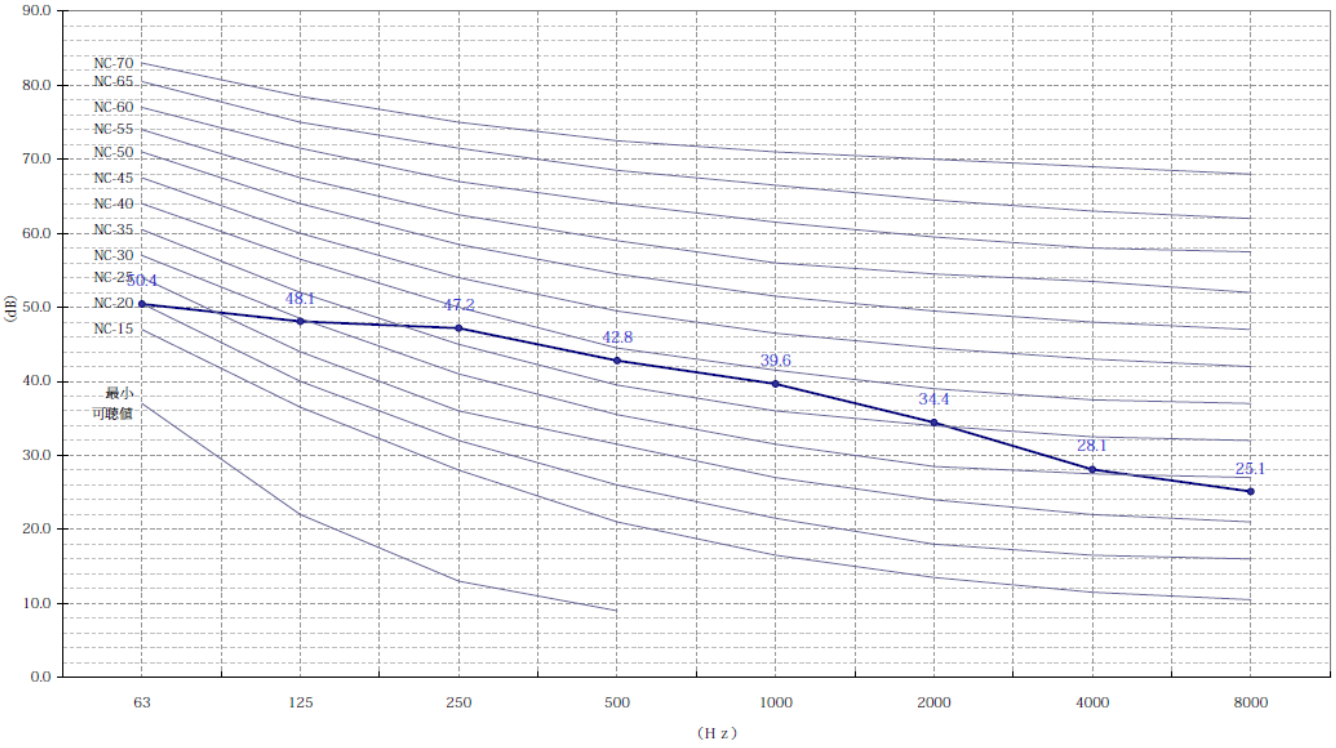

HEATING

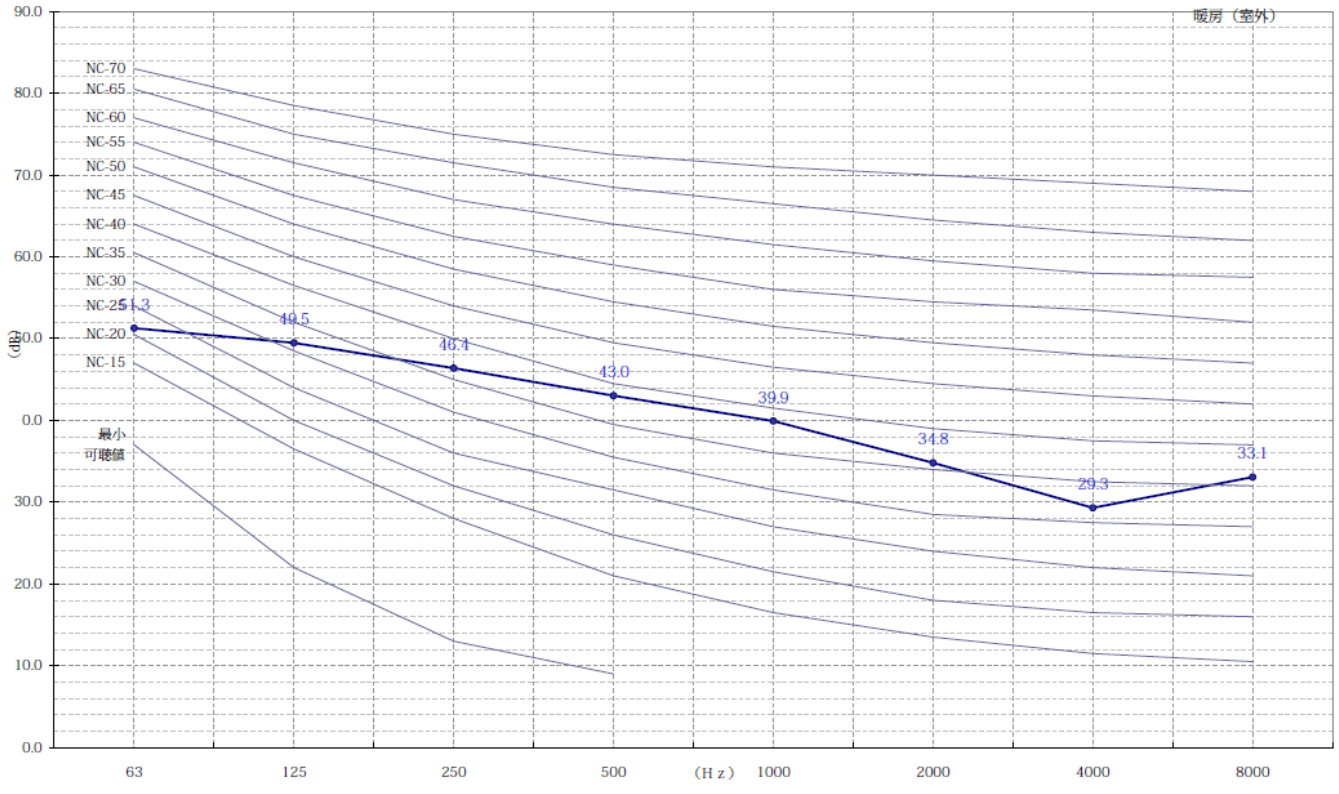

4.7.7. RAC-25WXA

COOLING MODE

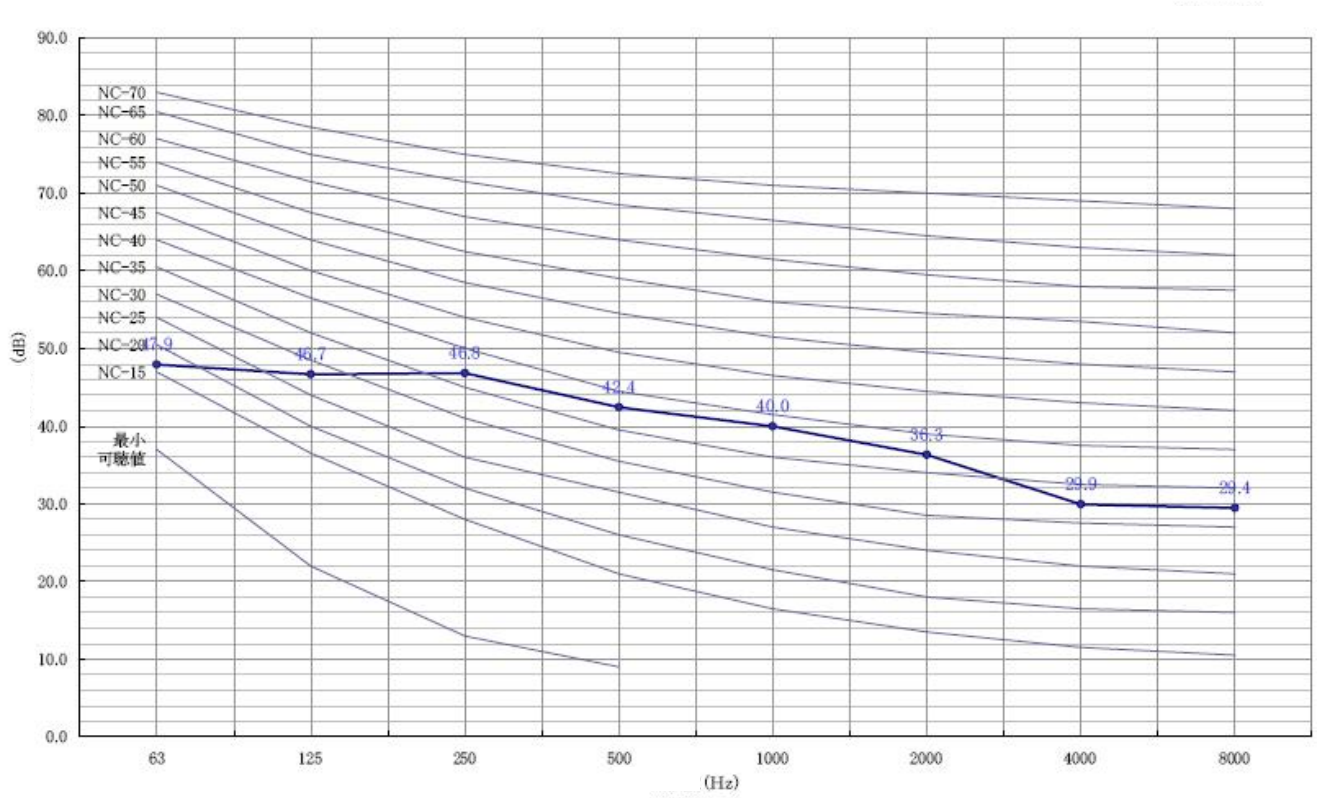

HEATING MODE

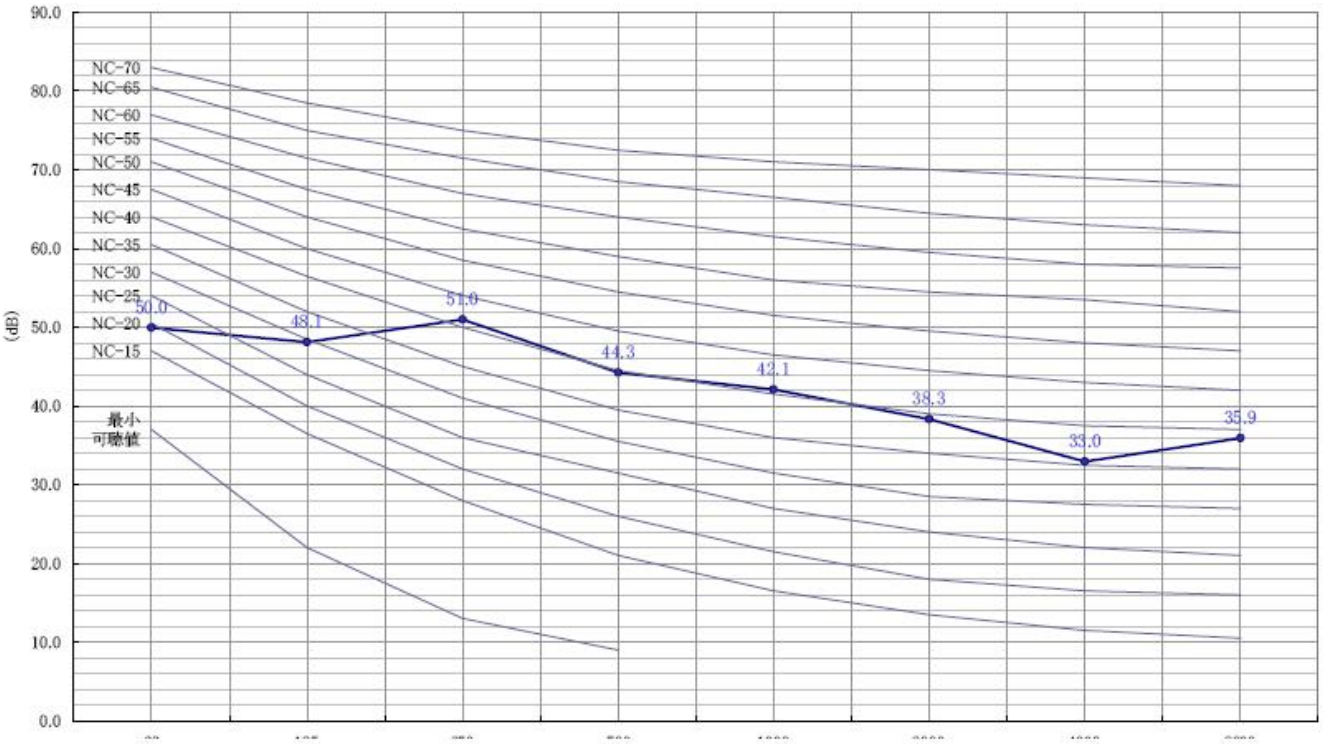

4.7.8. RAC-35WXA

COOLING MODE

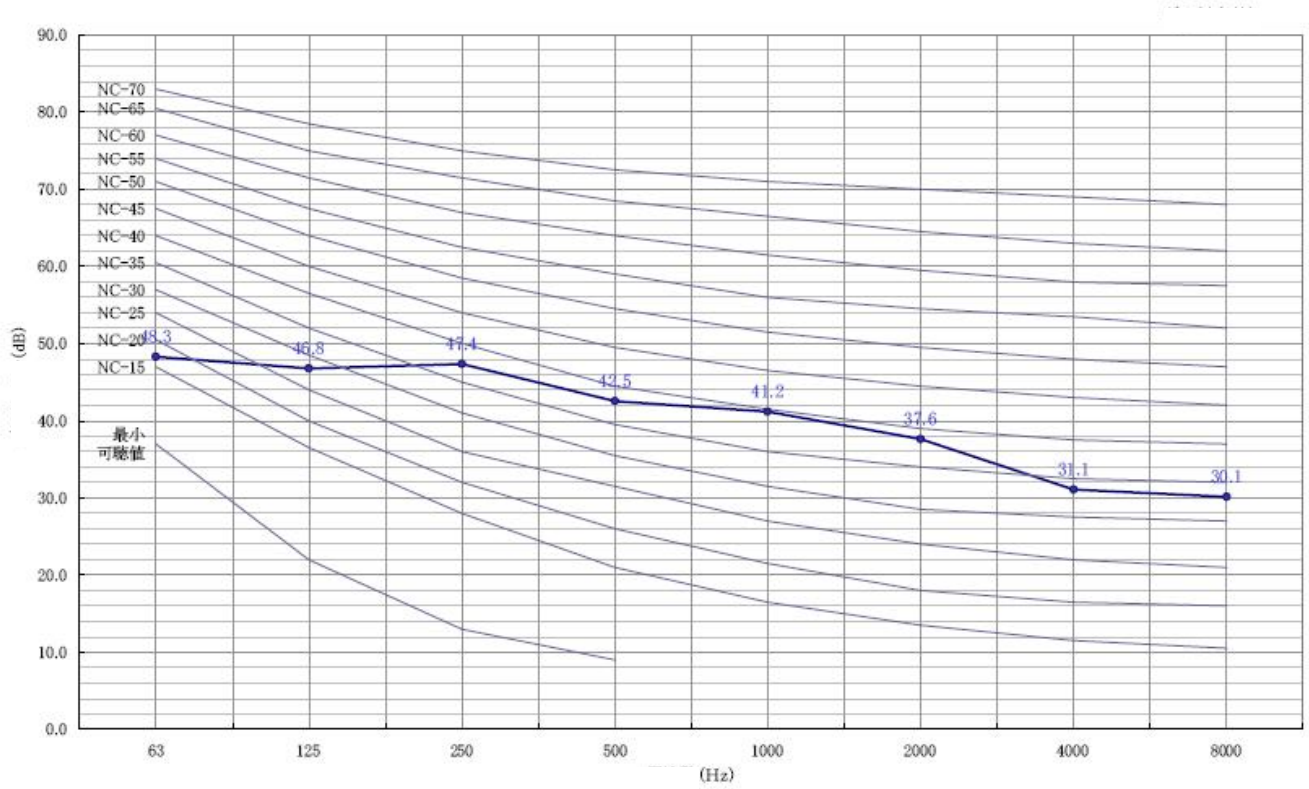

HEATING MODE

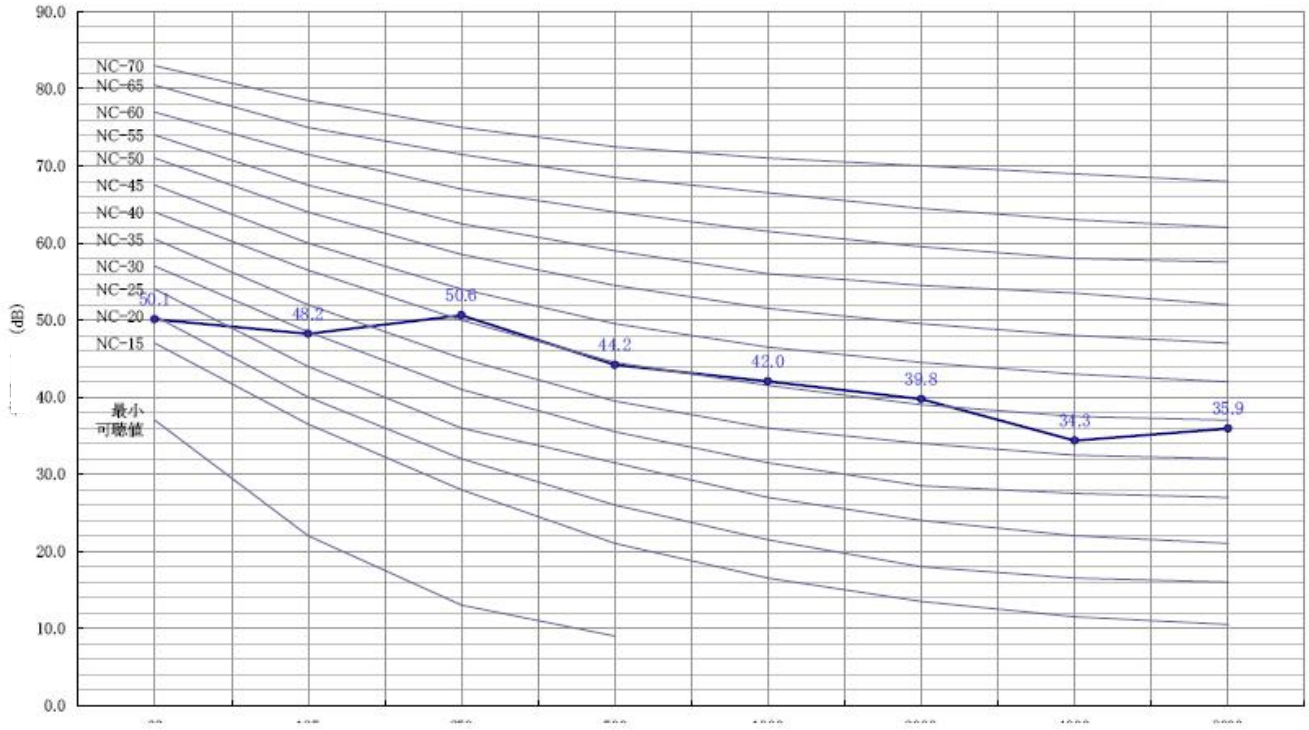

4.7.9. RAC-50WXA

COOLING MODE

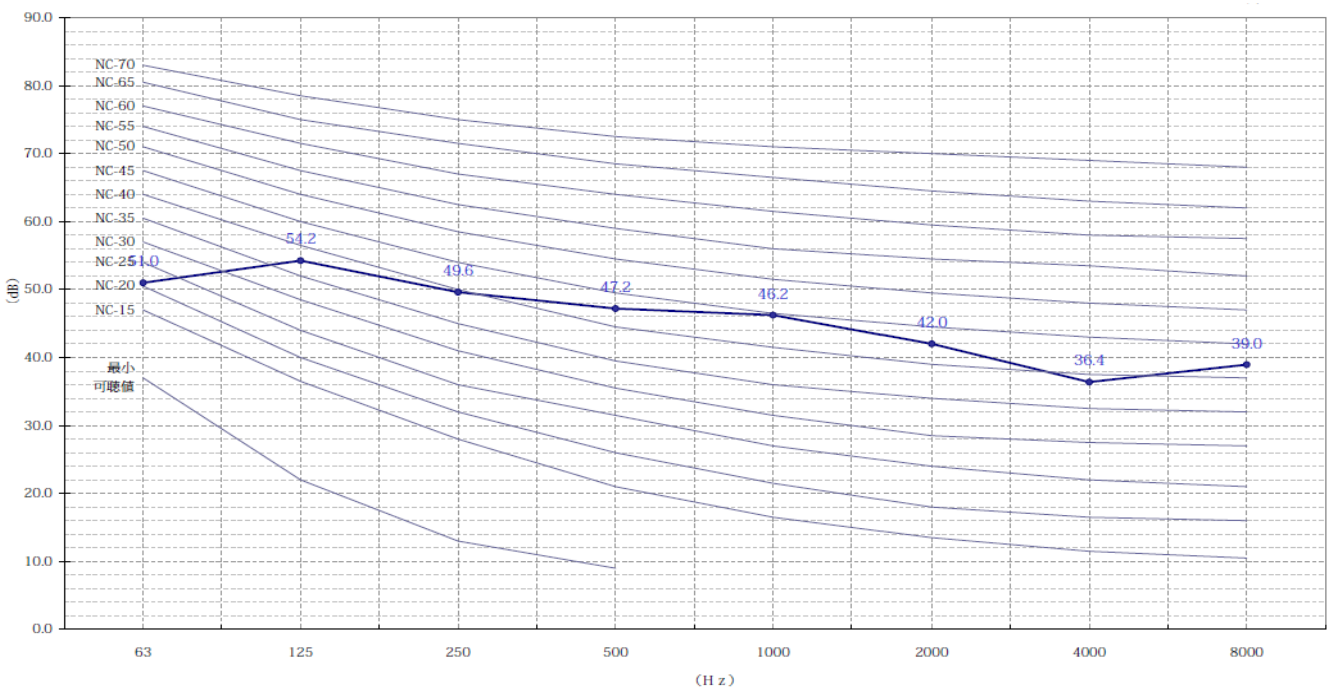

HEATING MODE

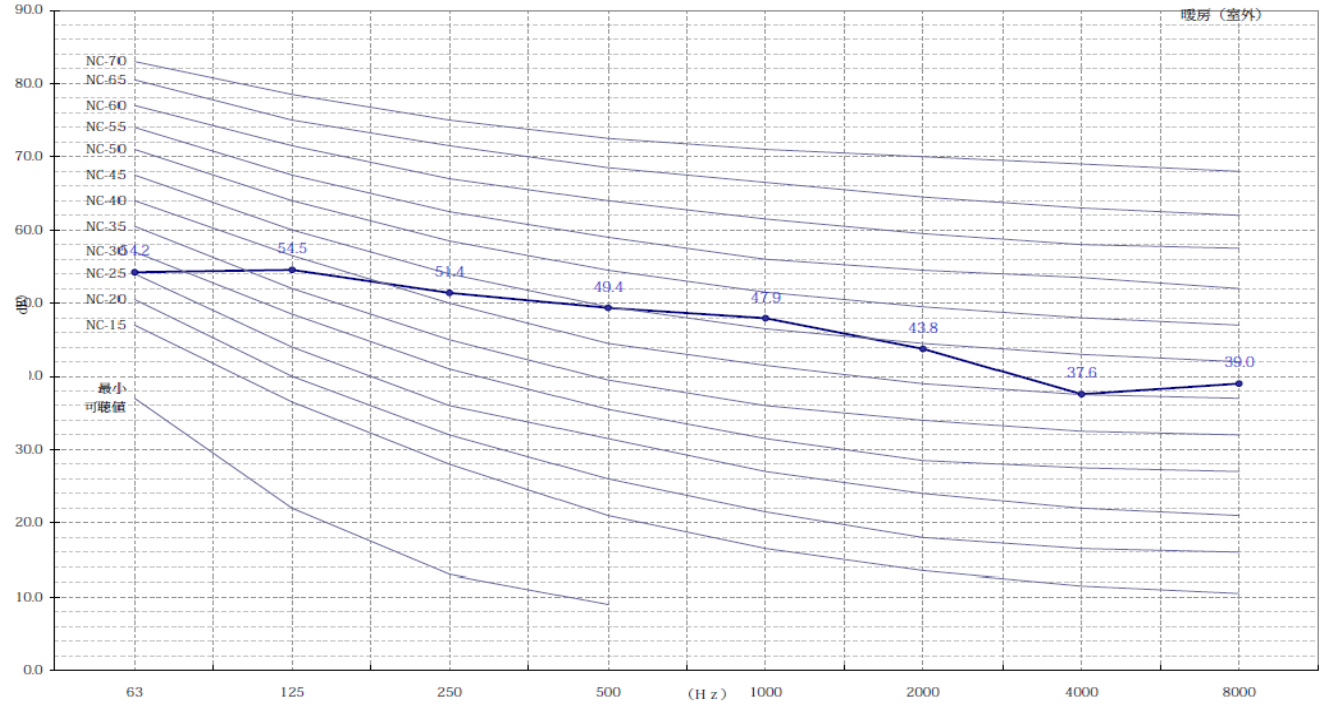

4.7.10. RAC-25FXA

COOLING MODE

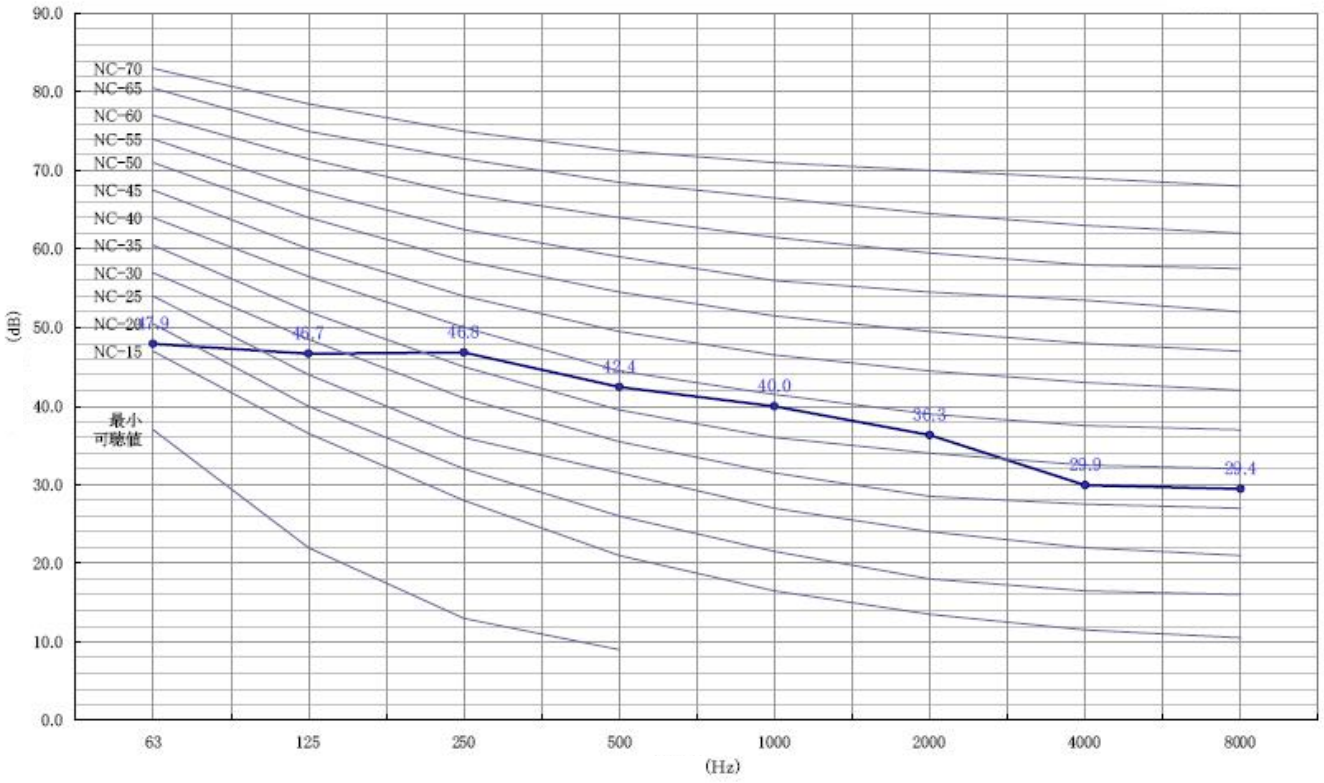

HEATING MODE

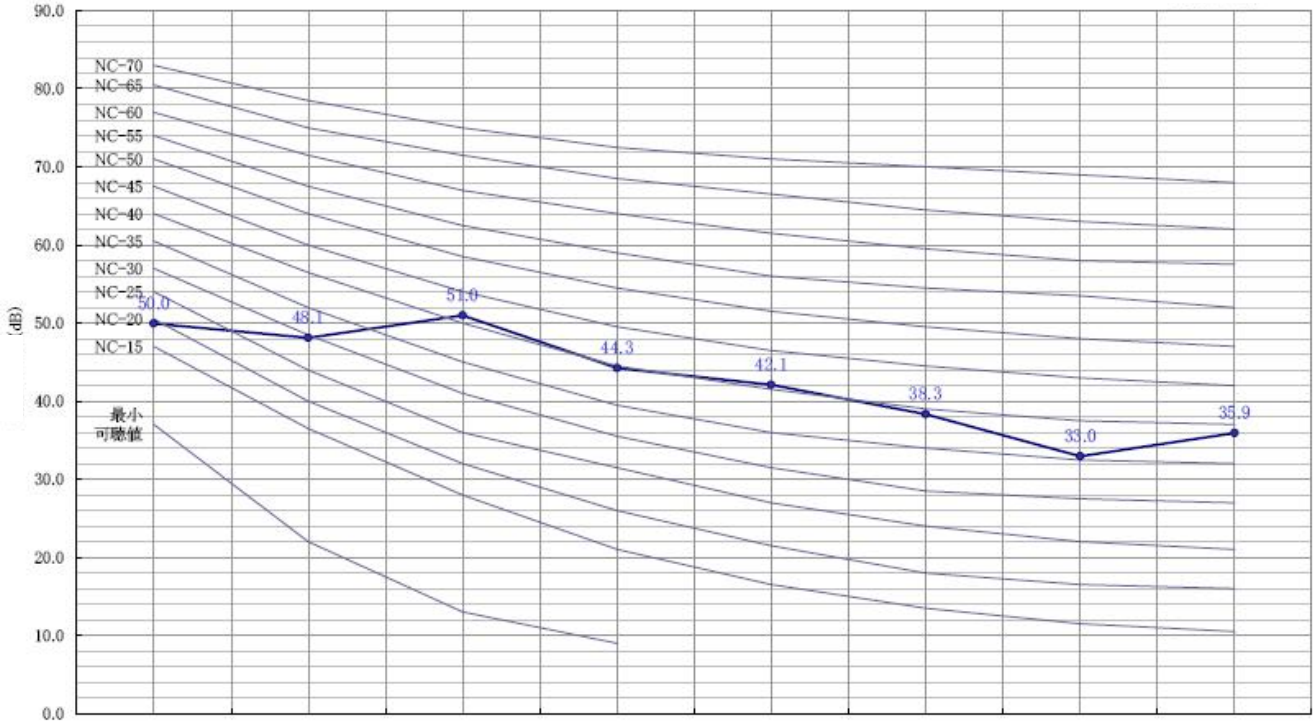

4.7.11. RAC-35FXA

COOLING MODE

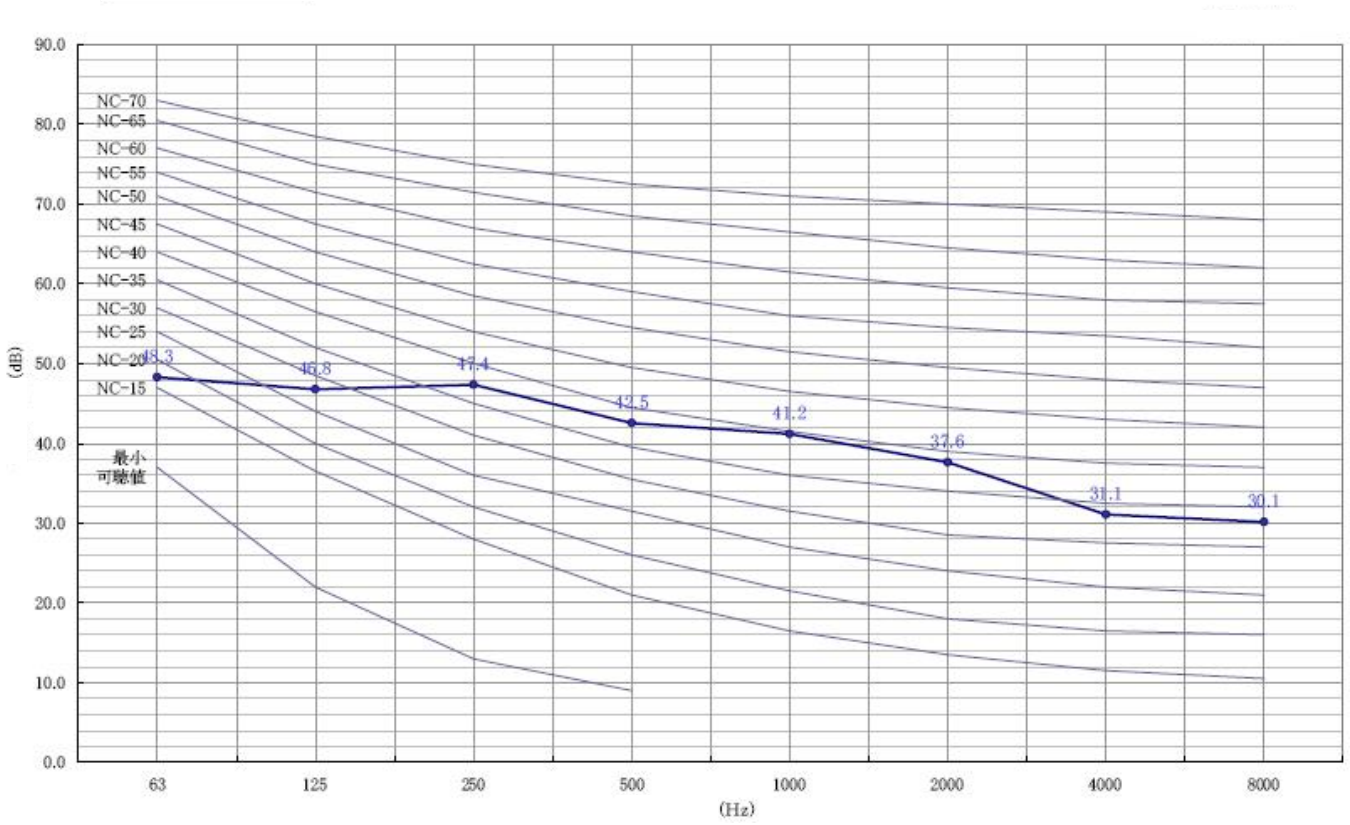

HEATING MODE

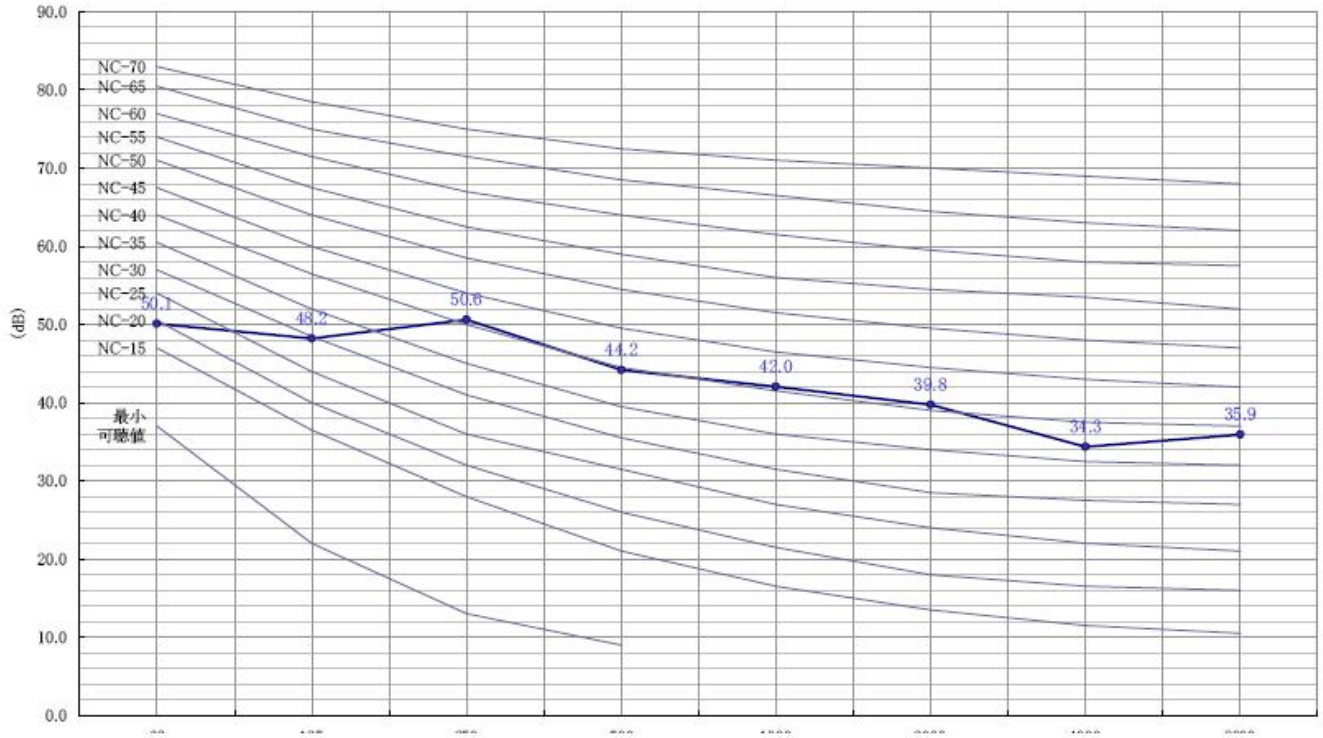

4.7.12. RAC-50FXA

COOLING MODE

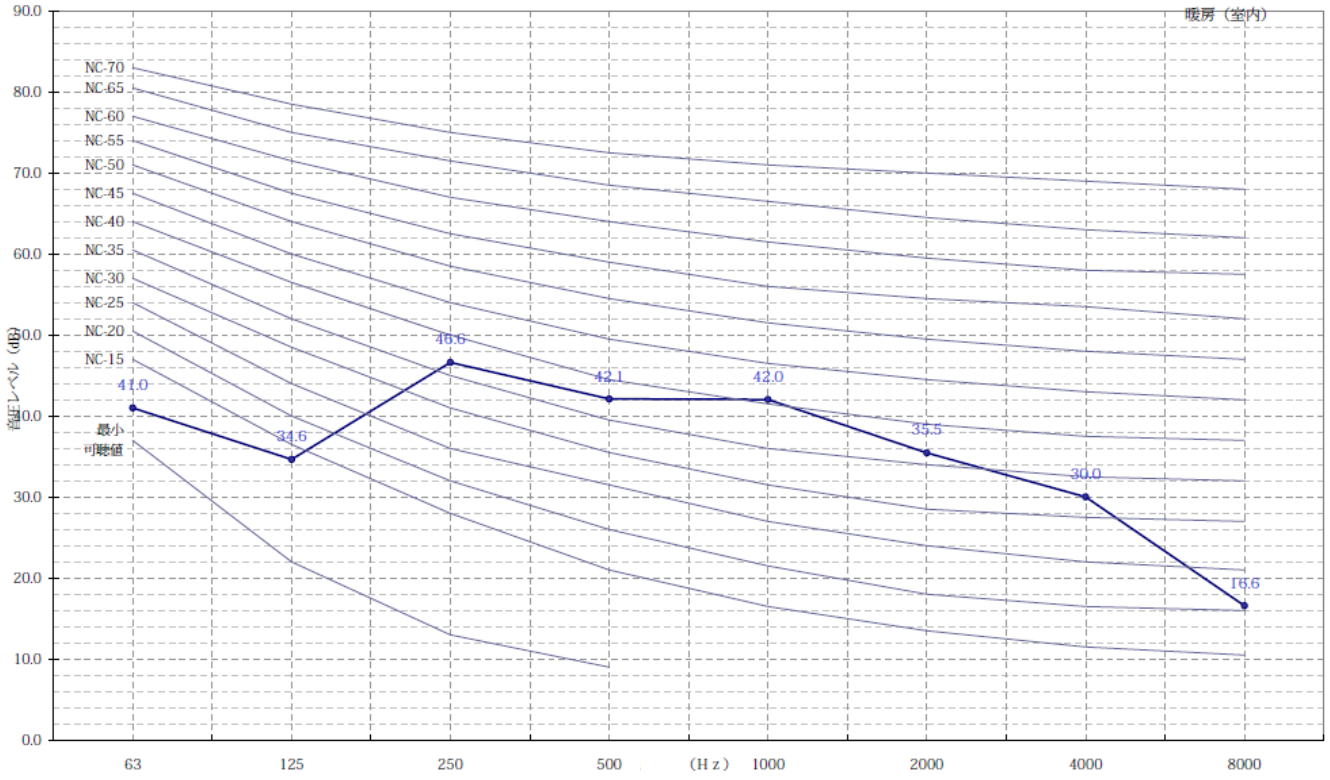

HEATING MODE

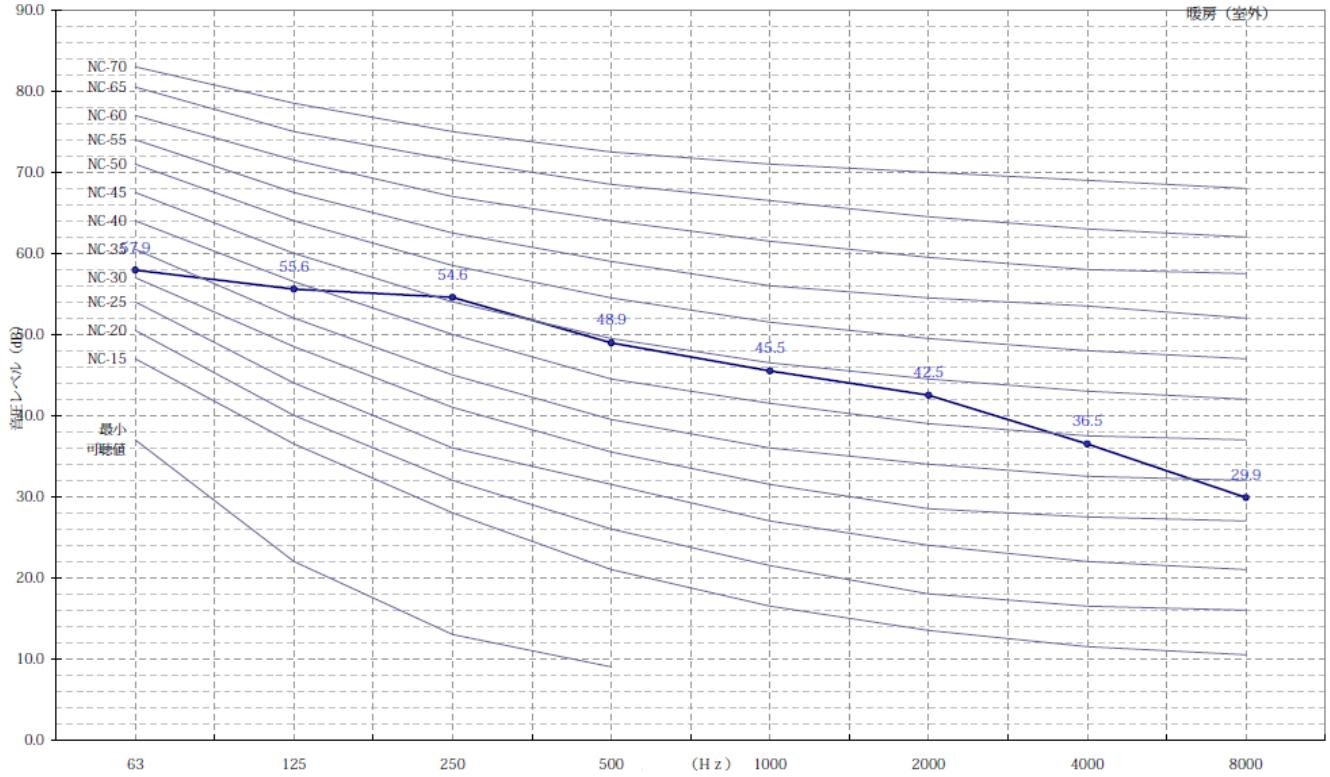

4.7.13. RAC-25FPA

COOLING MODE

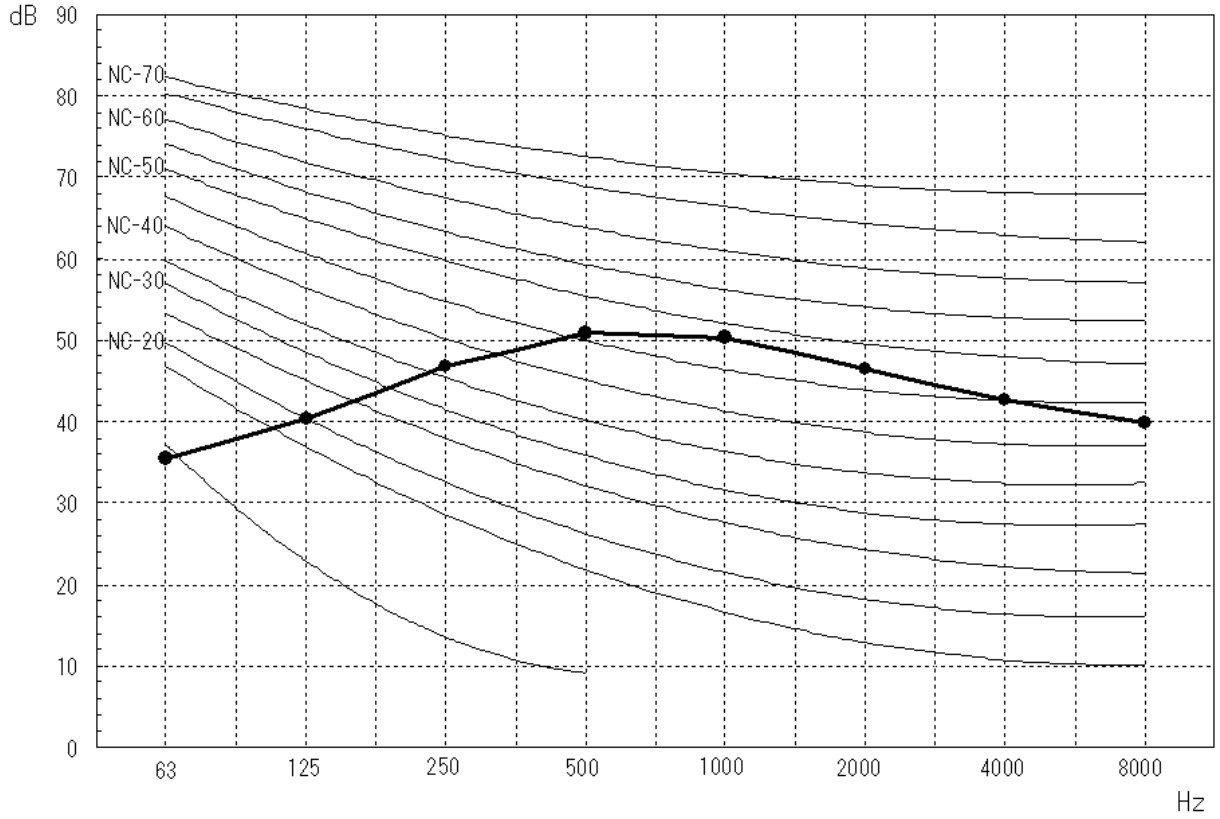

HEATING MODE

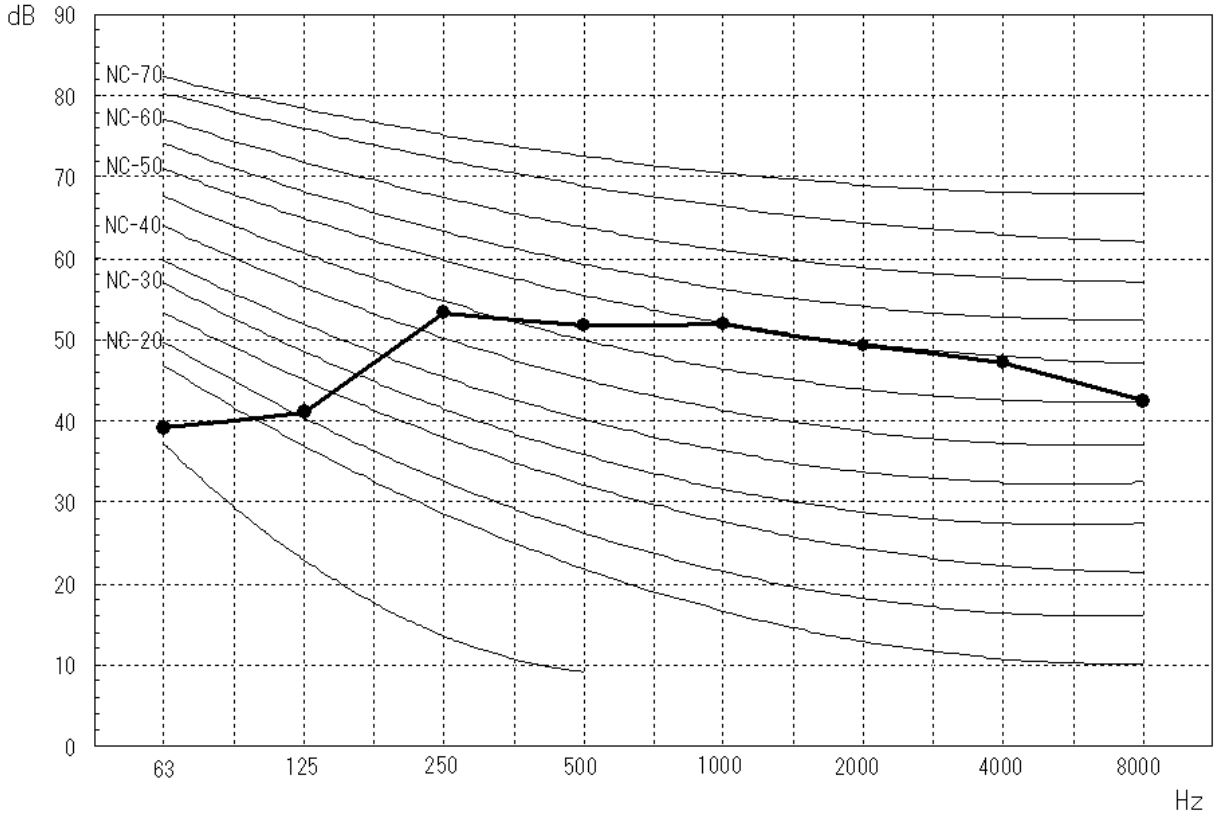

4.7.14. RAC-35FPA

COOLING MODE

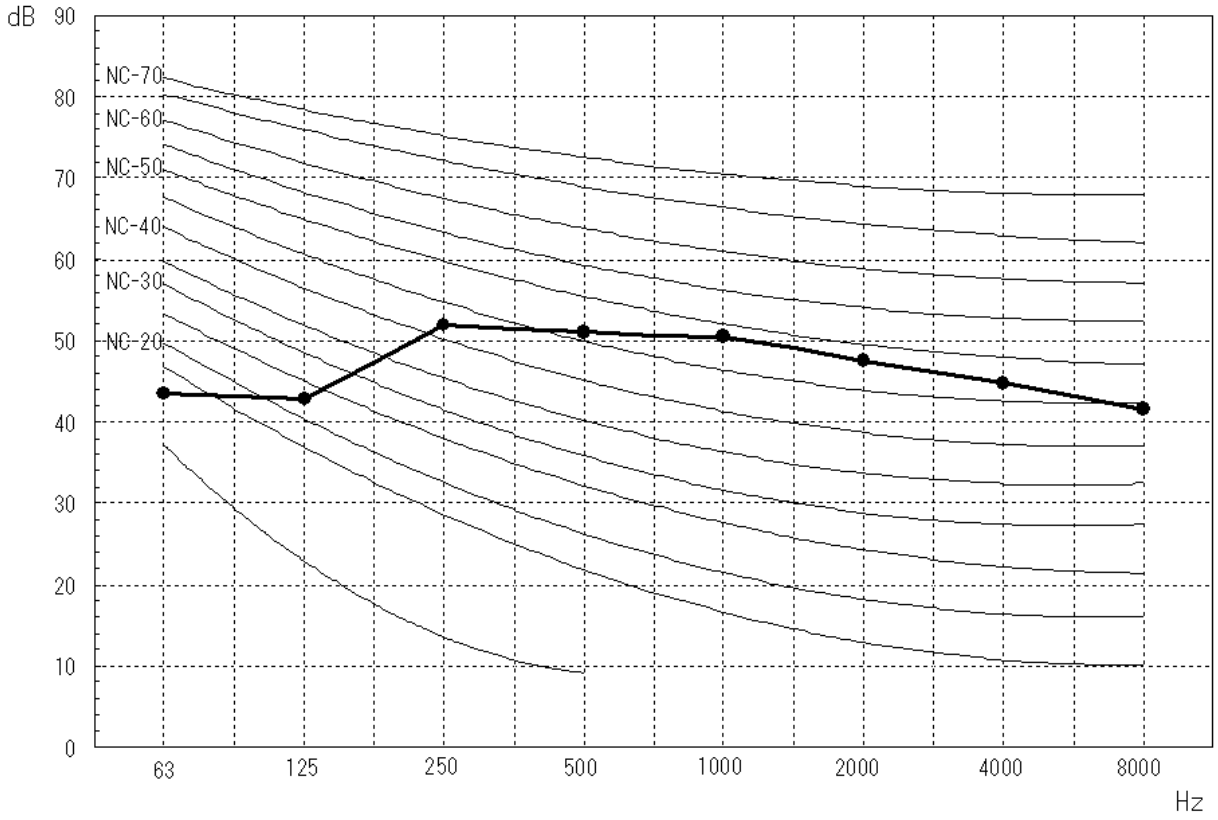

HEATING MODE

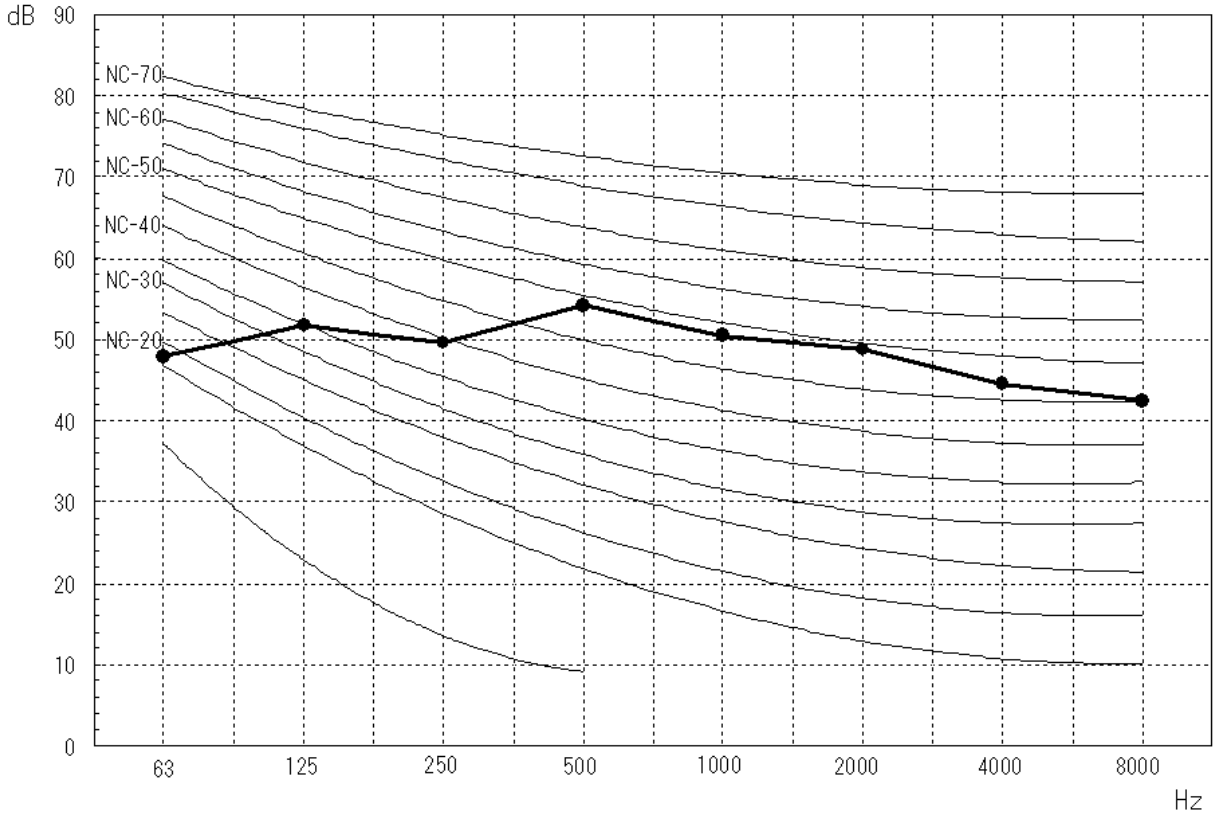

4.7.15. RAC-50FPA

COOLING MODE

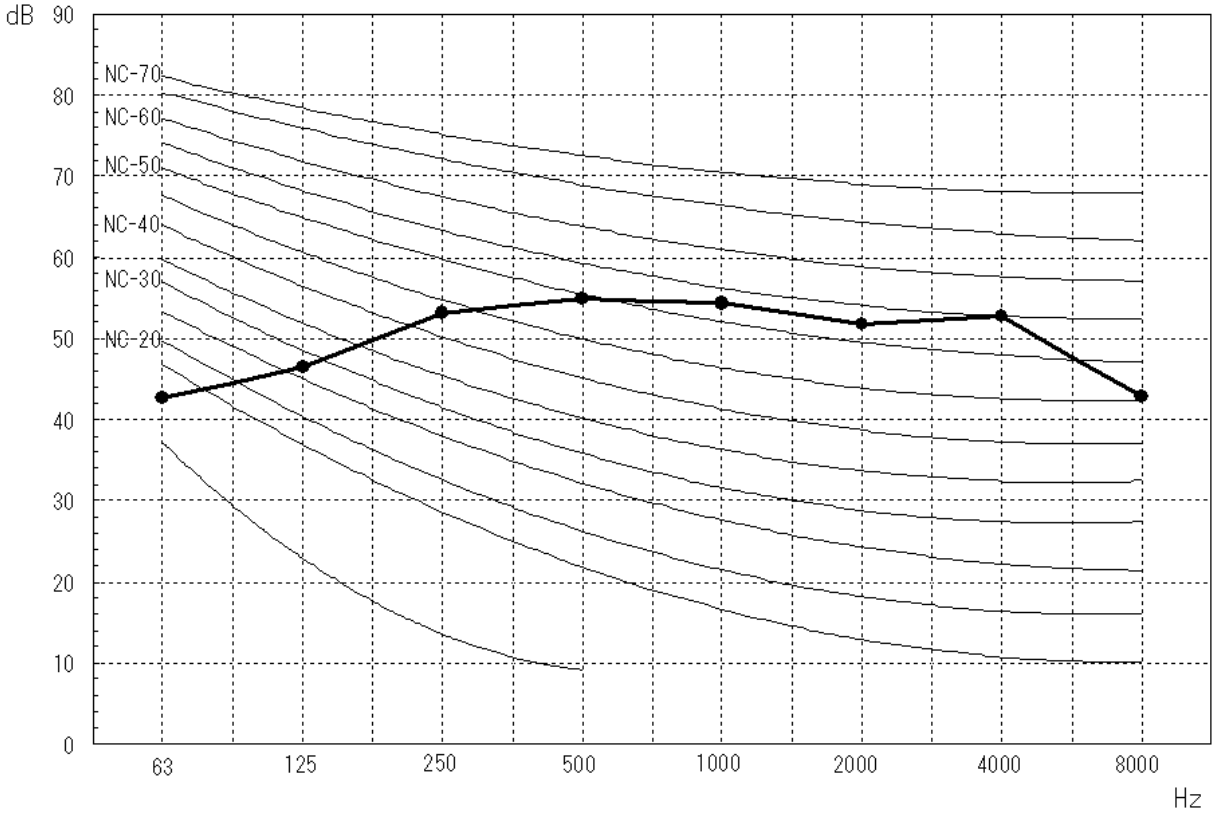

HEATING MODE

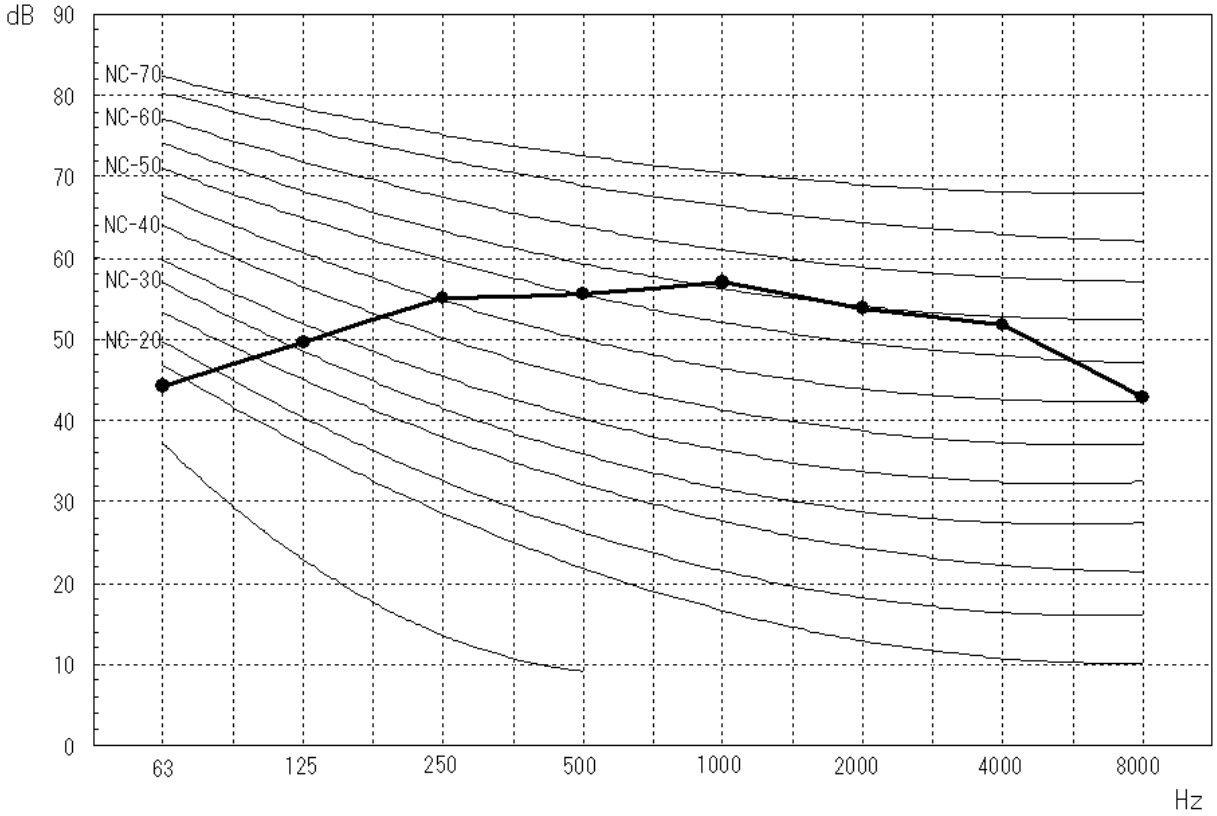

4.7.16. RAC-18WPA

COOLING

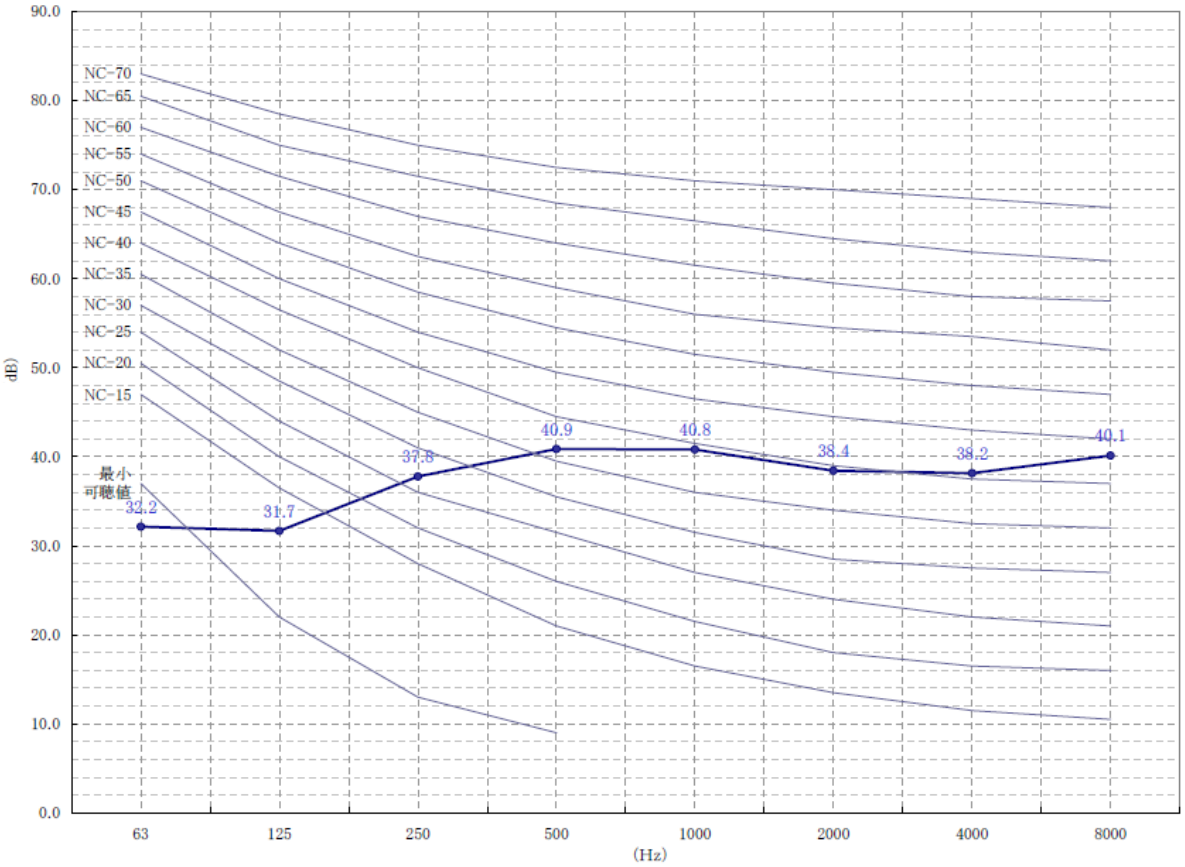

HEATING

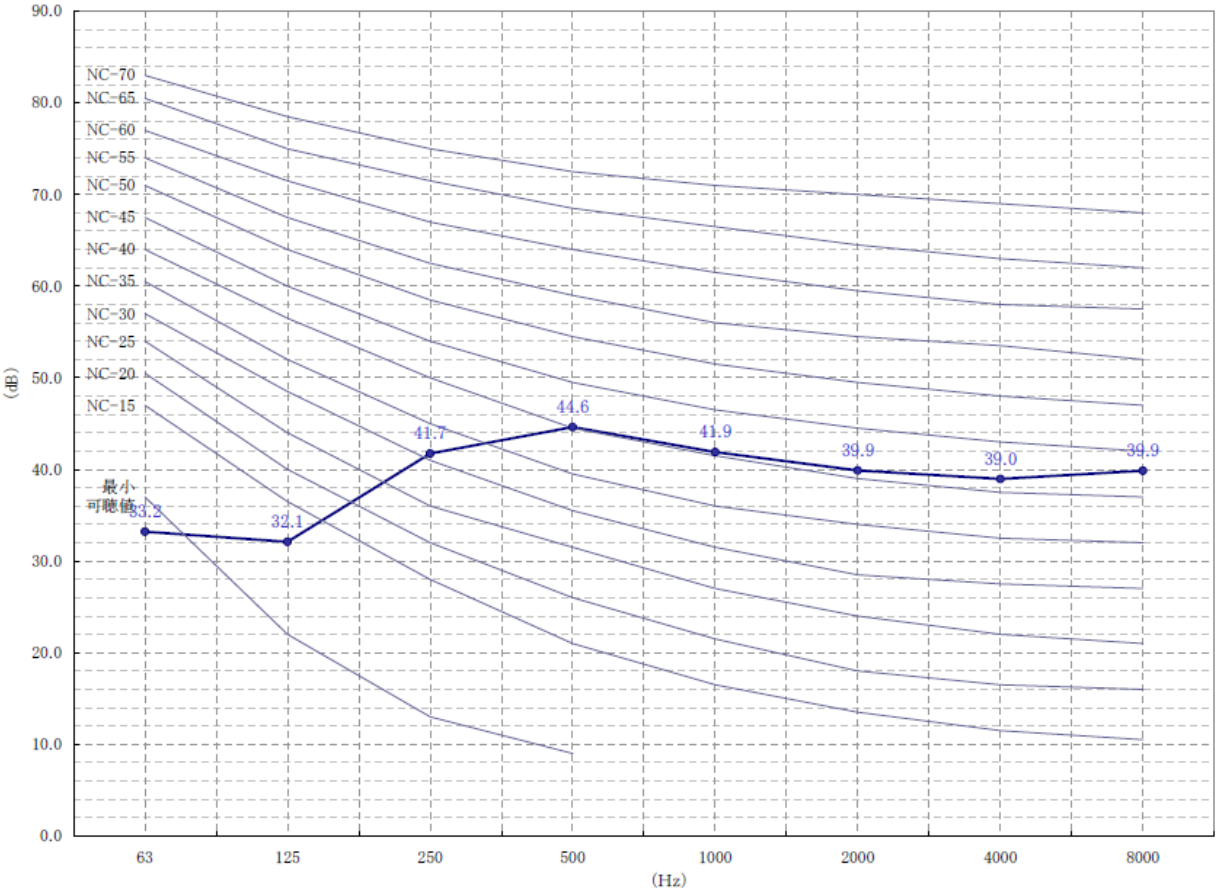

4.7.17. RAC-25WPA

COOLING

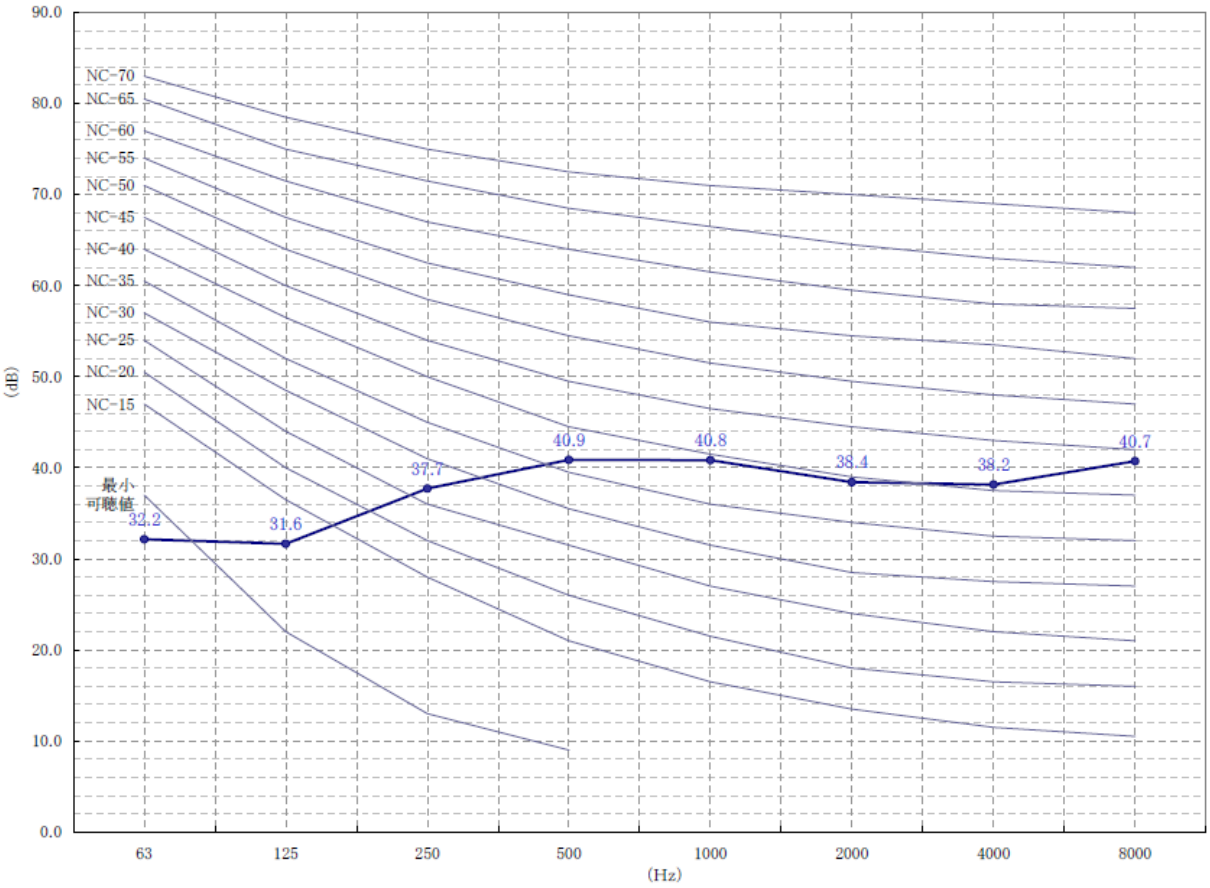

HEATING

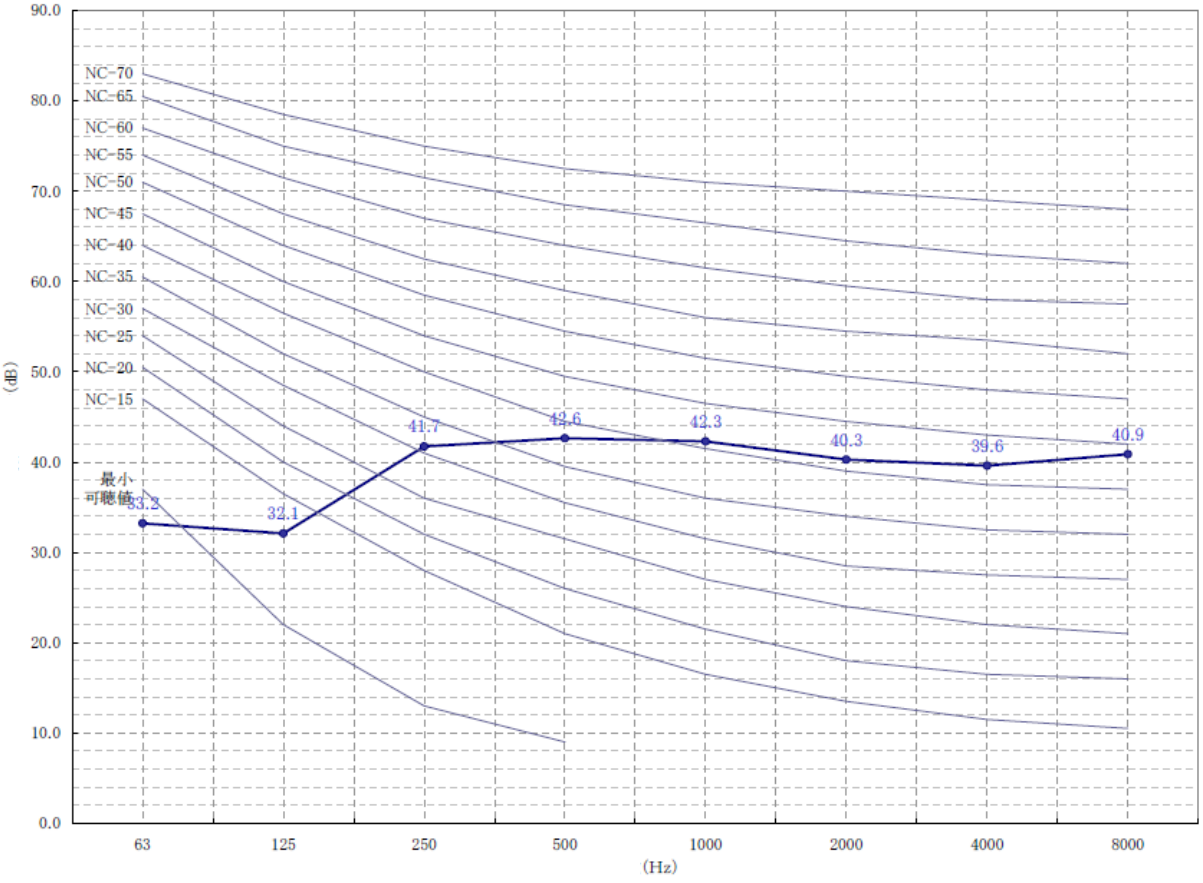

4.7.18. RAC-35WPA

COOLING

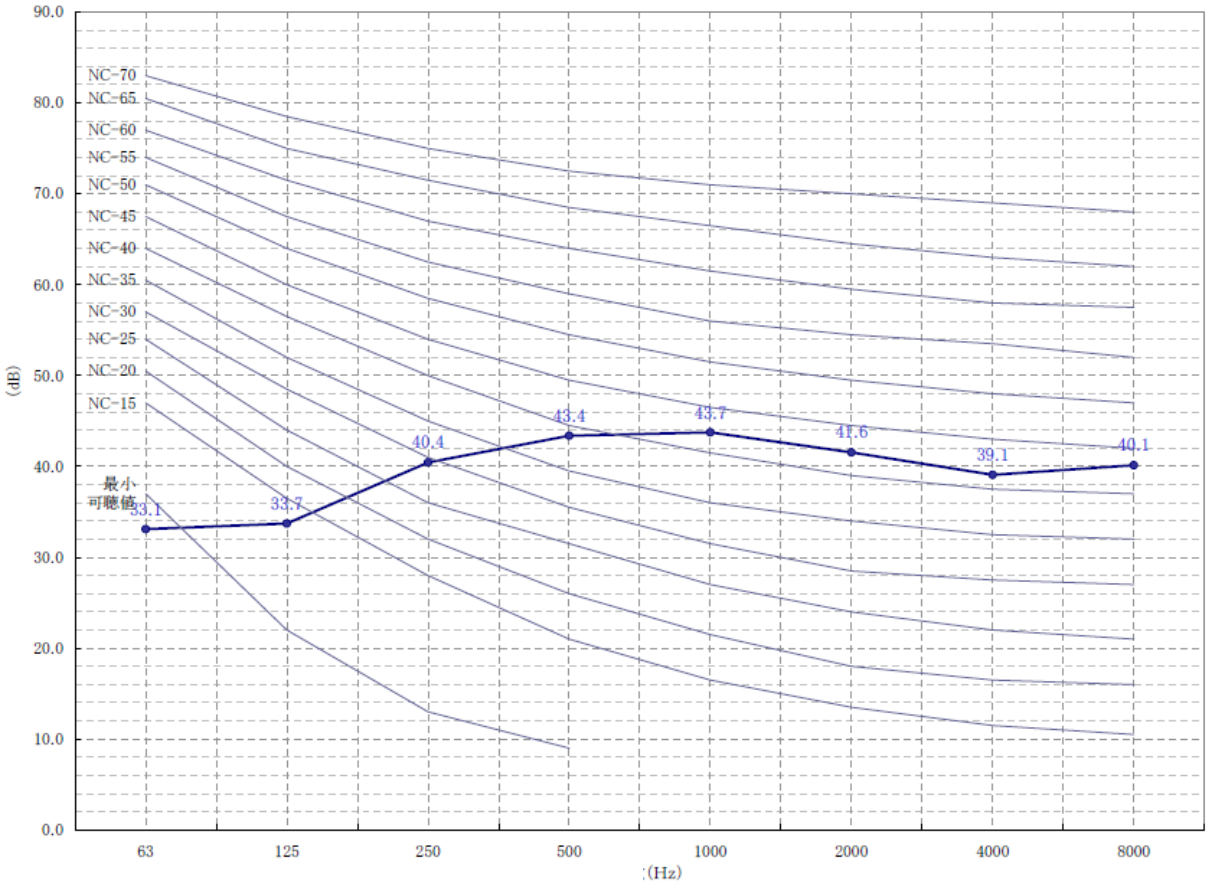

HEATING

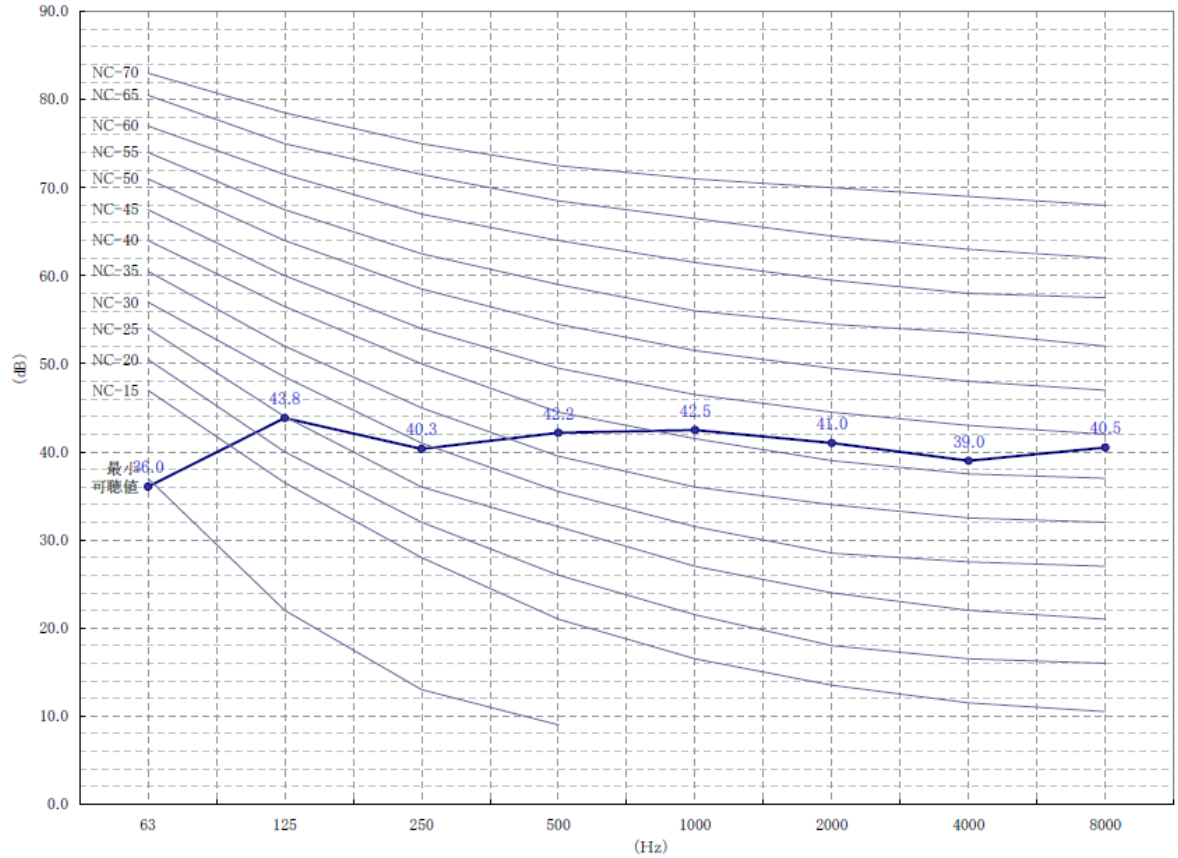

4.7.19. RAC-50WPA

COOLING

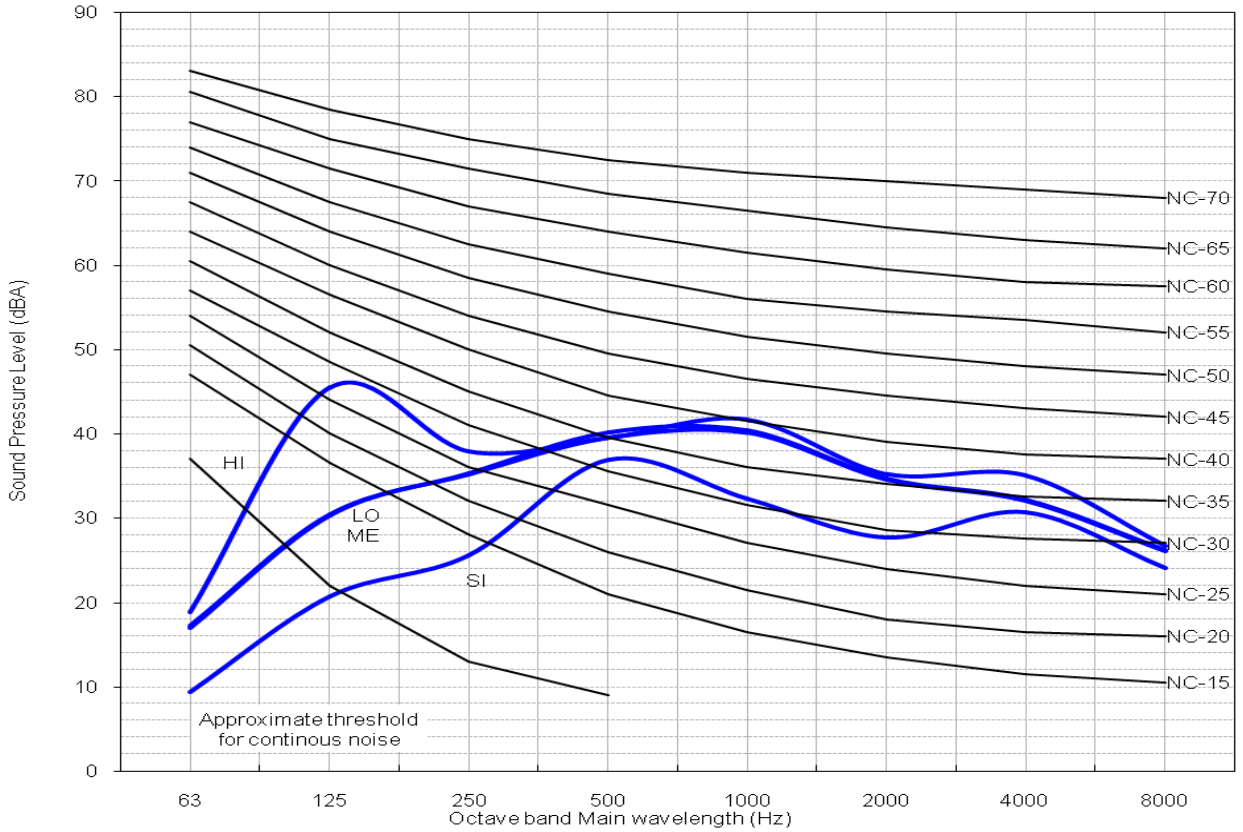

HEATING

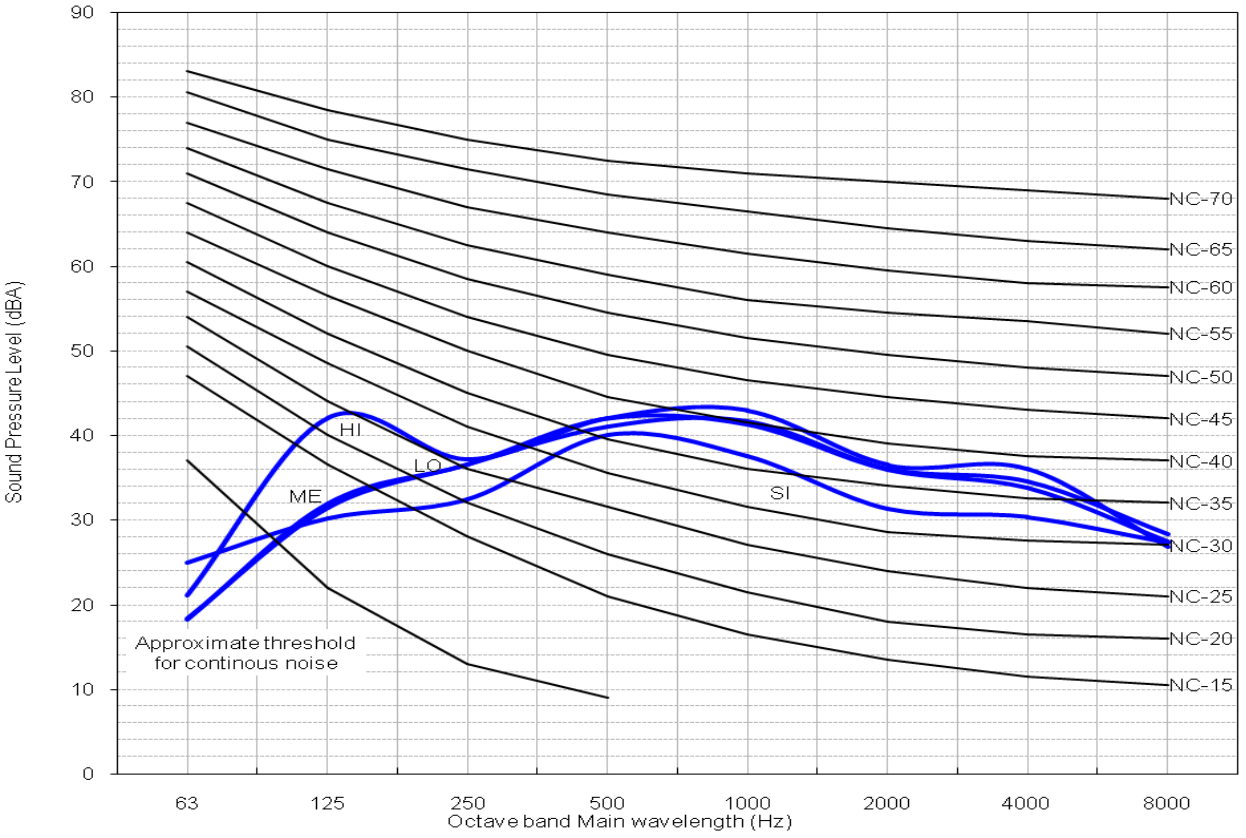

4.7.20. RAC-60WPA

COOLING

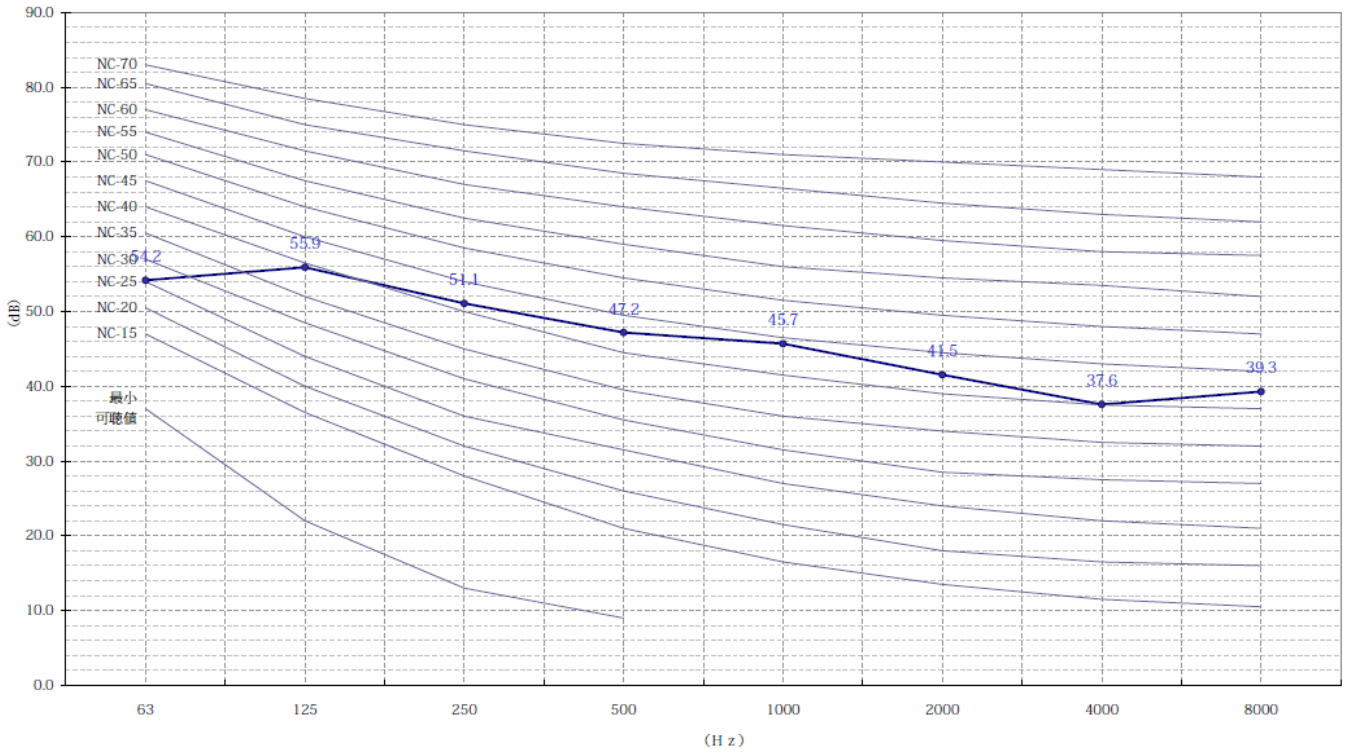

HEATING

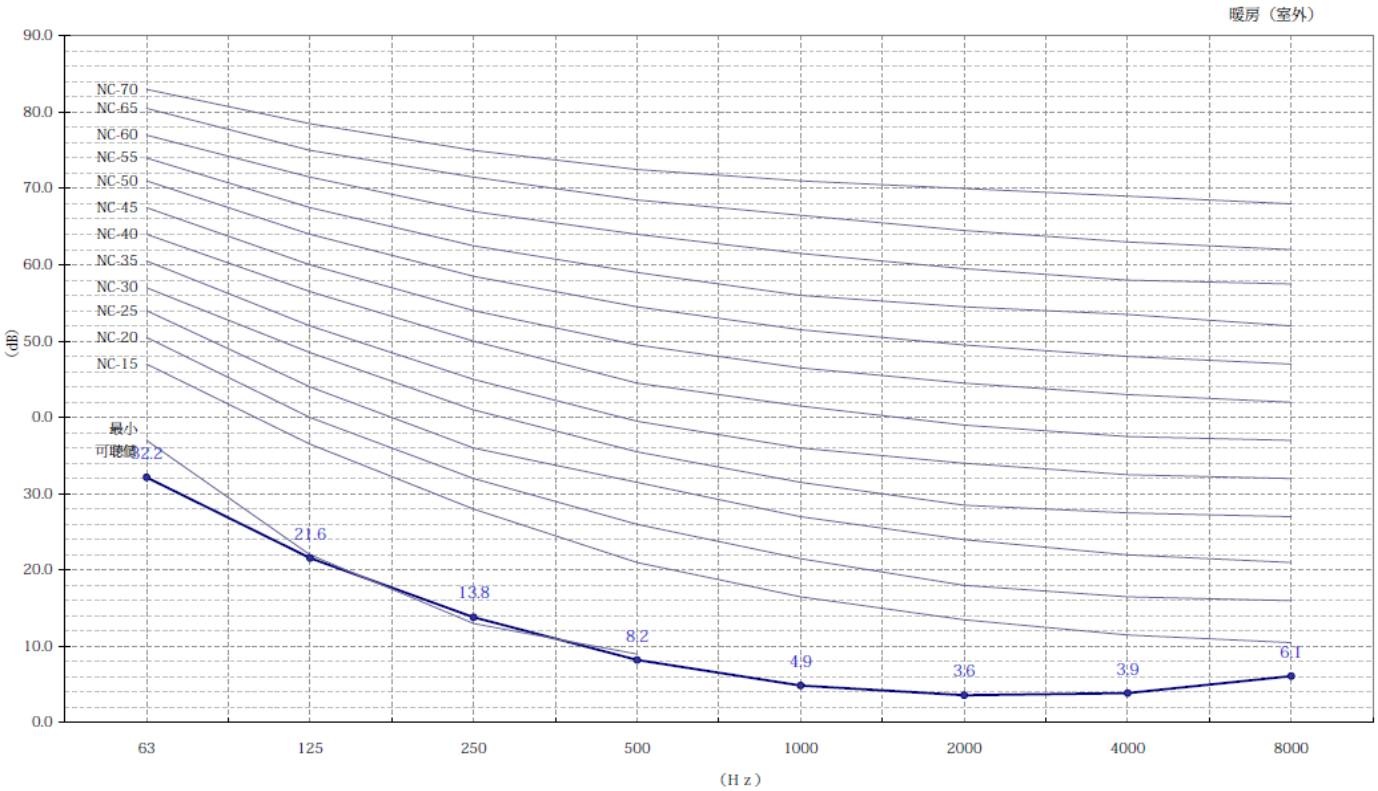

4.7.21. RAC-70WPA

COOLING

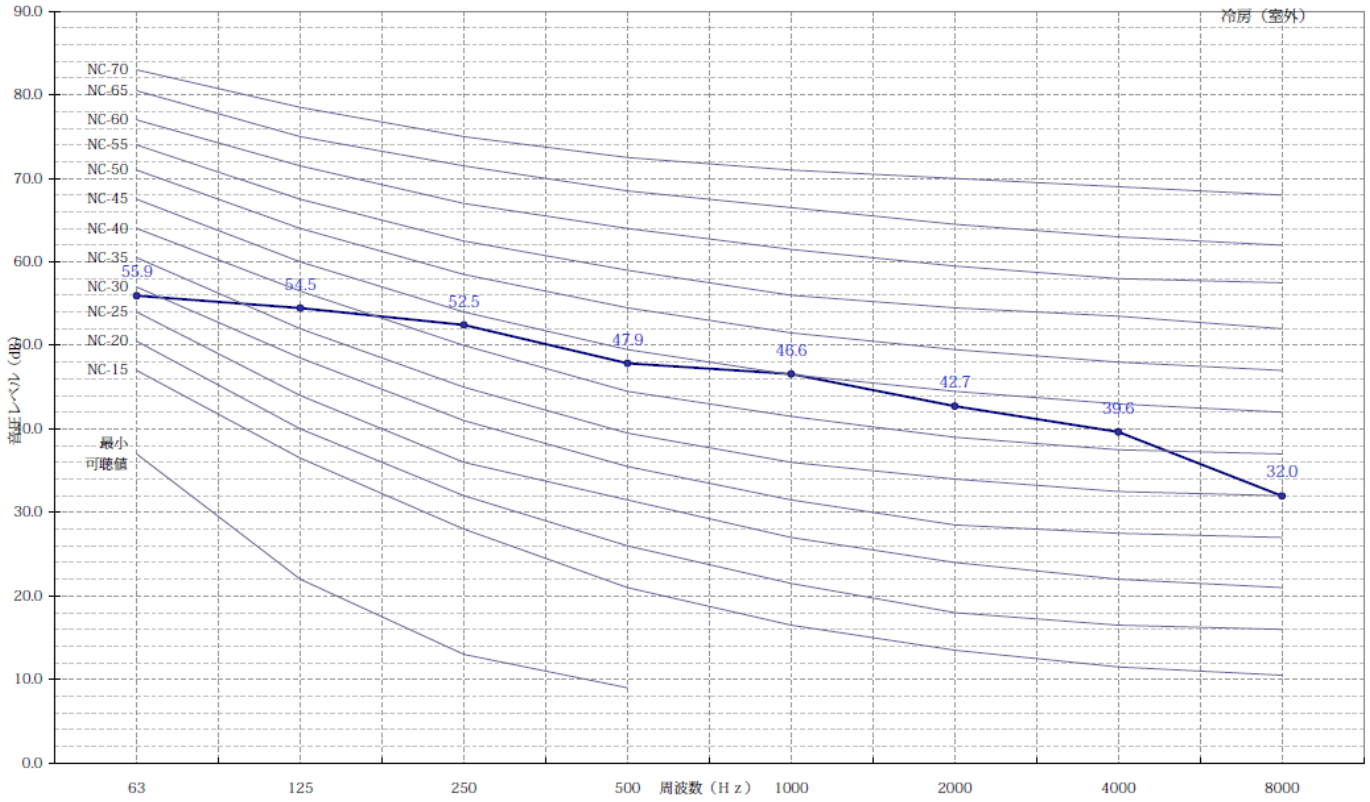

HEATING

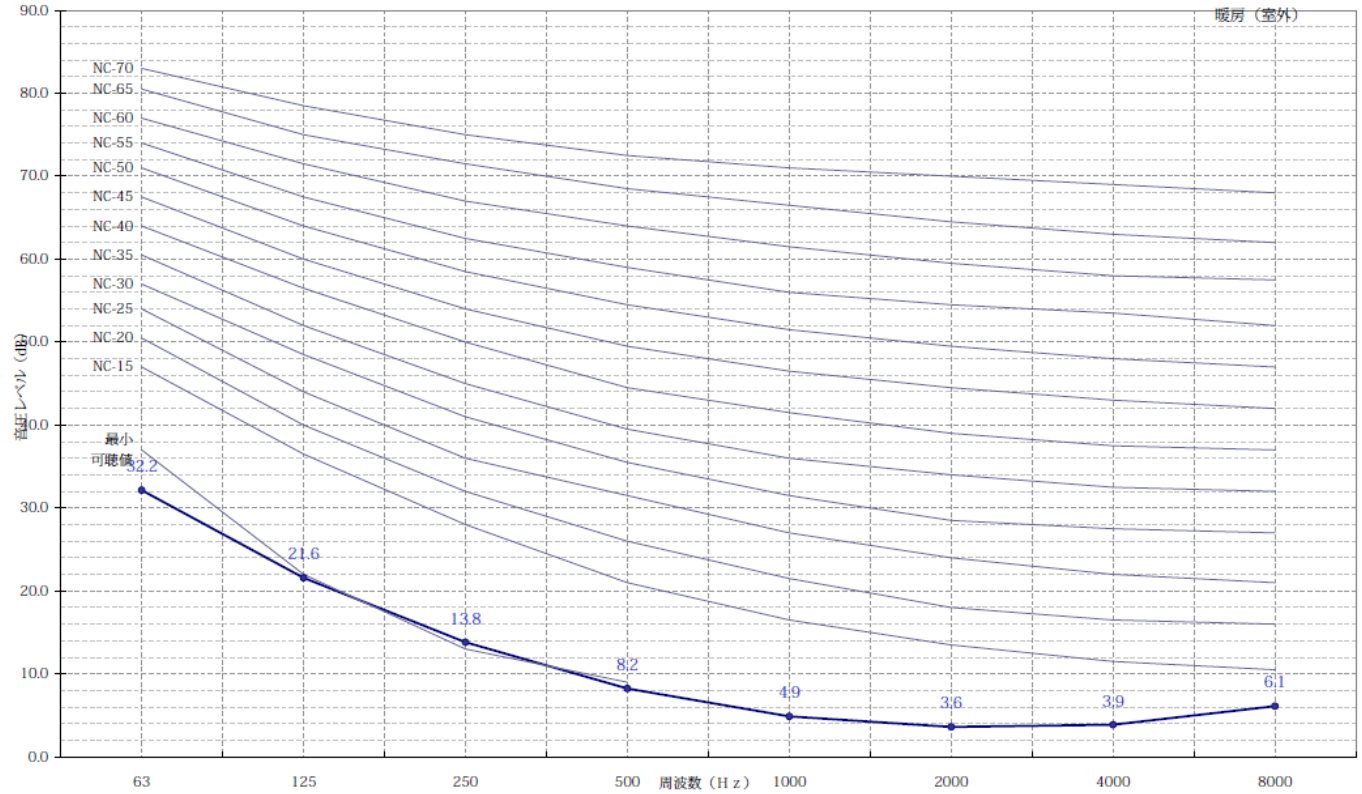

4.7.22. RAC-50DPA

COOLING

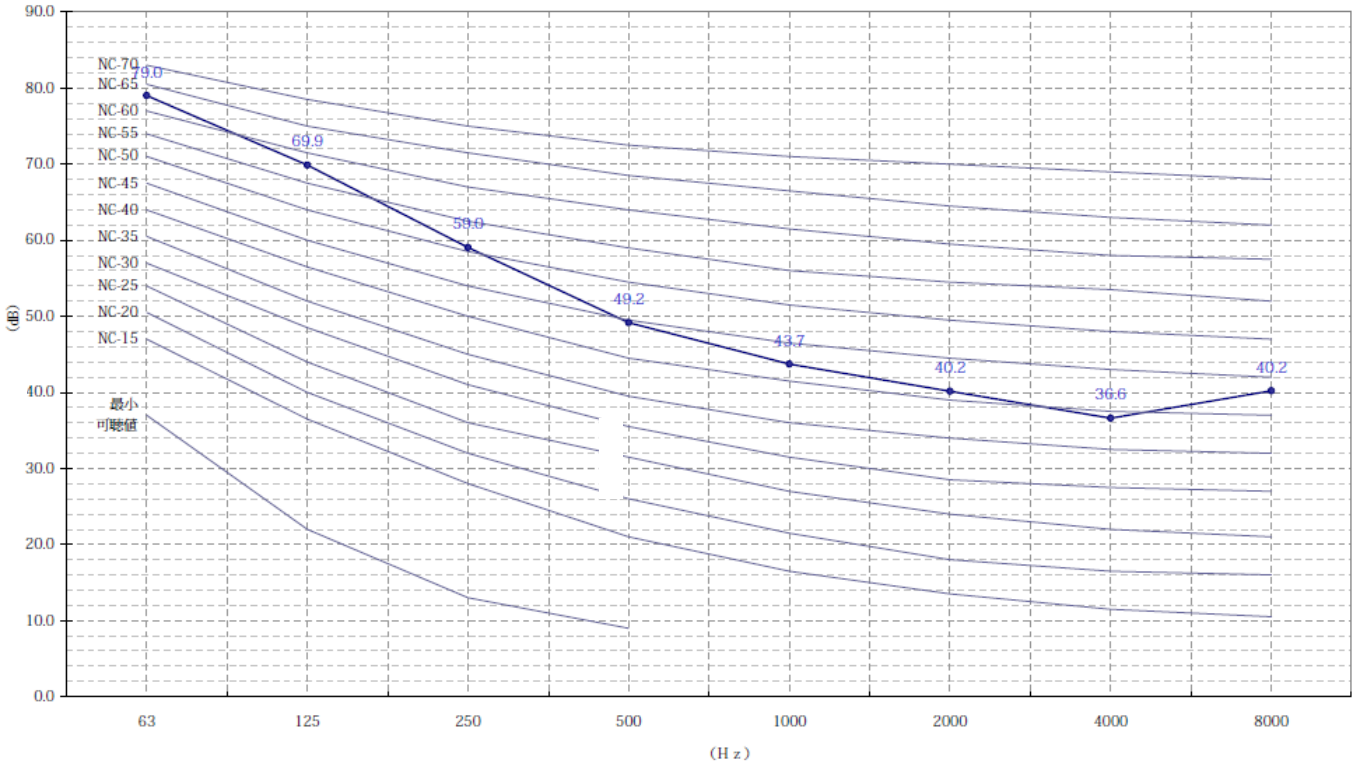

HEATING

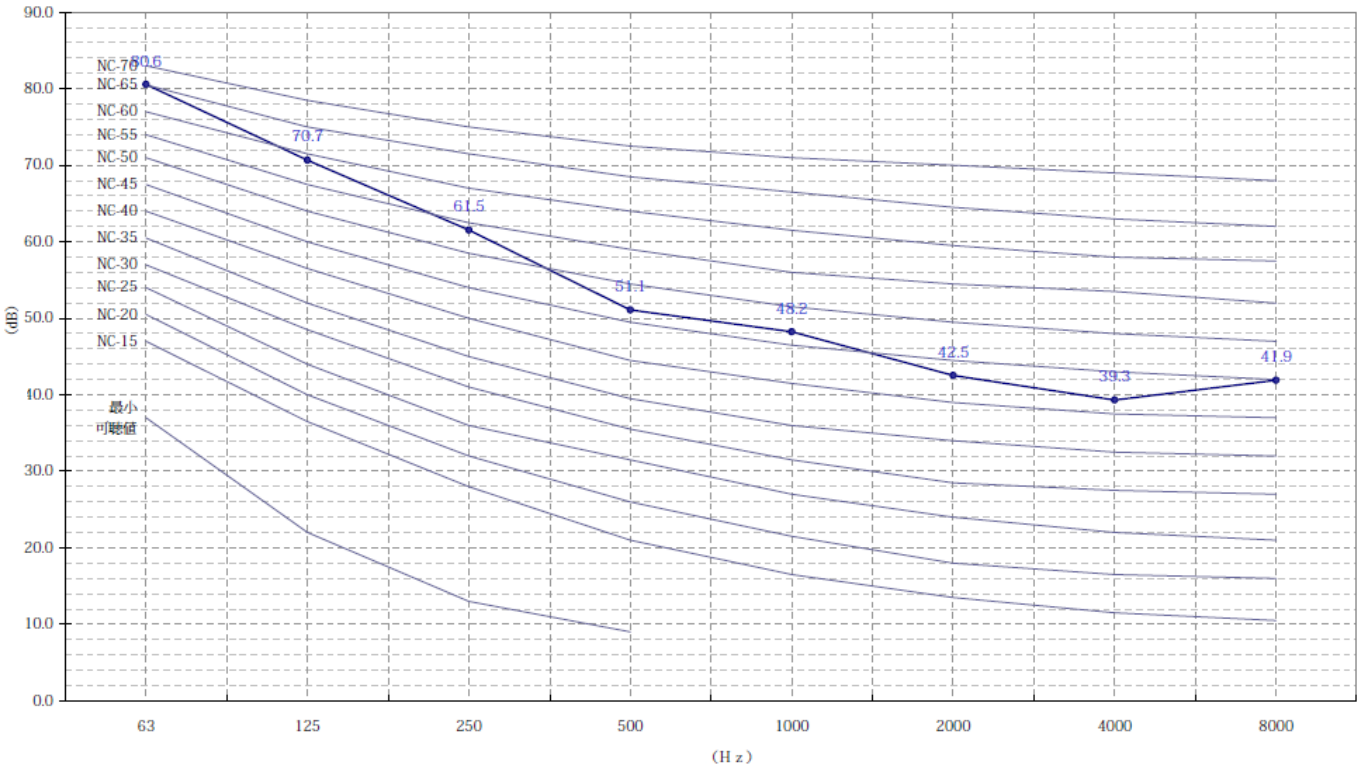

4.7.23. RAC-60DPA

COOLING

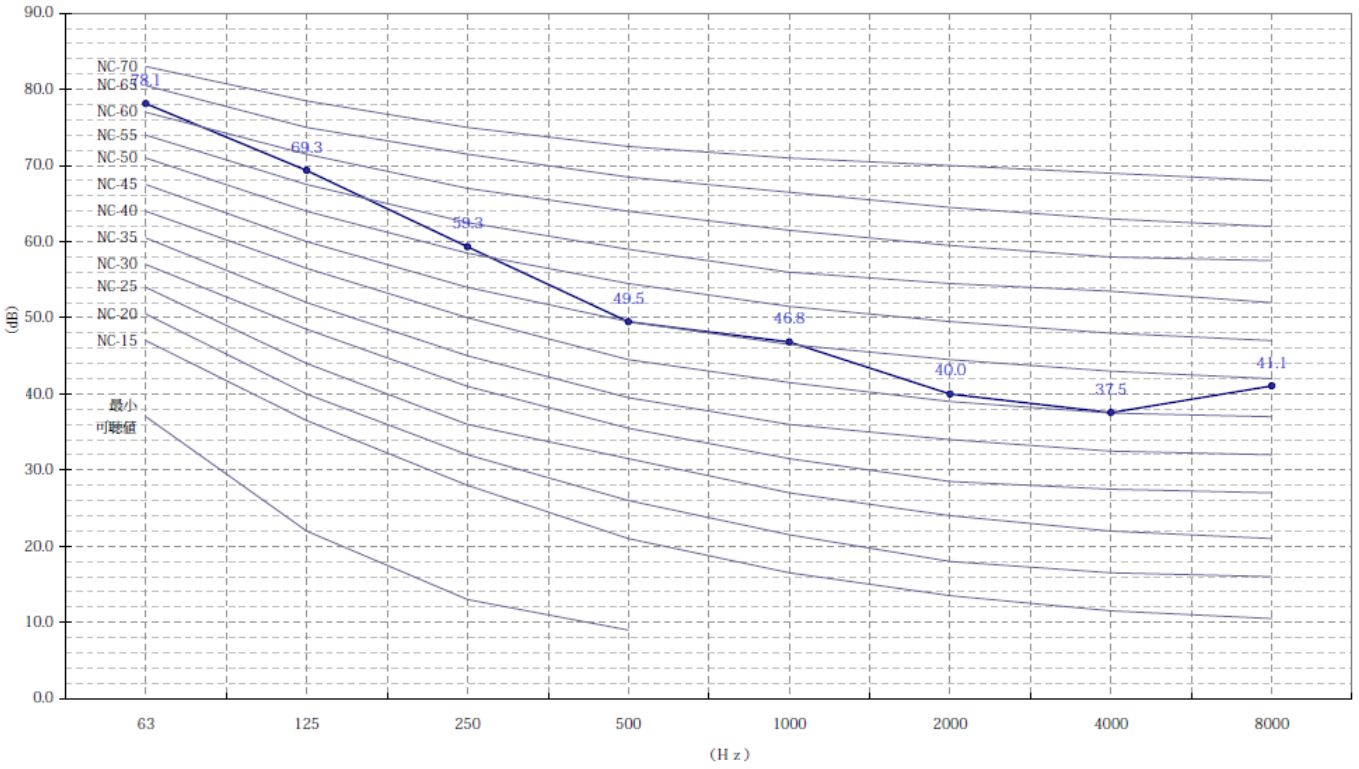

HEATING

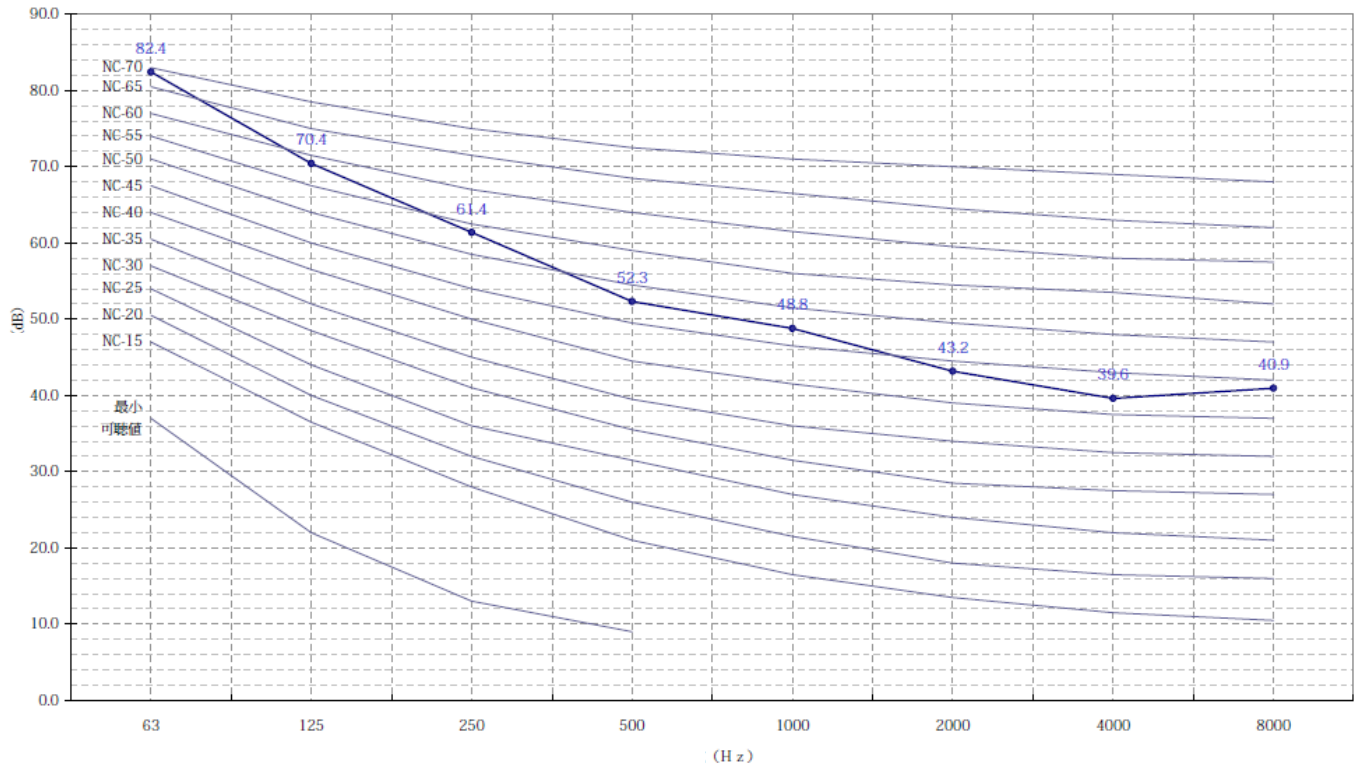

4.7.24. RAC-70DPA

COOLING

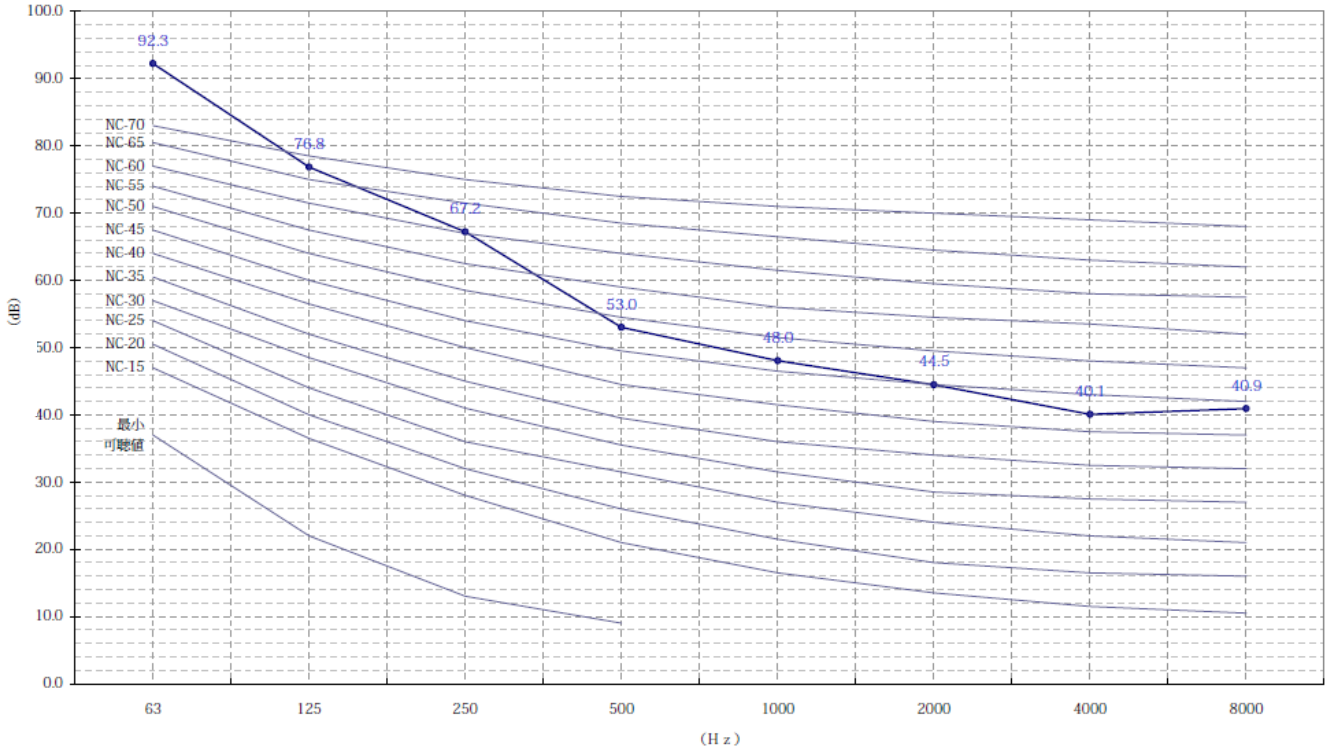

HEATING

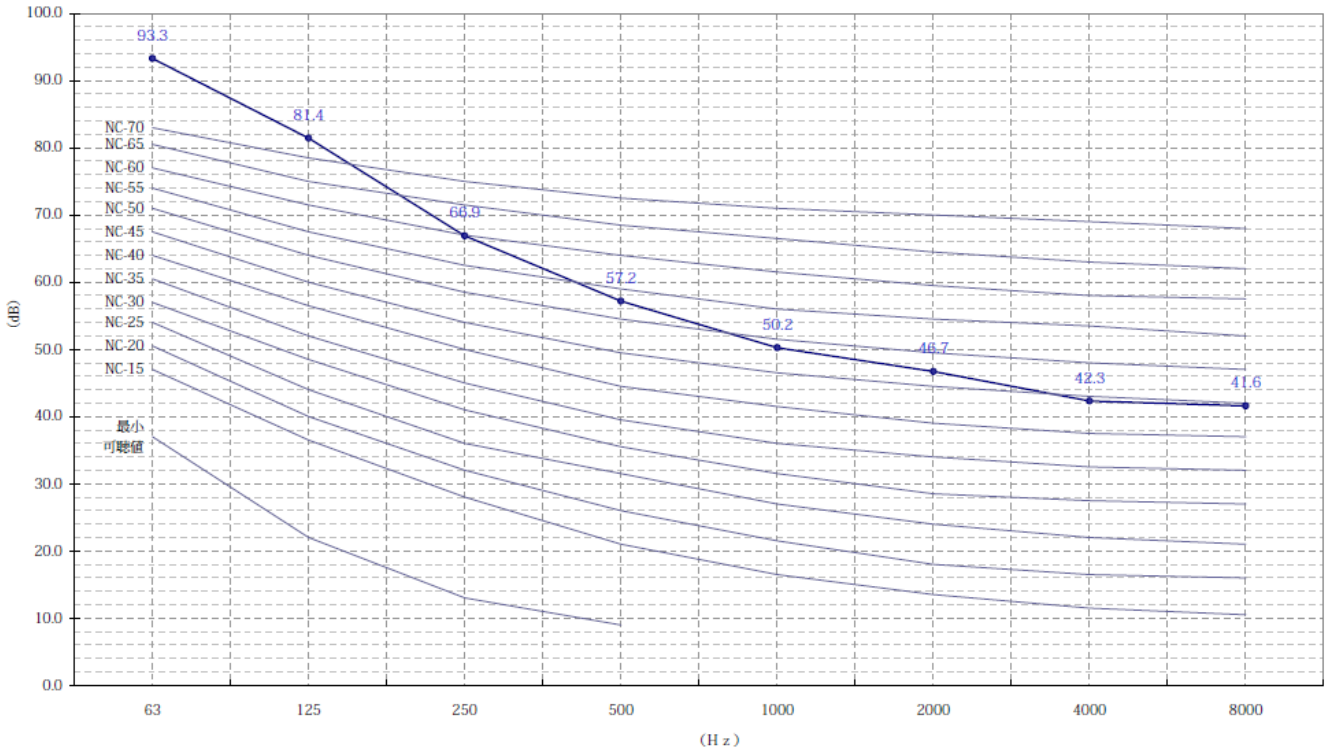

4.7.25. RAM-35NP2A

COOLING MODE

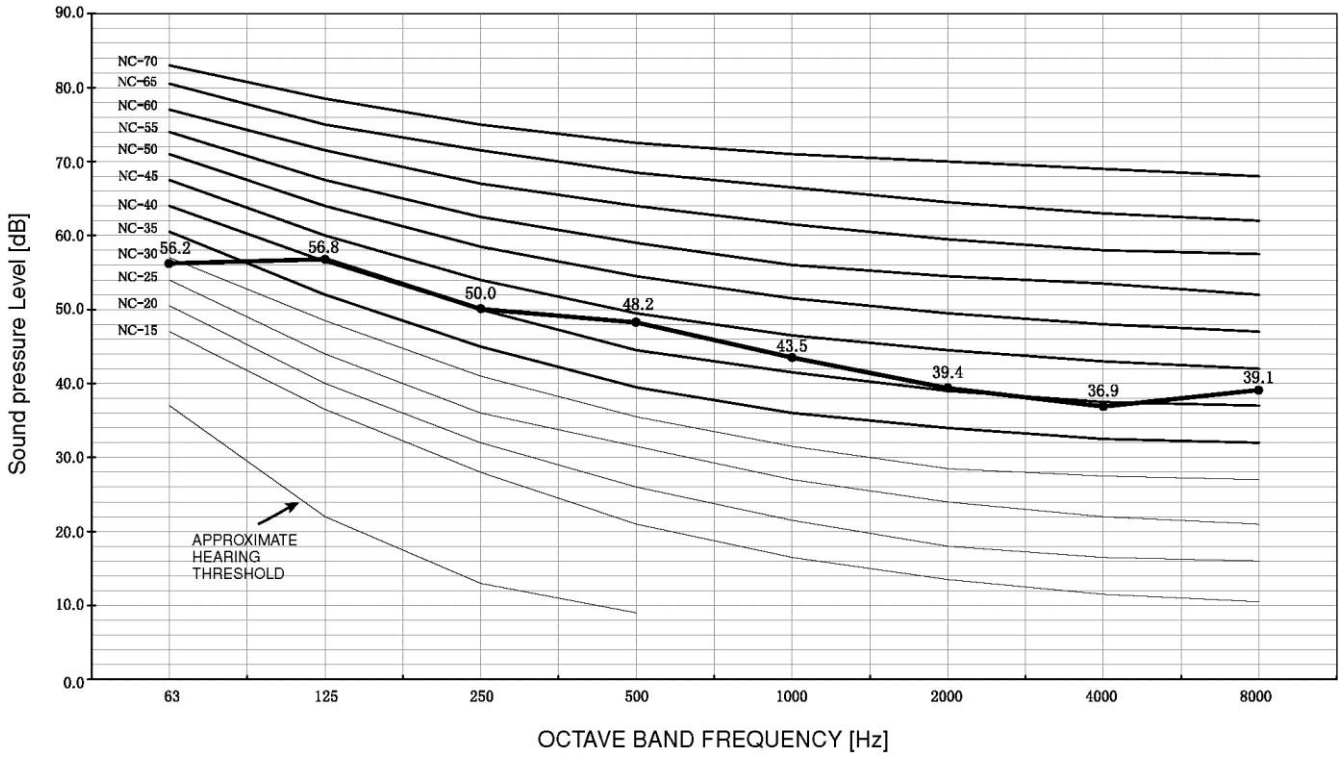

HEATING MODE

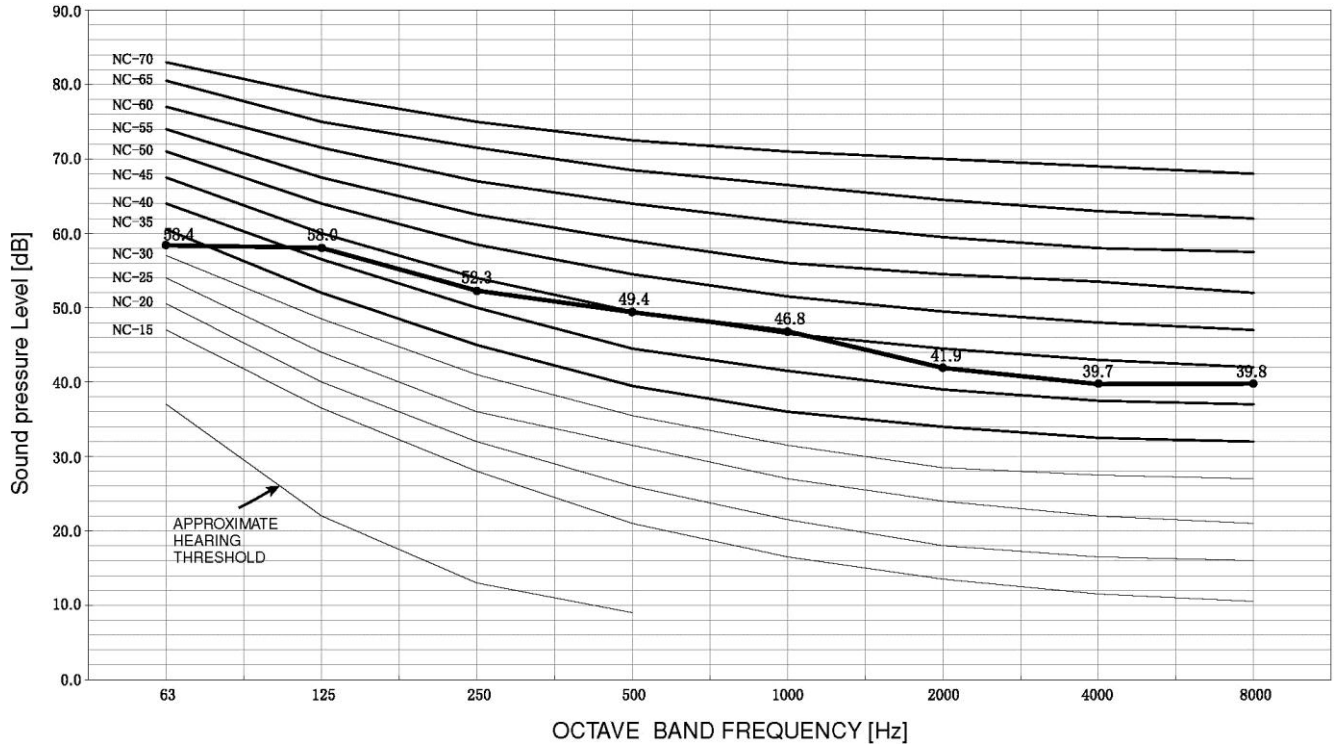

4.7.26. RAM-53NP2A / RAM-53NP3A

COOLING MODE

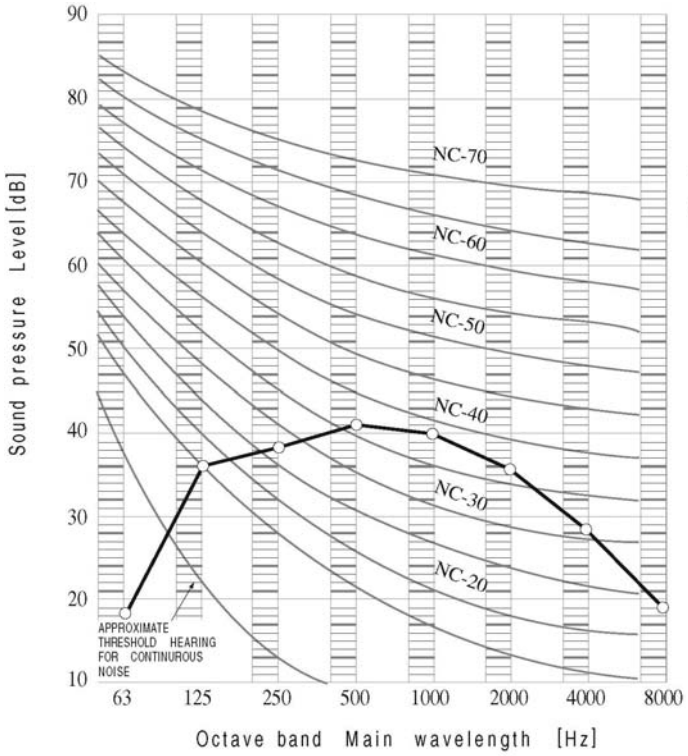

HEATING MODE

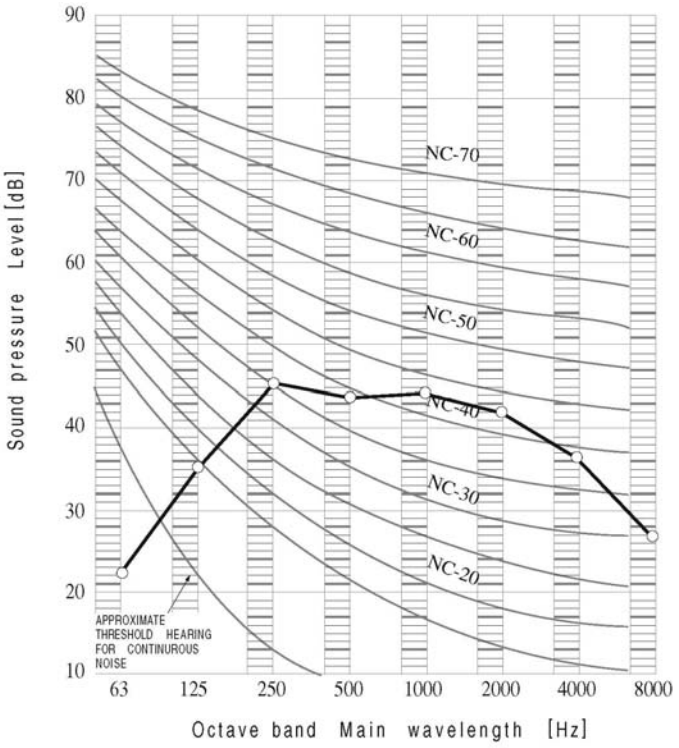

4.7.27. RAM-68NP3A

COOLING MODE

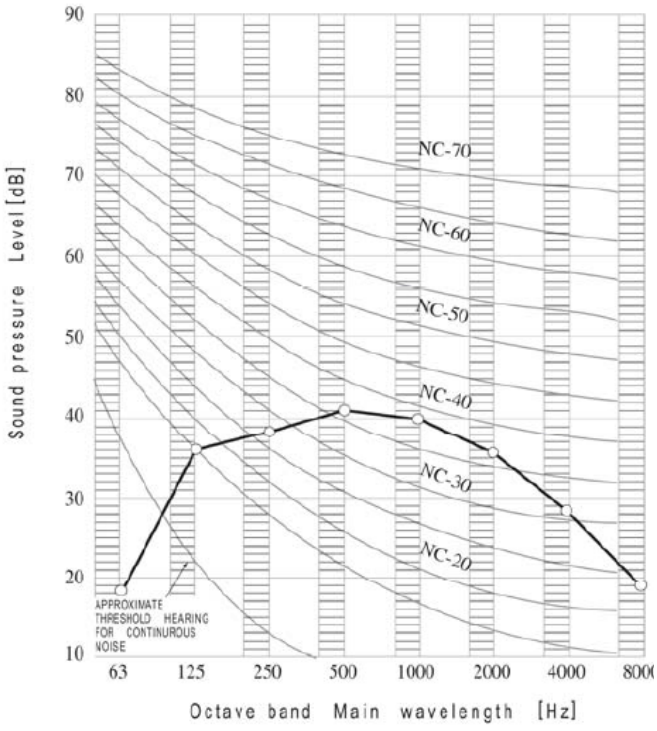

HEATING MODE

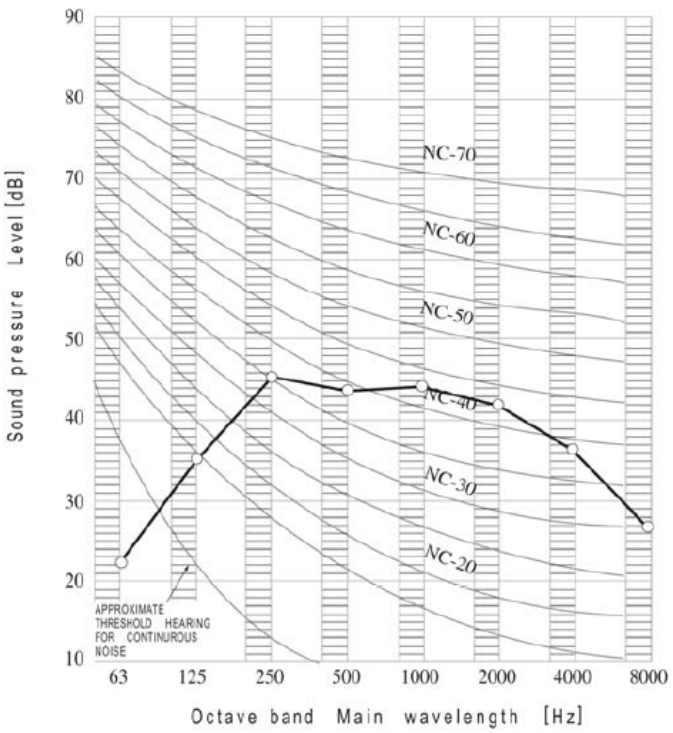

4.7.28. RAM-70NP4A

COOLING MODE

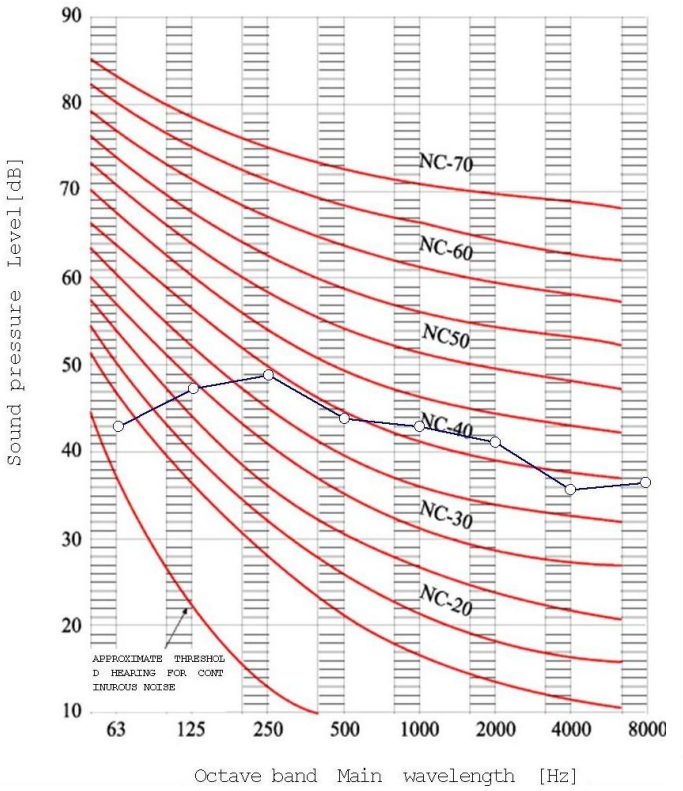

HEATING MODE

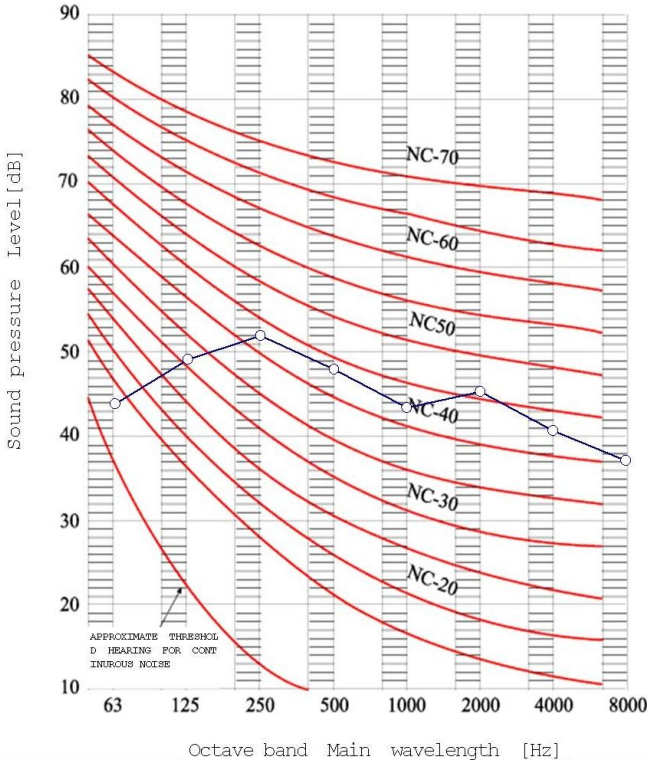

4.7.29. RAM-90NP5A

COOLING MODE

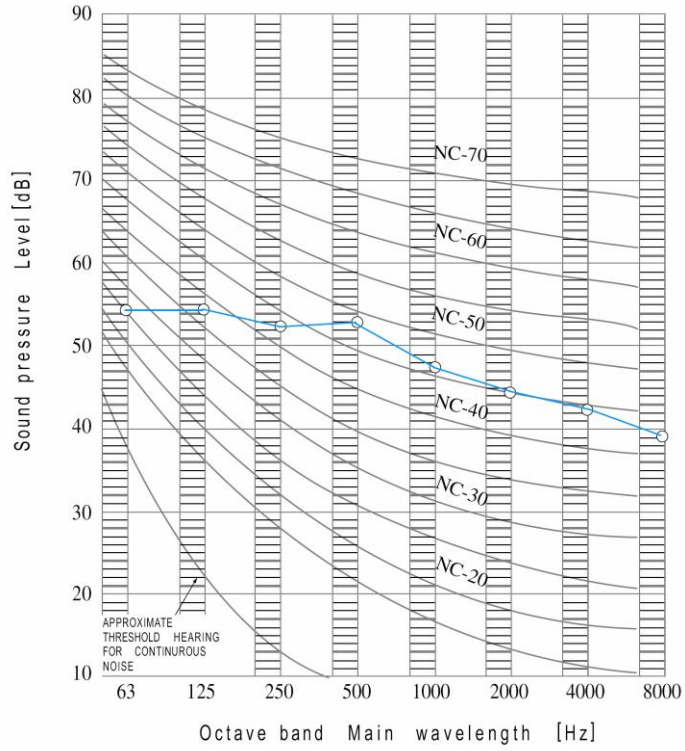

HEATING MODE

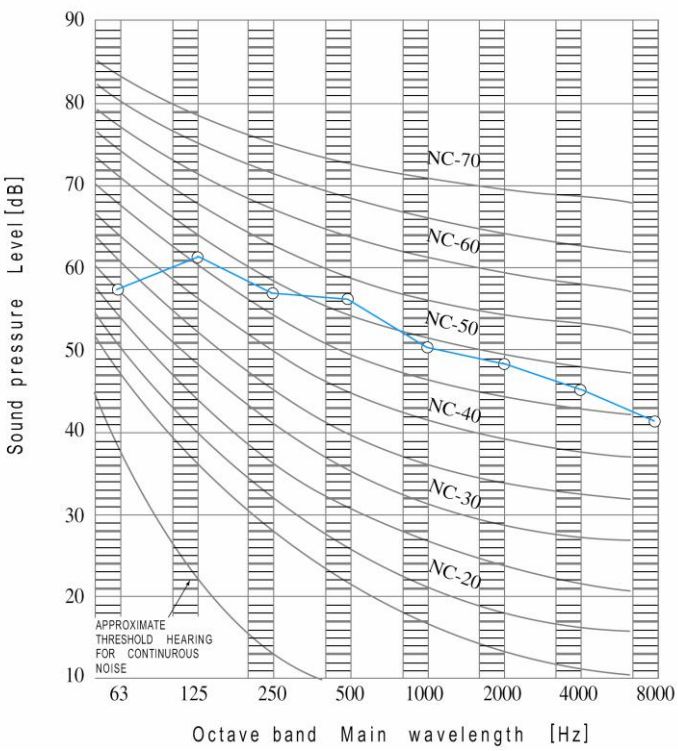

4.7.30. RAM-130NP6A

COOLING MODE

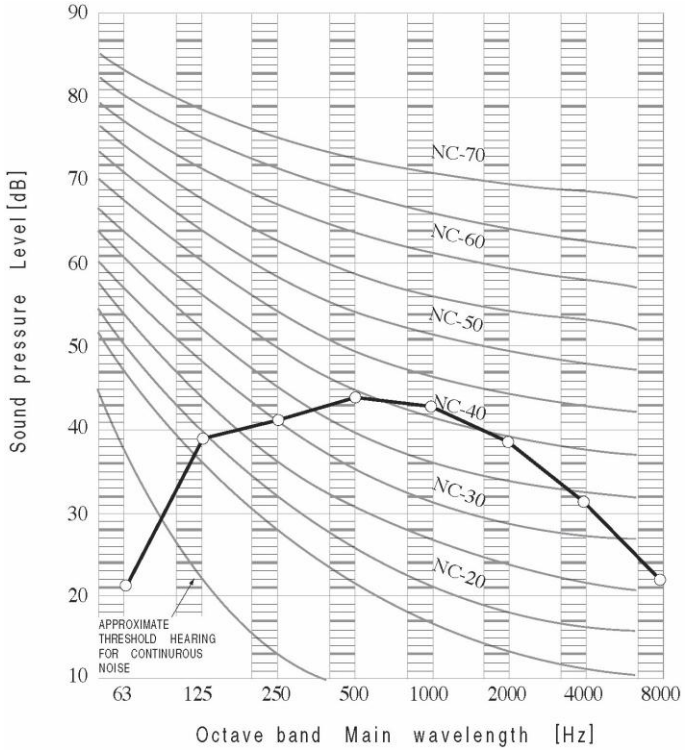

HEATING MODE

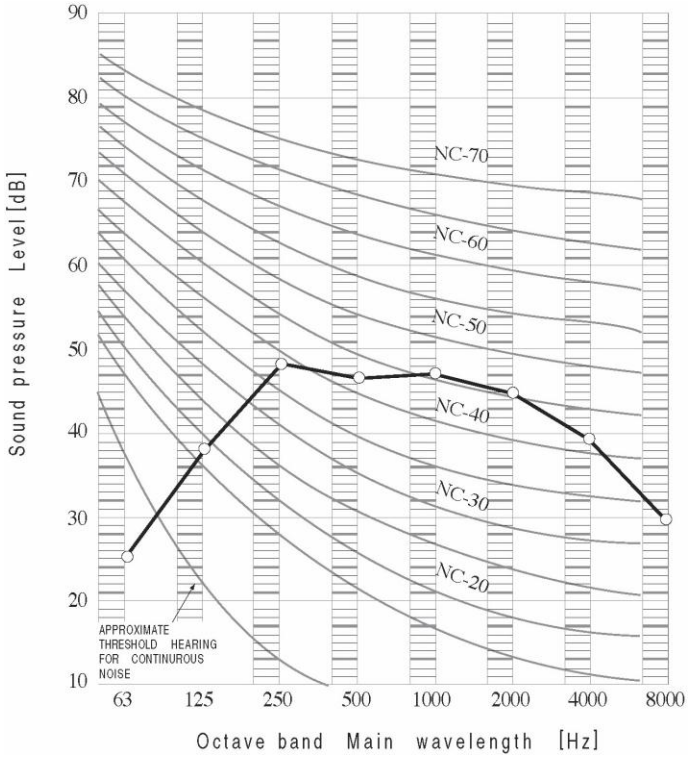

5 WORKING RANGE

CONTENTS

5 WORKING RANGE 5-1
5.1. Power Supply 5-2
5.2. Working Range 5-2
5.2.1. MONO SPLIT - PREMIUM 5-2
5.2.2. MULTIZONE/MONOZONE/MONO SPLIT 5-3

5.1. POWER SUPPLY

Working Voltage	198V ~ 264V
Voltage Imbalance	Within a 3% Deviation from Each Voltage at the Main Terminal of Outdoor Unit
Starting Voltage	Higher than 85% of the Rated Voltage

5.2. WORKING RANGE

5.2.1. MONO SPLIT - PREMIUM

Applicable models:

PREMIUM	
RAC-18WSA	RAC-18WSAN
RAC-25WSA	RAC-25WSAN
RAC-35WSA	RAC-35WSAN

The temperature range is indicated in the following table.

Cooling

working range	min (°C)	max (°C)	rated (°C)
outdoor	22	43	35
indoor	16	32	27

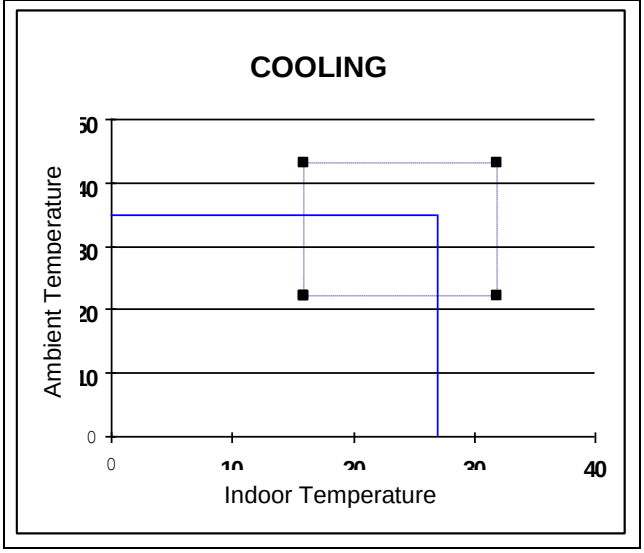

Heating

working range	min (°C)	max (°C)	rated (°C)
outdoor	-20	21	7
indoor	16	32	20

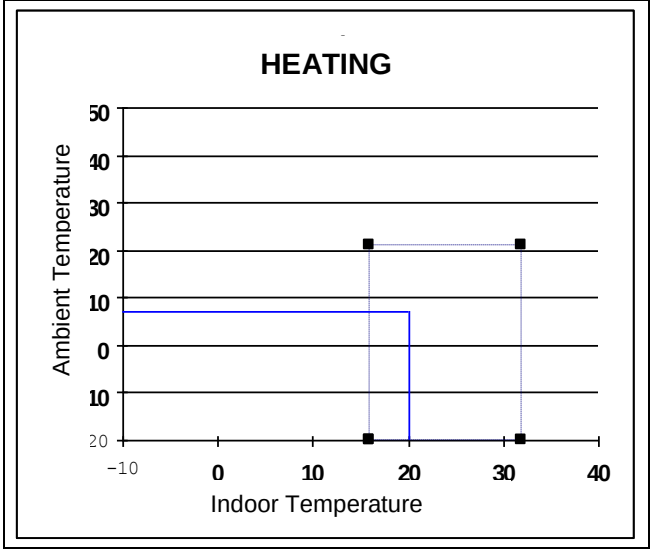

5.2.2. MULTIZONE/MONOZONE/MONO SPLIT

Applicable models:

MULTIZONE	MONOZONE	MONO SPLIT		
RAM-36NP2A	RAC-25NPA	RAC-25WXA	RAC-18WPA	RAC-50DPA
RAM-53NP2A	RAC-35NPA	RAC-35WXA	RAC-25WPA	RAC-60DPA
RAM-53NP3A	RAC-50NPA	RAC-50WXA	RAC-35WPA	RAC-70DPA
RAM-68NP3A		RAC-50WPA	RAC-25FXA	RAC-25FPA
RAM-70NP4A		RAC-60WPA	RAC-35FXA	RAC-35FPA
RAM-90NP5A		RAC-70WPA	RAC-50FXA	RAC-50FPA
RAM-130NP6A				

The temperature range is indicated in the following table.

Cooling

working range	min (°C)	max (°C)	rated (°C)
outdoor	-10	43	35
indoor	16	32	27

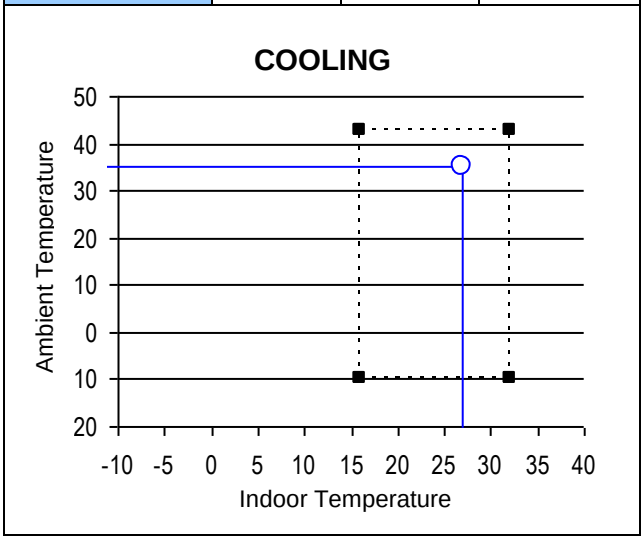

Heating

working range	min (°C)	max (°C)	rated (°C)
outdoor	-15	21	7
indoor	16	27	20

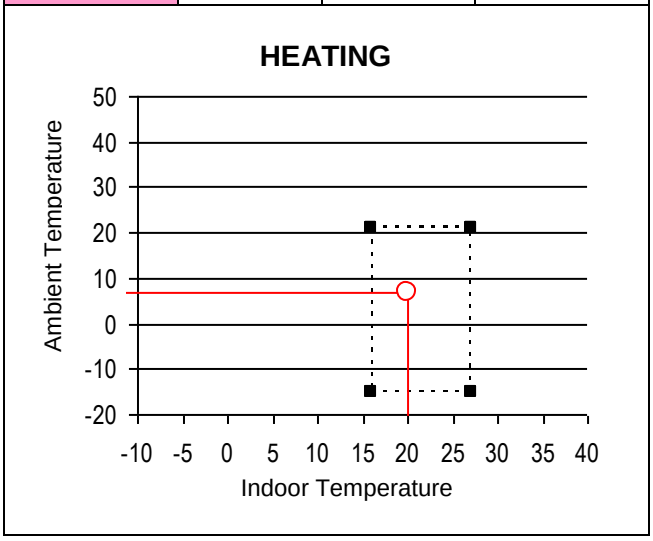

Applicable models:

MONO SPLIT
RAC-18WEA
RAC-25WEA
RAC-35WEA
RAC-50WEA

The temperature range is indicated in the following table.

Cooling

working range	min (°C)	max (°C)	rated (°C)
outdoor	-10	43	35
indoor	21	32	27

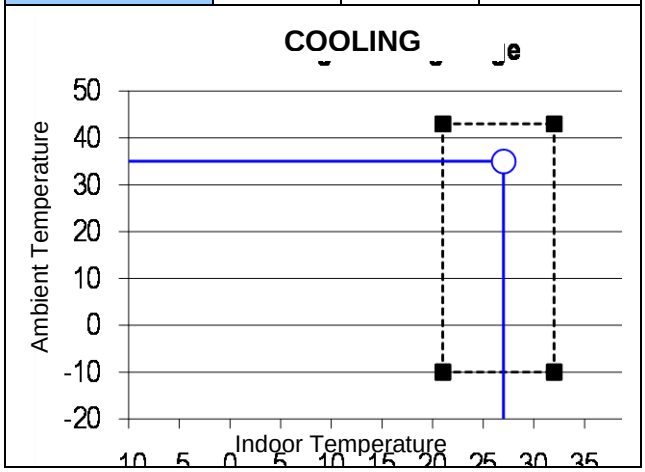

Heating

working range	min (°C)	max (°C)	rated (°C)
outdoor	-15	21	7
indoor	20	27	20

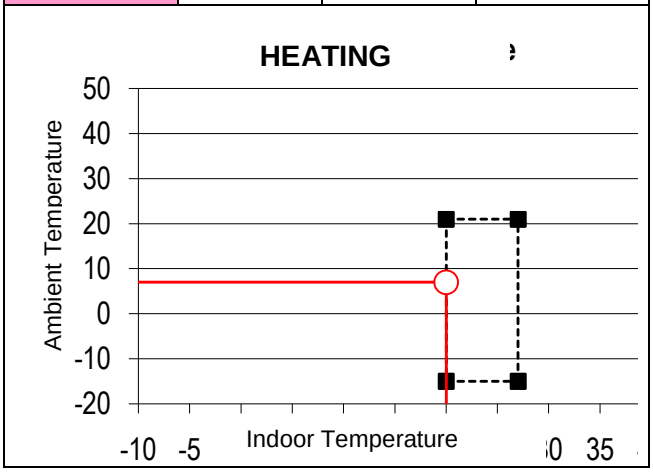

Applicable models:

MONO SPLIT
RAC-18WSPA
RAC-25WSPA
RAC-35WSPA

The temperature range is indicated in the following table.

Cooling

working range	min (°C)	max (°C)	rated (°C)
outdoor	-10	43	35
indoor	21	32	27

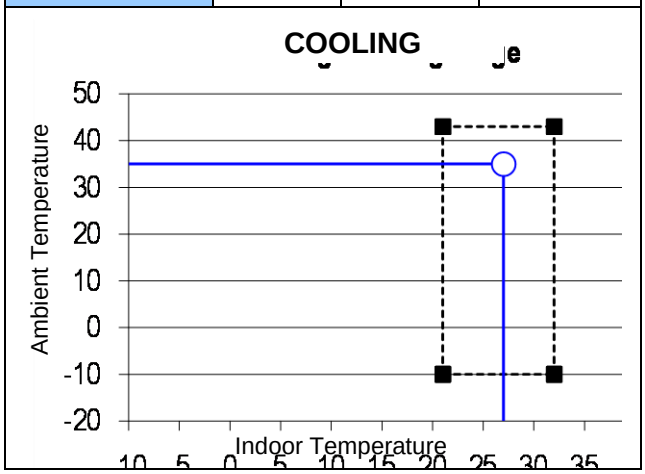

Heating

working range	min (°C)	max (°C)	rated (°C)
outdoor	-20	21	7
indoor	20	27	20

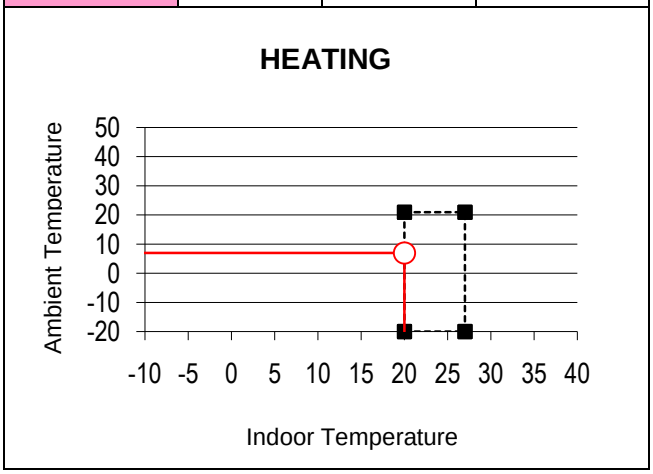

6 ELECTRICAL DATA

CONTENTS

6 ELECTRICAL DATA 6-1
6.1. Indoor Unit 6-2
6.2. Outdoor Unit 6-4

6.1. INDOOR UNIT

Model	Unit Main Power		Applicable Current		Indoor Fan Motor	
	VOL, PH, Hz	Fuse Rating (A)	STC	RNC	RNC	IPT
RAK-18QXA	DC35V	from outdoor	(C) 2.6 (H) 3.2	refer outdoor	0.58	25
RAK-25QXA	DC35V	from outdoor	(C) 3.2 (H) 4.0	refer outdoor	0.58	25
RAK-35QXA	DC35V	from outdoor	(C) 5.0 (H) 5.0	refer outdoor	0.58	25
RAK-50QXA	DC35V	from outdoor	(C) 8.2 (H) 9.0	refer outdoor	0.58	25
RAK-18QPA	DC35V	from outdoor	(C) 2.6 (H) 3.2	refer outdoor	0.78	25
RAK-25QPA	DC35V	from outdoor	(C) 2.6 (H) 3.2	refer outdoor	0.78	25
RAK-35QPA	DC35V	from outdoor	(C) 2.6 (H) 3.2	refer outdoor	0.78	25
RAK-50QPA	DC35V	from outdoor	(C) 2.6 (H) 3.2	refer outdoor	0.78	25
RAI-25RPA	DC35V	from outdoor	(C) 3.2 (H) 4.4	(C) 3.2 (H) 4.3	0.86	25
RAI-35RPA	DC35V	from outdoor	(C) 5.1 (H) 6.2	(C) 5.1 (H) 6.2	0.86	25
RAI-50RPA	DC35V	from outdoor	(C) 9.2 (H) 10.0	(C) 9.1 (H) 9.9	0.86	25
RAD-18RPA	DC35V	from outdoor	(C) 2.6 (H) 3.2	(C) 2.6 (H) 3.2	0.71	20
RAD-25RPA	DC35V	from outdoor	(C) 3.2 (H) 4.5	(C) 3.2 (H) 4.5	0.71	20
RAD-35RPA	DC35V	from outdoor	(C) 5.7 (H) 7.9	(C) 5.7 (H) 7.8	0.71	20
RAD-50RPA	DC35V	from outdoor	(C) 9.2 (H) 10.6	(C) 9.1 (H) 9.9	0.71	20
RAF-25QXA	DC35V	from outdoor	(C) 3.1 (H) 4.0	refer outdoor	0.85	25
RAF-35QXA	DC35V	from outdoor	(C) 4.9 (H) 5.8	refer outdoor	0.85	25
RAF-50QXA	DC35V	from outdoor	(C) 7.2 (H) 8.2	refer outdoor	0.85	25
RAF-25RPA	DC35V	from outdoor	(C) 3.43/(H)4.11	(C) 3.4 (H)4.1	0.8	28
RAF-35RPA	DC35V	from outdoor	(C) 4.30/(H)4.81	(C) 4.3 (H)4.8	0.8	28
RAF-50RPA	DC35V	from outdoor	(C) 6.63/(H)7.29	(C) 6.6 (H)7.3	0.8	28
RAK-18PSA	220~230, 1, 50	25	(C) 1.89/(H)2.27	(C) 2.8 (H)3.4	0.06	14
RAK-25PSA	220~230, 1, 50	25	(C) 2.81/(H)3.37	(C) 4.6 (H)4.5	0.06	14
RAK-35PSA	220~230, 1, 50	25	(C) 4.63/(H)4.54	(C) 7.0 (H)3.8	0.06	14
RAK-18PSAN	220~230, 1, 50	25	(C) 1.70/(H)2.13	(C) 1.9 (H)2.3	0.06	14
RAK-25PSAN	220~230, 1, 50	25	(C) 2.54/(H)3.13	(C) 2.8 (H)3.4	0.06	14
RAK-35PSAN	220~230, 1, 50	25	(C) 4.52/(H)4.68	(C) 4.6 (H)4.5	0.06	14

Model	Unit Main Power		Applicable Current		Indoor Fan Motor	
	VOL, PH, Hz	Fuse Rating (A)	STC	RNC	RNC	IPT
RAK-18PSPA	TBA	TBA	TBA	TBA	TBA	TBA
RAK-25PSPA	TBA	TBA	TBA	TBA	TBA	TBA
RAK-35PSPA	TBA	TBA	TBA	TBA	TBA	TBA
RAK-25PXA	DC35V	from outdoor	(C) 2.97/(H)3.82	(C) 2.97/(H)3.82	0.68	24
RAK-35PXA	DC35V	from outdoor	(C) 4.21/(H)4.62	(C) 4.21/(H)4.62	0.68	24
RAK-50PXA	DC35V	from outdoor	(C) 7.2 (H) 8.0	(C) 6.8 (H) 87.7	0.58	25
RAK-18PPA	DC35V	from outdoor	(C) 3.58/(H)4.25	(C) 2.65/(H)2.84	0.57	20
RAK-25PPA	DC35V	from outdoor	(C) 5.00/(H)5.03	(C) 3.58/(H)4.25	0.57	20
RAK-35PPA	DC35V	from outdoor	(C) 5.00/(H)5.03	(C) 5.00/(H)5.03	0.57	20
RAK-50PPA	DC35V	16	10	(C)7.15 (H)7.6	0.78	25
RAK-60PPA	220~240, 1, 50/60	20	8.5	(C)8.5 (H)8.6	0.85	35
RAK-70PPA	220~240, 1, 50/60	30	9.95	(C)10.0 (H)10.1	0.85	35
RAK-18PEA	DC35V	from outdoor	(C) 2.97/(H)3.00	(C) 2.97/(H)3.00	0.57	20
RAK-25PEA	DC35V	from outdoor	(C) 3.58/(H)4.25	(C) 3.58/(H)4.25	0.57	20
RAK-35PEA	DC35V	from outdoor	(C) 5.00/(H)5.03	(C) 5.00/(H)5.03	0.57	20
RAK-50PEA	DC35V	from outdoor	(C) 6.85/(H)7.29	(C) 6.85/(H)7.29	0.57	20
RAF-25PXA	DC35V	from outdoor	(C) 3.1 (H) 4.0	(C) 2.7 (H) 3.7	0.85	25
RAF-35PXA	DC35V	from outdoor	(C) 4.9 (H) 5.8	(C) 4.7 (H) 5.6	0.85	25
RAF-50PXA	DC35V	from outdoor	(C) 7.2 (H) 8.2	(C) 7.2 (H) 8.2	0.85	25
RAD-50PPA	DC35V	from outdoor	(C) 6.4 (H) 7.3	(C) 6.4 (H) 7.3	0.25	56
RAD-60PPA	DC35V	from outdoor	(C) 8.6 (H) 9.8	(C) 8.6 (H) 9.8	0.25	56
RAD-70PPA	DC35V	from outdoor	(C) 11.6 (H) 10.7	(C) 11.6 (H) 10.7	0.25	56

VOL: Rated Unit Power Supply Voltage (V)
Hz: Frequency (Hz)
STC: Starting Current (A)
RNC: Running Current (A)
PH: Phase (ϕ)
IPT: Input (W)

6.2. OUTDOOR UNIT

Model	Unit Main Power				Compressor Motor					
	VOL, PH, Hz	Fuse Rating (A)	Min (V)	Max (V)	Locked Rotor Ampere (A)	STC	Cooling Operation		Heating Operation	
							RNC	IPT	RNC	IPT
RAC-25NPA	220 ~ 240, 1, 50	16	198	264	4	4.2	3.2	695	4.3	900
RAC-35NPA	220 ~ 240, 1, 50	16	198	264	5.8	6.1	5.1	1080	6.2	1320
RAC-50NPA	220 ~ 240, 1, 50	16	198	264	10	10	9.1	1780	9.9	1970
RAM-36NP2A	220 ~ 240, 1, 50	16	198	264	N/A	5.8	4.5	1190	5.7	1500
RAM-53NP2A	220 ~ 240, 1, 50	16	198	264	N/A	6.25	7.0	1189	8.2	1502
RAM-53NP3A	220 ~ 240, 1, 50	16	198	264	N/A	6.25	7.1	1189	7.7	1502
RAM-68NP3A	220 ~ 240, 1, 50	30	198	264	N/A	12.36	9.7	1650	10.5	2221
RAM-70NP4A	220 ~ 240, 1, 50	30	198	264	N/A	12.36	9.7	1650	9.7	2221
RAM-90NP5A	220 ~ 240, 1, 50	30	198	264	N/A	16	10.2	2230	11.3	2460
RAM-130NP6A	220 ~ 240, 1, 50	30	198	264	N/A	20	19.2	4190	17.4	3800
RAC-18WSA	220 ~ 230, 1, 50	25	198	253	N/A	1.8	1.89	301.1	2.27	376.4
RAC-25WSA	220 ~ 230, 1, 50	25	198	253	N/A	2.4	2.81	488.3	3.37	573.6
RAC-35WSA	220 ~ 230, 1, 50	25	198	253	N/A	3.25	4.63	806.5	4.54	806.1
RAC-18WSAN	220 ~ 230, 1, 50	25	198	253	N/A	1.8	1.89	301.1	2.27	376.4
RAC-25WSAN	220 ~ 230, 1, 50	25	198	253	N/A	2.4	2.81	488.3	3.37	573.6
RAC-35WSAN	220 ~ 230, 1, 50	25	198	253	N/A	3.25	4.63	806.5	4.54	806.1
RAC-18WSPA	TBA	TBA	TBA	TBA	TBA	TBA	1.73	TBA	2.14	TBA
RAC-25WSPA	TBA	TBA	TBA	TBA	TBA	TBA	2.69	TBA	3.11	TBA
RAC-35WSPA	TBA	TBA	TBA	TBA	TBA	TBA	4.35	TBA	4.26	TBA
RAC-25WXA	220~230, 1, 50	15	198	253	N/A	1.98	2.97	616.2	3.82	790.9
RAC-35WXA	220~230, 1, 50	15	198	253	N/A	2.73	4.21	976.7	4.32	1054.1
RAC-50WXA	220 ~ 230, 1, 50	16	198	253	N/A	8	6.83	1555	7.66	1745
RAC-18WPA	220~230, 1, 50	15	198	253	N/A	2.78	2.65	494.4	2.84	564
RAC-25WPA	220~230, 1, 50	15	198	253	N/A	3.16	3.58	690	4.25	907.9
RAC-35WPA	220~230, 1, 50	15	198	253	N/A	4.81	5.00	1101.9	5.03	1122.7
RAC-50WPA	220~240, 1, 50/60	16	198	264	N/A	10	7.2	1465	7.6	1900
RAC-60WPA	220~240, 1, 50/60	20	198	264	10	10	8.5	1850	8.6	1880
RAC-70WPA	220~230, 1, 50/60	20	198	264	12.3	9.95	9.95	2170	10.1	2200

Model	Unit Main Power				Compressor Motor					
	VOL, PH, Hz	Fuse Rating (A)	Min (V)	Max (V)	Locked Rotor Ampere (A)	STC	Cooling Operation		Heating Operation	
							RNC	IPT	RNC	IPT
RAC-18WEA	220~230, 1, 50	15	198	253	N/A	2.78	2.91	494.4	3.00	564
RAC-25WEA	220~230, 1, 50	15	198	253	N/A	3.16	3.58	690	4.25	907.9
RAC-35WEA	220~230, 1, 50	15	198	253	N/A	4.81	5.00	1101.9	5.03	1122.7
RAC-50WEA	220~230, 1, 50	15	198	253	N/A	7.24	6.85	1617	7.29	1709.5
RAC-25FXA	220~230, 1, 50	16	198	253	N/A	3.99	2.66	580	3.63	790
RAC-35FXA	220~230, 1, 50	16	198	253	N/A	5.84	4.68	1020	5.860	1220
RAC-50FXA	220 ~ 230, 1, 50	16	198	253	N/A	8.2	7.16	1560	8.17	1780
RAC-25FPA	220~230, 1,50	16	198	253	N/A	2.93	3.34	630.3	4.11	839.7
RAC-35FPA	220~230, 1,50	16	198	253	N/A	3.81	4.30	869	4.81	1063.2
RAC-50FPA	220~230, 1,50	16	198	253	N/A	4.46	6.63	1436.8	7.29	1652.9
RAC-50DPA	220 ~ 240, 1, 50	30	198	264	N/A	10	6.4	1400	7.3	1590
RAC-60DPA	220 ~ 240, 1, 50	30	198	264	N/A	10	8.55	1870	9.75	2130
RAC-70DPA	220 ~ 240, 1, 50	30	198	264	N/A	10	11.6	2530	10.7	2340

VOL: Rated Unit Power Supply Voltage (V)
HZ: Frequency (Hz)
STC: Starting Current (A)
RNC: Running Current (A)
PH: Phase (ϕ)
IPT: Input (W)

NOTE:

1. *The above compressor data is based on 100% capacity combination of indoor units at the rated operating frequency*
2. *This data is based on the same conditions as the nominal heating and cooling capacities.*
3. *The compressor started by an inverter, resulting in extremely low starting current.*

7 ELECTRICAL WIRING DIAGRAM

CONTENTS

7 ELECTRICAL WIRING DIAGRAM 7-1

7.1. MONOZONE/MULTIZONE 7-2

7.1.1. RAK-18QXA, RAK-25QXA, RAK-35QXA, RAK-50QXA 7-2
7.1.2. RAK-18QPA, RAK-25QPA, RAK-35QPA, RAK-50QPA 7-2
7.1.3. RAF-25QXA, RAF-35QXA, RAF-50QXA 7-3
7.1.4. RAF-25RPA, RAF-35RPA, RAF-50RPA 7-4
7.1.5. RAI-25RPA, RAI-35RPA, RAI-50RPA 7-4
7.1.6. RAD-18RPA, RAD-25RPA, RAD-35RPA, RAD-50RPA 7-5
7.1.7. RAC-25NPA, RAC-35NPA, RAC-50NPA 7-6
7.1.8. RAM-36NP2A 7-7
7.1.9. RAM-53NP2A 7-8
7.1.10. RAM-53NP3A 7-9
7.1.11. RAM-68NP3A 7-10
7.1.12. RAM-70NP4A 7-11
7.1.13. RAM-90NP5A 7-12
7.1.14. RAM-130NP6A (OUTDOOR 1) 7-13
7.1.15. RAM-130NP6A (OUTDOOR 2) 7-14

7.2. MONO - SPLIT 7-15

7.2.1. RAK-18PSA, RAK-25PSA, RAK-35PSA 7-15
7.2.2. RAK-18PSAN, RAK-25PSAN, RAK-35PSAN 7-16
7.2.3. RAC-18WSA, RAC-25WSA, RAC-35WSA, RAC-18WSAN, RAC-25WSAN, RAC-35WSAN 7-17
7.2.4. RAK-18PSPA, RAK-25PSPA, RAK-35PSPA 7-18
7.2.5. RAC-18WSPA, RAC-25WSPA, RAC-35WSPA 7-19
7.2.6. RAK-25PXA, RAK-35PXA, RAK-50PXA 7-20
7.2.7. RAC-25WXA, RAC-35WXA 7-21
7.2.8. RAC-50WXA 7-22
7.2.9. RAK-18PPA, RAK-25PPA, RAK-35PPA 7-23
7.2.10. RAC-18WPA, RAC-25WPA 7-24
7.2.11. RAC-35WPA 7-25
7.2.12. RAK-50PPA 7-26
7.2.13. RAC-50WPA 7-27
7.2.14. RAK-60PPA 7-28
7.2.15. RAC-60WPA 7-29
7.2.16. RAK-70PPA 7-30
7.2.17. RAC-70WPA 7-31
7.2.18. RAK-18PEA, RAK-25PEA, RAK-35PEA, RAK-50PEA 7-32
7.2.19. RAC-18WEA, RAC-25WEA 7-33
7.2.20. RAC-35WEA 7-34
7.2.21. RAC-50WEA 7-35
7.2.22. RAF-25PXA, RAF-35PXA, RAF-50PXA 7-36
7.2.23. RAC-25FXA, RAC-35FXA 7-37
7.2.24. RAC-50FXA 7-38
7.2.25. RAF-25RPA, RAF-35RPA, RAF-50RPA 7-39
7.2.26. RAC-25FPA, RAC-35FPA 7-40
7.2.27. RAC-50FPA 7-41
7.2.28. RAD-50PPA, RAD-60PPA, RAD-70PPA 7-42
7.2.29. RAC-50DPA, RAC-60DPA, RAC-70DPA 7-43

7.1. MONOZONE/MULTIZONE

7.1.1. RAK-18QXA, RAK-25QXA, RAK-35QXA, RAK-50QXA

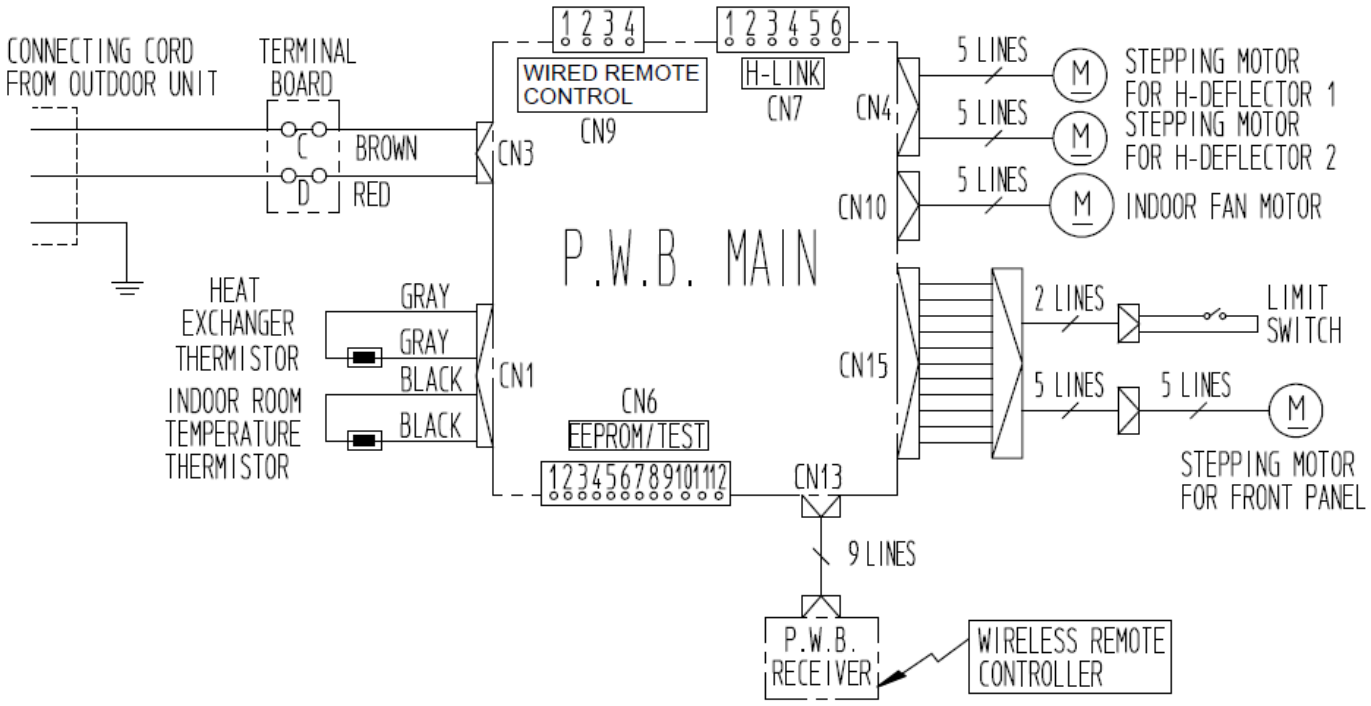

7.1.2. RAK-18QPA, RAK-25QPA, RAK-35QPA, RAK-50QPA

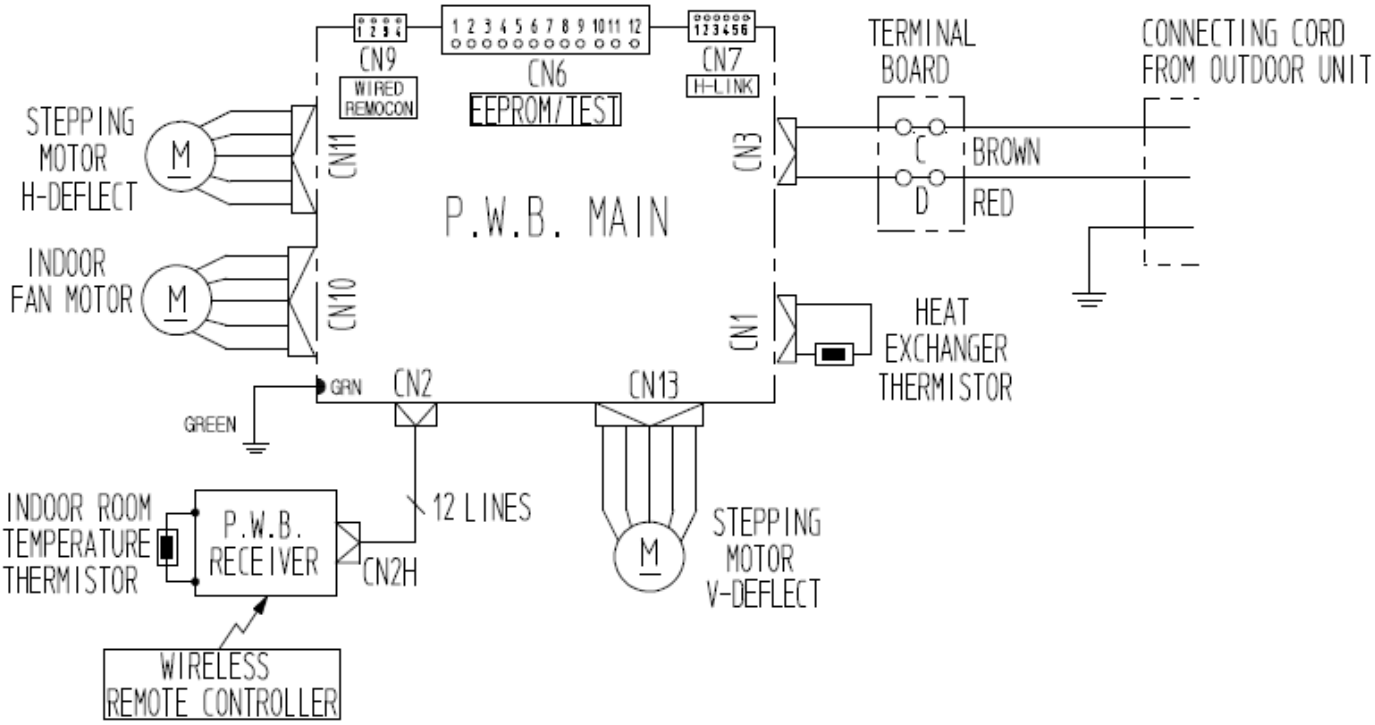

7.1.3. RAF-25QXA, RAF-35QXA, RAF-50QXA

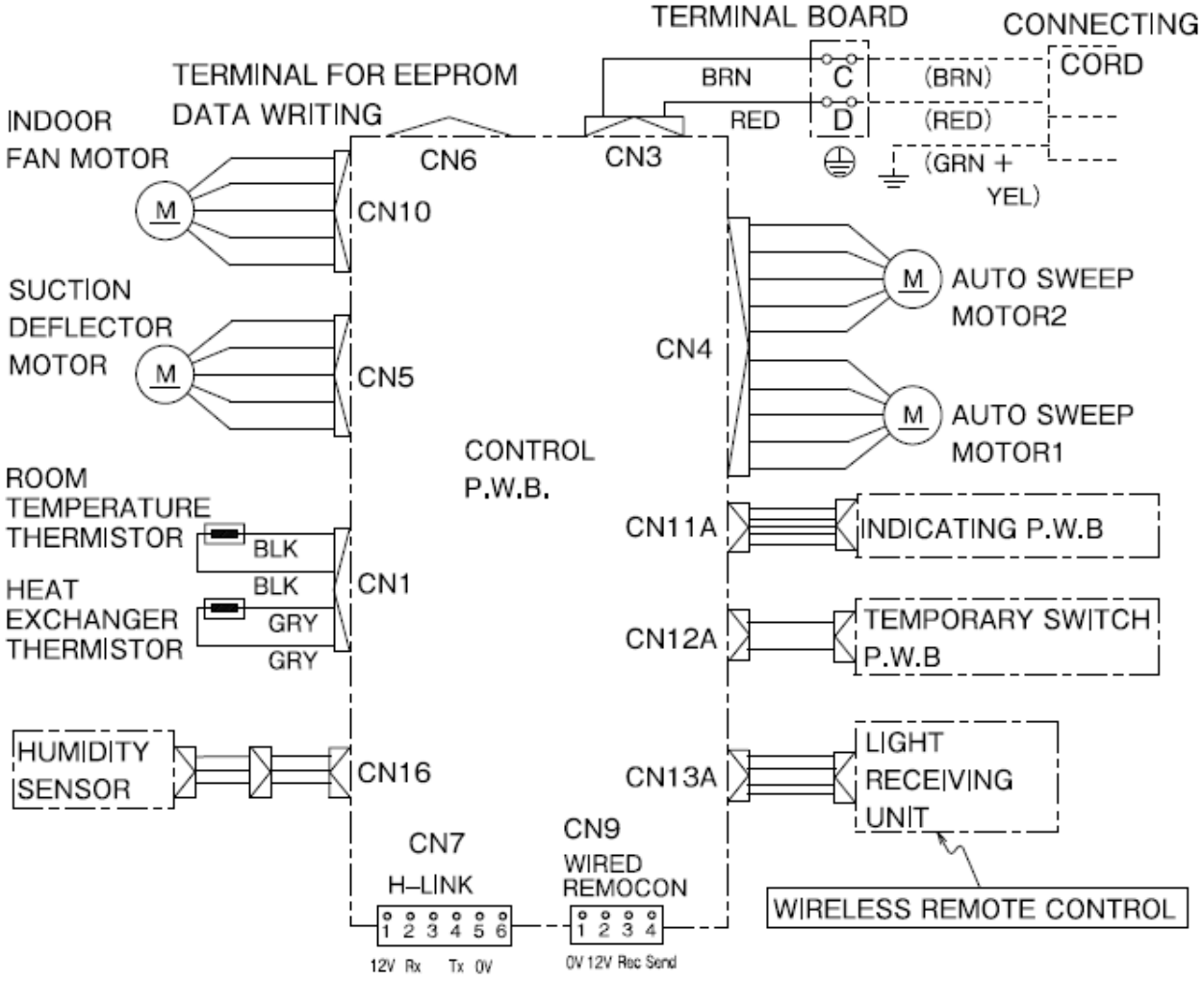

7.1.4. RAF-25RPA, RAF-35RPA, RAF-50RPA

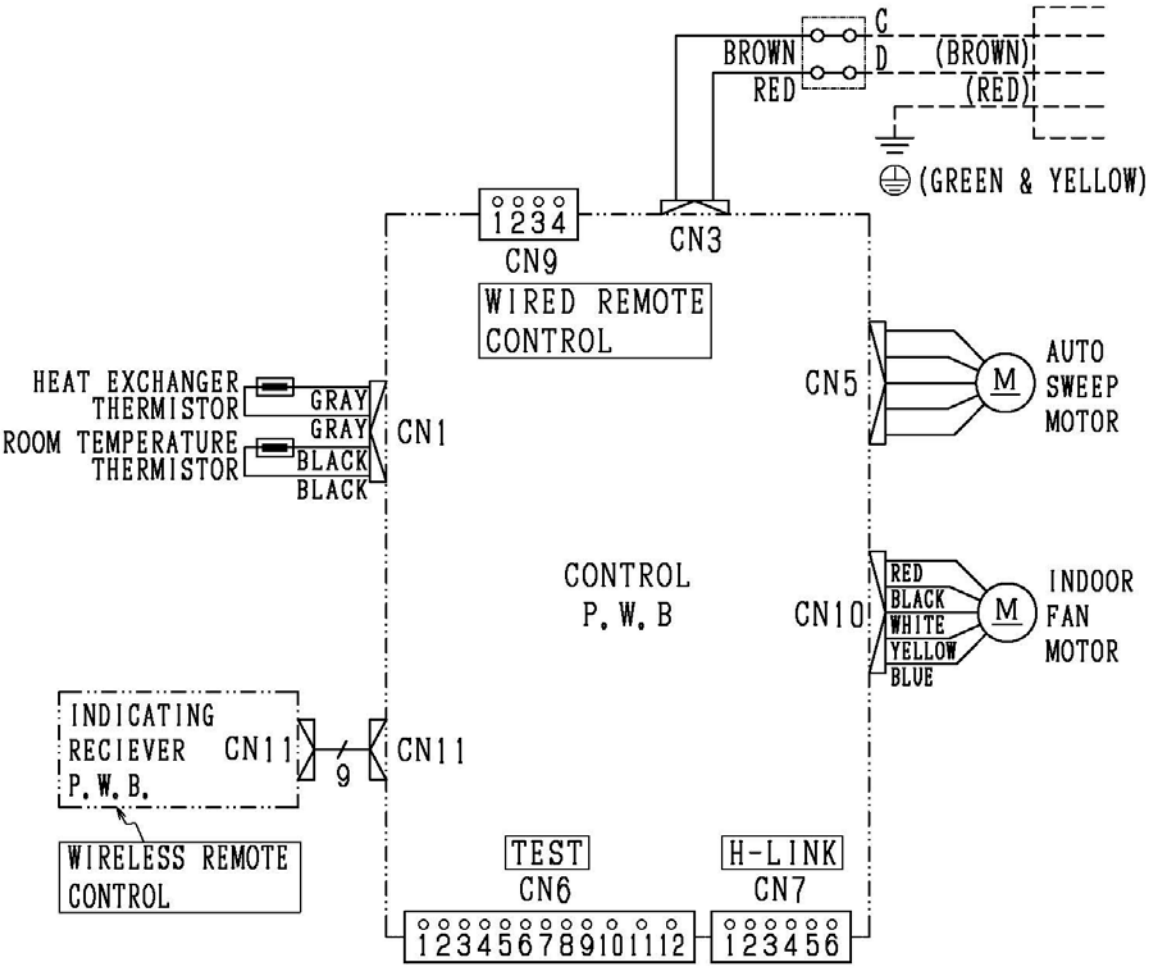

7.1.5. RAI-25RPA, RAI-35RPA, RAI-50RPA

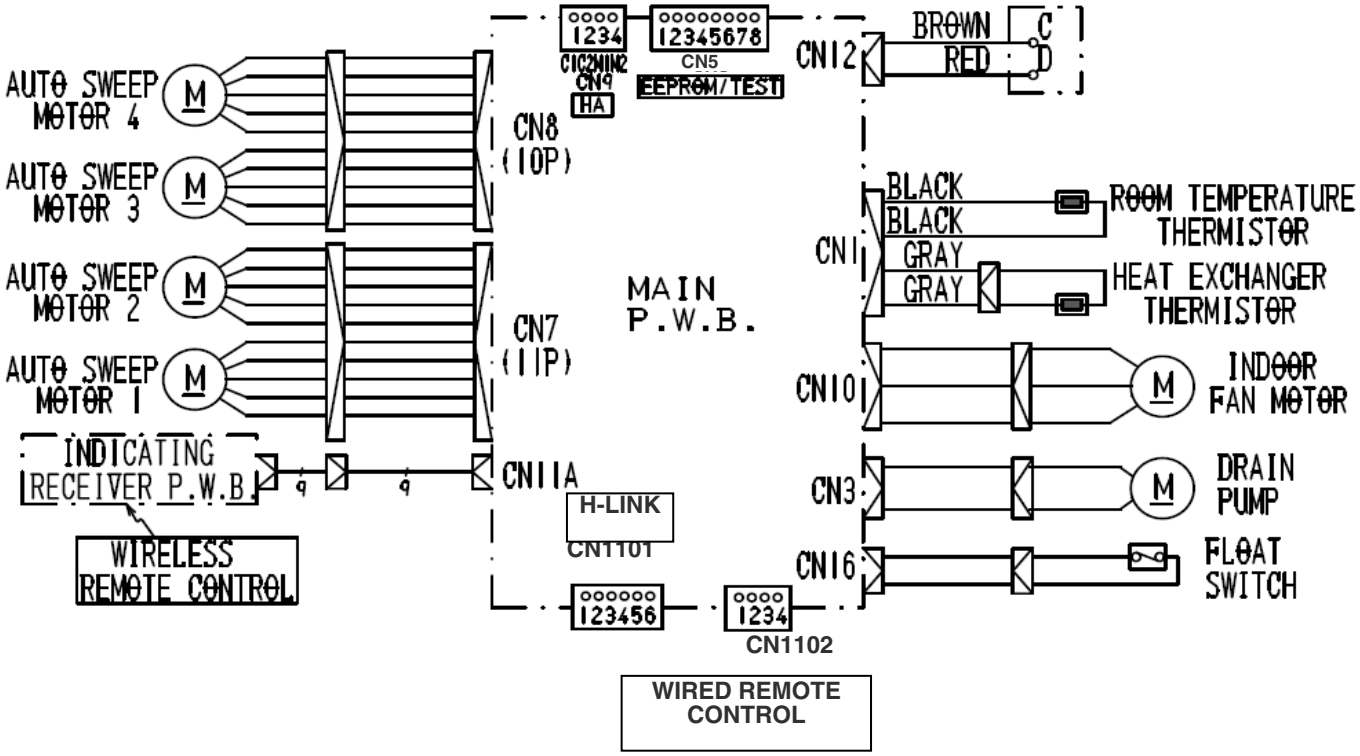

7.1.6. RAD-18RPA, RAD-25RPA, RAD-35RPA, RAD-50RPA

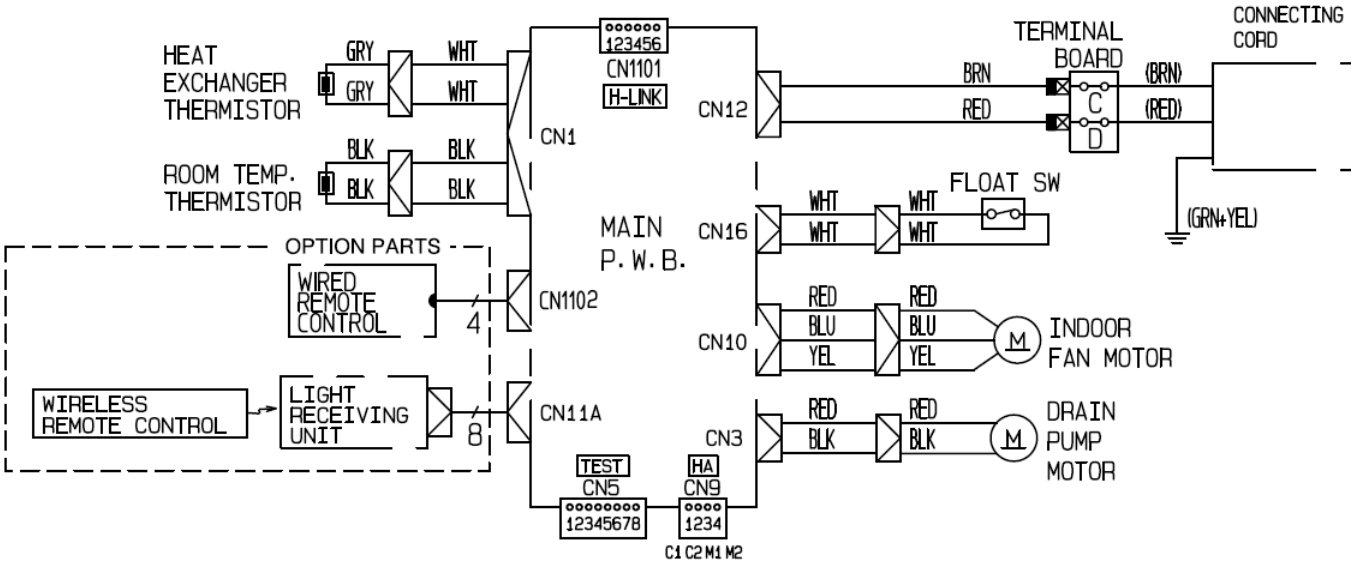

7.1.7. RAC-25NPA, RAC-35NPA, RAC-50NPA

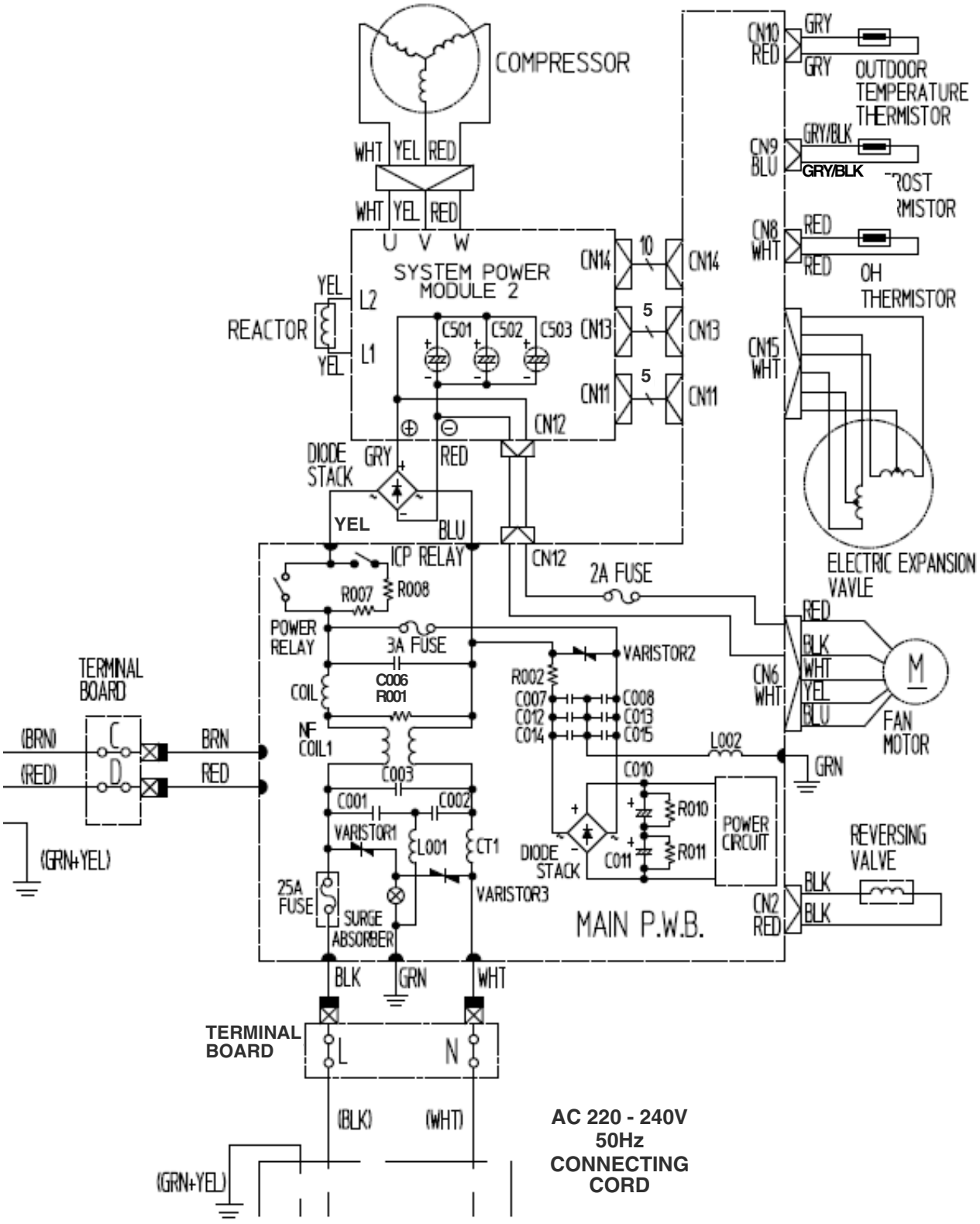

7.1.8. RAM-36NP2A

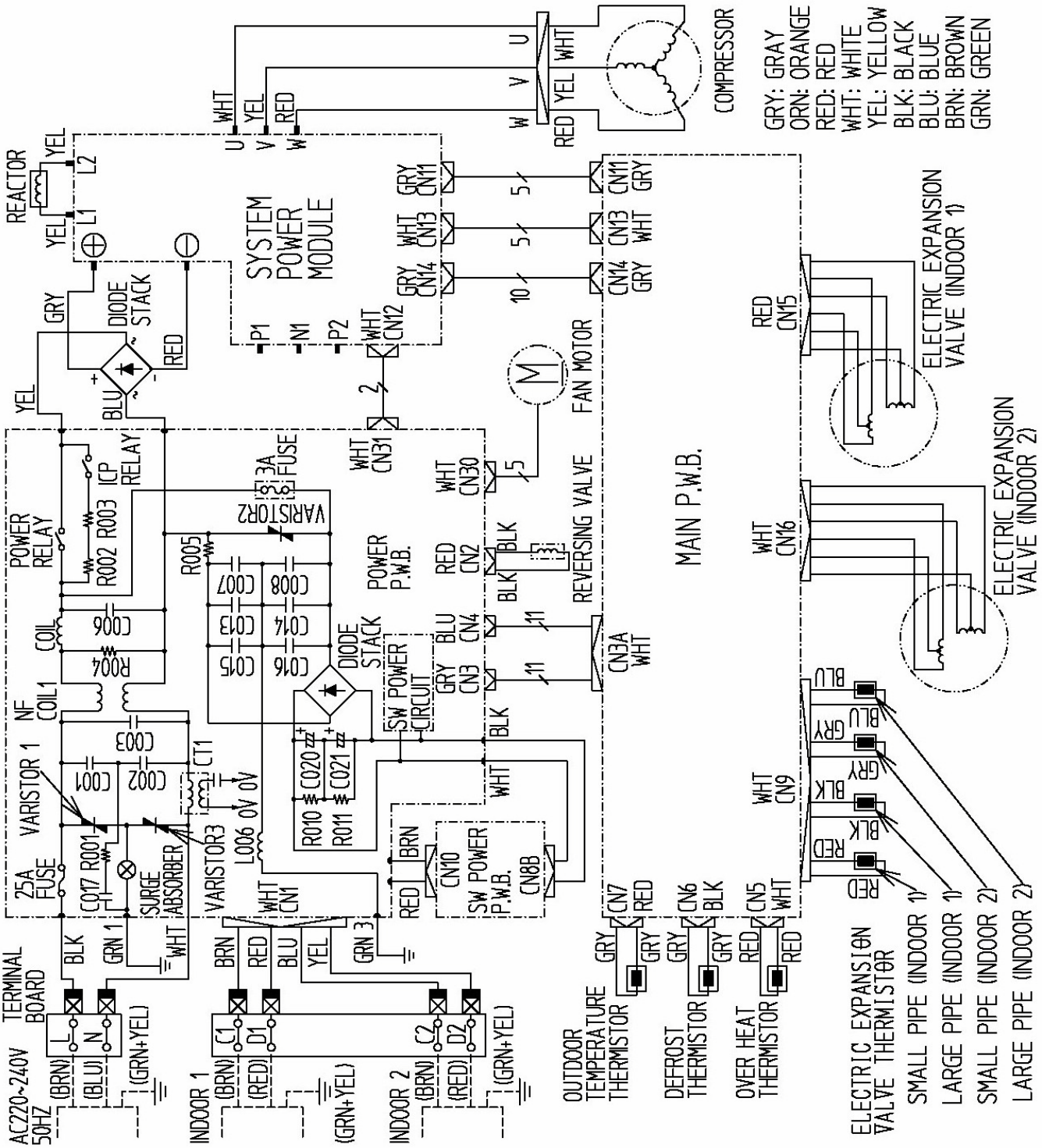

7.1.9. RAM-53NP2A

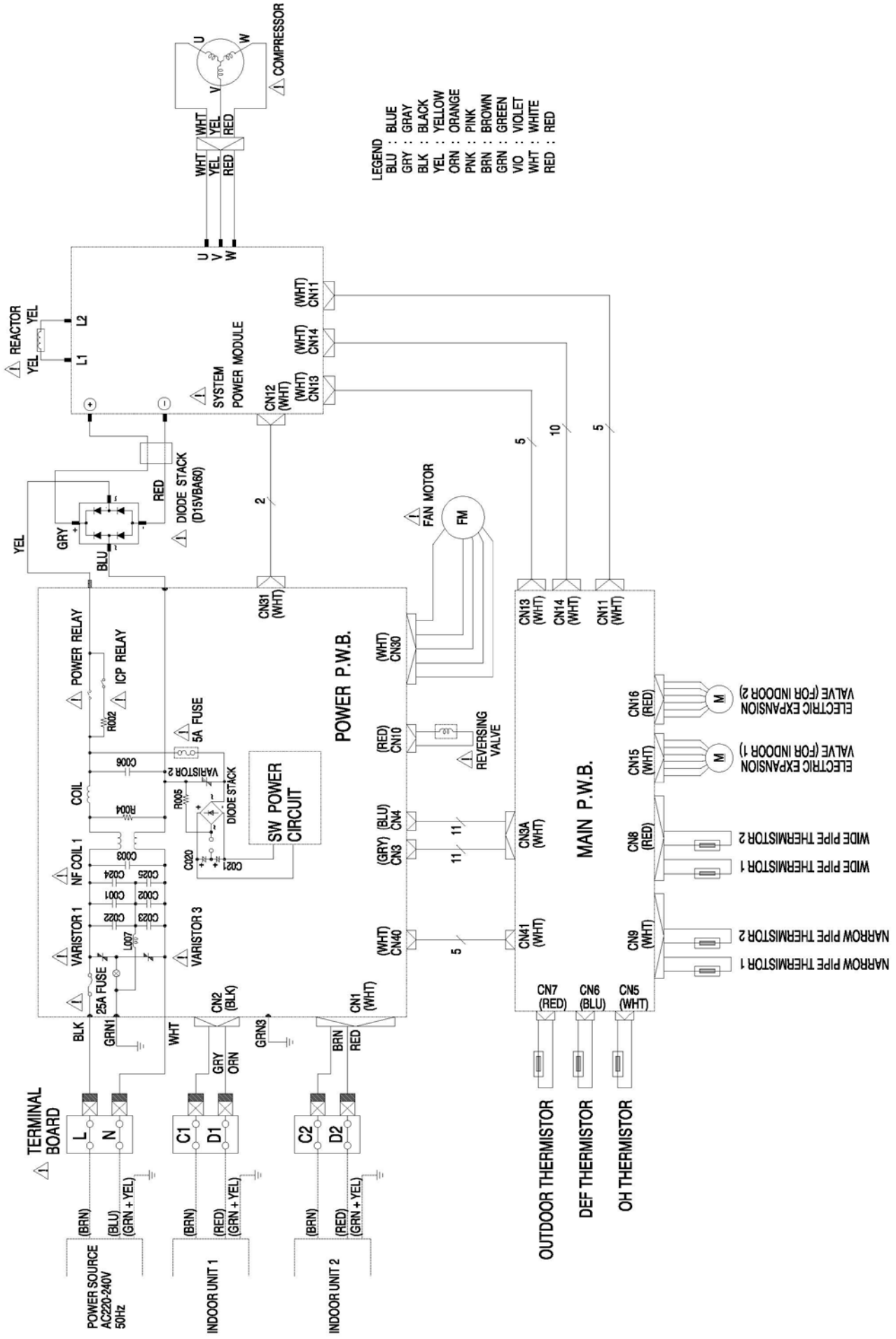

7.1.10. RAM-53NP3A

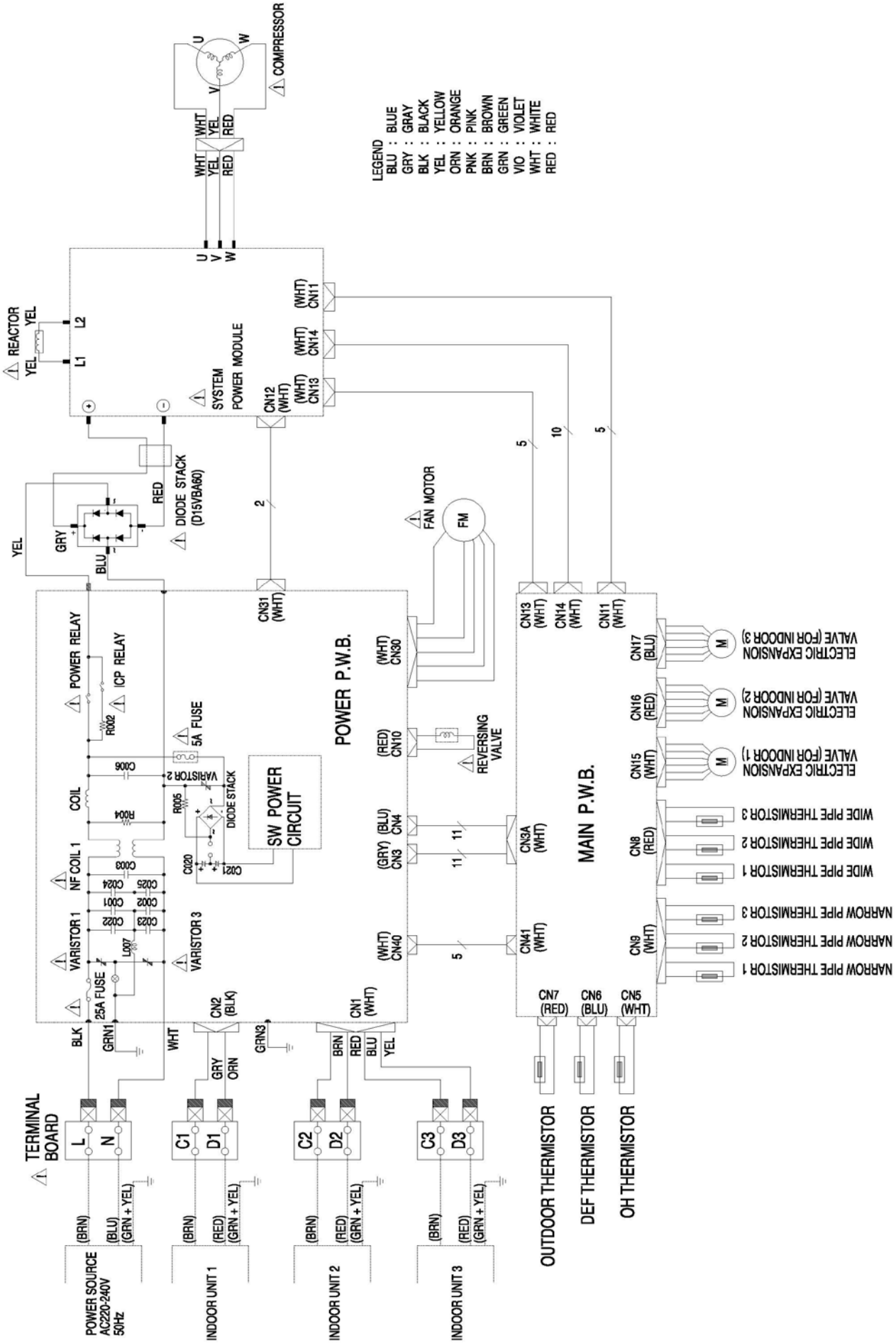

7.1.11. RAM-68NP3A

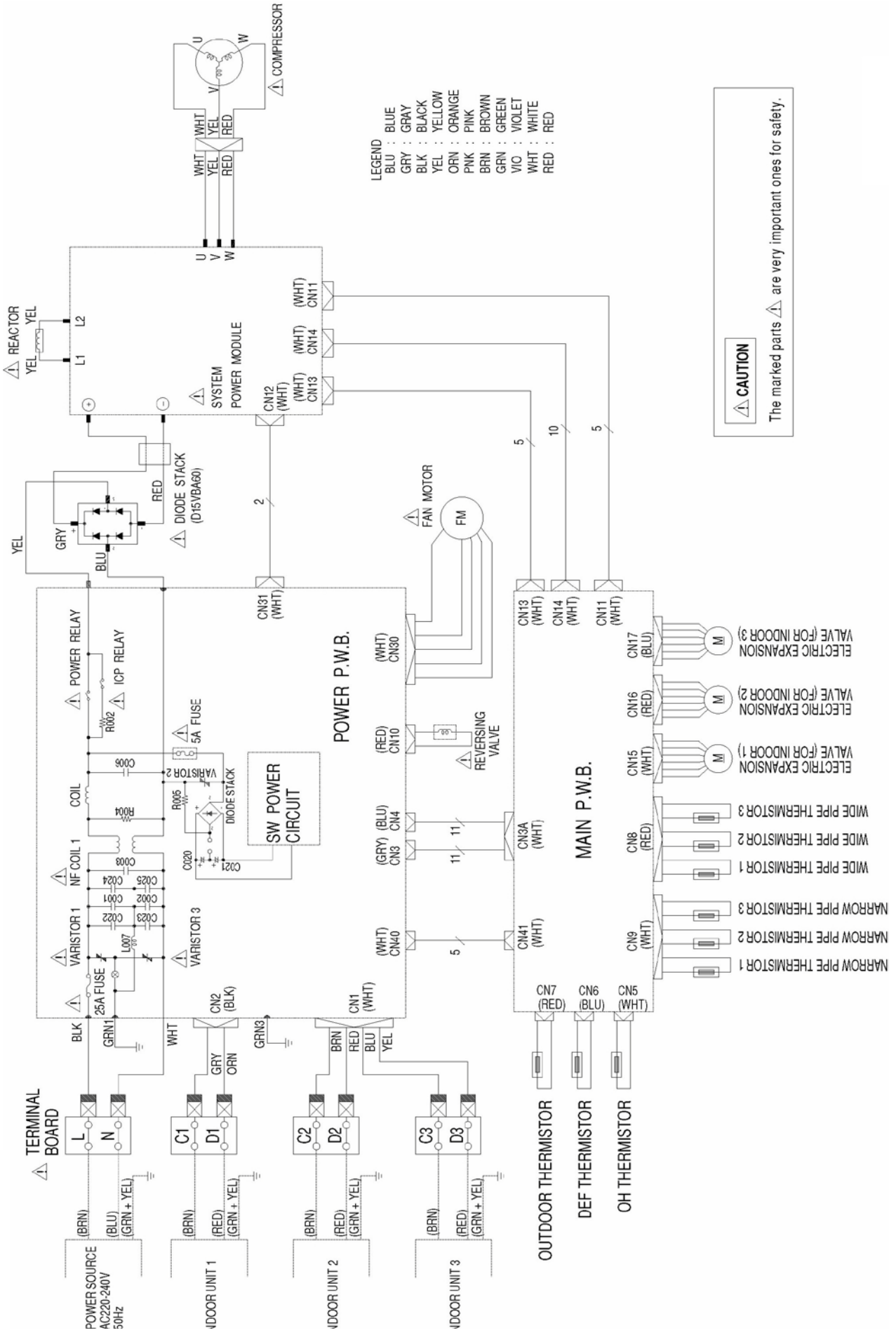

7.1.12. RAM-70NP4A

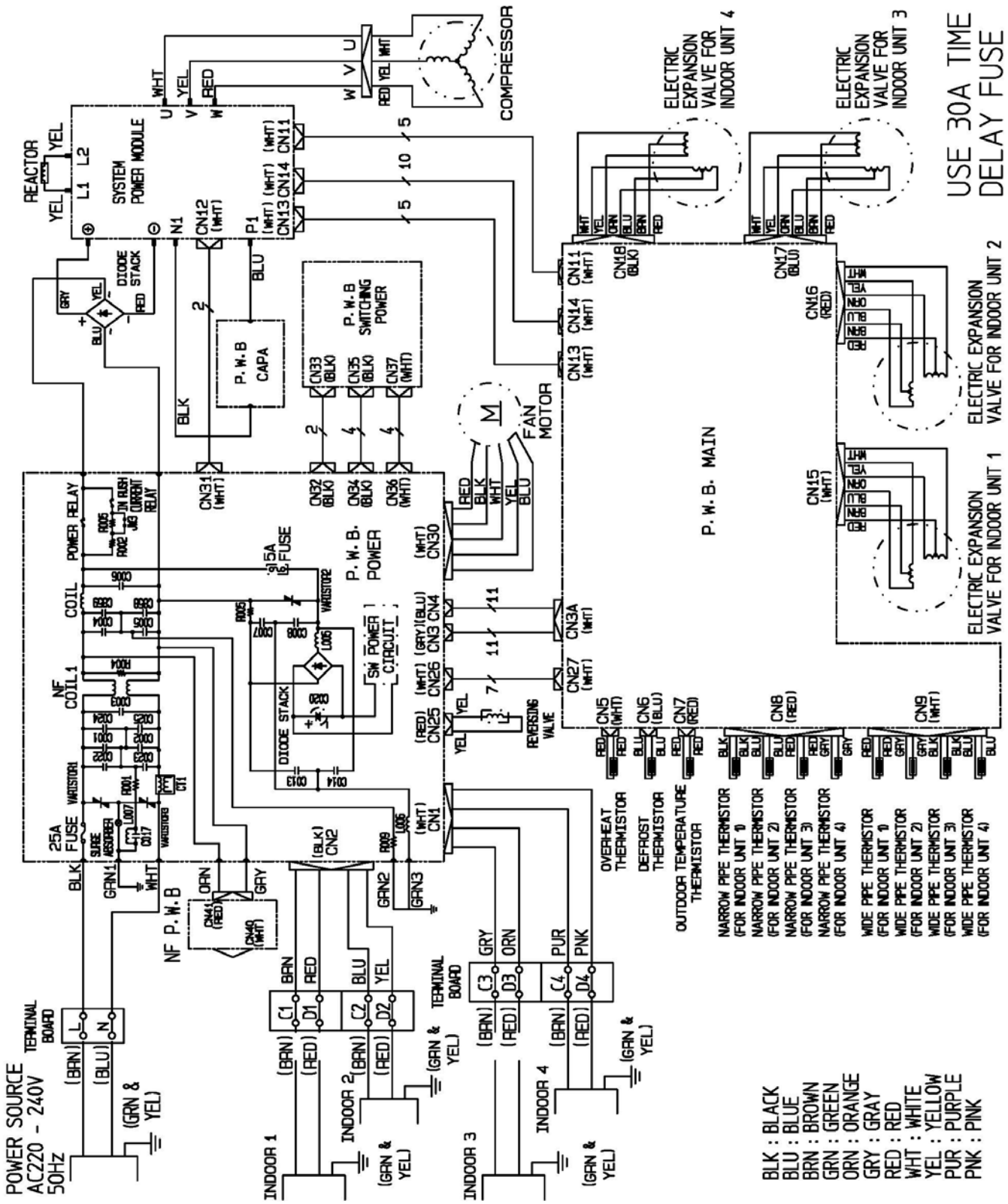

7.1.13. RAM-90NP5A

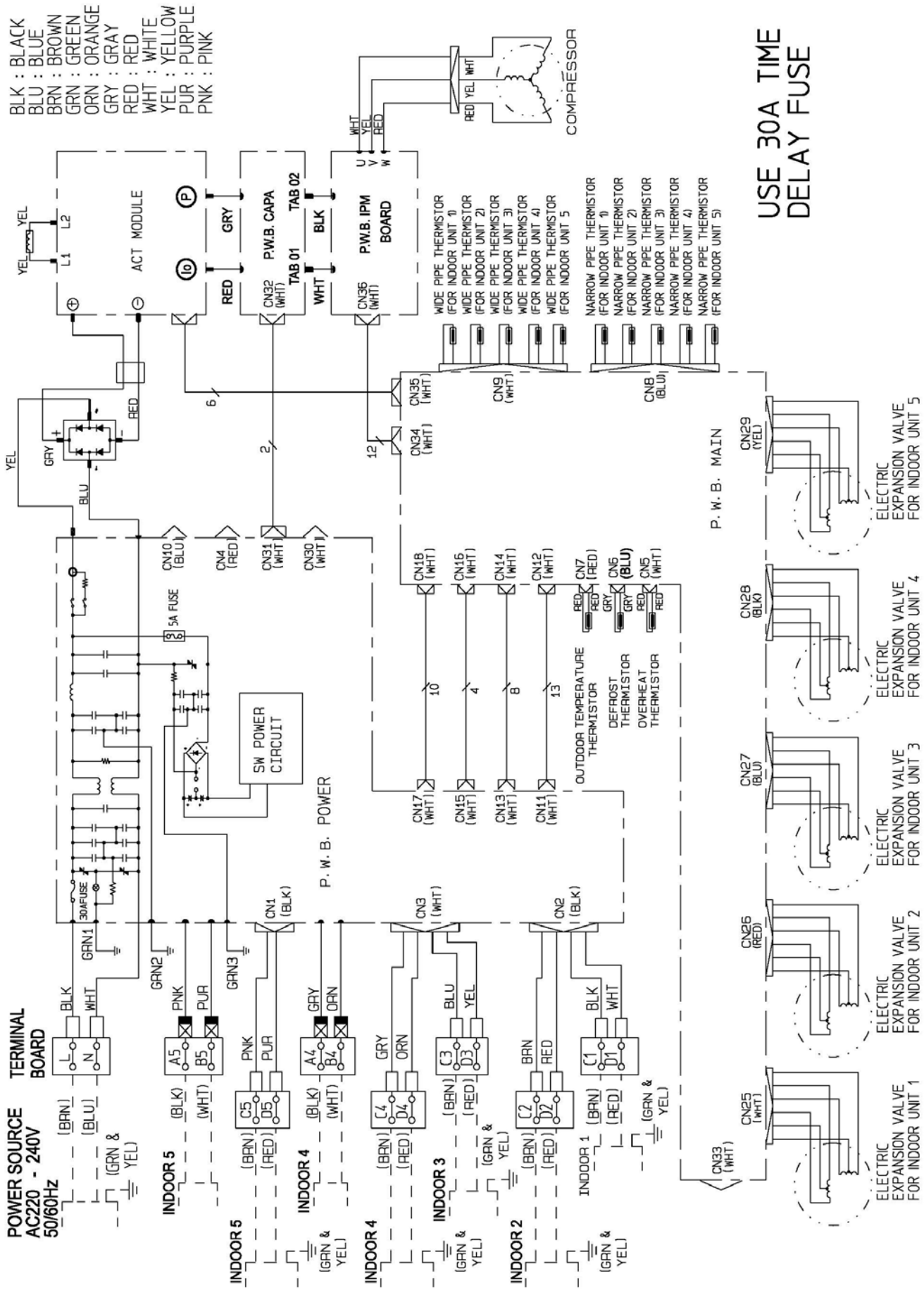

7.1.14. RAM-130NP6A (OUTDOOR 1)

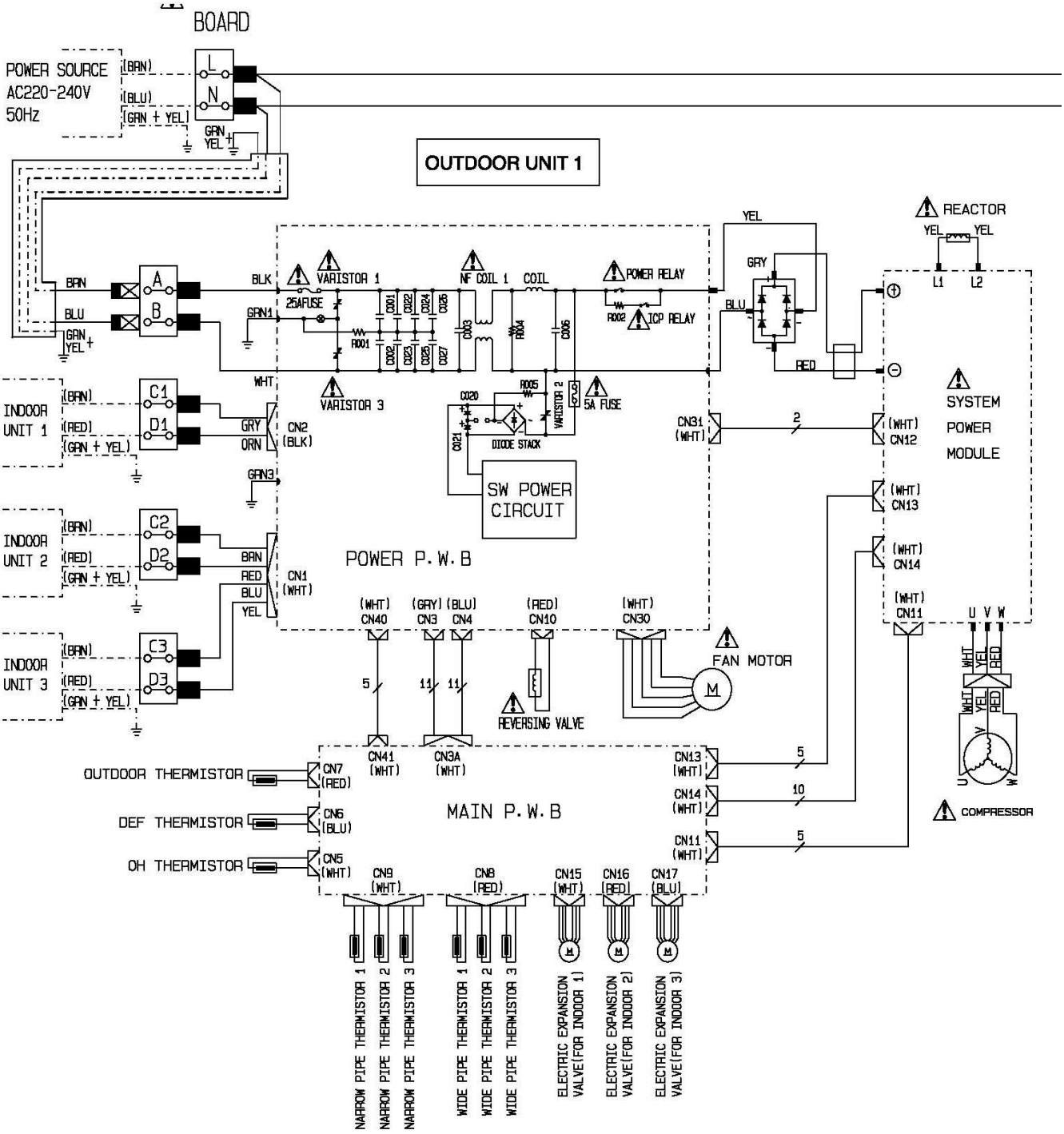

7.1.15. RAM-130NP6A (OUTDOOR 2)

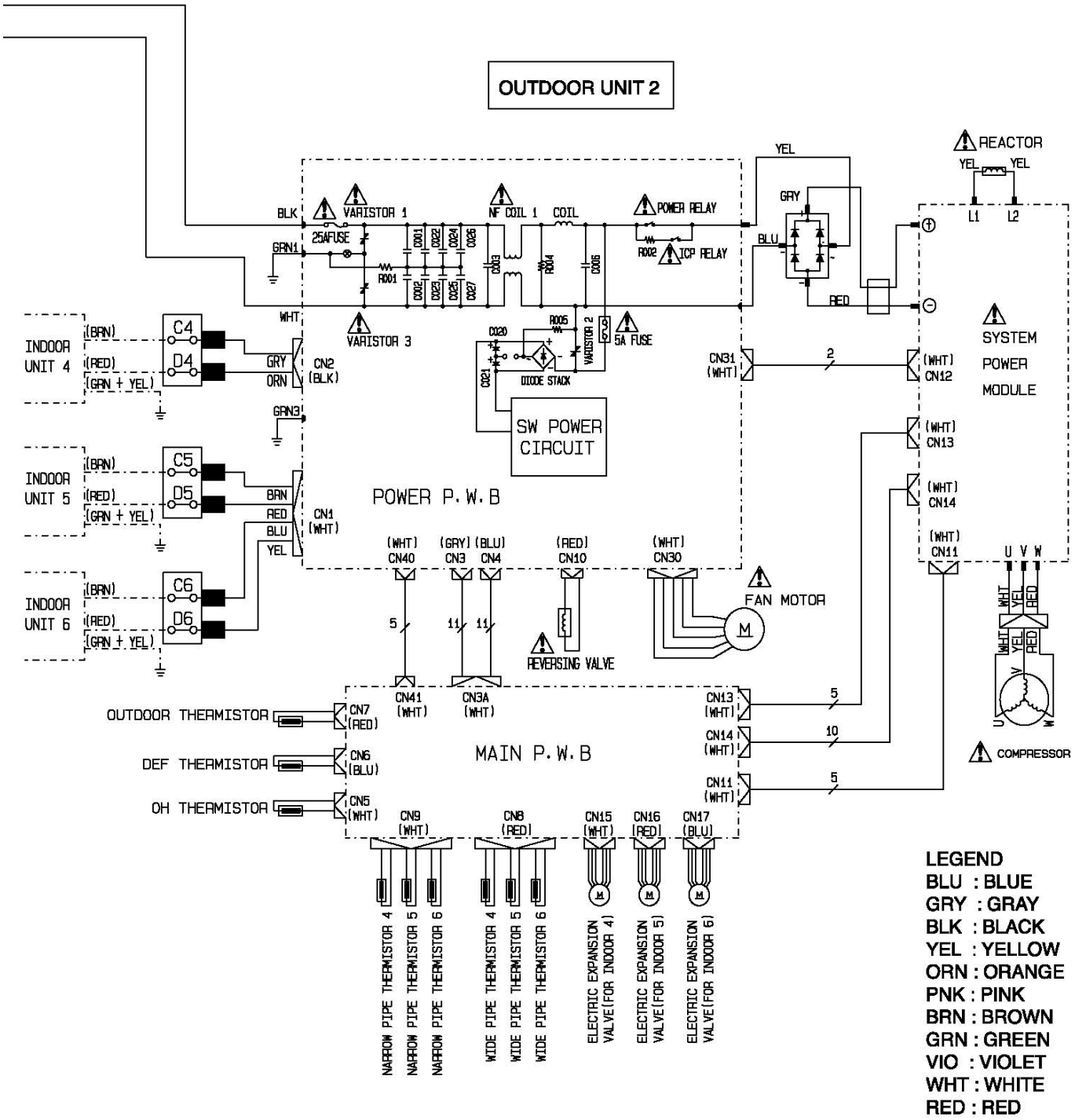

7.2. MONO - SPLIT

7.2.1. RAK-18PSA, RAK-25PSA, RAK-35PSA

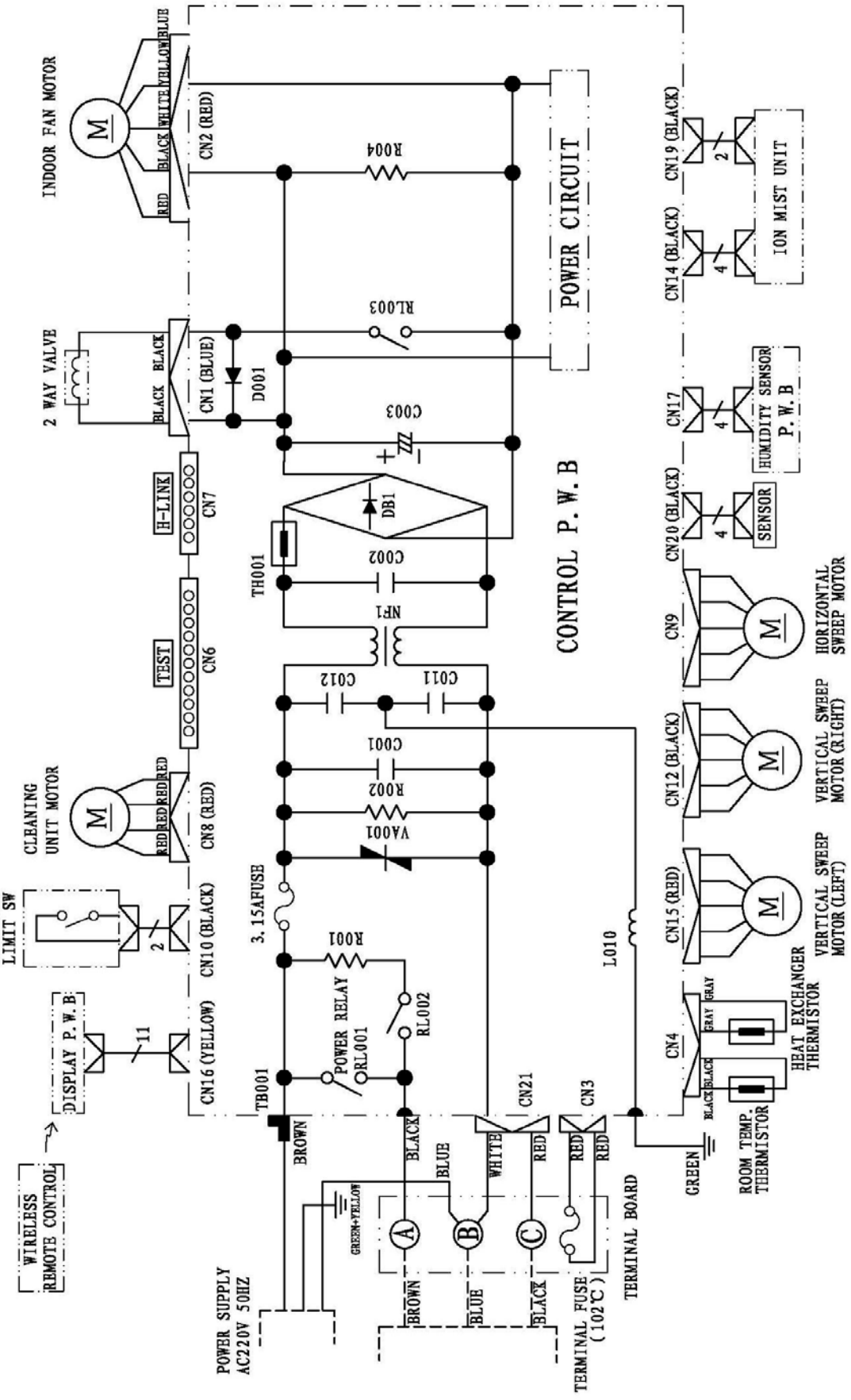

7.2.2. RAK-18PSAN, RAK-25PSAN, RAK-35PSAN

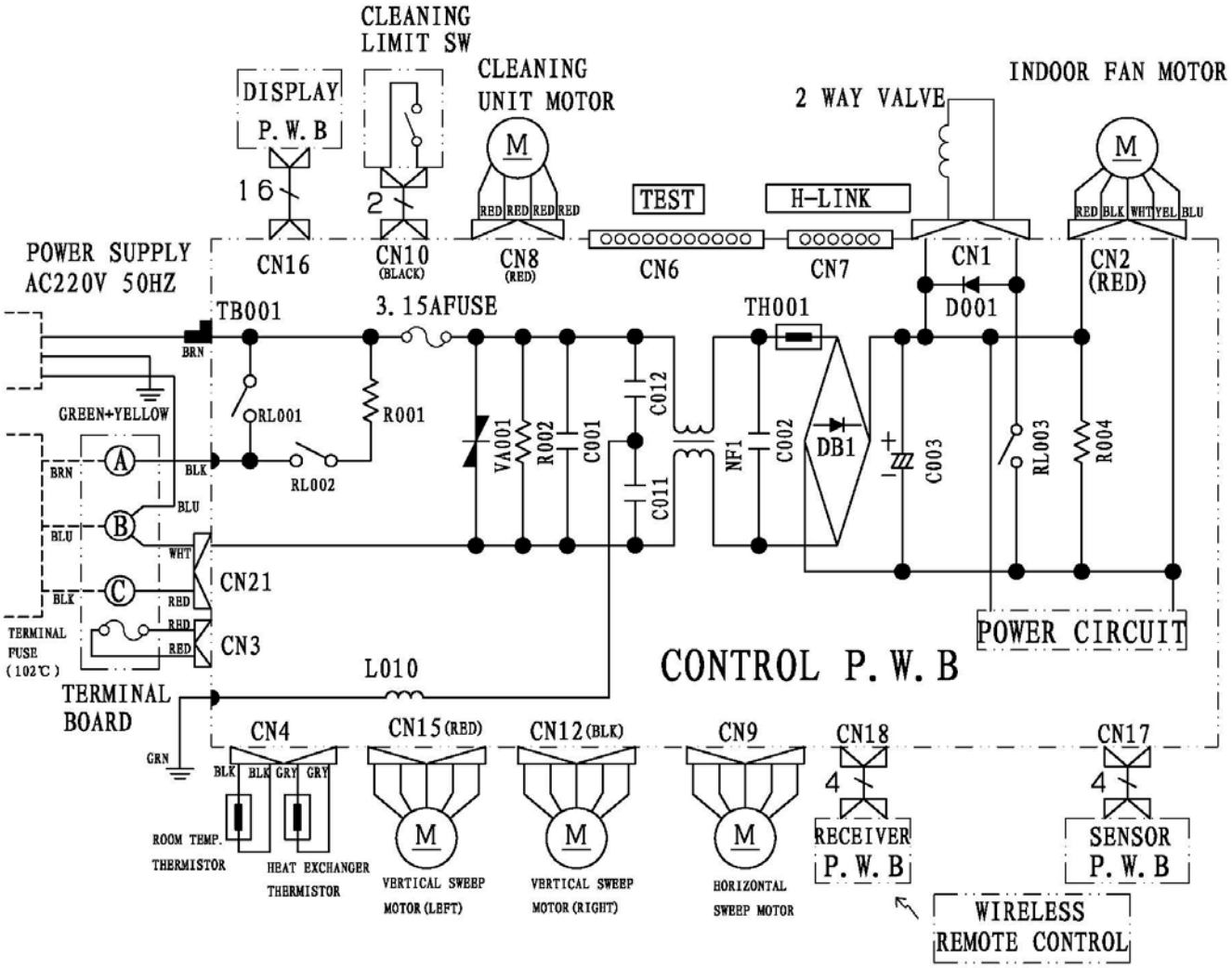

7.2.3. RAC-18WSA, RAC-25WSA, RAC-35WSA, RAC-18WSAN, RAC-25WSAN, RAC-35WSAN

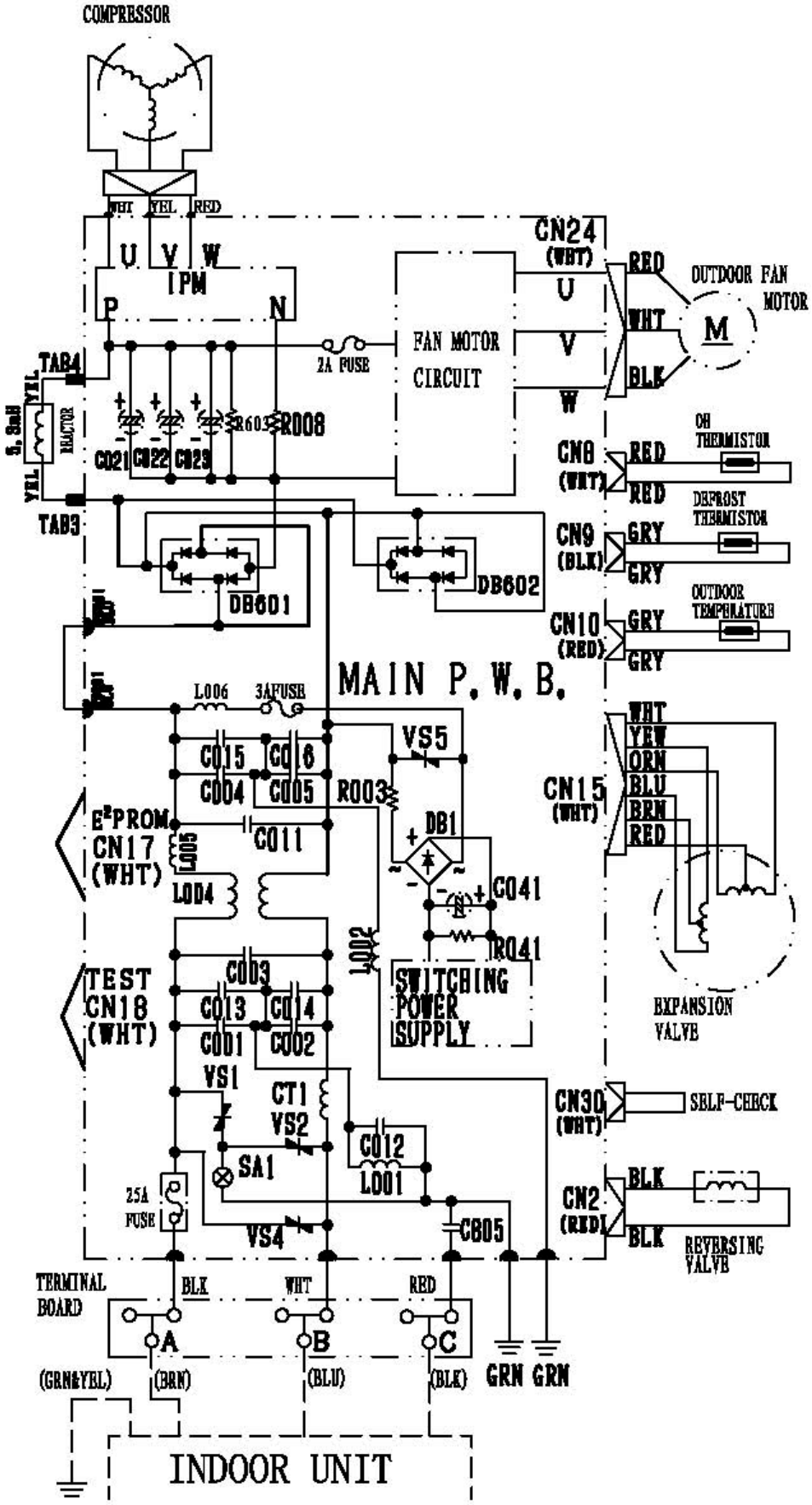

7.2.4. RAK-18PSPA, RAK-25PSPA, RAK-35PSPA

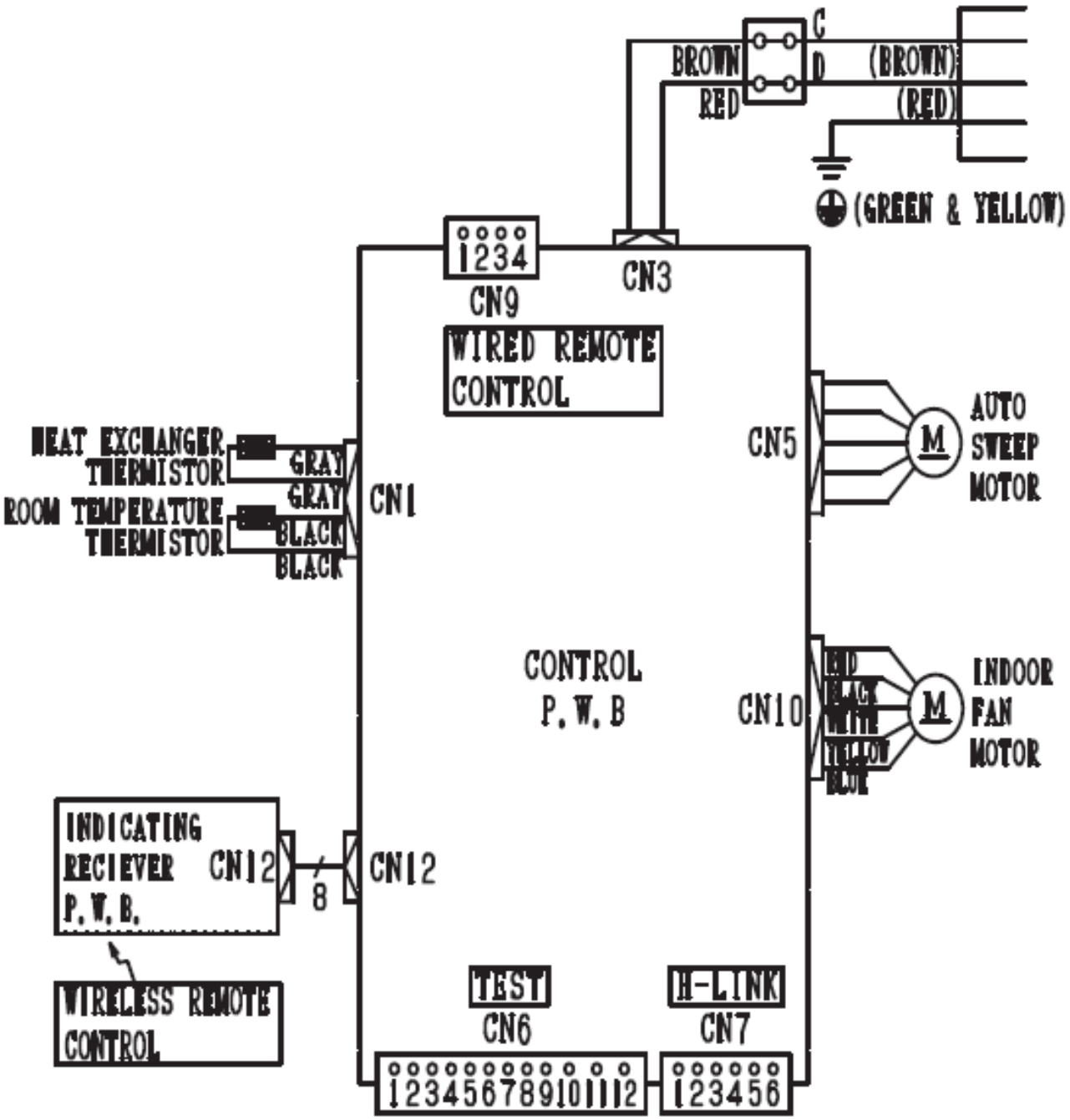

7.2.5. RAC-18WSPA, RAC-25WSPA, RAC-35WSPA

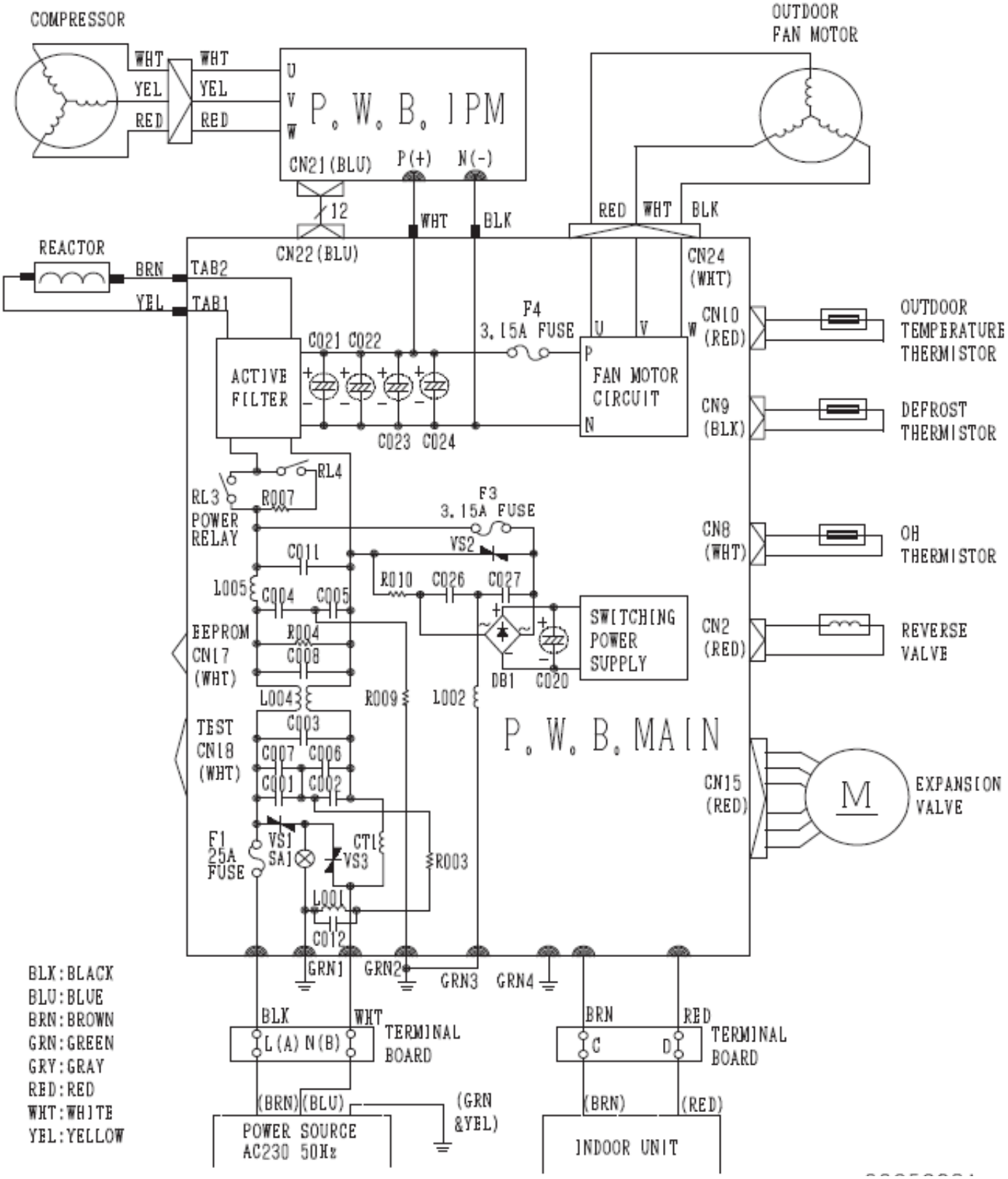

7.2.6. RAK-25PXA, RAK-35PXA, RAK-50PXA

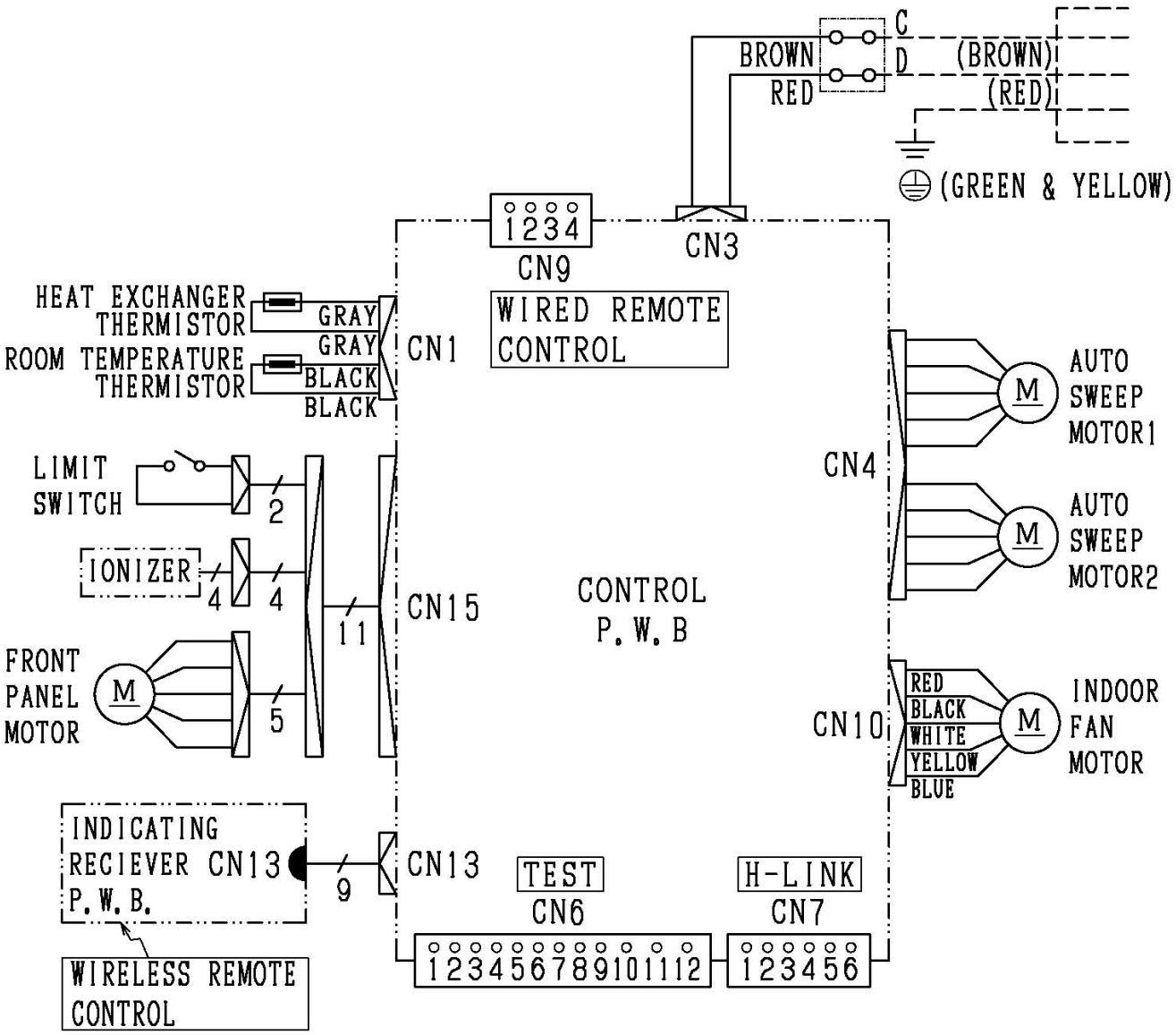

7.2.7. RAC-25WXA, RAC-35WXA

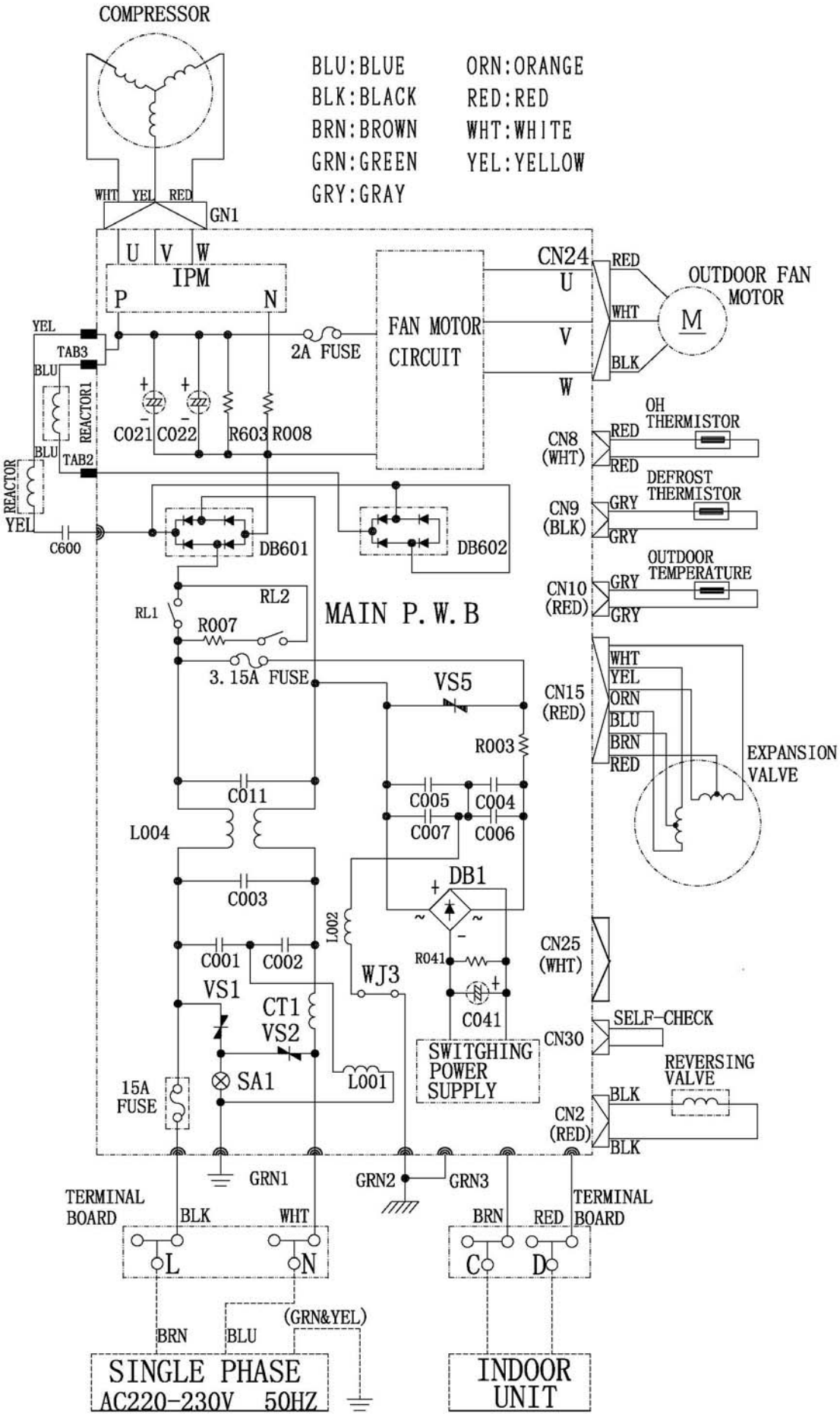

7.2.8. RAC-50WXA

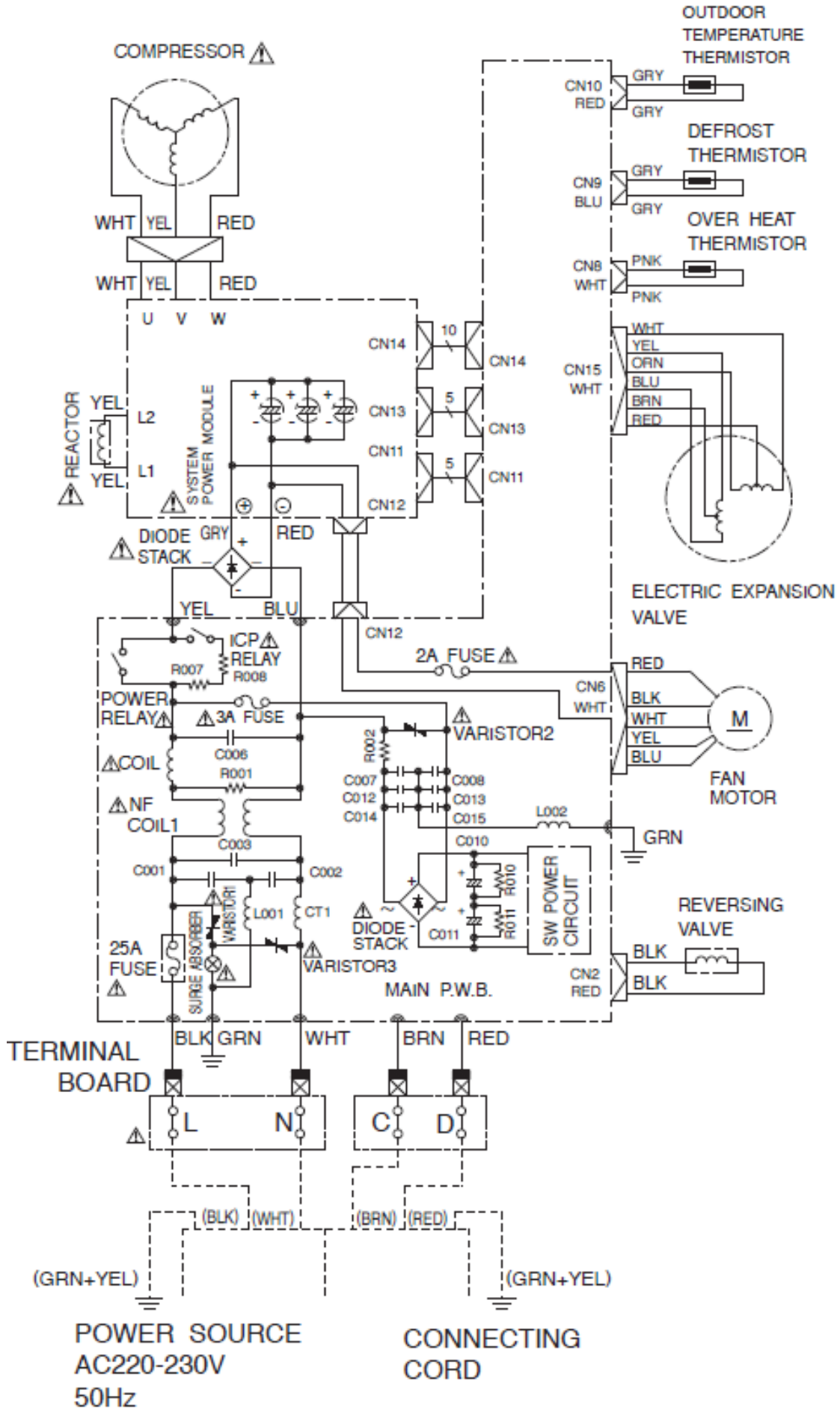

7.2.9. RAK-18PPA, RAK-25PPA, RAK-35PPA

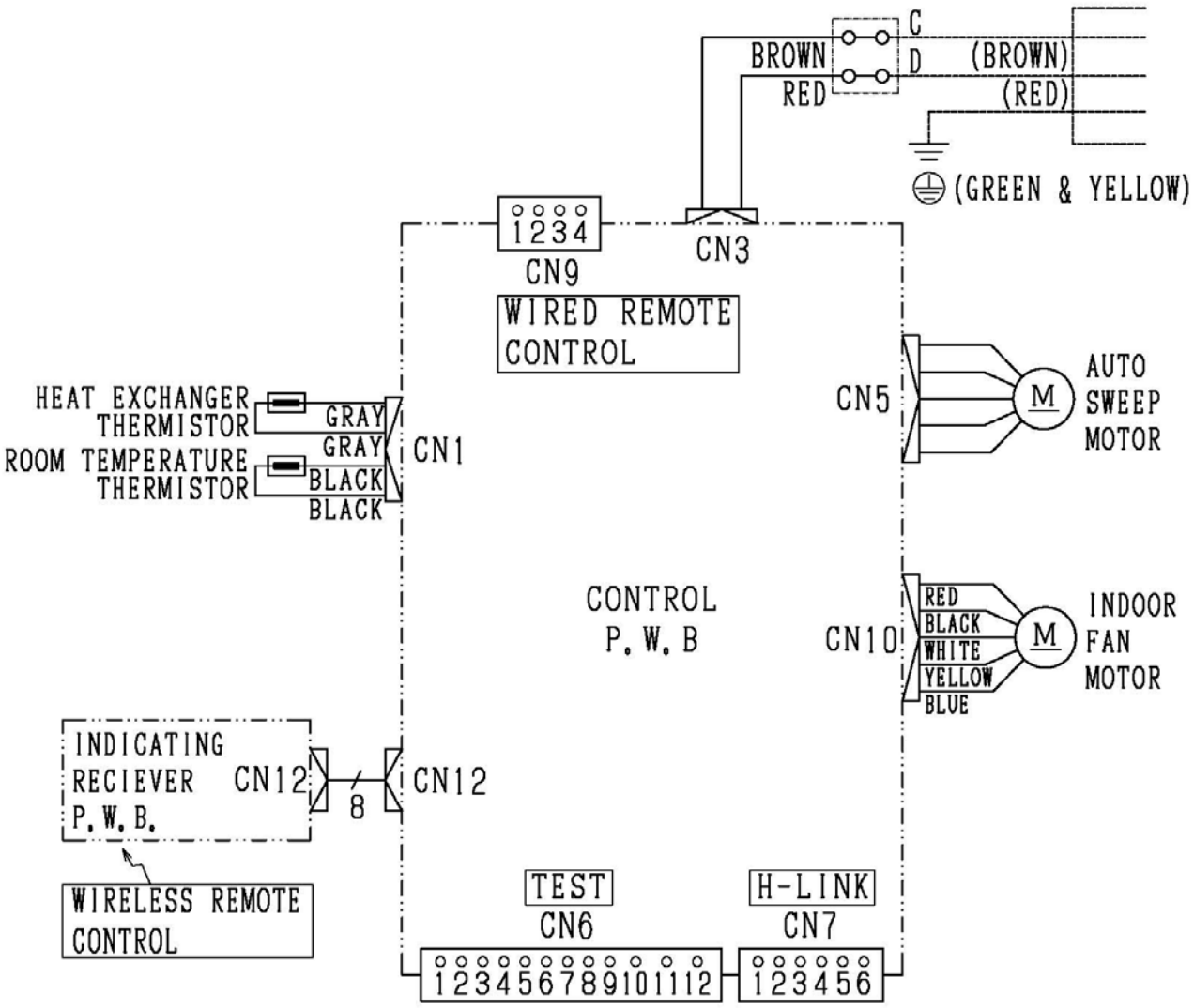

7.2.10. RAC-18WPA, RAC-25WPA

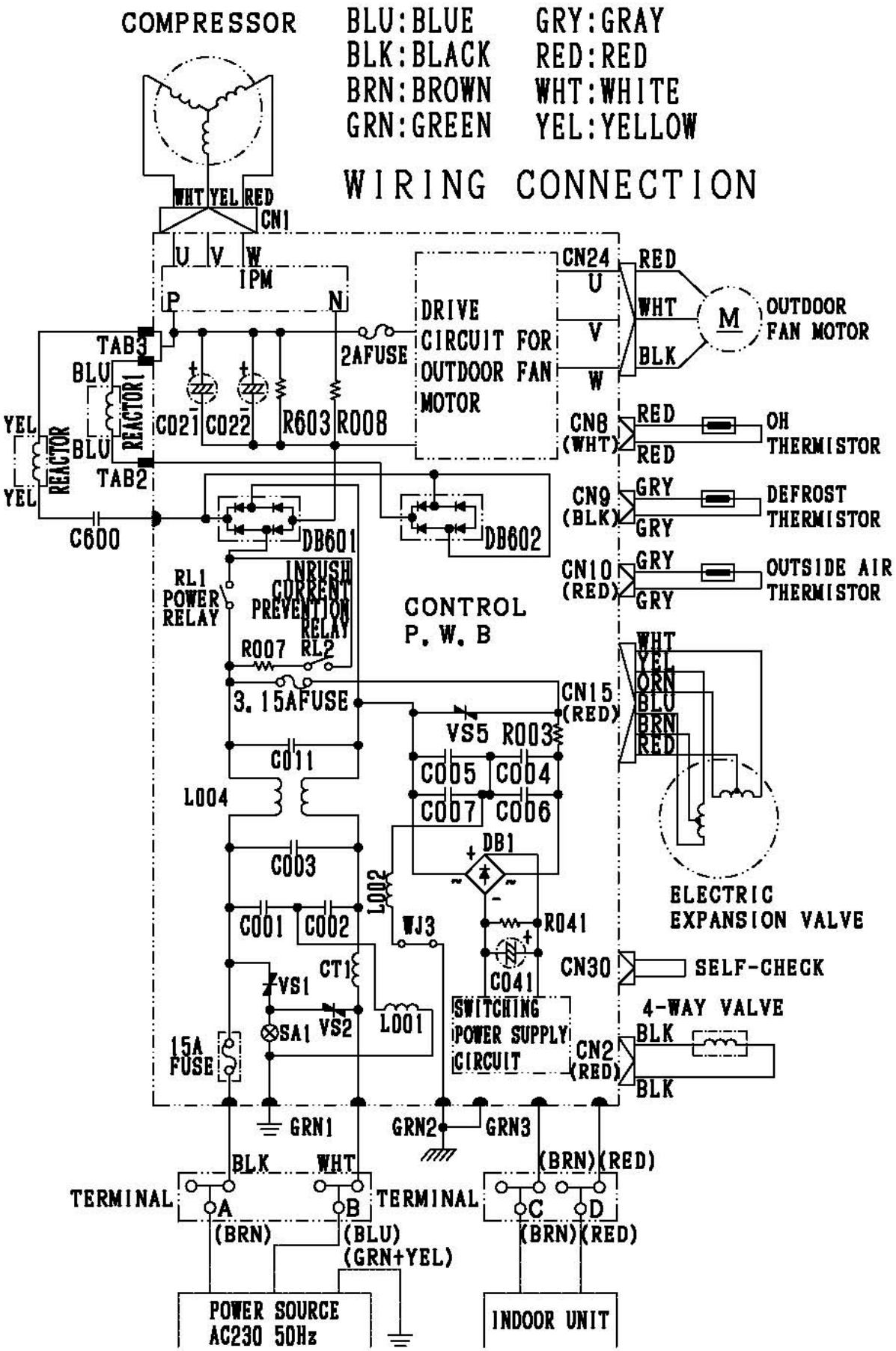

7.2.11. RAC-35WPA

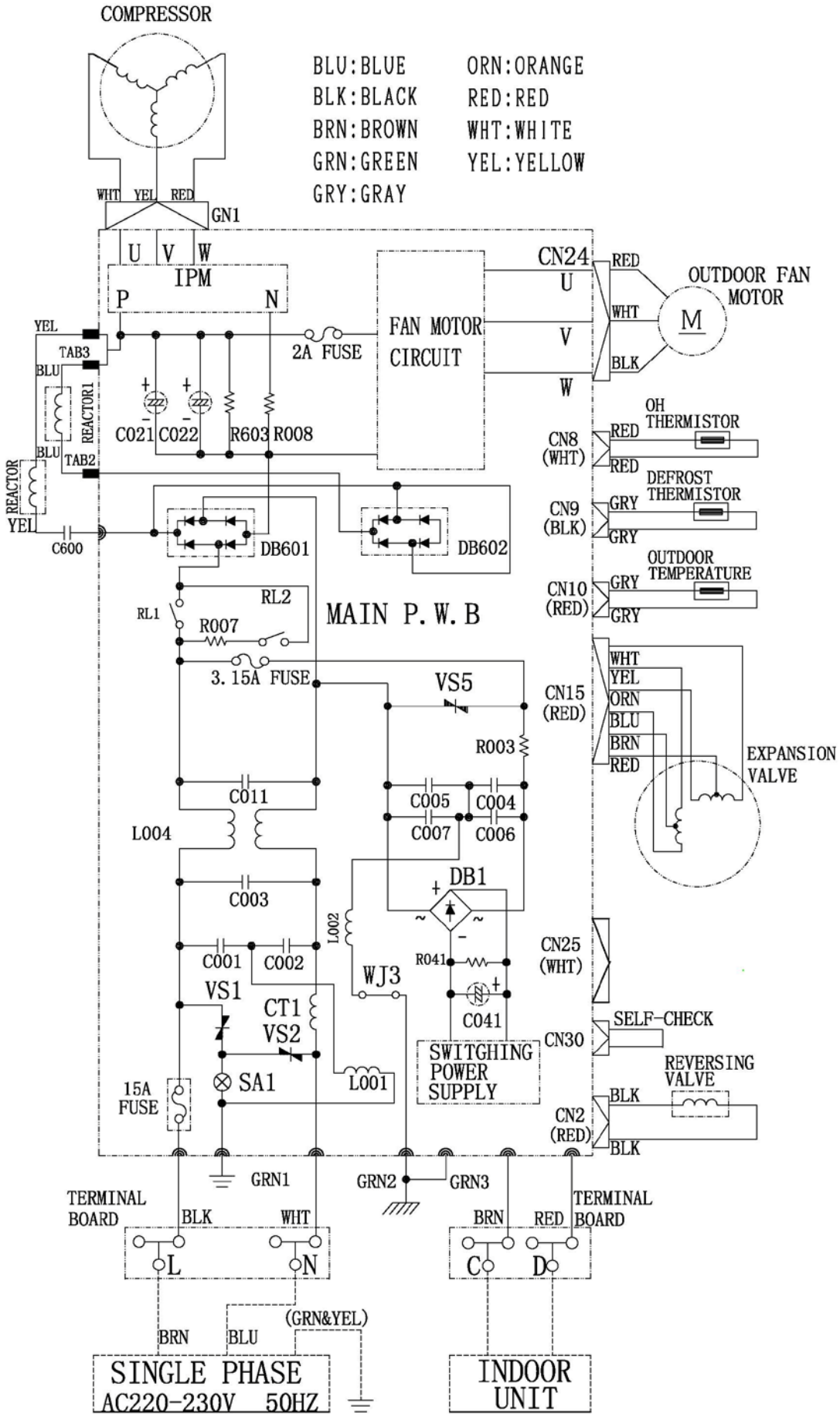

7.2.12. RAK-50PPA

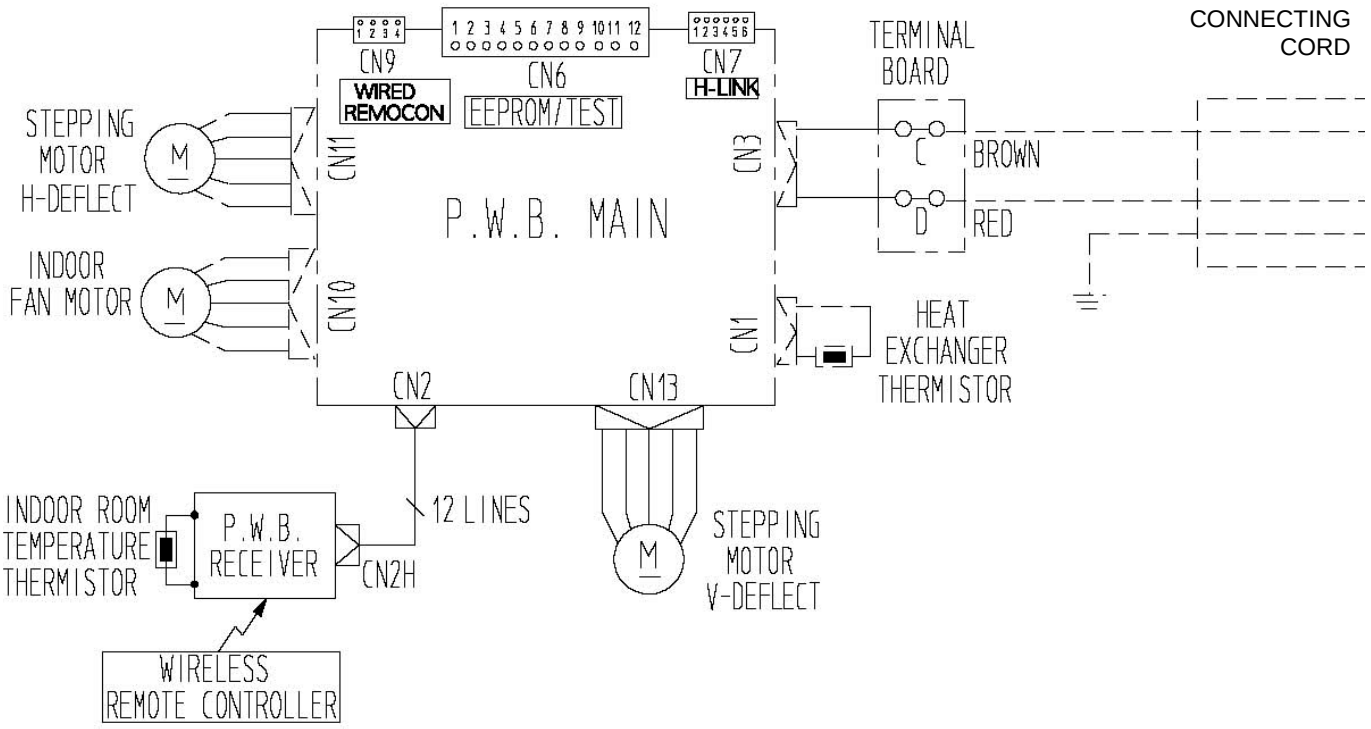

7.2.13. RAC-50WPA

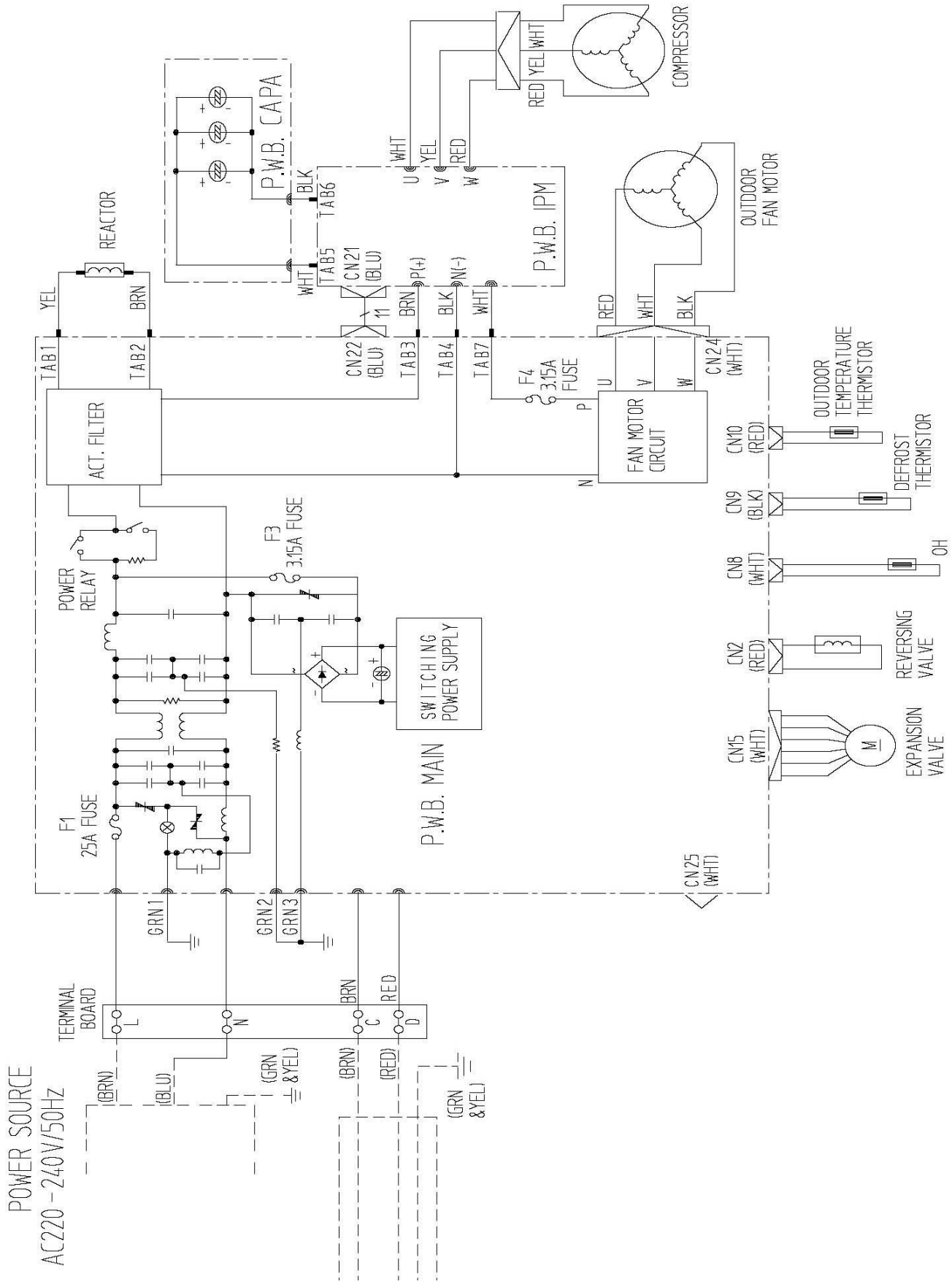

7.2.14. RAK-60PPA

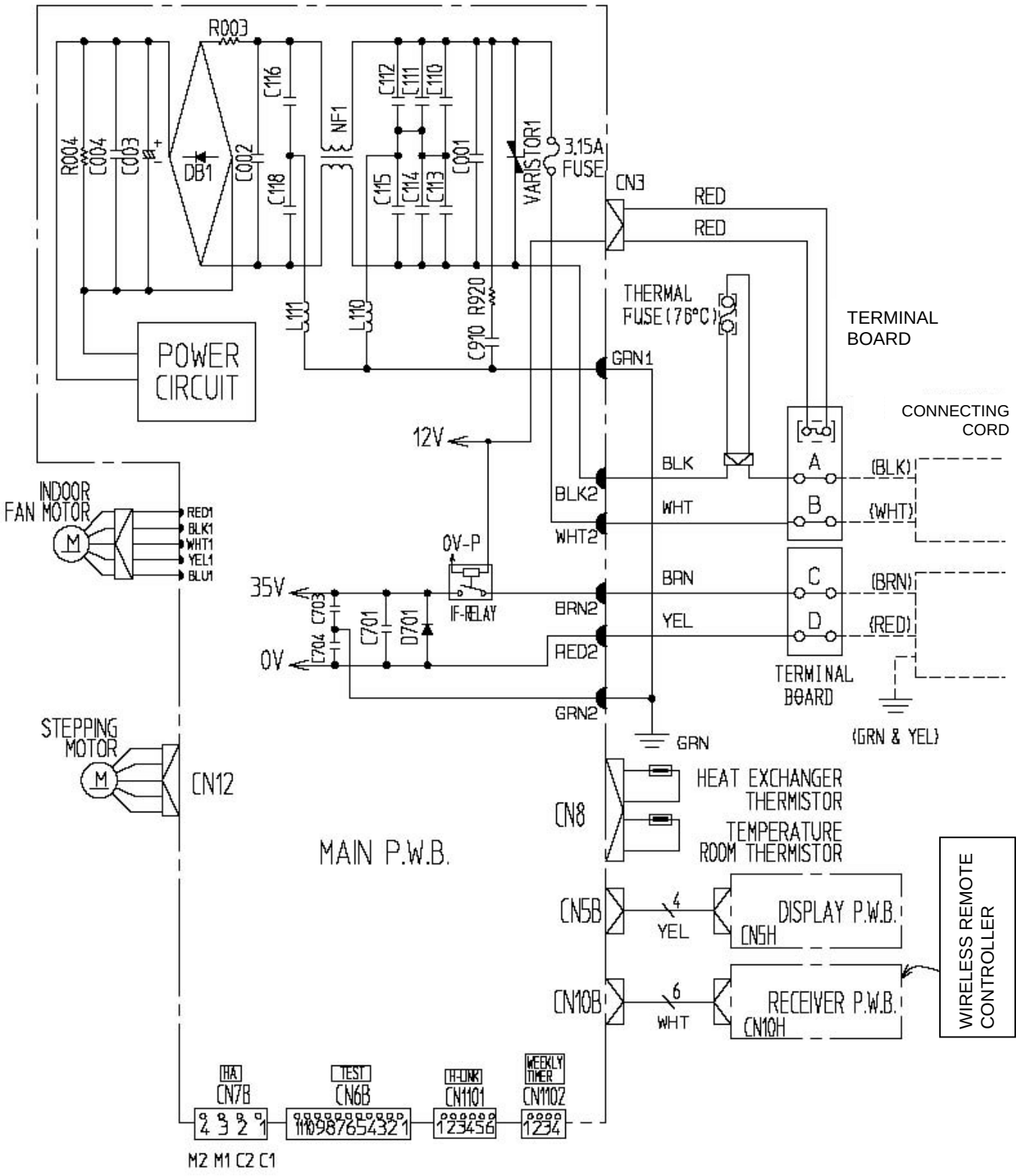

7.2.15. RAC-60WPA

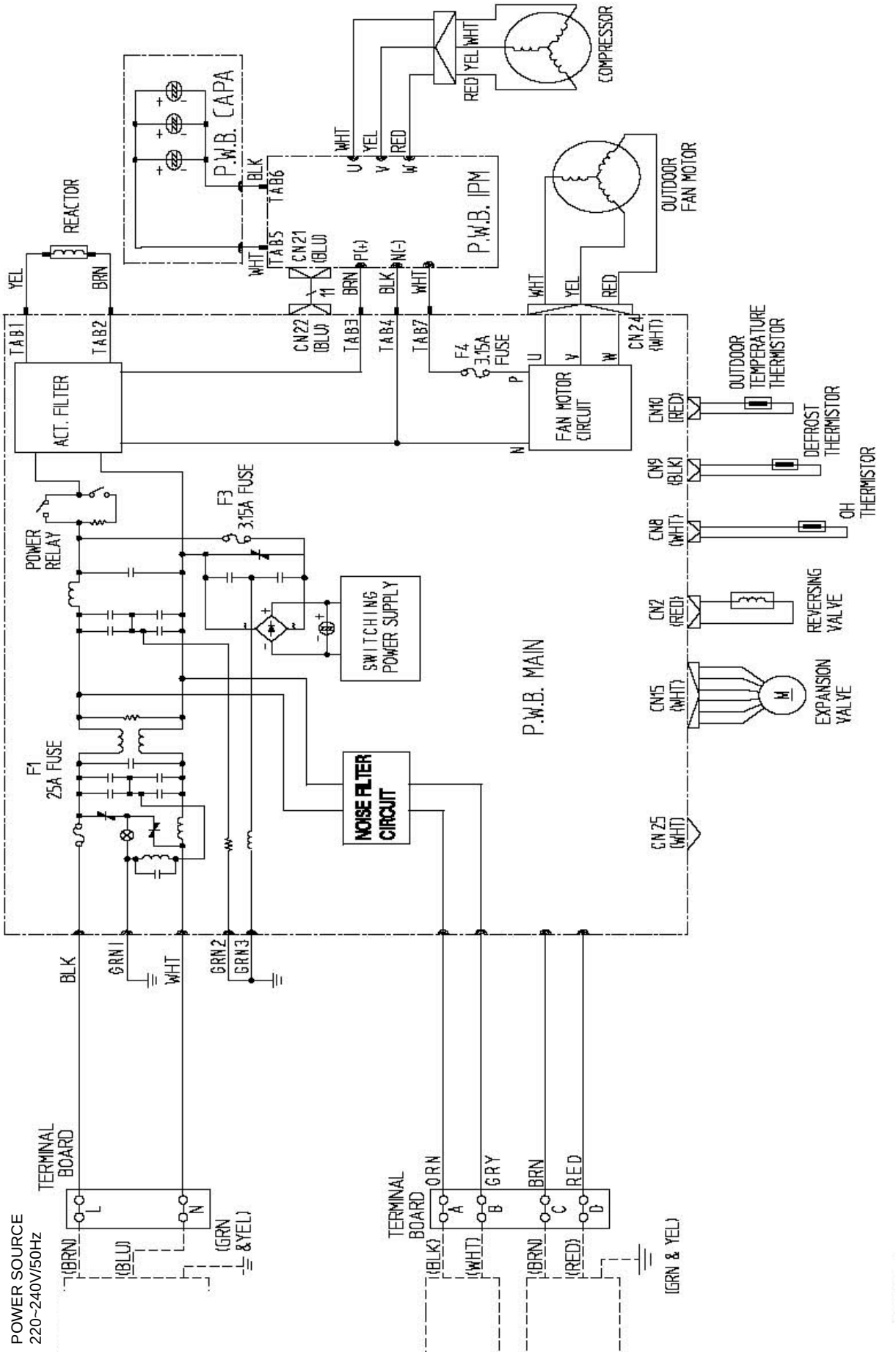

7.2.16. RAK-70PPA

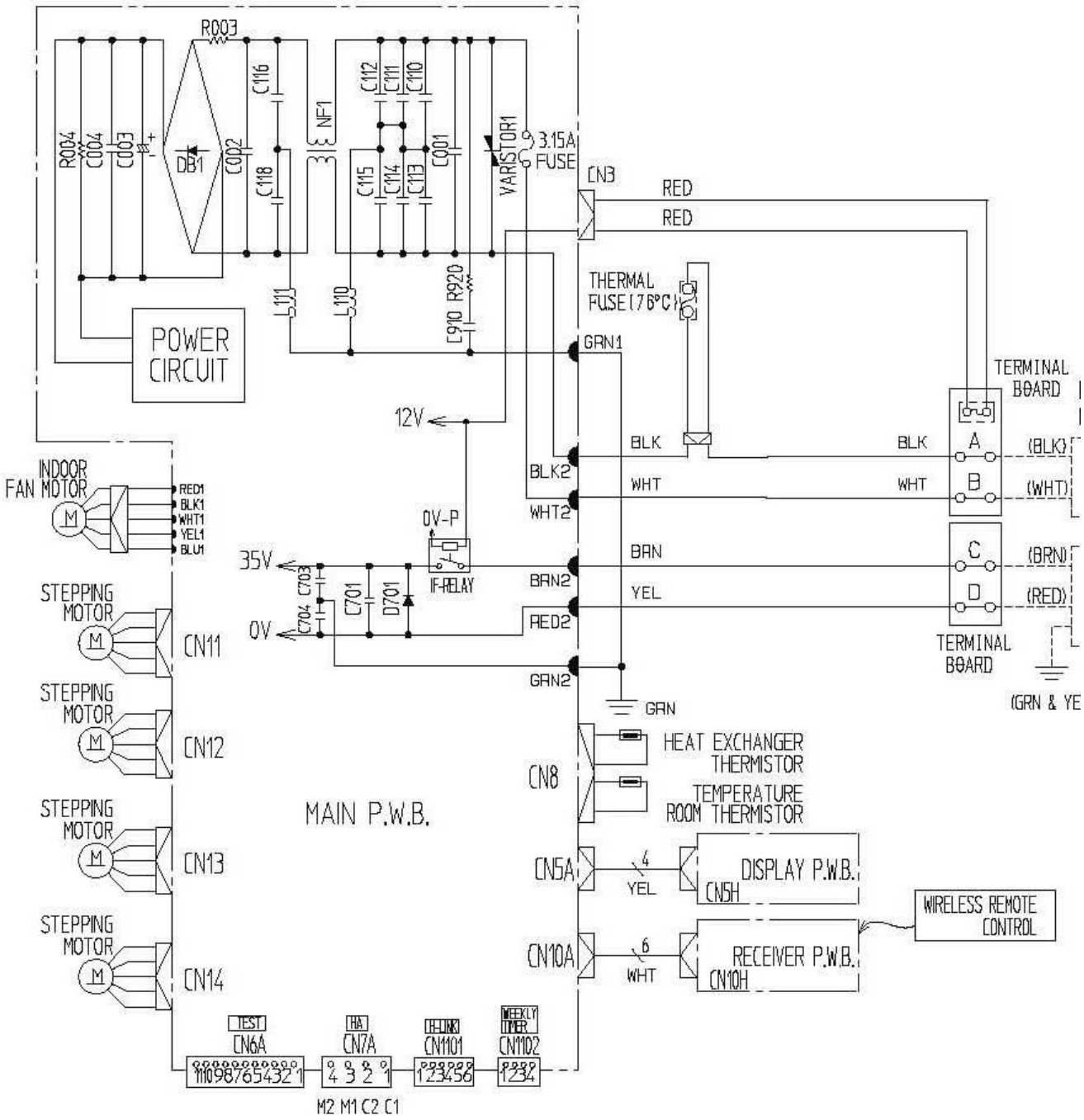

7.2.17. RAC-70WPA

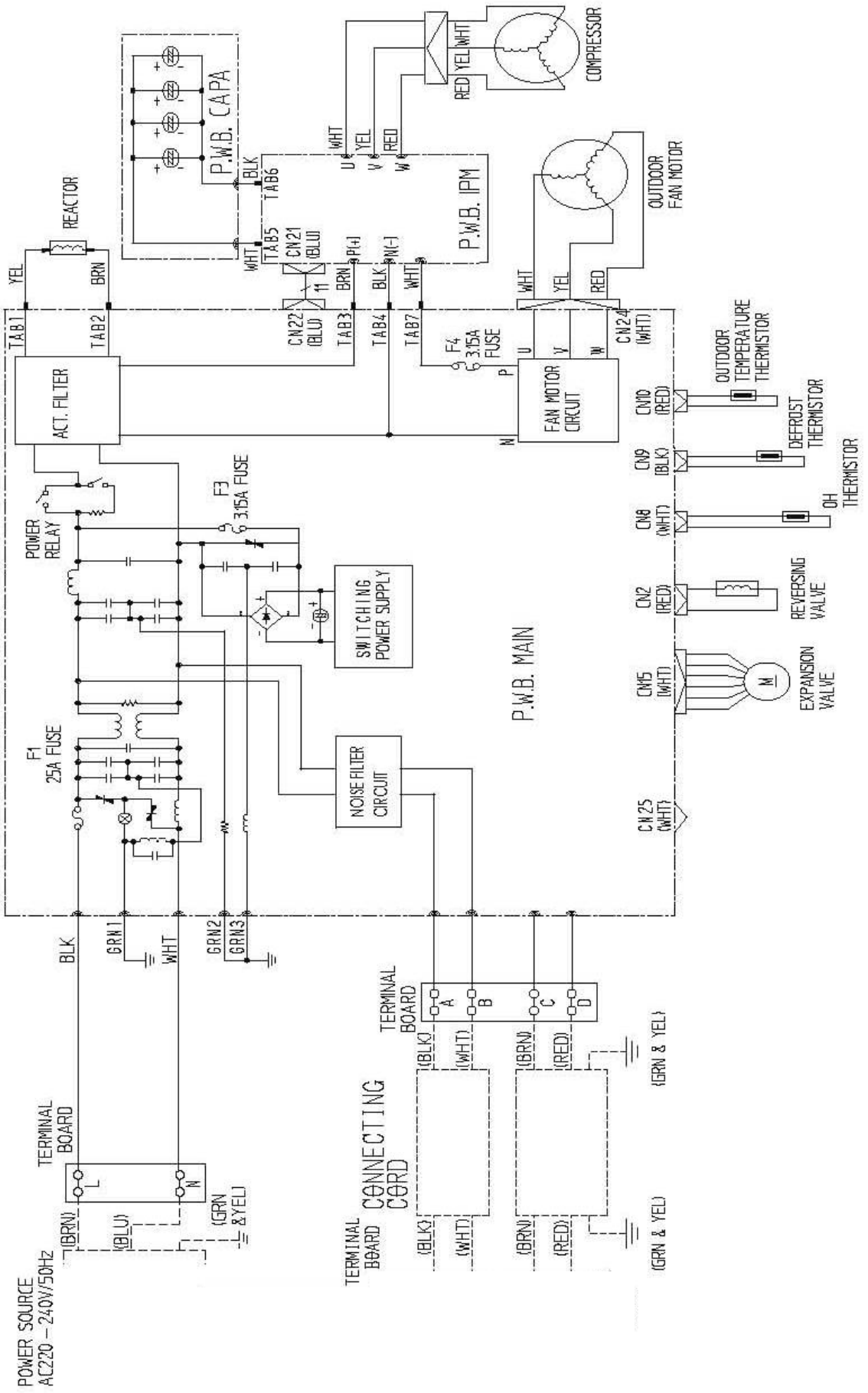

7.2.18. RAK-18PEA, RAK-25PEA, RAK-35PEA, RAK-50PEA

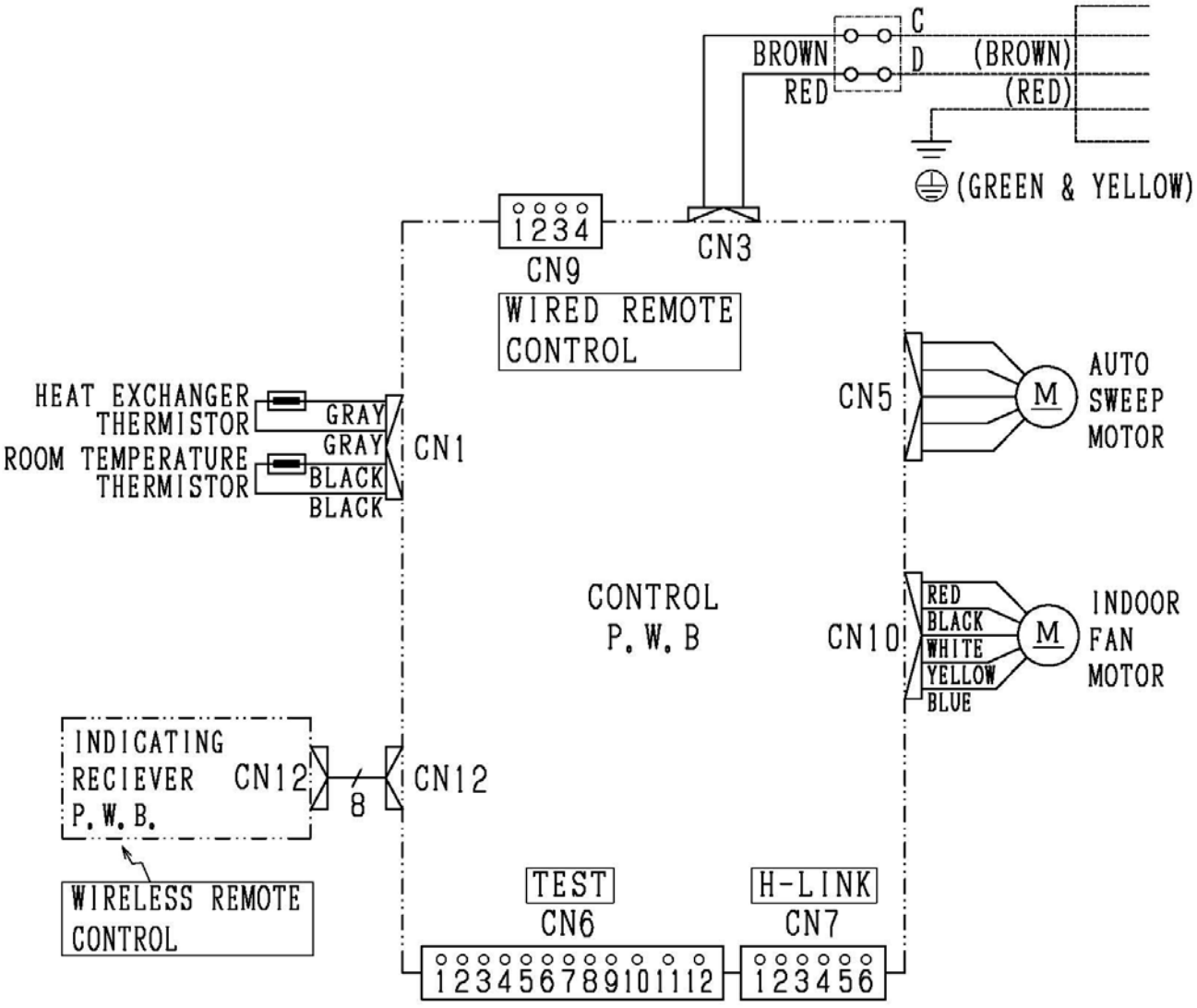

7.2.19. RAC-18WEA, RAC-25WEA

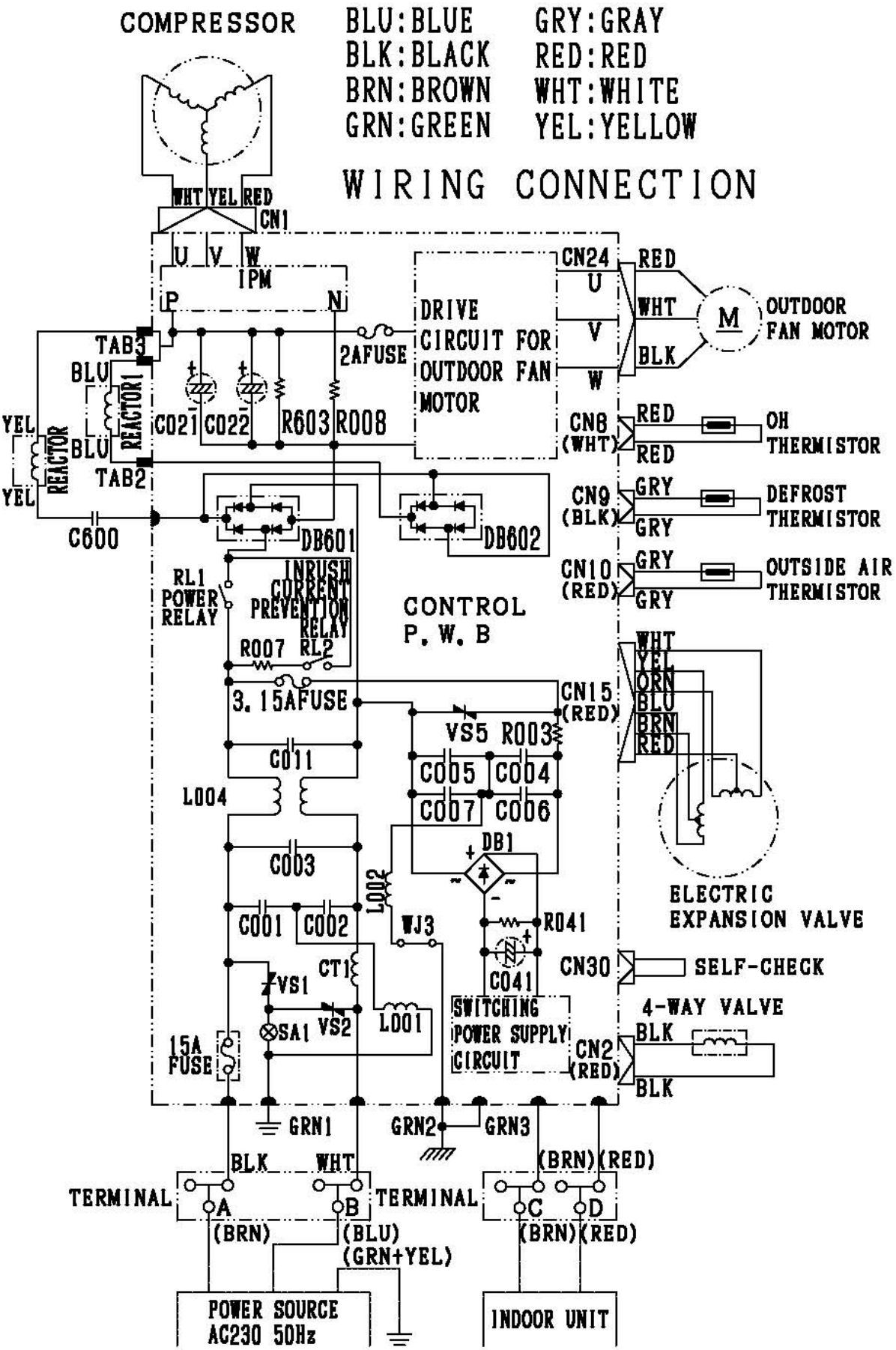

7.2.20. RAC-35WEA

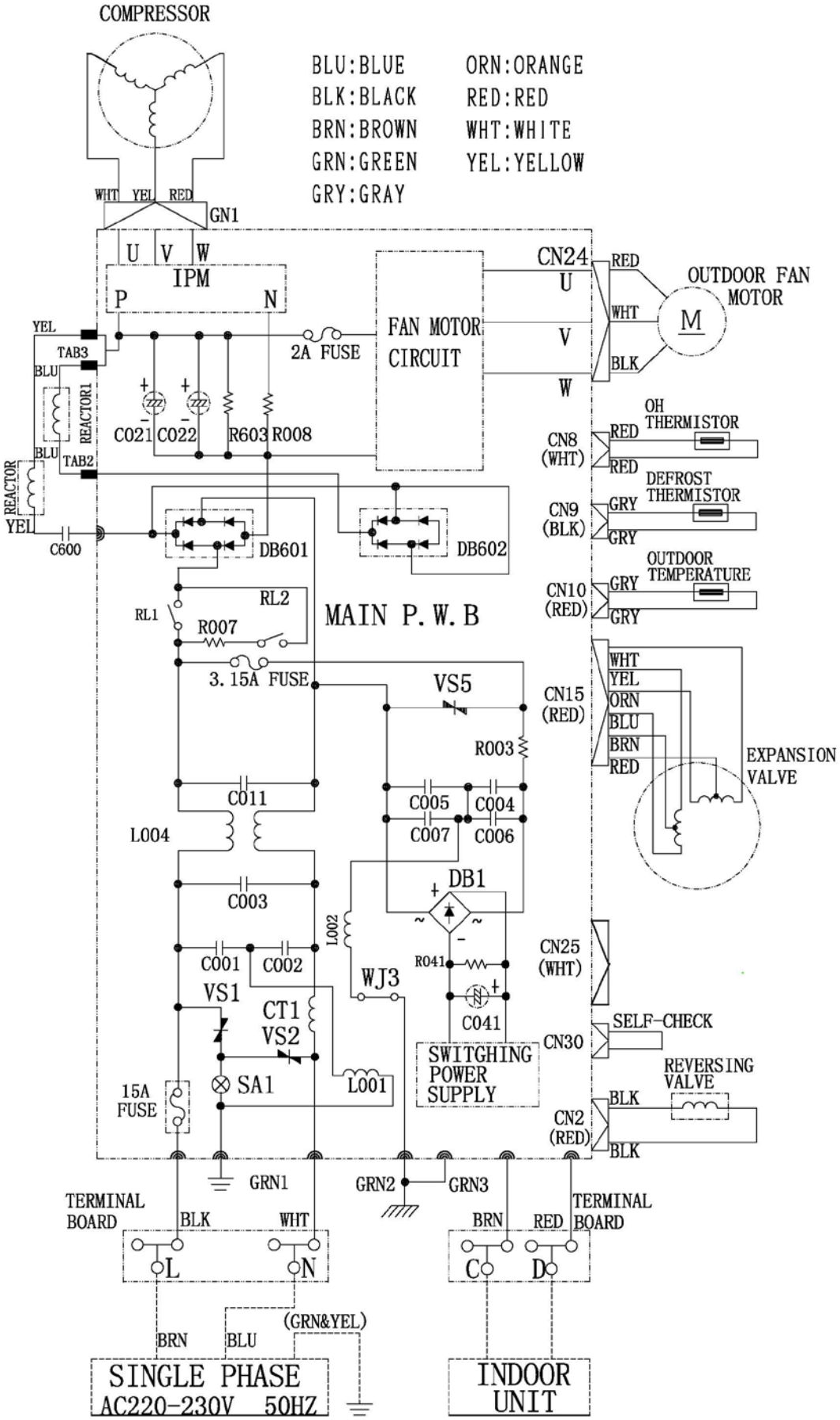

7.2.21. RAC-50WEA

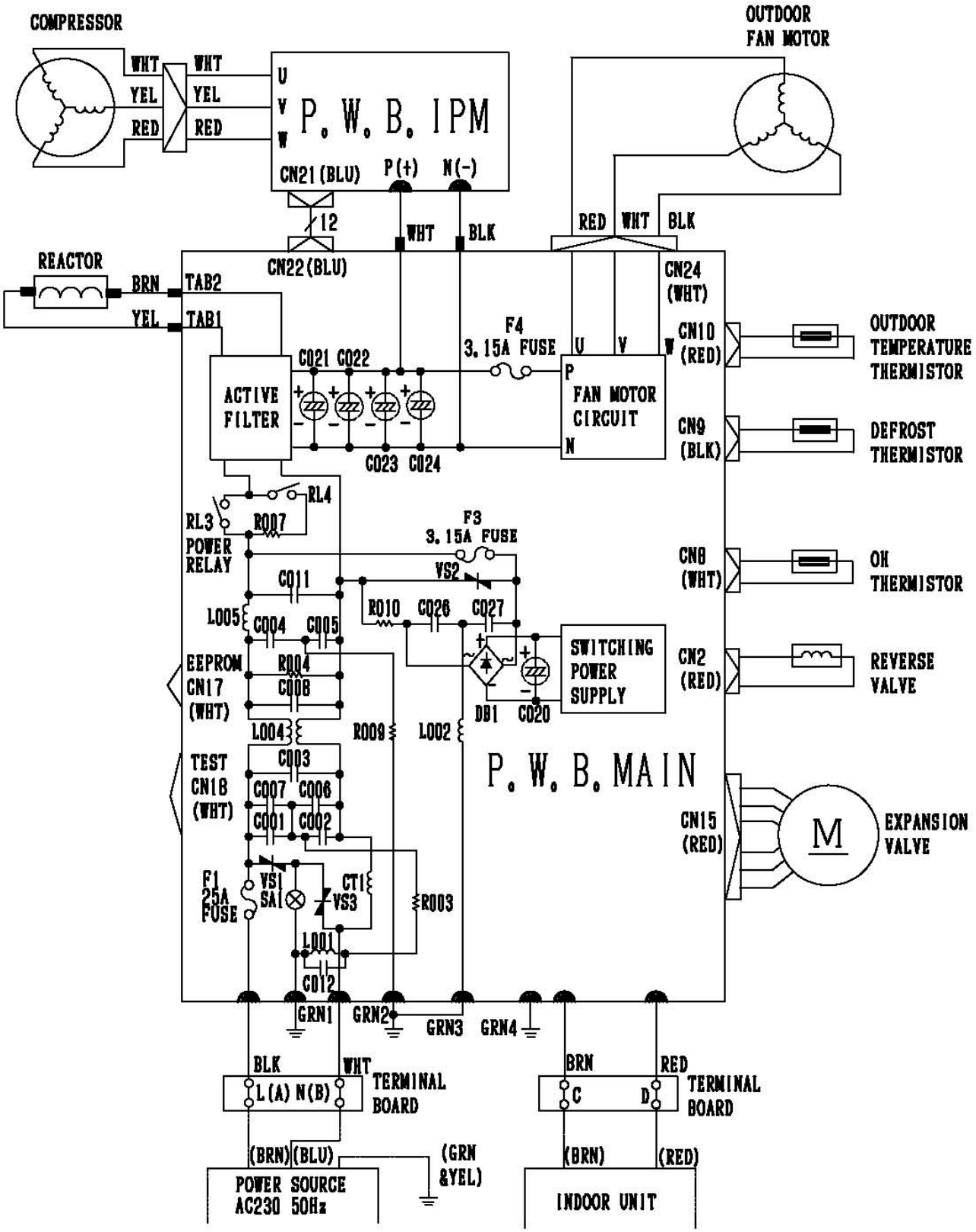

7.2.22. RAF-25PXA, RAF-35PXA, RAF-50PXA

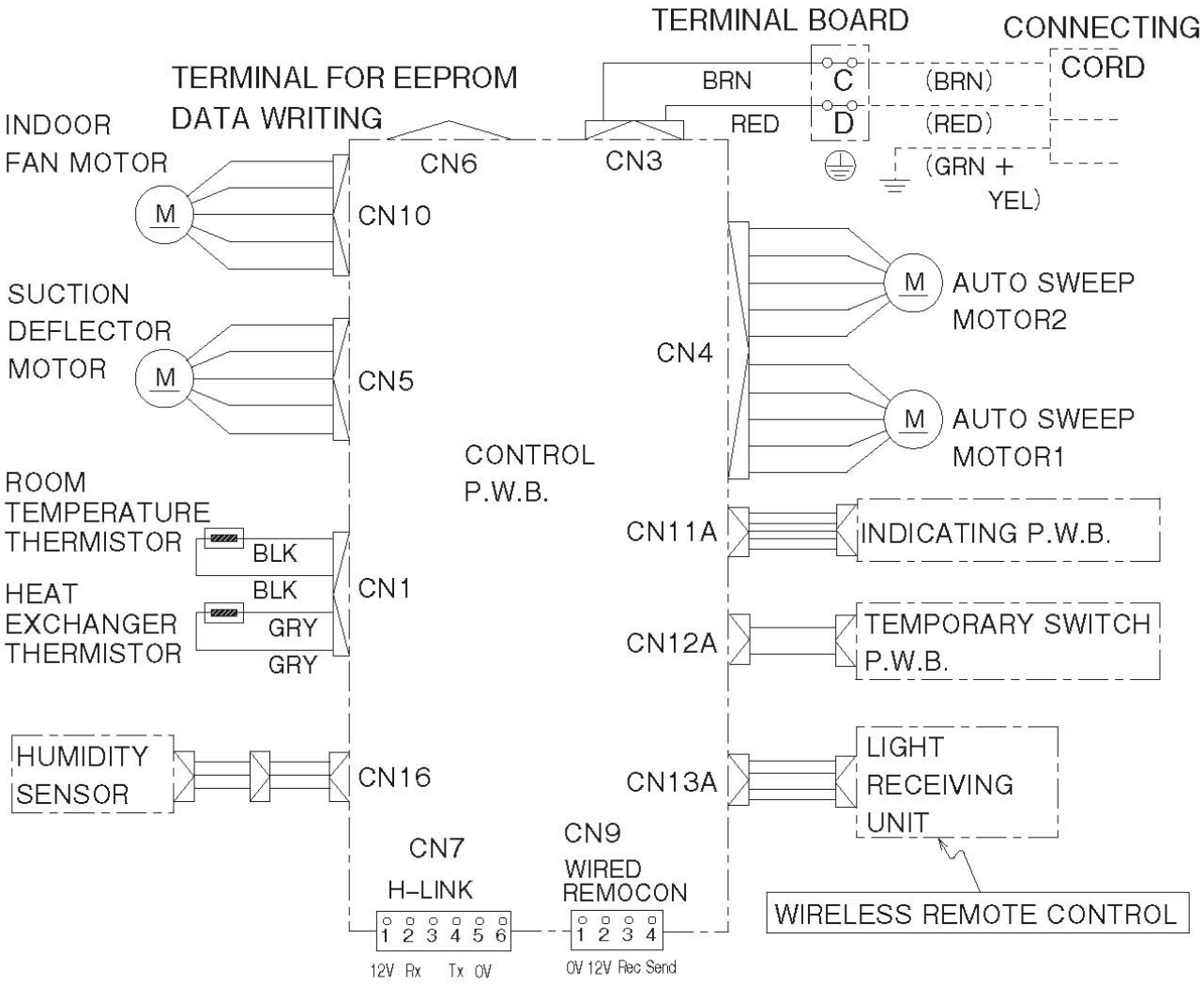

7.2.23. RAC-25FXA, RAC-35FXA

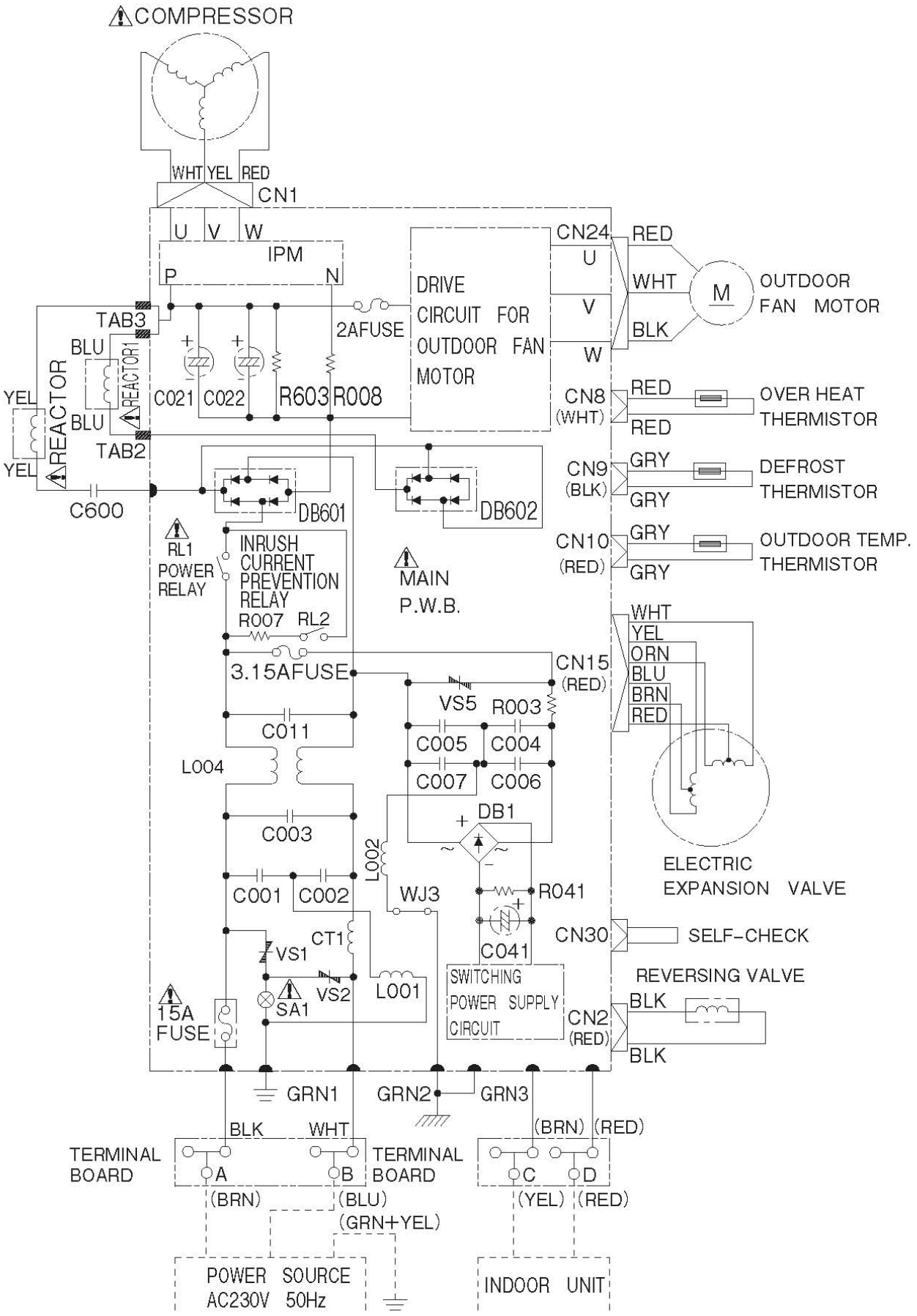

7.2.24. RAC-50FXA

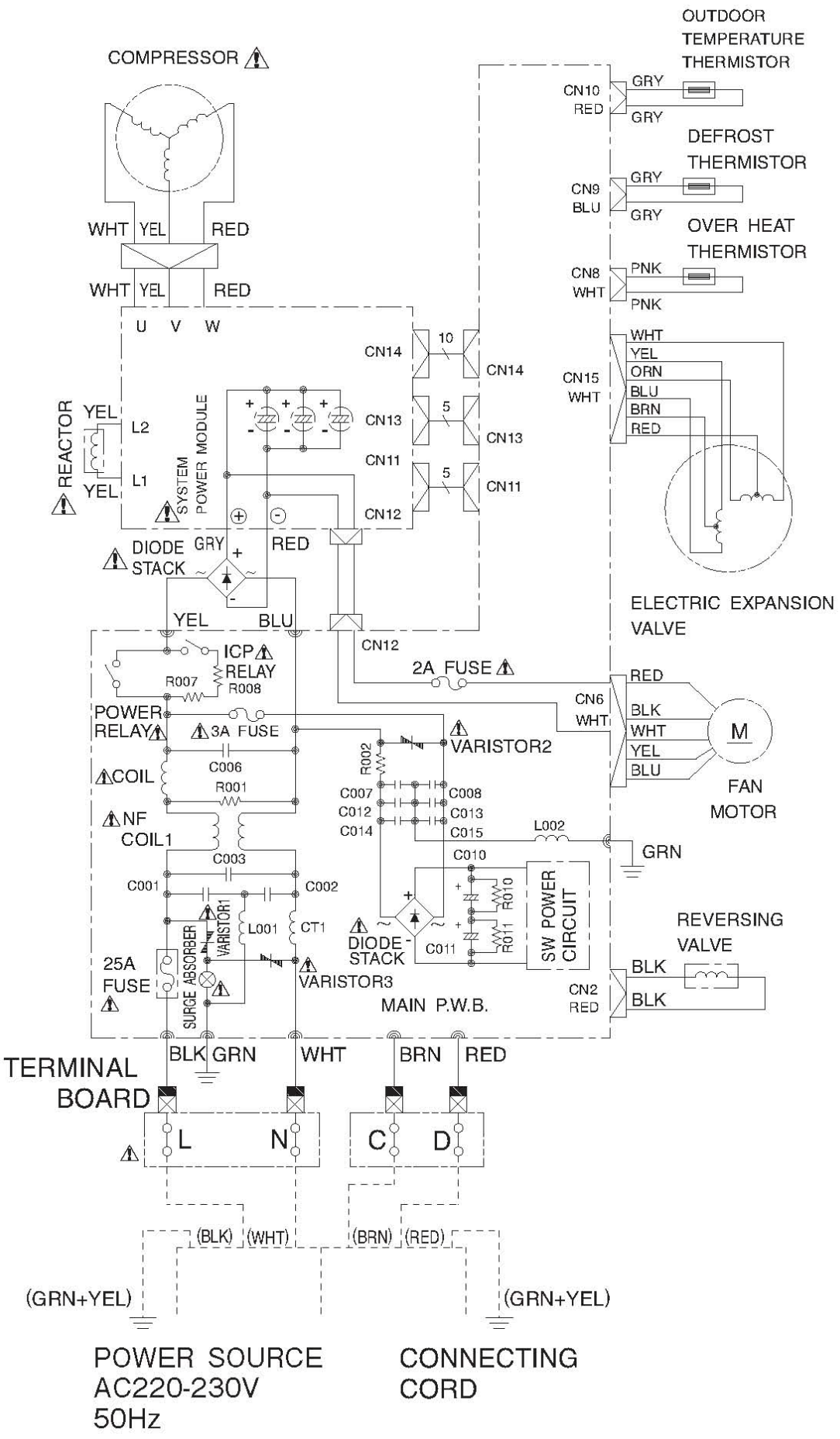

7.2.25. RAF-25RPA, RAF-35RPA, RAF-50RPA

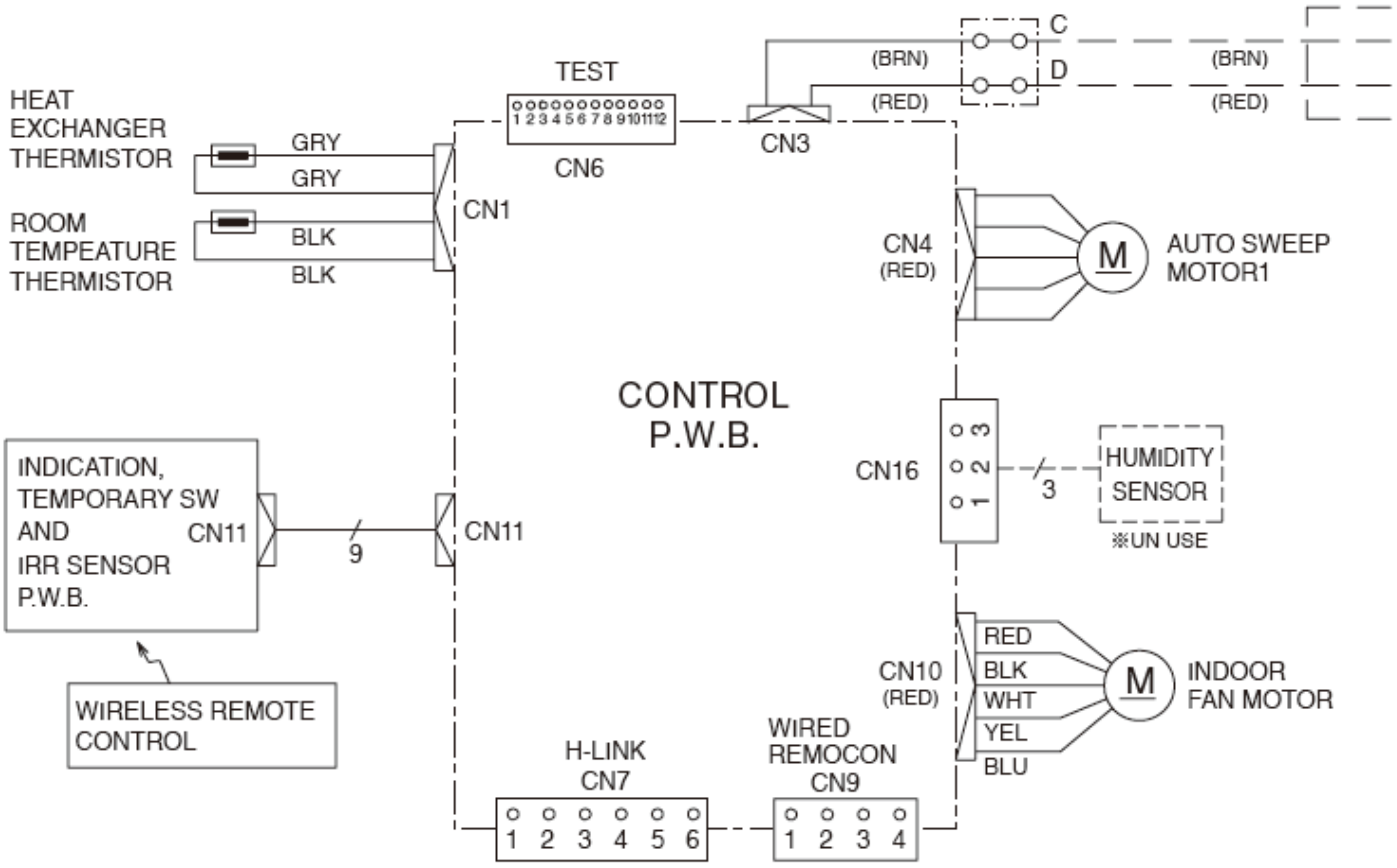

7.2.26. RAC-25FPA, RAC-35FPA

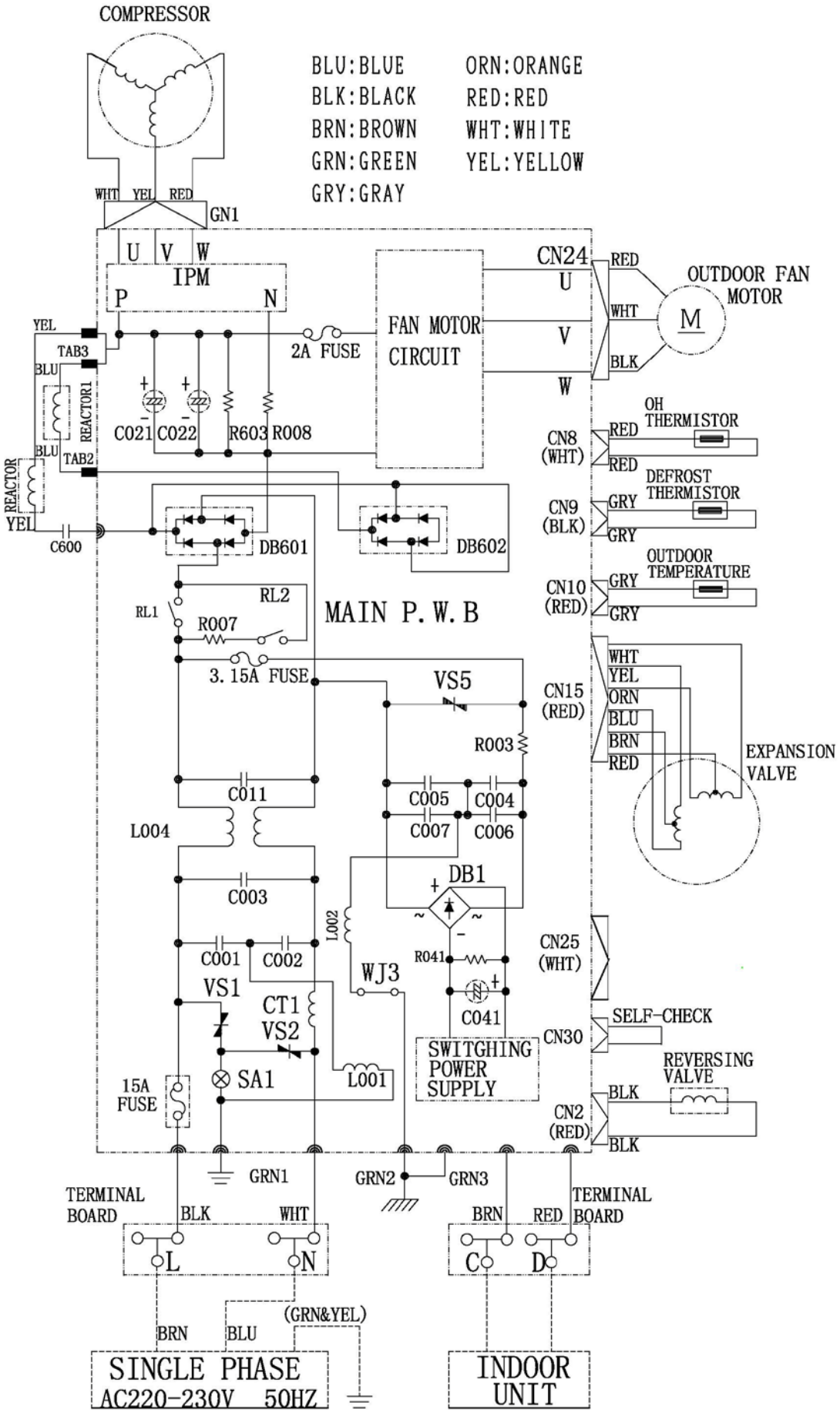

7.2.27. RAC-50FPA

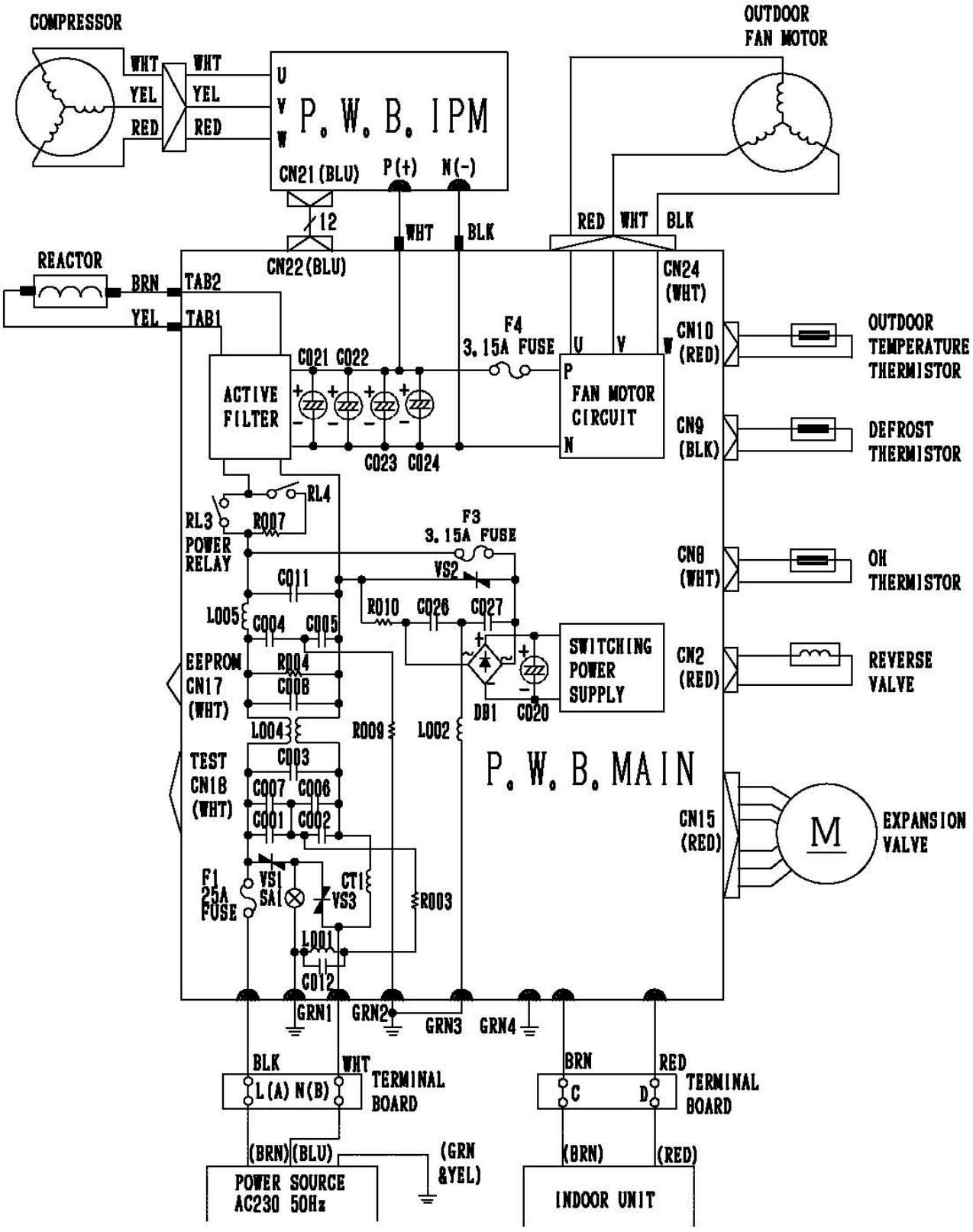

7.2.28. RAD-50PPA, RAD-60PPA, RAD-70PPA

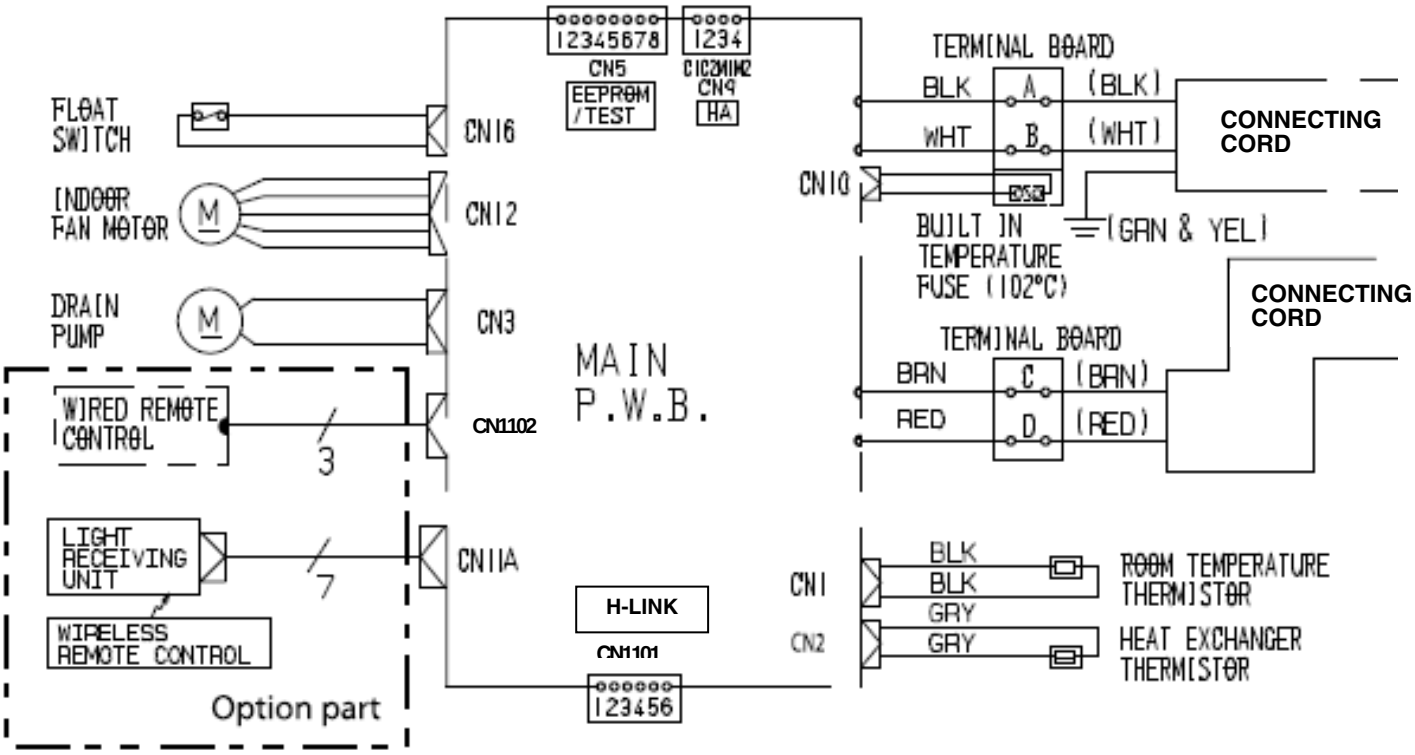

7.2.29. RAC-50DPA, RAC-60DPA, RAC-70DPA

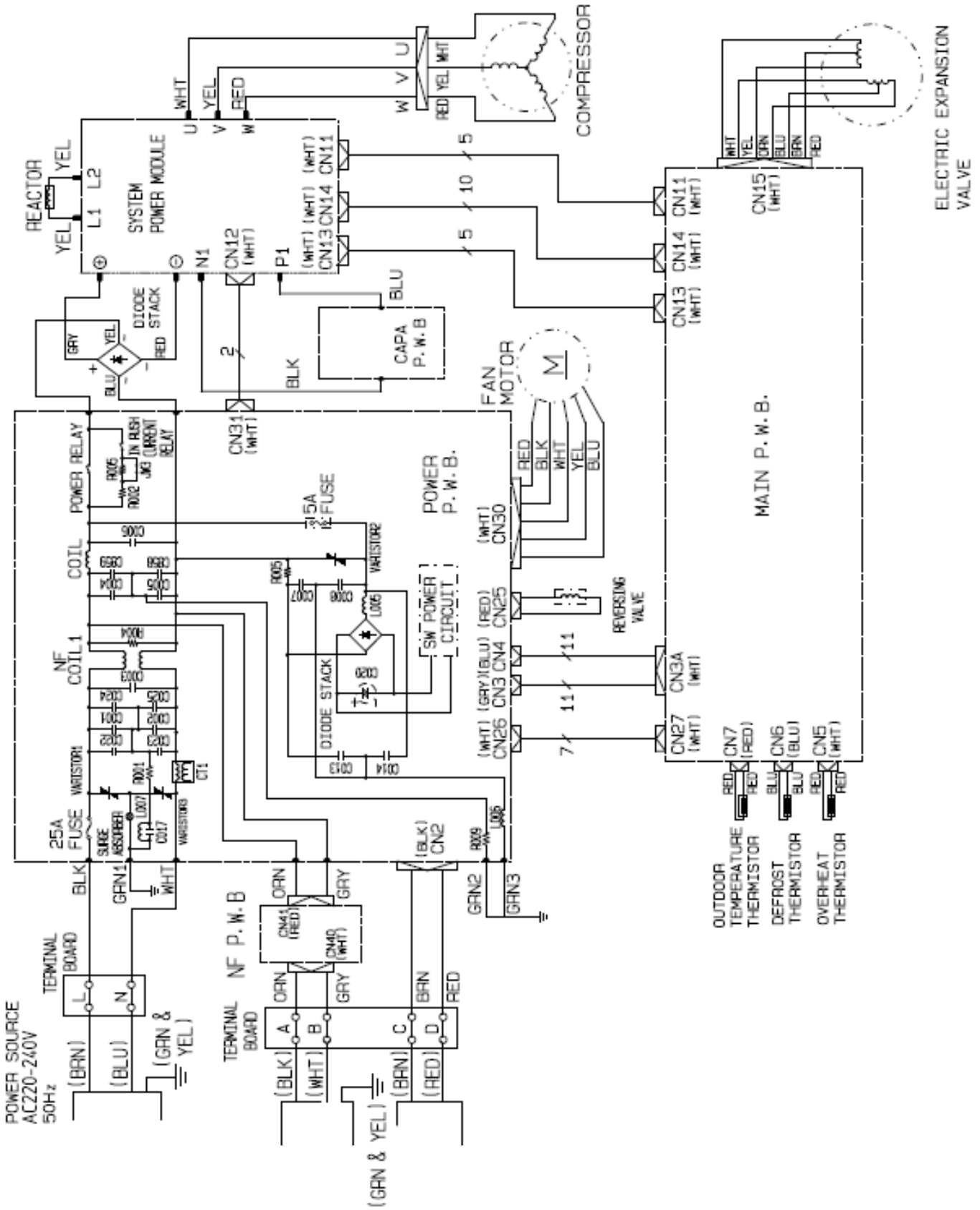

8 REFRIGERANT CYCLE

CONTENT

8 REFRIGERANT CYCLE 8-1

8.1. MONOZONE/MULTIZONE INDOOR UNITS 8-2

8.1.1. WALL TYPE: RAK-18QXA 8-2
8.1.2. WALL TYPE: RAK-25QXA/35QXA/50QXA 8-2
8.1.3. WALL TYPE: RAK-18QPA/25QPA 8-2
8.1.4. WALL TYPE: RAK-35QPA 8-3
8.1.5. WALL TYPE: RAK-50QPA 8-3
8.1.6. FLOOR TYPE: RAF-25QXA/35QXA/50QXA 8-4
8.1.7. FLOOR TYPE: RAF-25RPA/35RPA 8-4
8.1.8. FLOOR TYPE: RAF-50RPA 8-4
8.1.9. CEILING CASSETTE: RAI-25RPA/35RPA/50RPA 8-5
8.1.10. DUCT TYPE: RAD-18RPA/25RPA/35RPA 8-5
8.1.11. DUCT TYPE: RAD-50RPA 8-5

8.2. MONOZONE/MULTIZONE OUTDOOR UNITS 8-6

8.2.1. MONOZONE: RAC-25NPA/35NPA 8-6
8.2.2. MONOZONE: RAC-50NPA 8-6
8.2.3. 2 ROOMS MULTIZONE: RAM-36NP2A 8-6
8.2.4. 2 ROOMS MULTIZONE: RAM-53NP2A 8-8
8.2.5. 3 ROOMS MULTIZONE: RAM-53NP3A 8-9
8.2.6. 3 ROOMS MULTIZONE: RAM-68NP3A 8-11
8.2.7. 4 ROOMS MULTIZONE: RAM-70NP4A 8-12
8.2.8. 5 ROOMS MULTIZONE: RAM-90NP5A 8-13
8.2.9. 6 ROOMS MULTIZONE: RAM-130NP6A 8-14

8.3. MONO SPLIT 8-16

8.3.1. WALL TYPE: RAK-18PSA/25PSA/35PSA / RAC-18WSA/25WSA/35WSA 8-16
8.3.2. WALL TYPE: RAK-18PSAN/25PSAN/35PSAN / RAC-18WSAN/25WSAN/35WSAN 8-17
8.3.3. WALL TYPE: RAK-18PSPA/25PSPA/35PSPA / RAC-18WSPA/25WSPA/35WSPA 8-17
8.3.4. WALL TYPE: RAK-25PXA / RAC-25WXA 8-18
8.3.5. WALL TYPE: RAK-35PXA / RAC-35WXA 8-19
8.3.6. WALL TYPE: RAK-50PXA / RAC-50WXA 8-20
8.3.7. WALL TYPE: RAK-18PPA/25PPA / RAC-18WPA/25WPA 8-21
8.3.8. WALL TYPE: RAK-35PPA / RAC-35WPA 8-21
8.3.9. WALL TYPE: RAK-50PPA / RAC-50WPA 8-22
8.3.10. WALL TYPE: RAK-60PPA / RAC-60WPA 8-23
8.3.11. WALL TYPE: RAK-70PPA / RAC-70WPA 8-24
8.3.12. WALL TYPE: RAK-18PEA/25PEA / RAC-18WEA/25WEA 8-25
8.3.13. WALL TYPE: RAK-35PEA / RAC-35WEA 8-26
8.3.14. WALL TYPE: RAK-50PEA / RAC-50WEA 8-26
8.3.15. FLOOR TYPE: RAF-25PXA/35PXA / RAC-25FXA/35FXA 8-27
8.3.16. FLOOR TYPE: RAF-50PXA / RAC-50FXA 8-28
8.3.17. FLOOR TYPE: RAF-25RPA / RAC-25FPA 8-29
8.3.18. FLOOR TYPE: RAF-35RPA / RAC-35FPA 8-29
8.3.19. FLOOR TYPE: RAF-50RPA / RAC-50FPA 8-30
8.3.20. DUCT TYPE: RAD-50PPA/60PPA / RAC-50DPA/60DPA 8-31
8.3.21. DUCT TYPE: RAD-70PPA / RAC-70DPA 8-32

8.1. MONOZONE/MULTIZONE INDOOR UNITS

8.1.1. WALL TYPE: RAK-18QXA

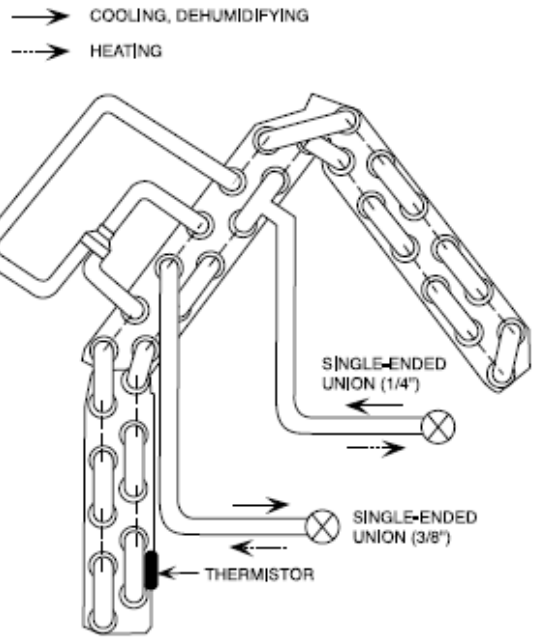

8.1.2. WALL TYPE: RAK-25QXA/35QXA/50QXA

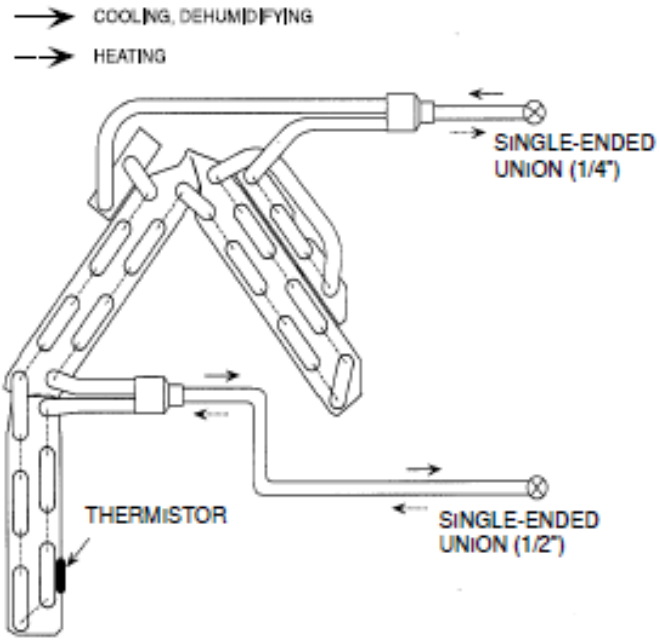

8.1.3. WALL TYPE: RAK-18QPA/25QPA

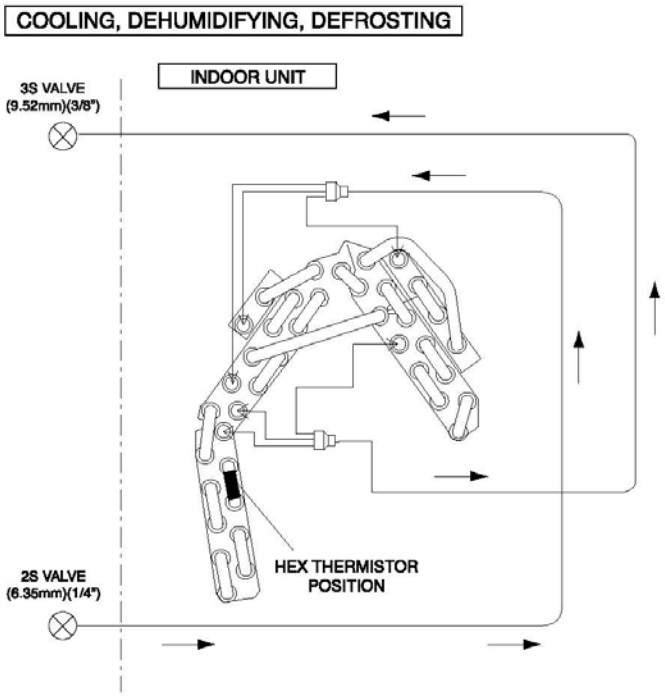

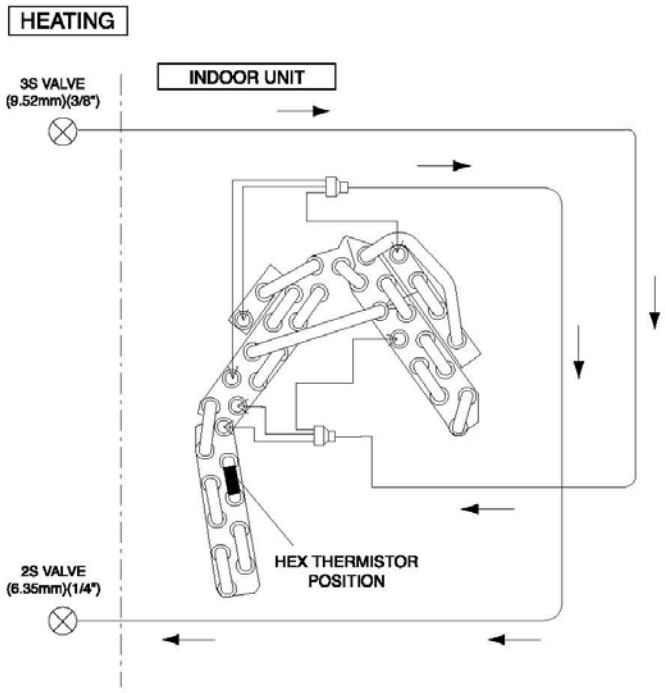

8.1.4. WALL TYPE: RAK-35QPA

COOLING, DEHUMIDIFYING, DEFROSTING

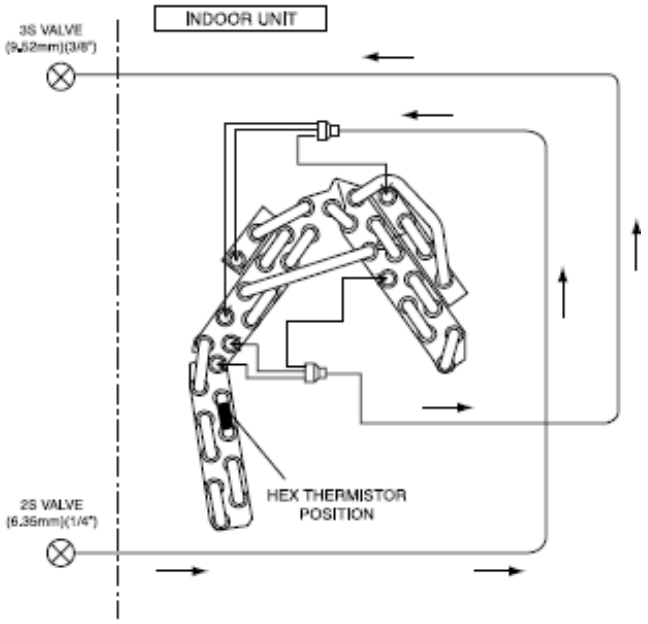

HEATING

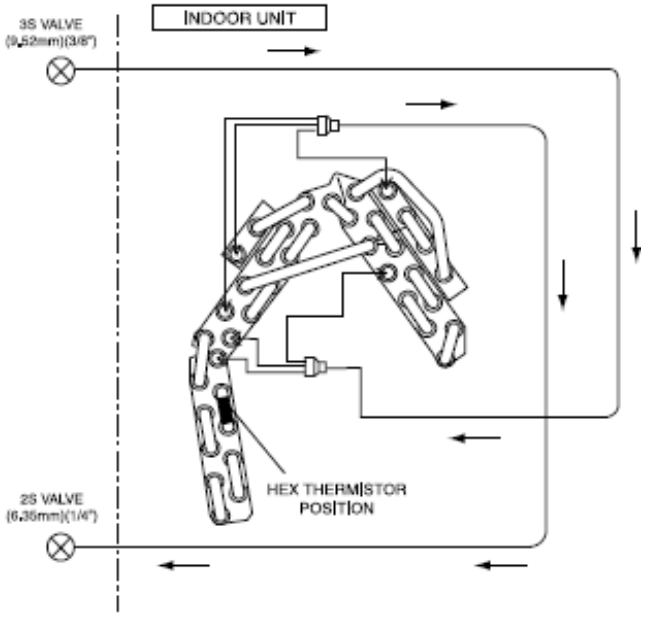

8.1.5. WALL TYPE: RAK-50QPA

COOLING, DEHUMIDIFYING, DEFROSTING

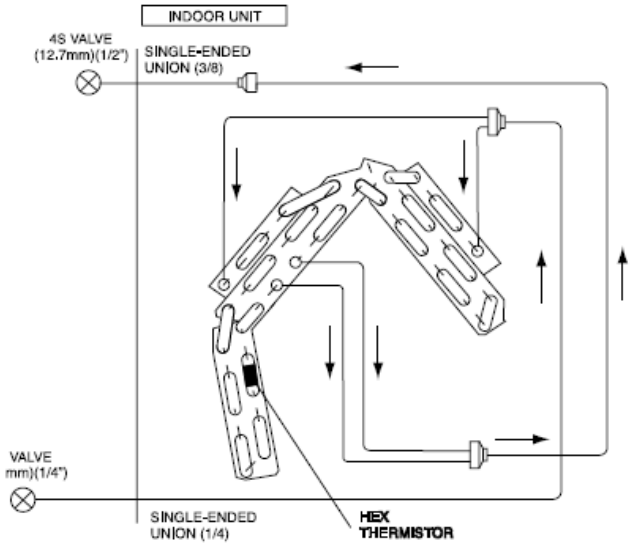

HEATING

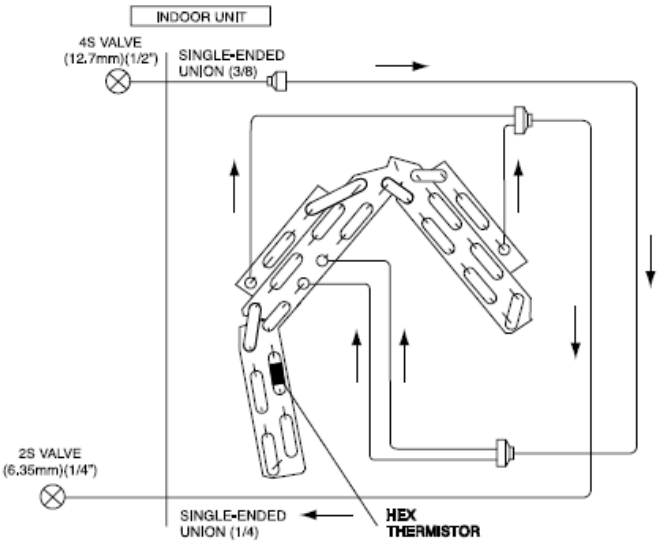

8.1.6. FLOOR TYPE: RAF-25QXA/35QXA/50QXA

COOLING CYCLE

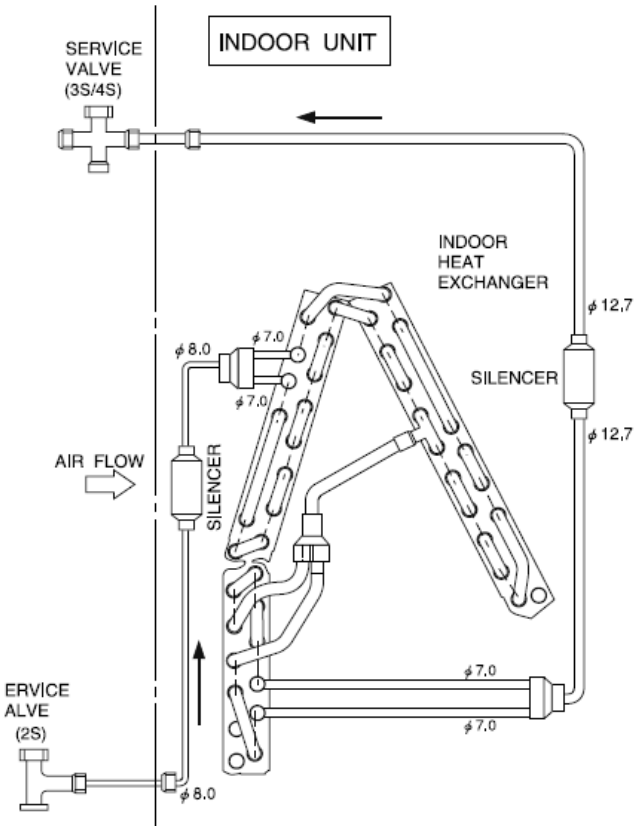

HEATING CYCLE

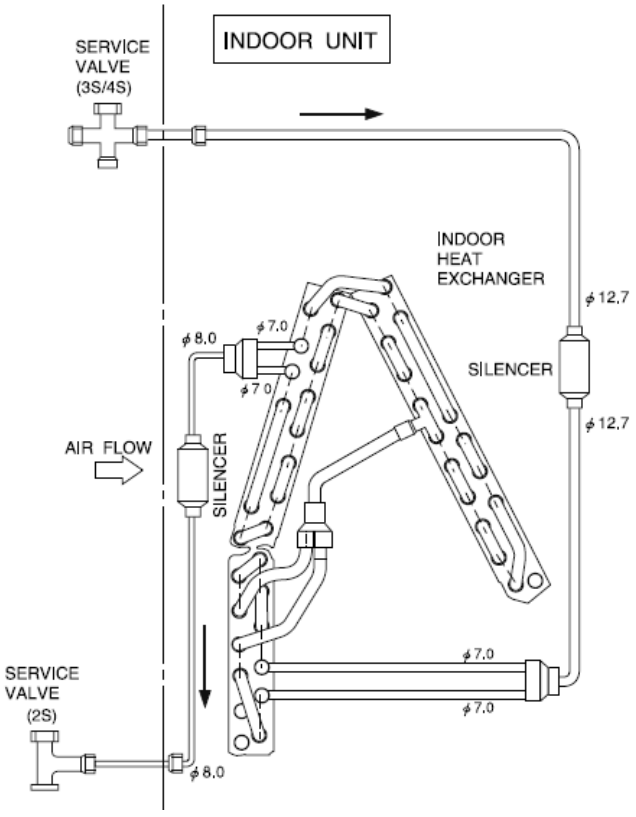

8.1.7. FLOOR TYPE: RAF-25RPA/35RPA

COOLING
HEATING

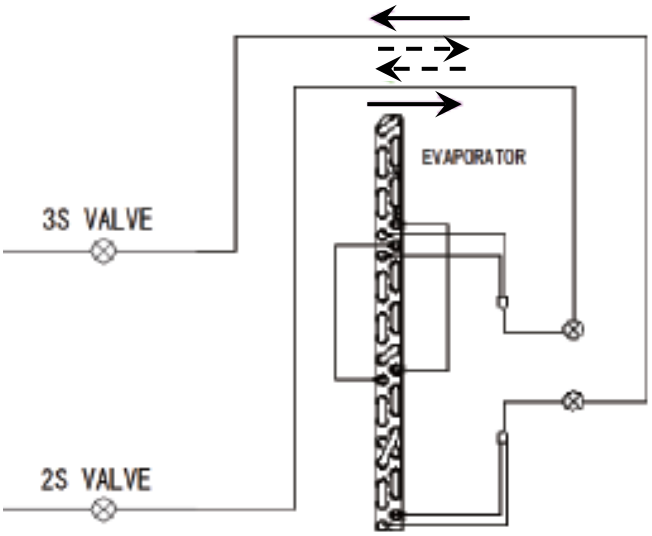

8.1.8. FLOOR TYPE: RAF-50RPA

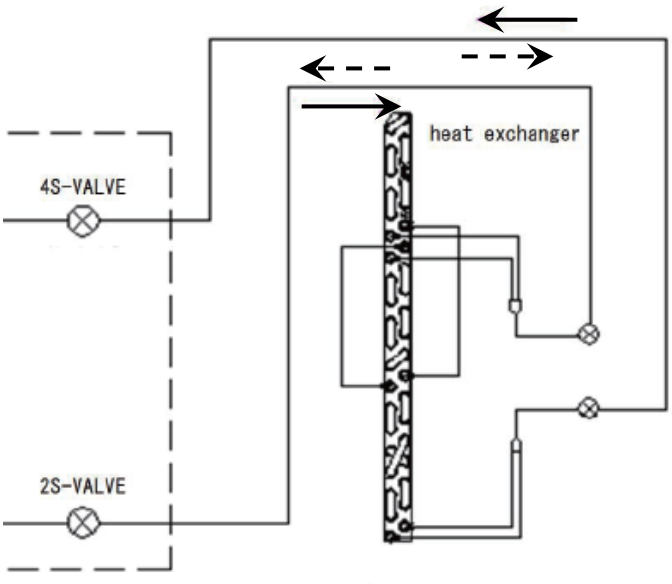

8.1.9. CEILING CASSETTE: RAI-25RPA/35RPA/50RPA

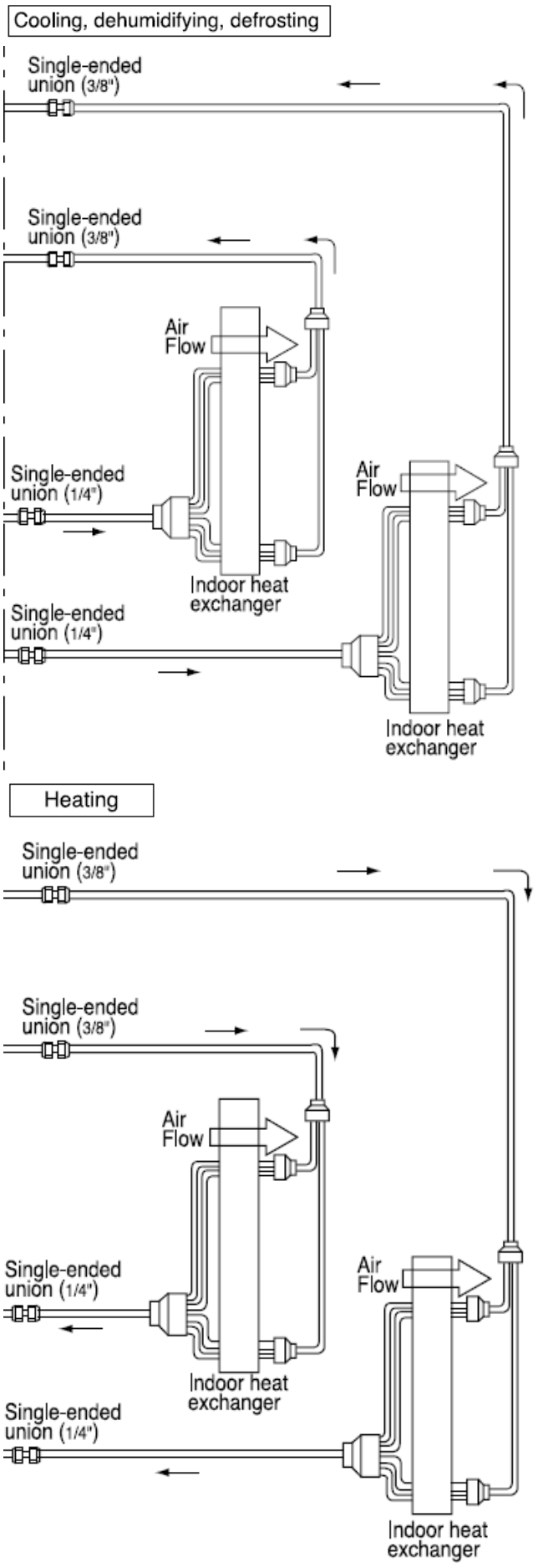

8.1.10. DUCT TYPE: RAD-18RPA/25RPA/35RPA

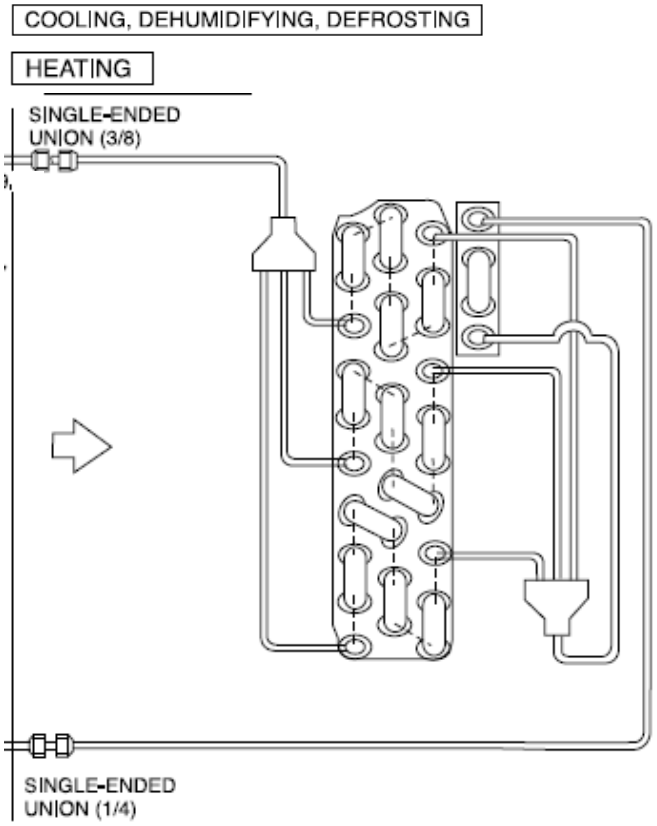

8.1.11. DUCT TYPE: RAD-50RPA

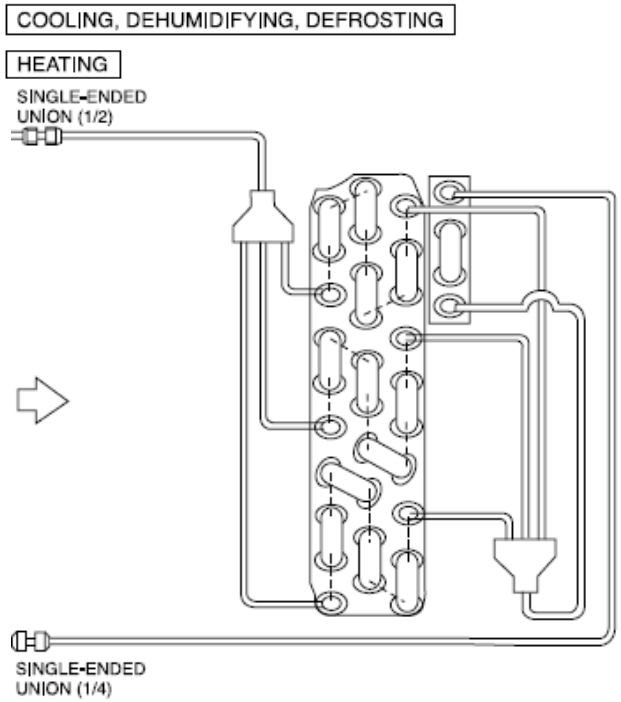

8.2. MONOZONE/MULTIZONE OUTDOOR UNITS

8.2.1. MONOZONE: RAC-25NPA/35NPA

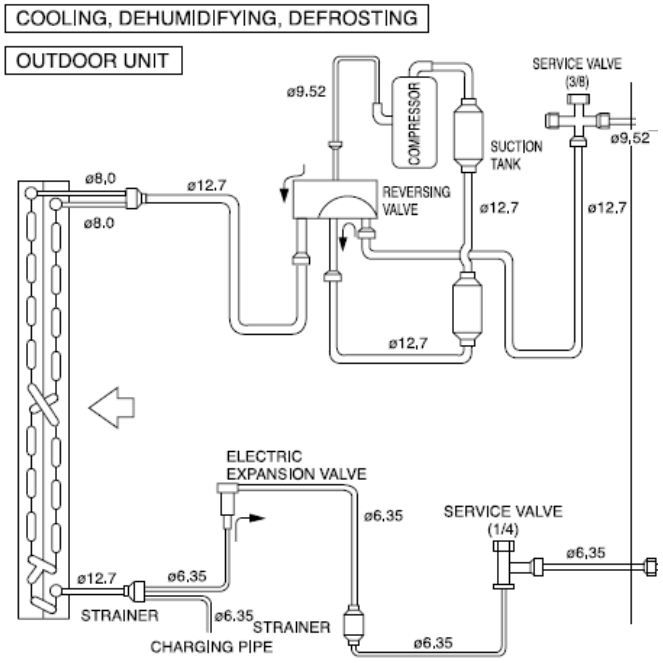

8.2.2. MONOZONE: RAC-50NPA

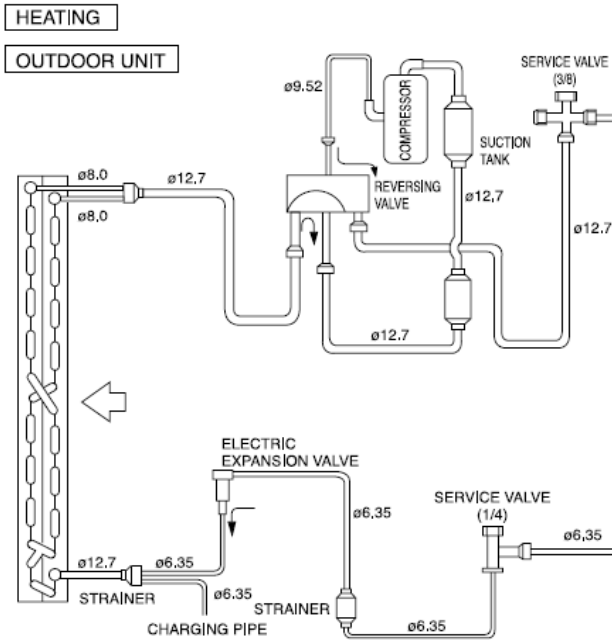

8.2.3. 2 ROOMS MULTIZONE: RAM-36NP2A

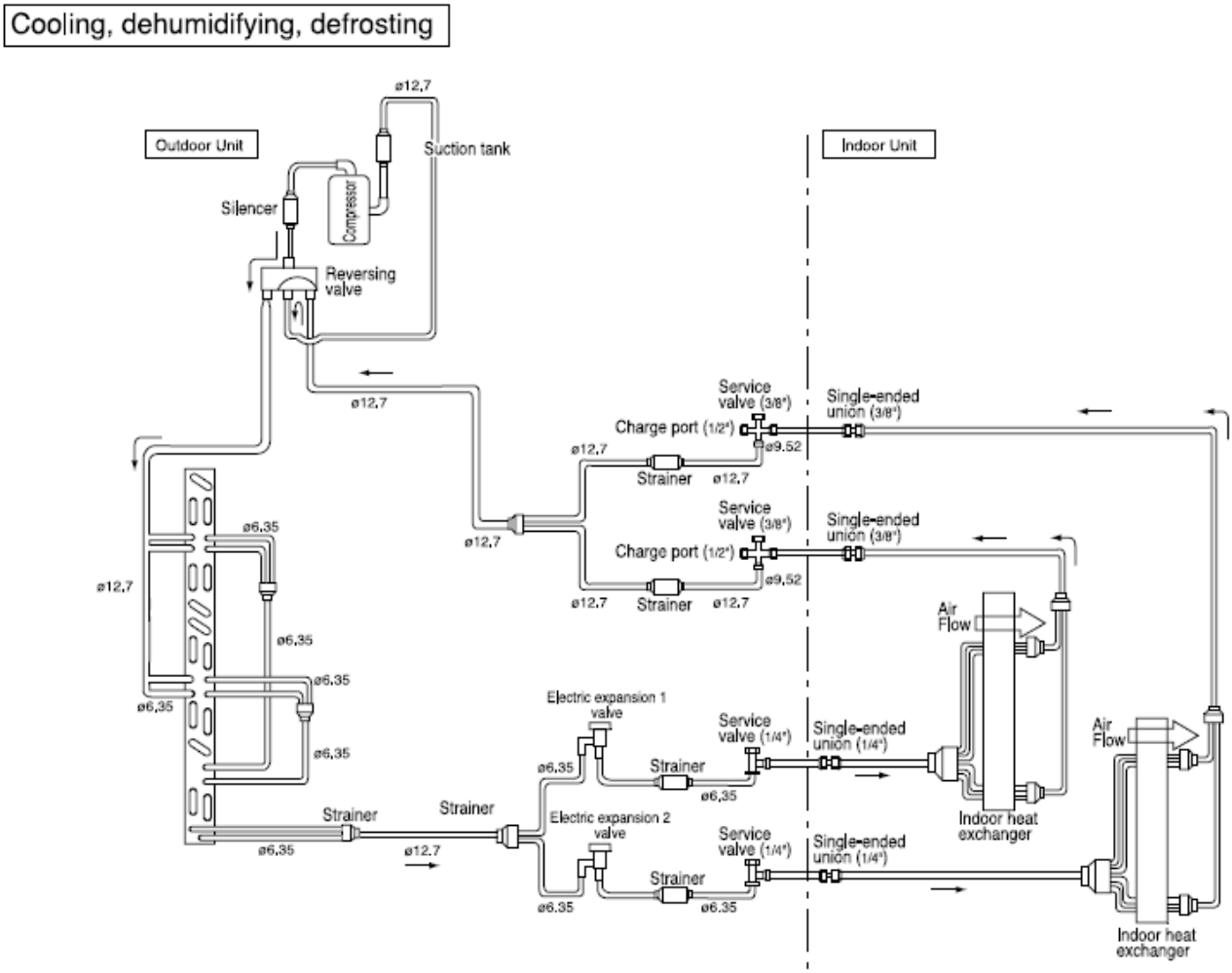

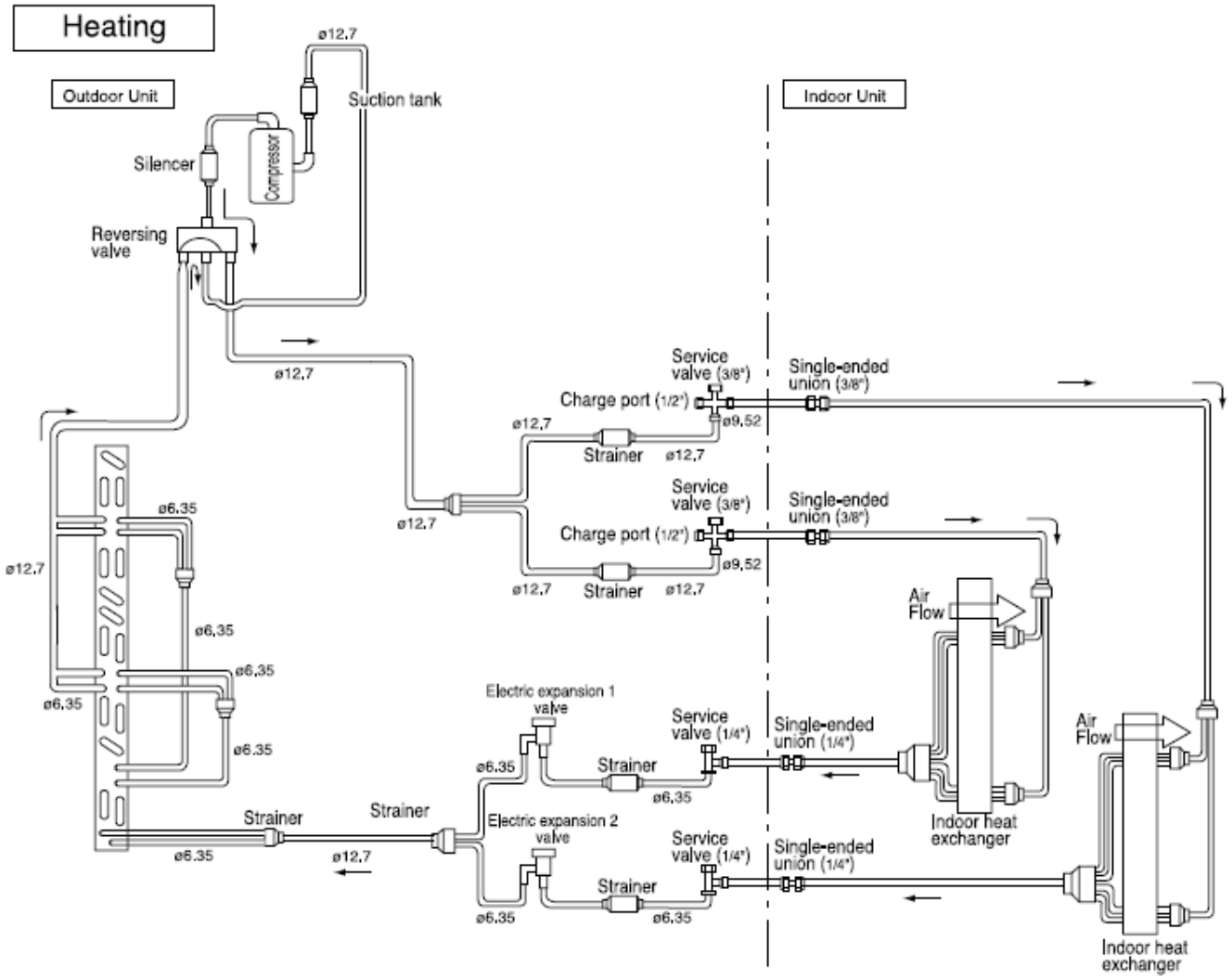
Heating
Outdoor Unit
Indoor Unit
Suction tank
ø12.7
Silencer
Compressor
Reversing valve
ø12.7
Service valve (3/8")
Single-ended union (3/8")
Charge port (1/2")
ø9,52
ø12,7
Strainer
ø12,7
Service valve (3/8")
Single-ended union (3/8")
Charge port (1/2")
ø9,52
ø12,7
Strainer
ø12,7
ø12,7
ø6.35
ø6,35
ø6,35
ø6.35
ø6.35
Air Flow
Electric expansion 1 valve
Service valve (1/4")
Single-ended union (1/4")
ø6.35
Strainer
ø6,35
Air Flow
Strainer
Strainer
Electric expansion 2 valve
Indoor heat exchanger
ø6.35
ø12.7
Service valve (1/4")
Single-ended union (1/4")
Strainer
ø6.35
ø6,35
Indoor heat exchanger

8.2.4. 2 ROOMS MULTIZONE: RAM-53NP2A

Cooling, dehumidifying, defrosting

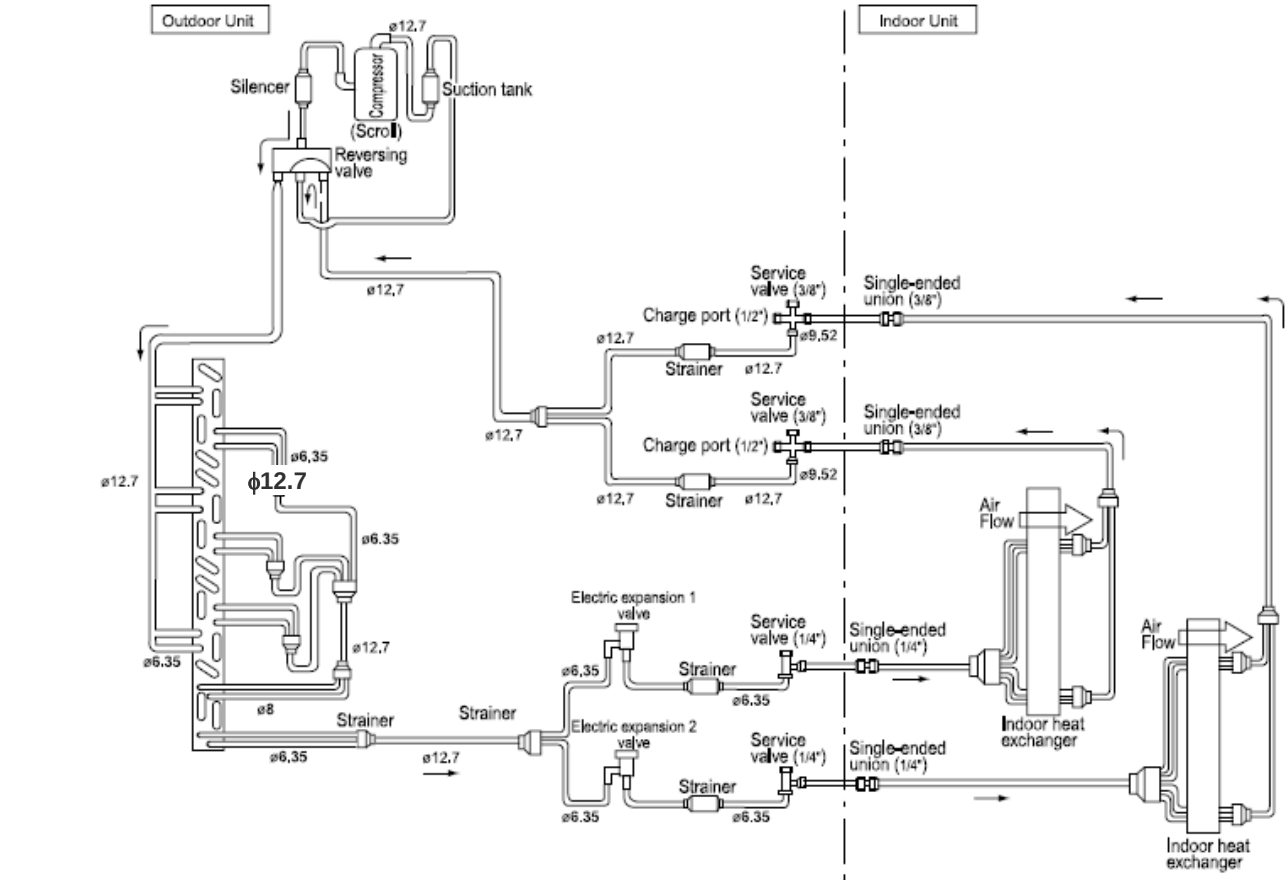

Heating

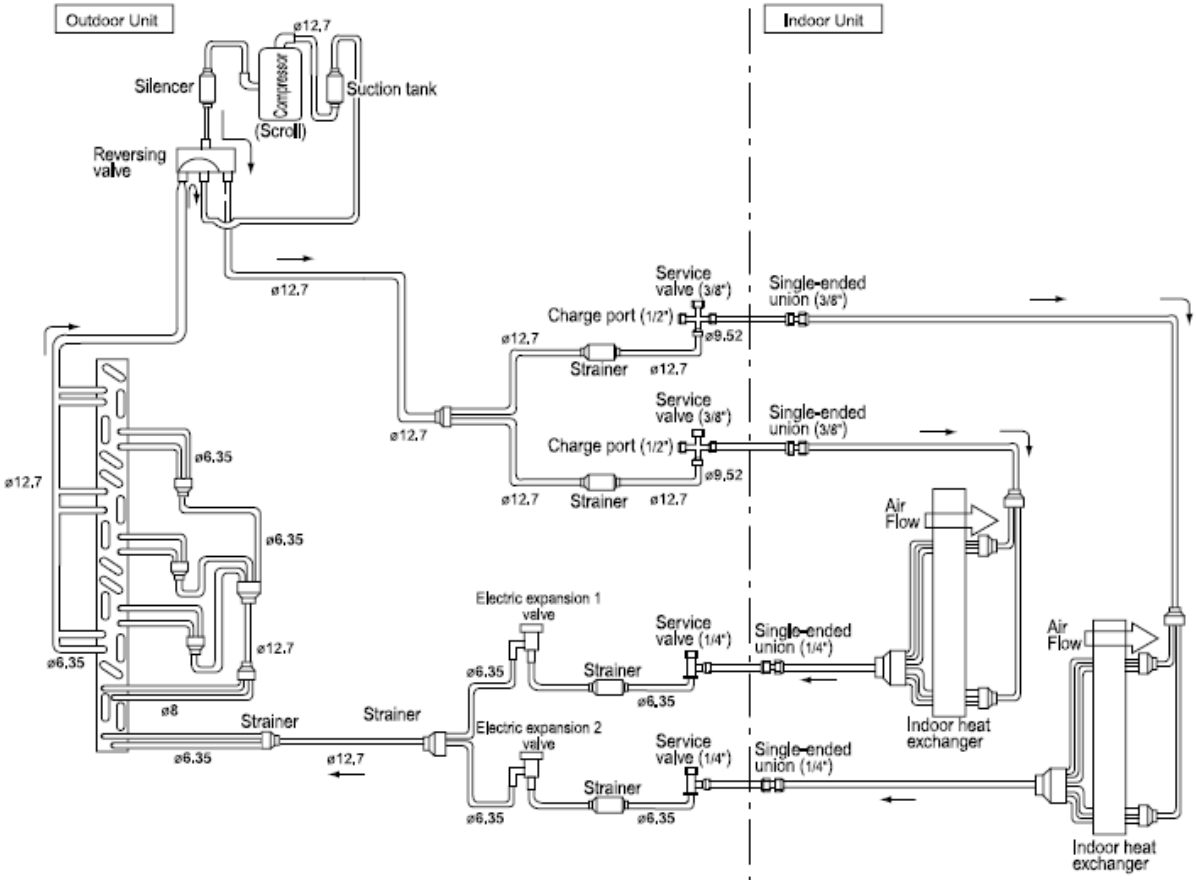

8.2.5. 3 ROOMS MULTIZONE: RAM-53NP3A

Cooling, dehumidifying, defrosting

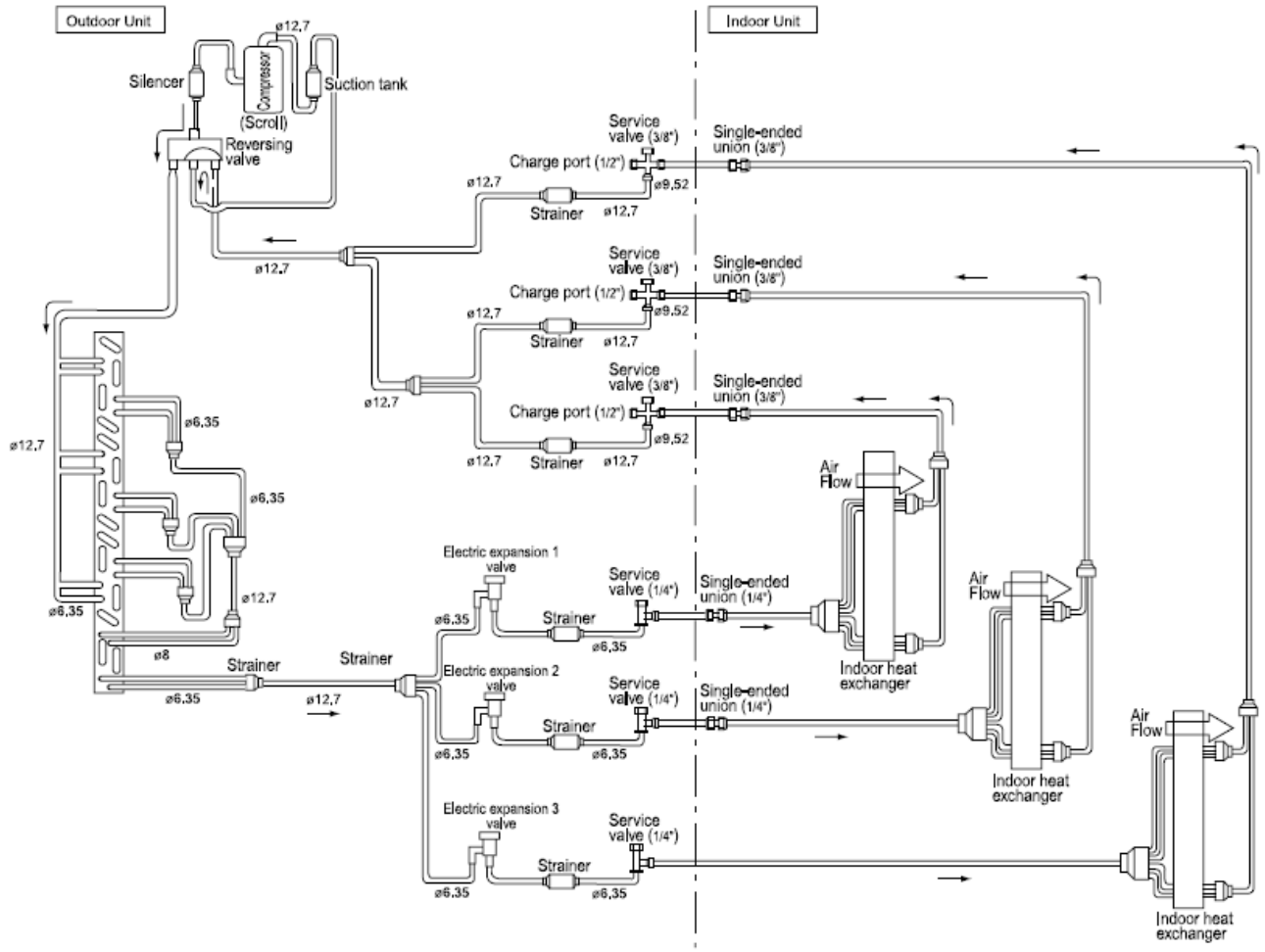

Heating

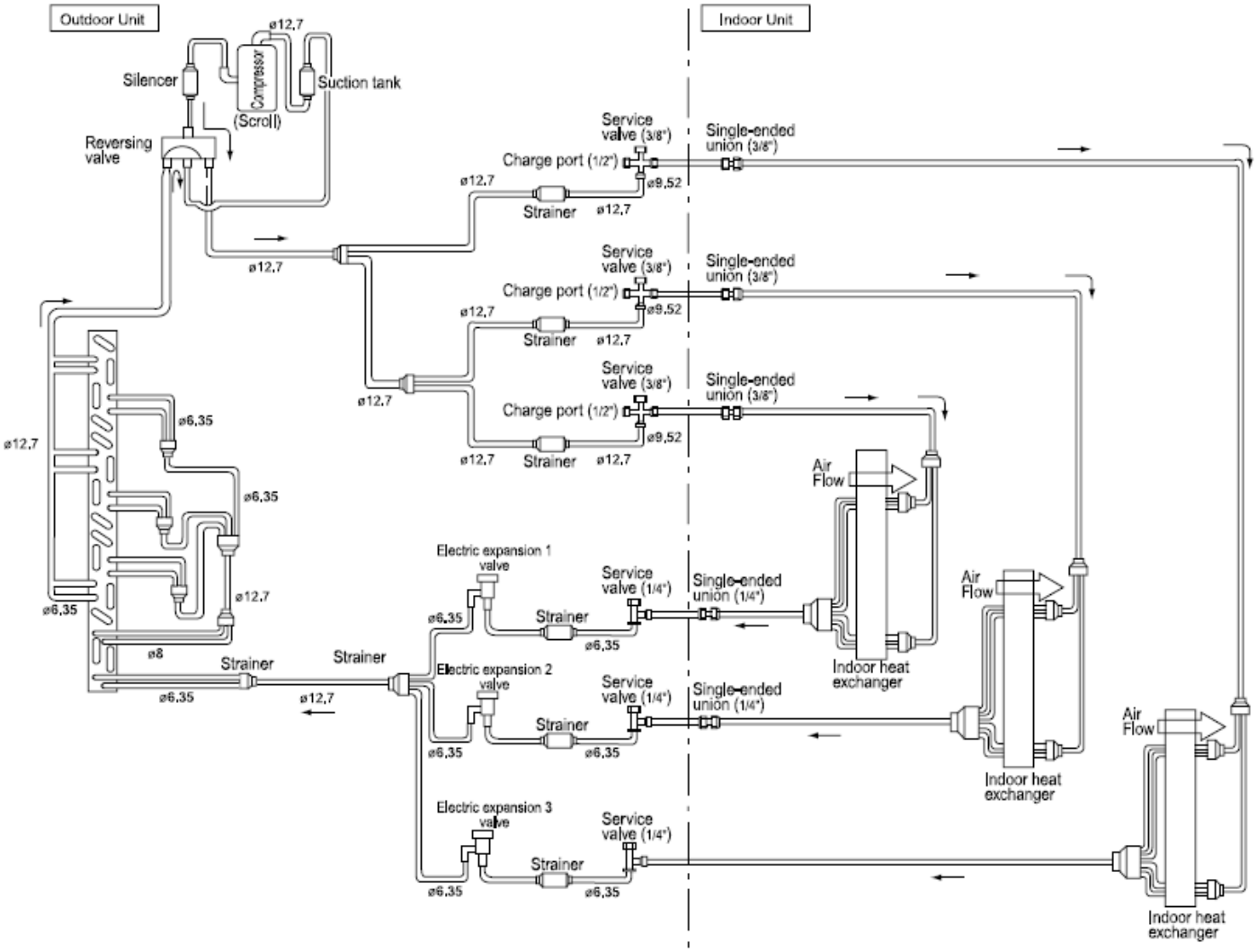
Outdoor Unit
Indoor Unit
ø12,7
Silencer
Compressor
(Scroll)
Suction tank
Reversing valve
Service valve (3/8")
Single-ended union (3/8")
Charge port (1/2")
ø9,52
Strainer
ø12,7
ø6,35
ø8
Electric expansion 1 valve
Electric expansion 2 valve
Electric expansion 3 valve
Service valve (1/4")
Single-ended union (1/4")
Air Flow
Indoor heat exchanger

8.2.6. 3 ROOMS MULTIZONE: RAM-68NP3A

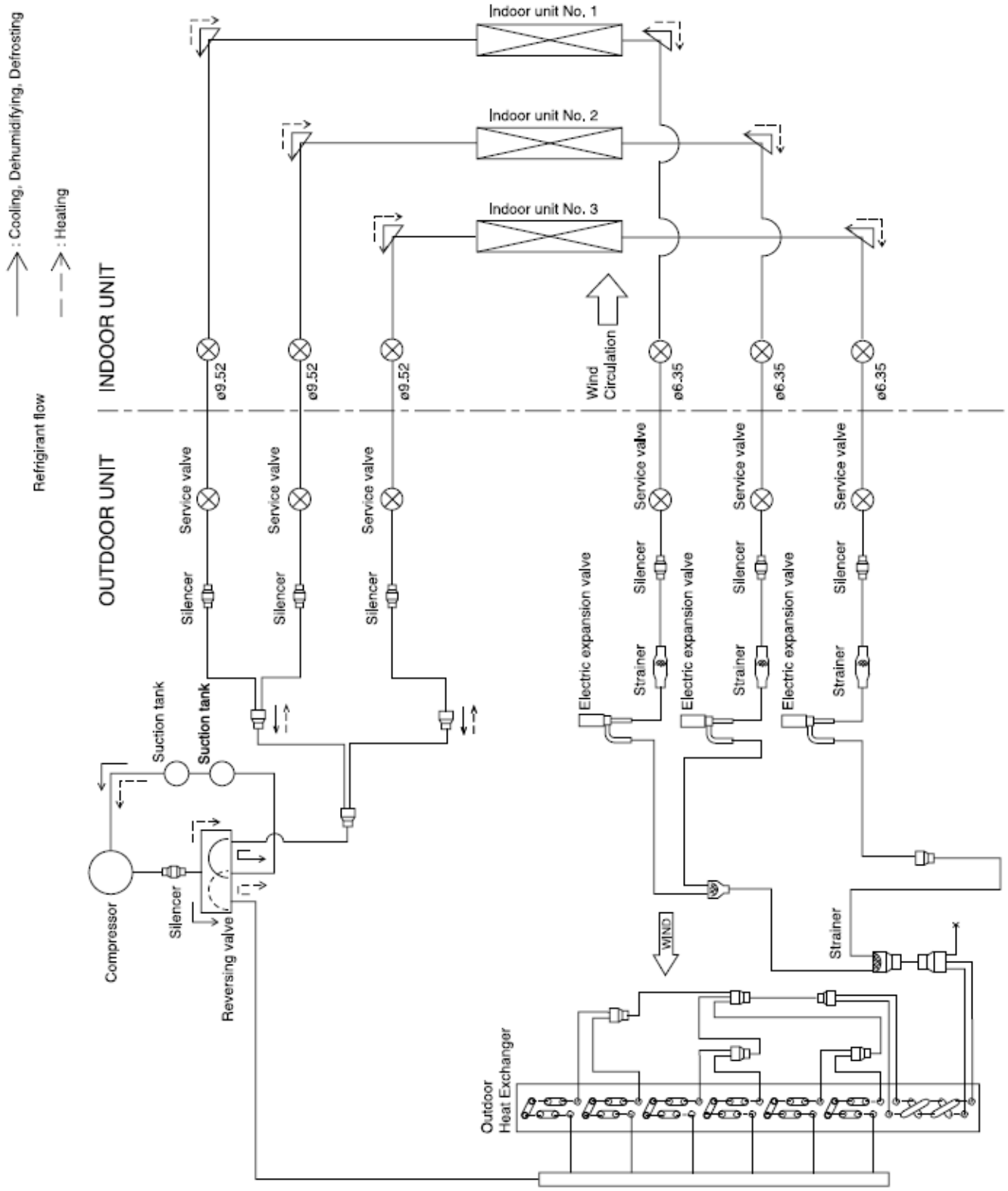

8.2.7. 4 ROOMS MULTIZONE: RAM-70NP4A

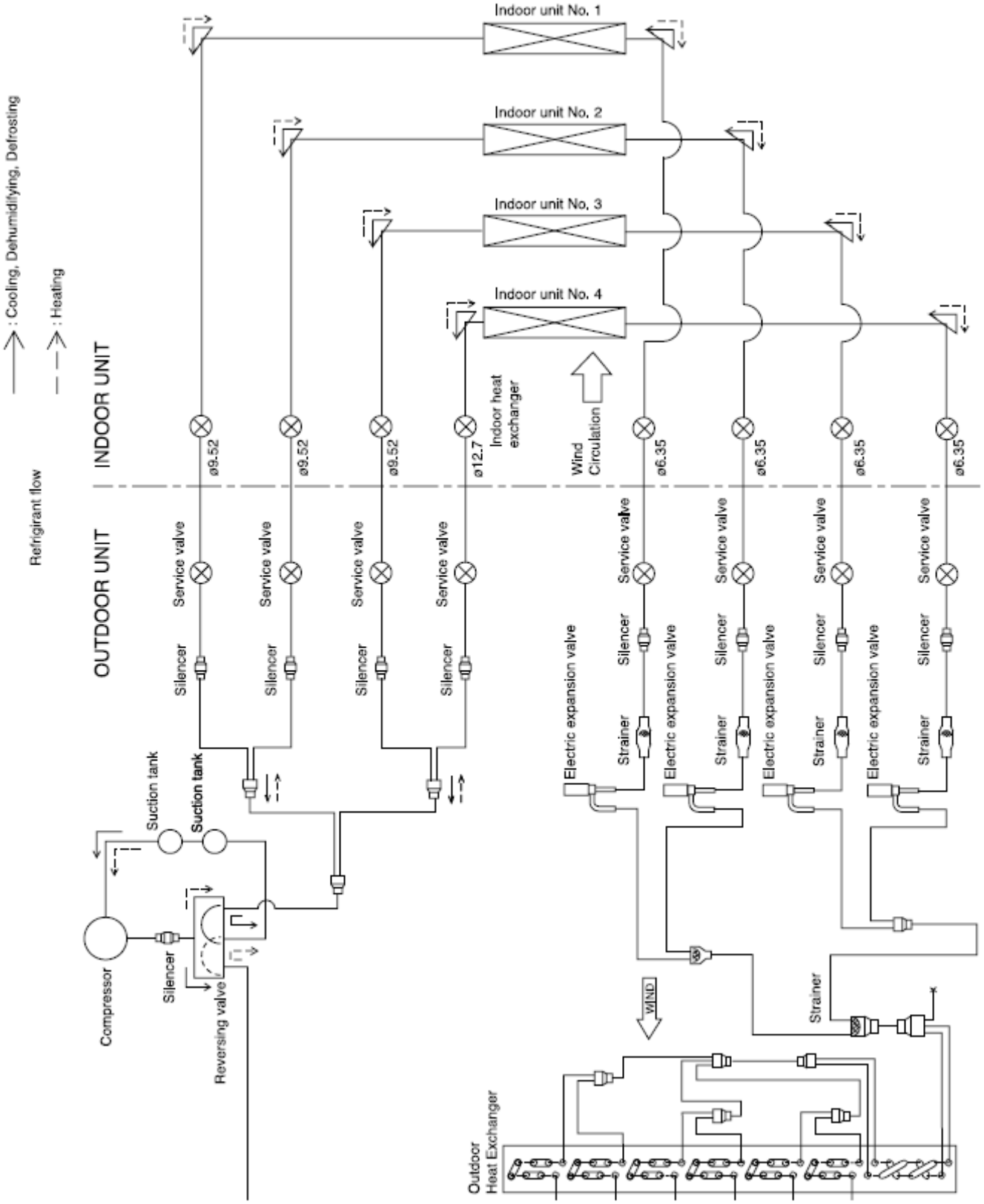

8.2.8. 5 ROOMS MULTIZONE: RAM-90NP5A

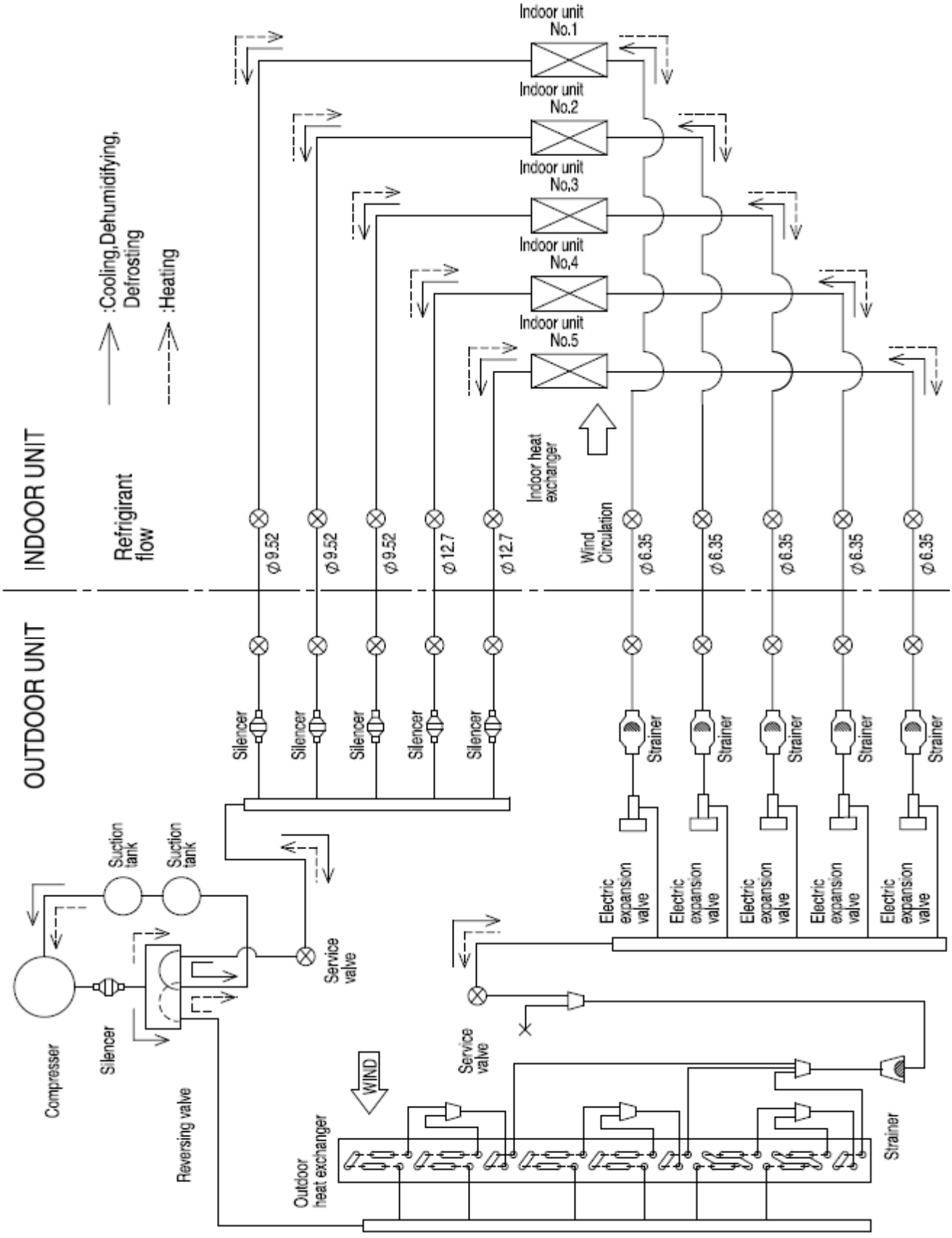

8.2.9. 6 ROOMS MULTIZONE: RAM-130NP6A

Cooling, Dehumidifying, Defrosting

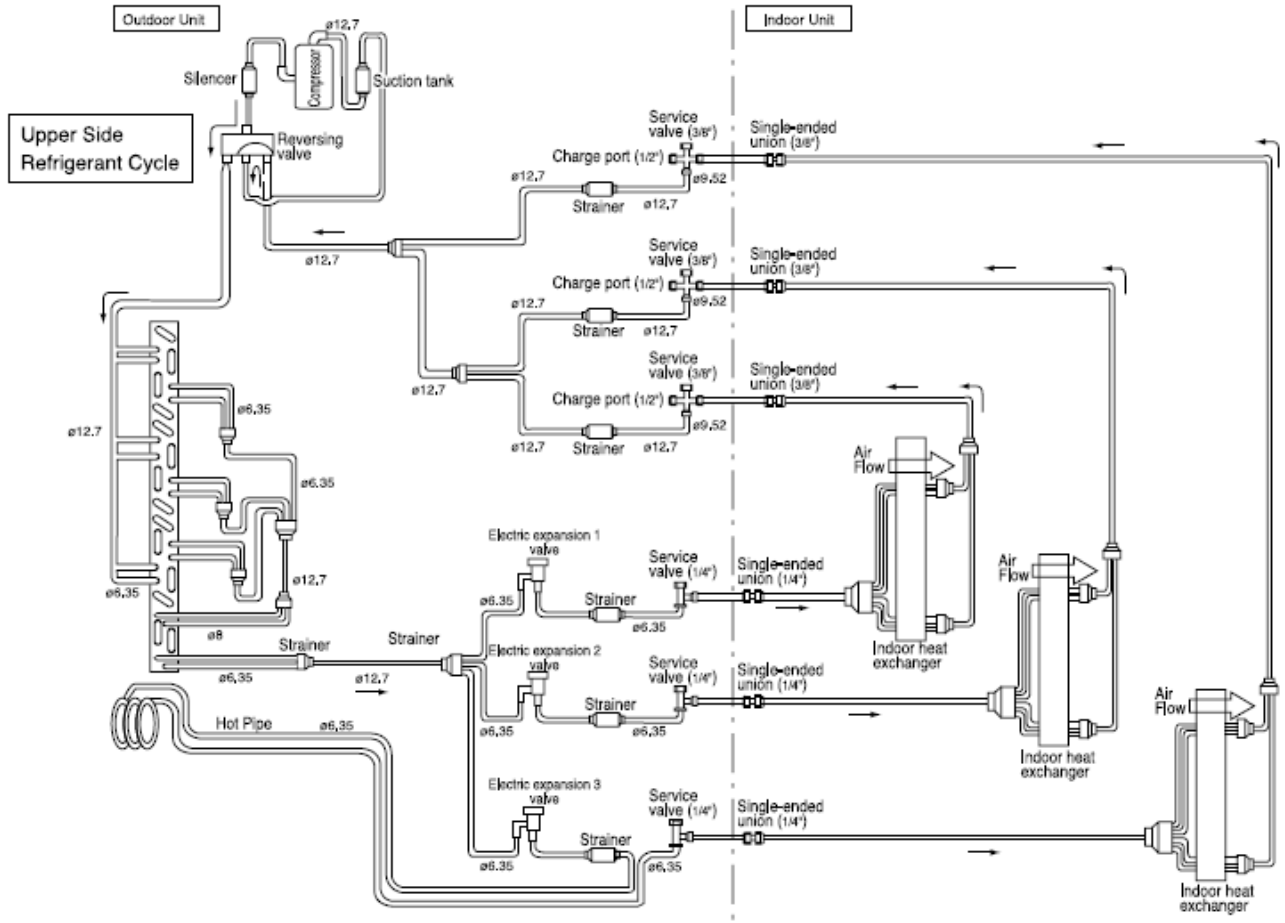

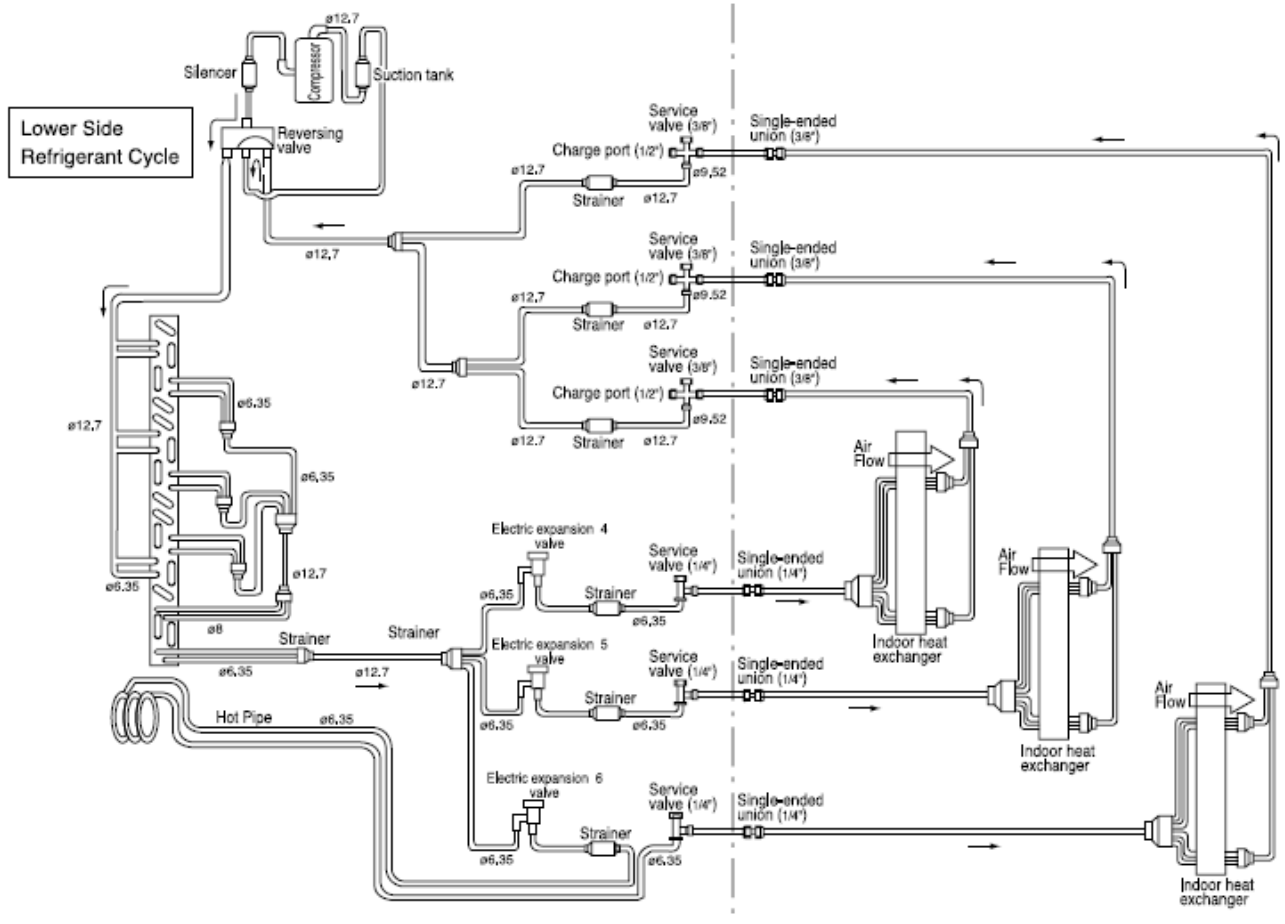

Heating

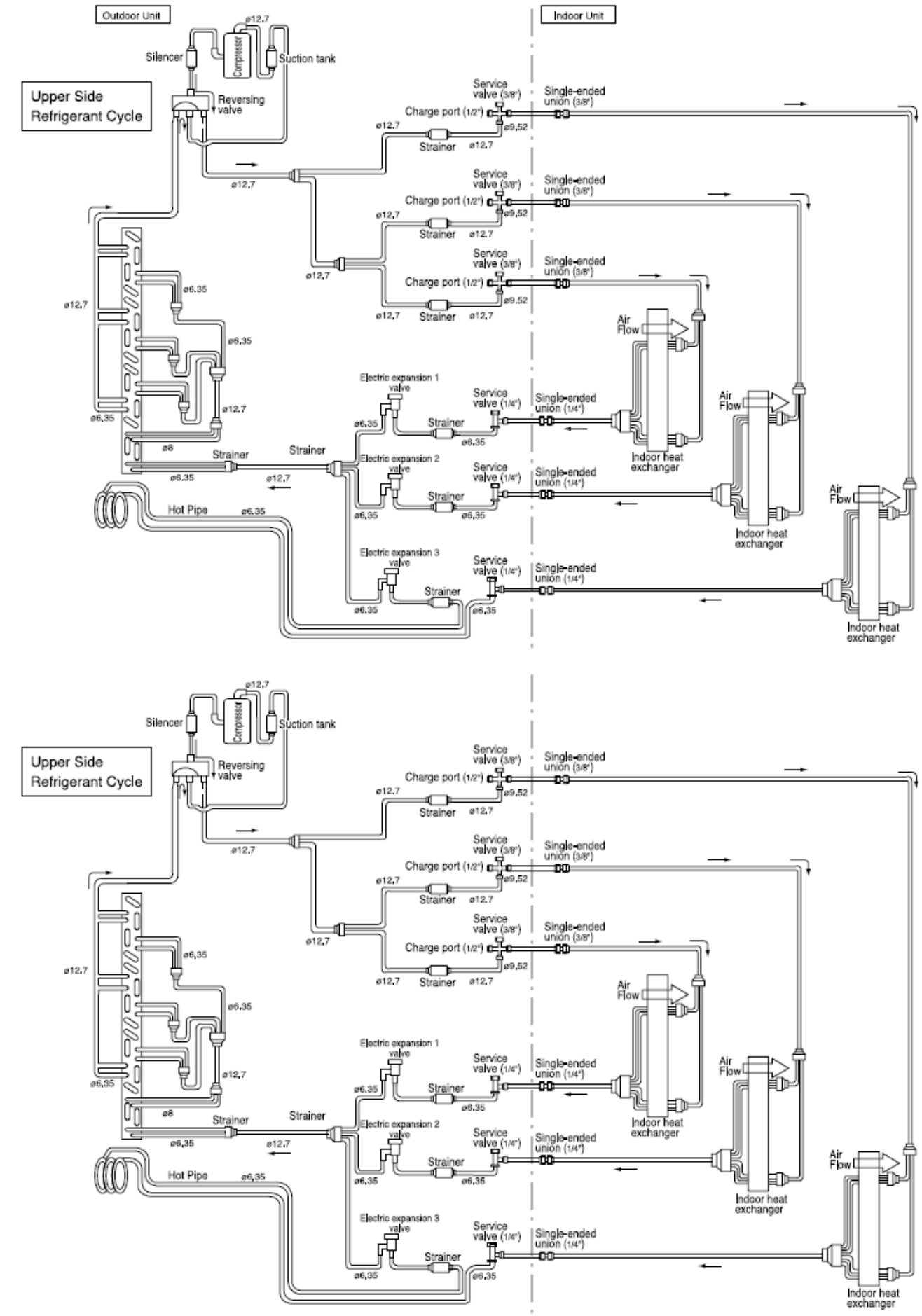
Outdoor Unit
Indoor Unit
Upper Side Refrigerant Cycle
Silencer
Compressor
Suction tank
Reversing valve
Service valve (3/8")
Charge port (1/2")
Single-ended union (3/8")
Strainer
Electric expansion 1 valve
Electric expansion 2 valve
Electric expansion 3 valve
Service valve (1/4")
Single-ended union (1/4")
Air Flow
Indoor heat exchanger
Hot Pipe
ø12.7
ø9.52
ø6.35
ø8

Upper Side Refrigerant Cycle
Silencer
Compressor
Suction tank
Reversing valve
Service valve (3/8")
Charge port (1/2")
Single-ended union (3/8")
Strainer
Electric expansion 1 valve
Electric expansion 2 valve
Electric expansion 3 valve
Service valve (1/4")
Single-ended union (1/4")
Air Flow
Indoor heat exchanger
Hot Pipe
ø12.7
ø9.52
ø6.35
ø8

8.3. MONO SPLIT

8.3.1. WALL TYPE: RAK-18PSA/25PSA/35PSA / RAC-18WSA/25WSA/35WSA

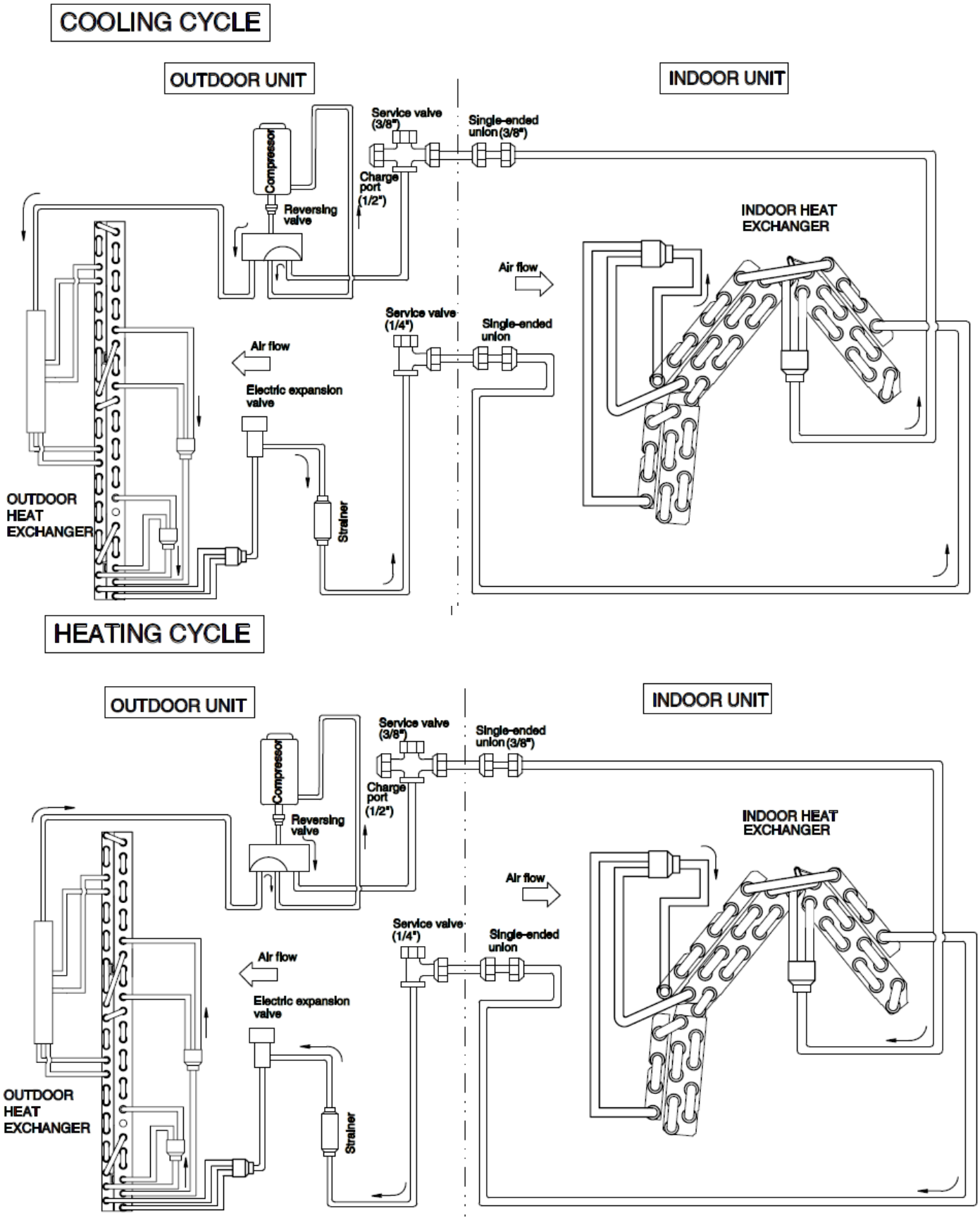

8.3.2. WALL TYPE: RAK-18PSAN/25PSAN/35PSAN / RAC-18WSAN/25WSAN/35WSAN

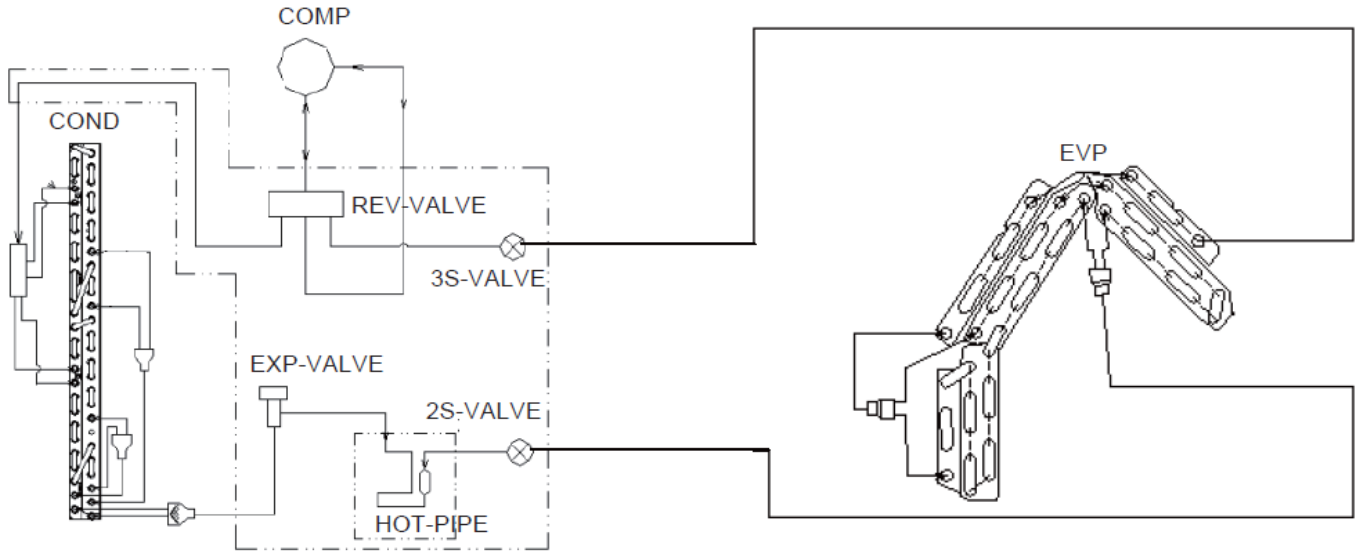

8.3.3. WALL TYPE: RAK-18PSPA/25PSPA/35PSPA / RAC-18WSPA/25WSPA/35WSPA

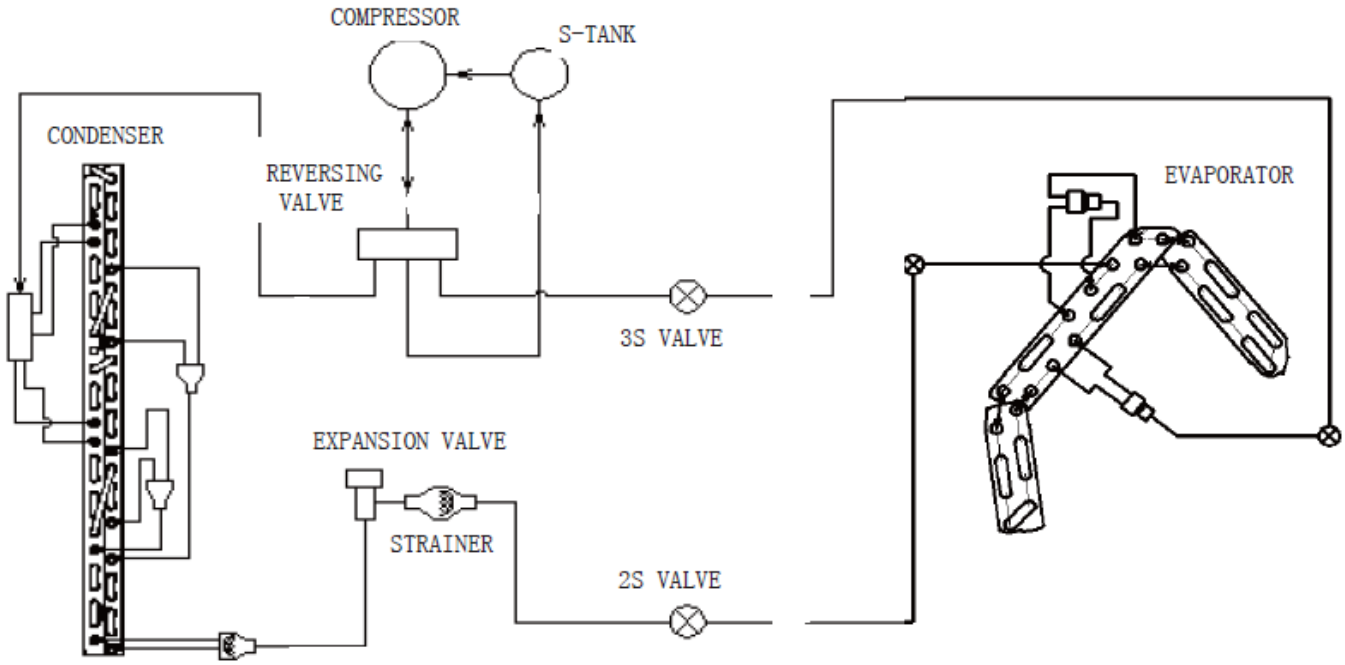

8.3.4. WALL TYPE: RAK-25PXA / RAC-25WXA

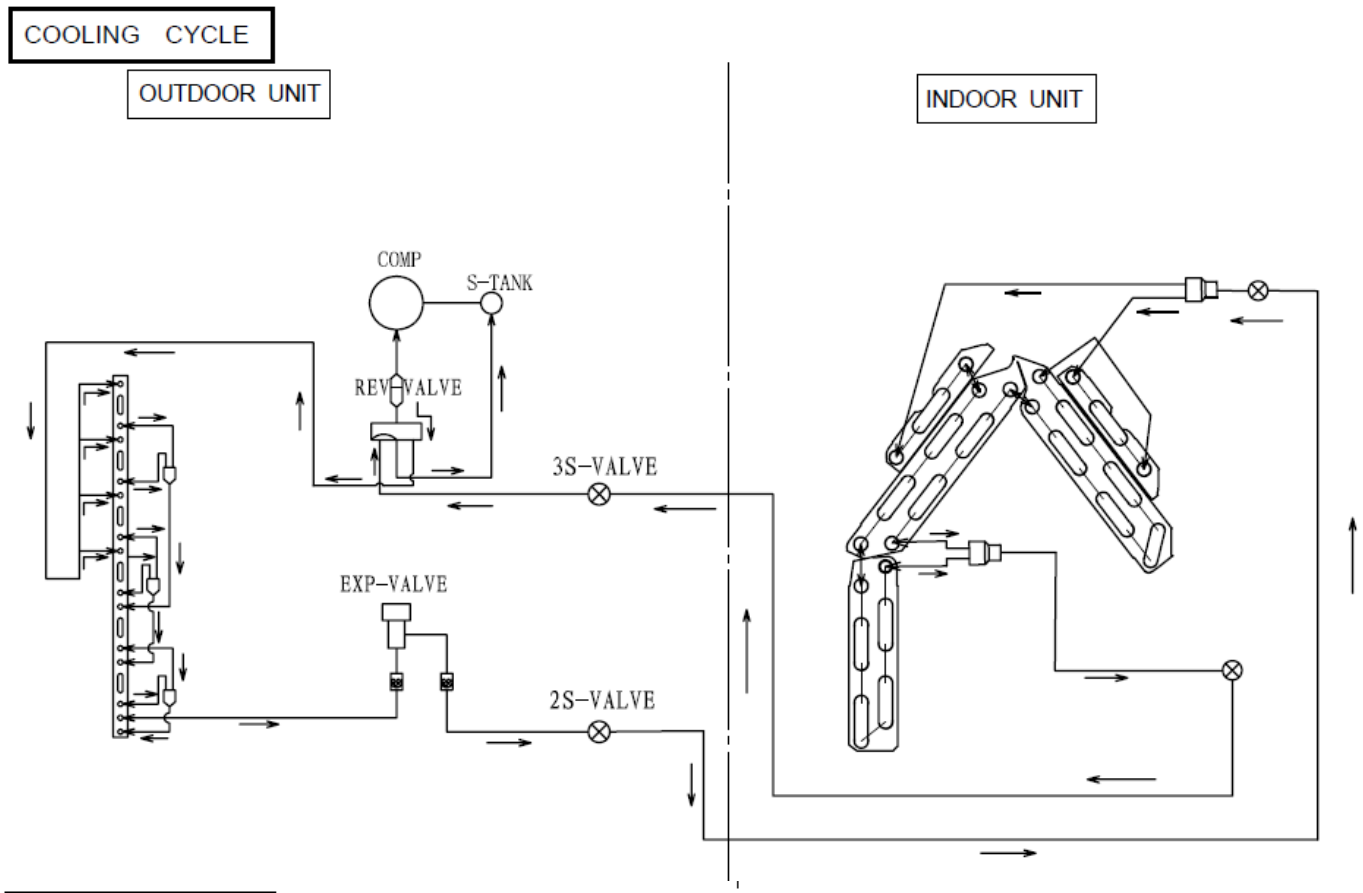

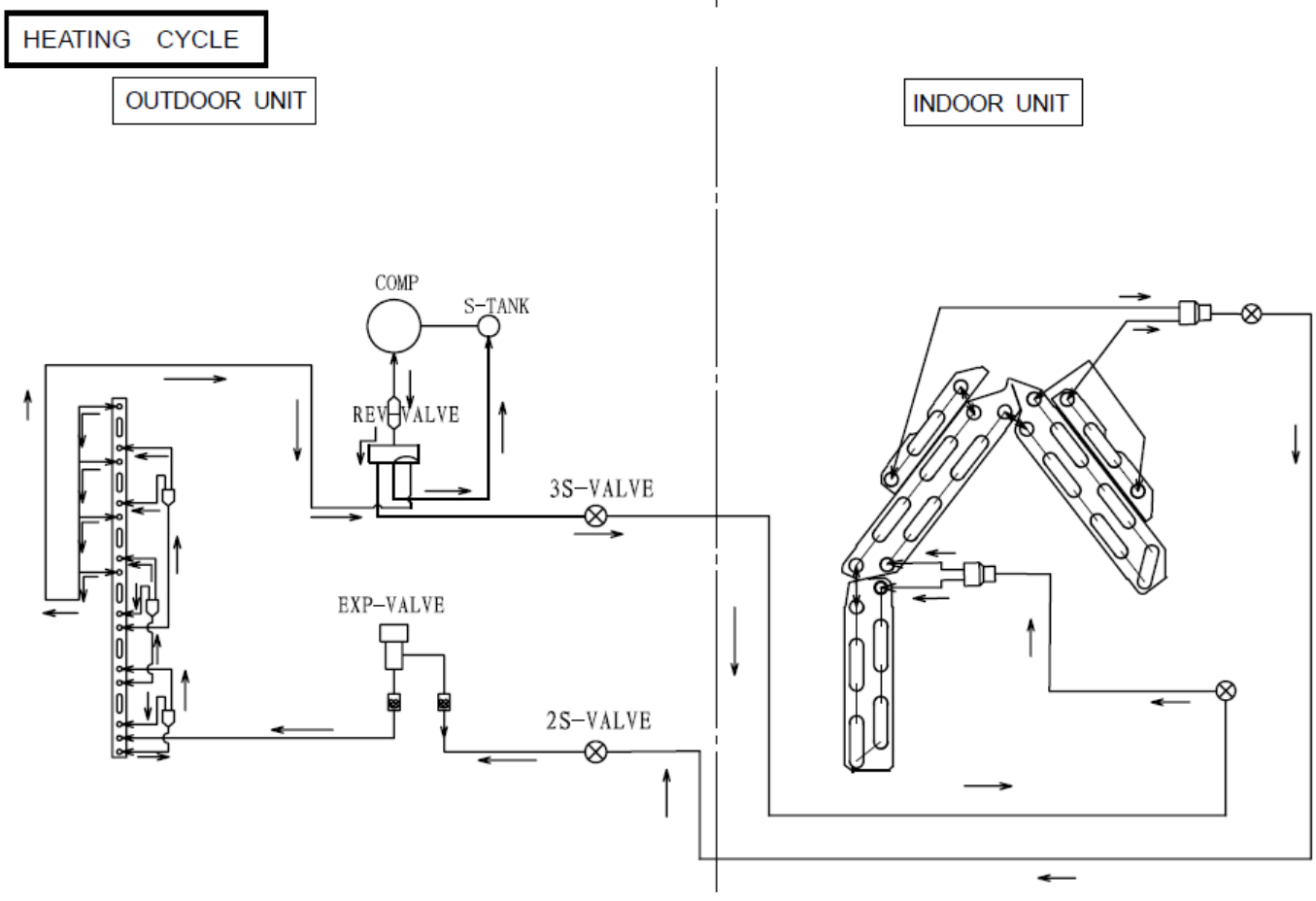

8.3.5. WALL TYPE: RAK-35PXA / RAC-35WXA

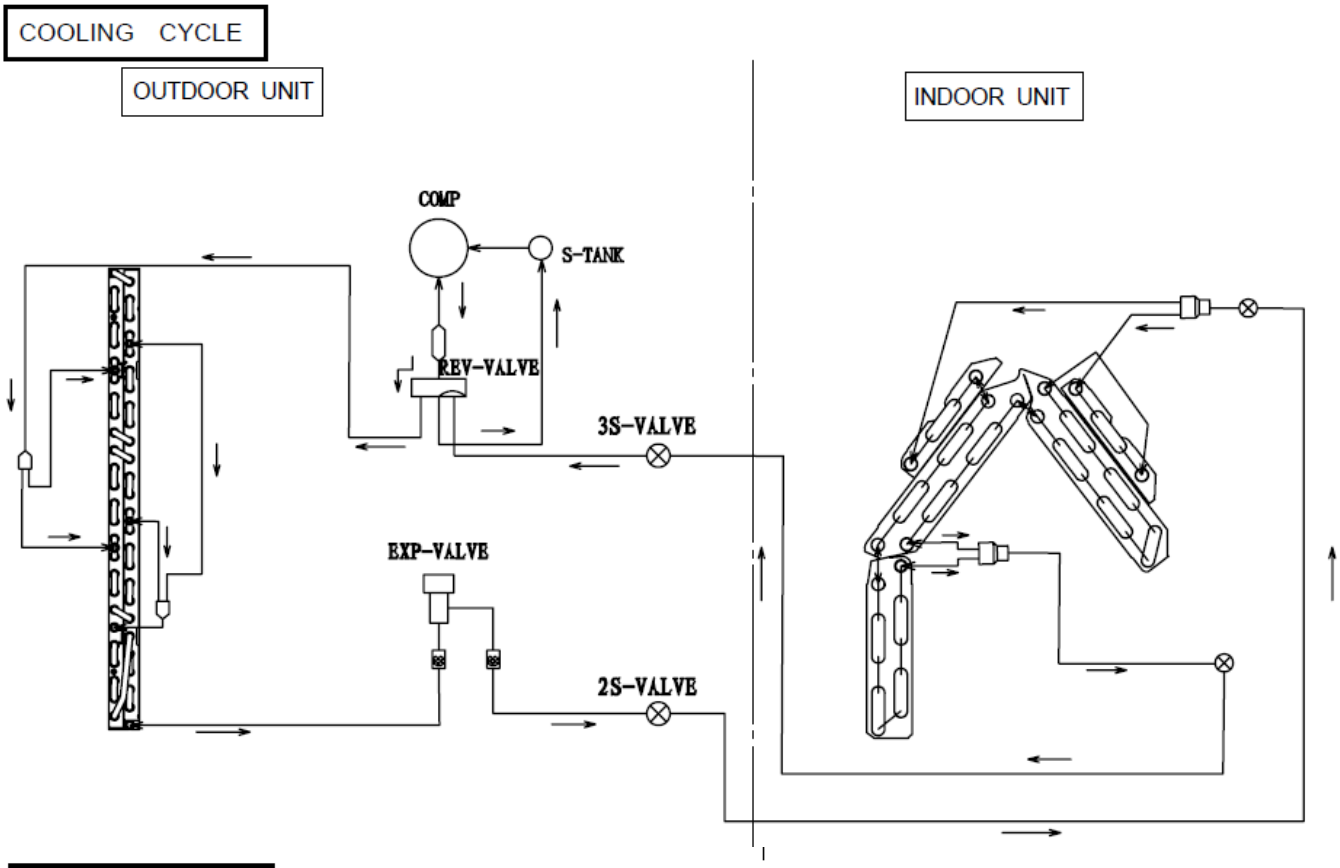

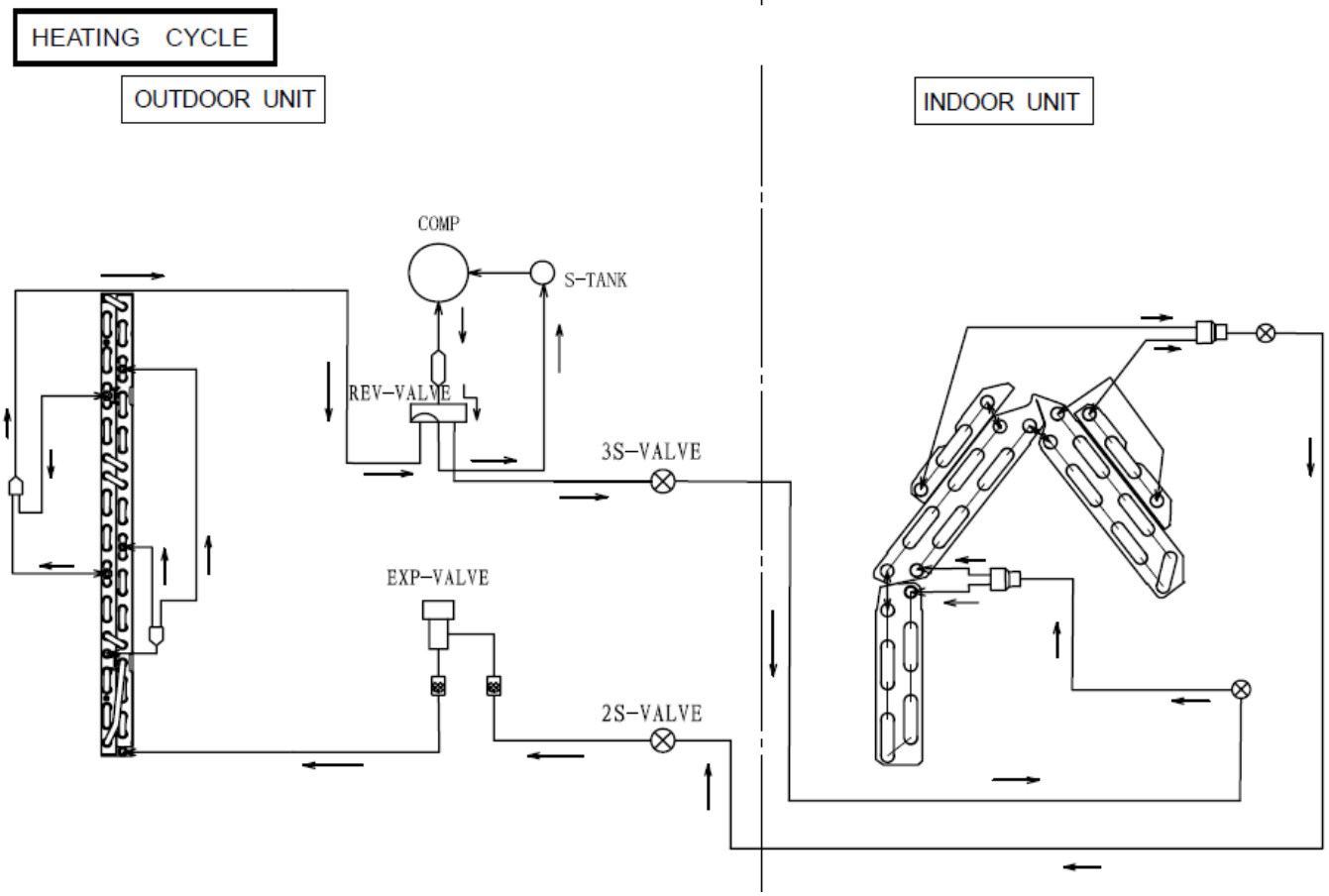

8.3.6. WALL TYPE: RAK-50PXA / RAC-50WXA

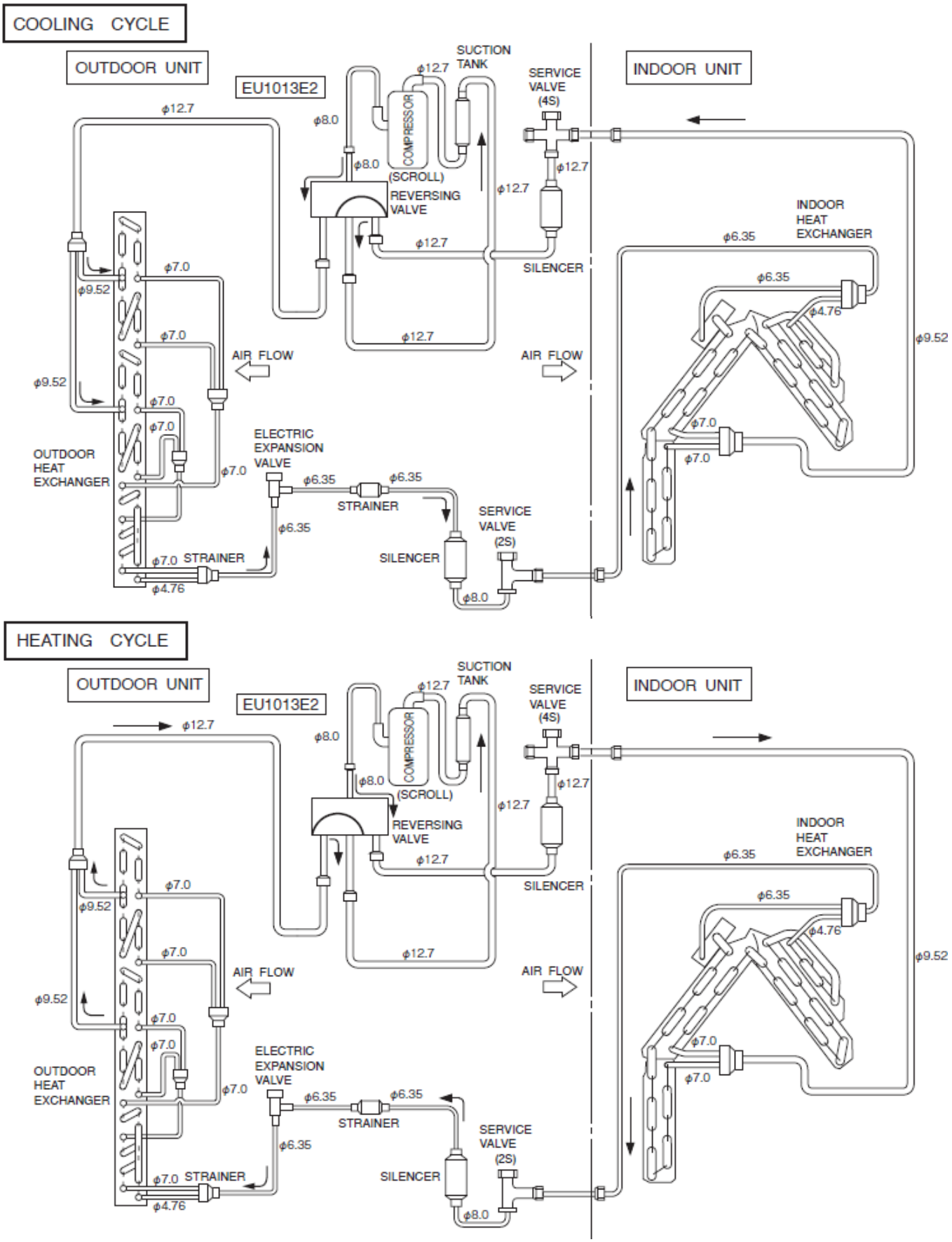

8.3.7. WALL TYPE: RAK-18PPA/25PPA / RAC-18WPA/25WPA

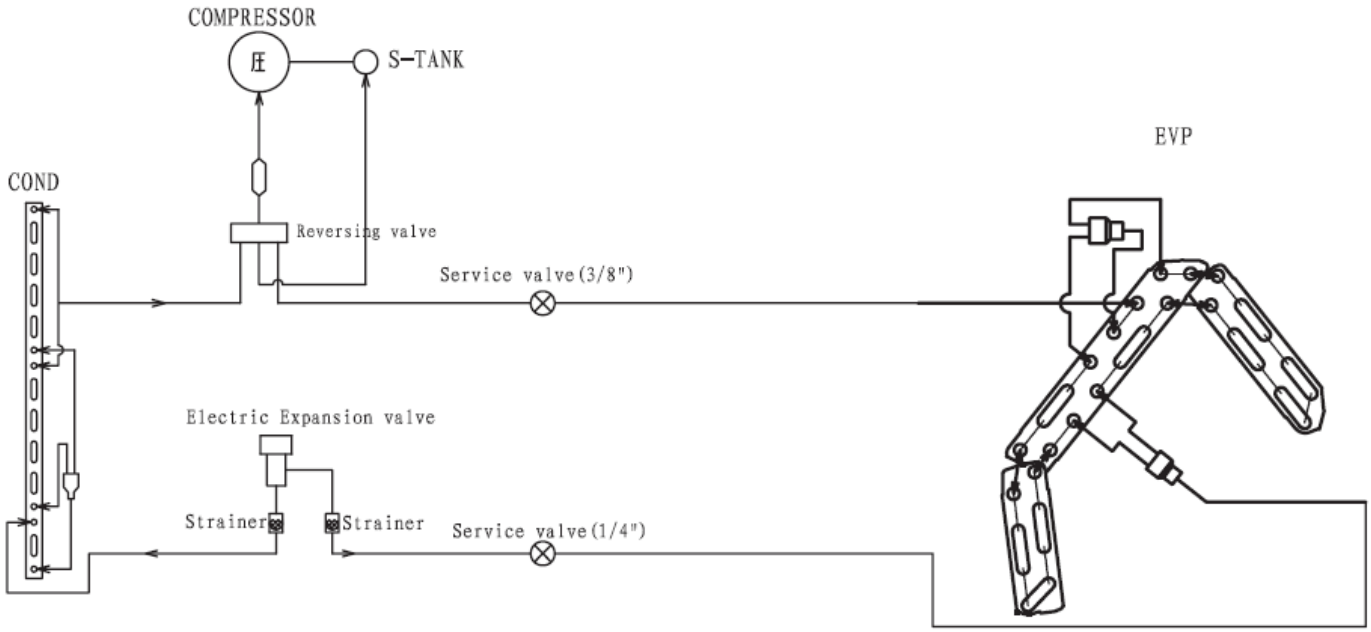

8.3.8. WALL TYPE: RAK-35PPA / RAC-35WPA

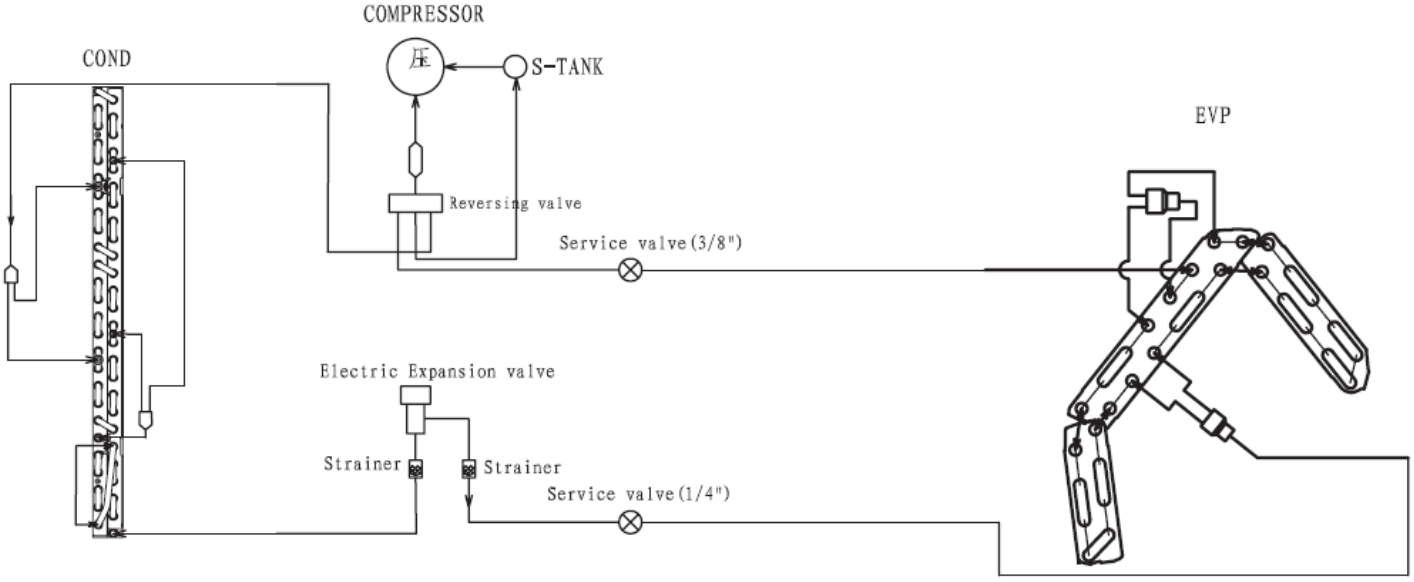

8.3.9. WALL TYPE: RAK-50PPA / RAC-50WPA

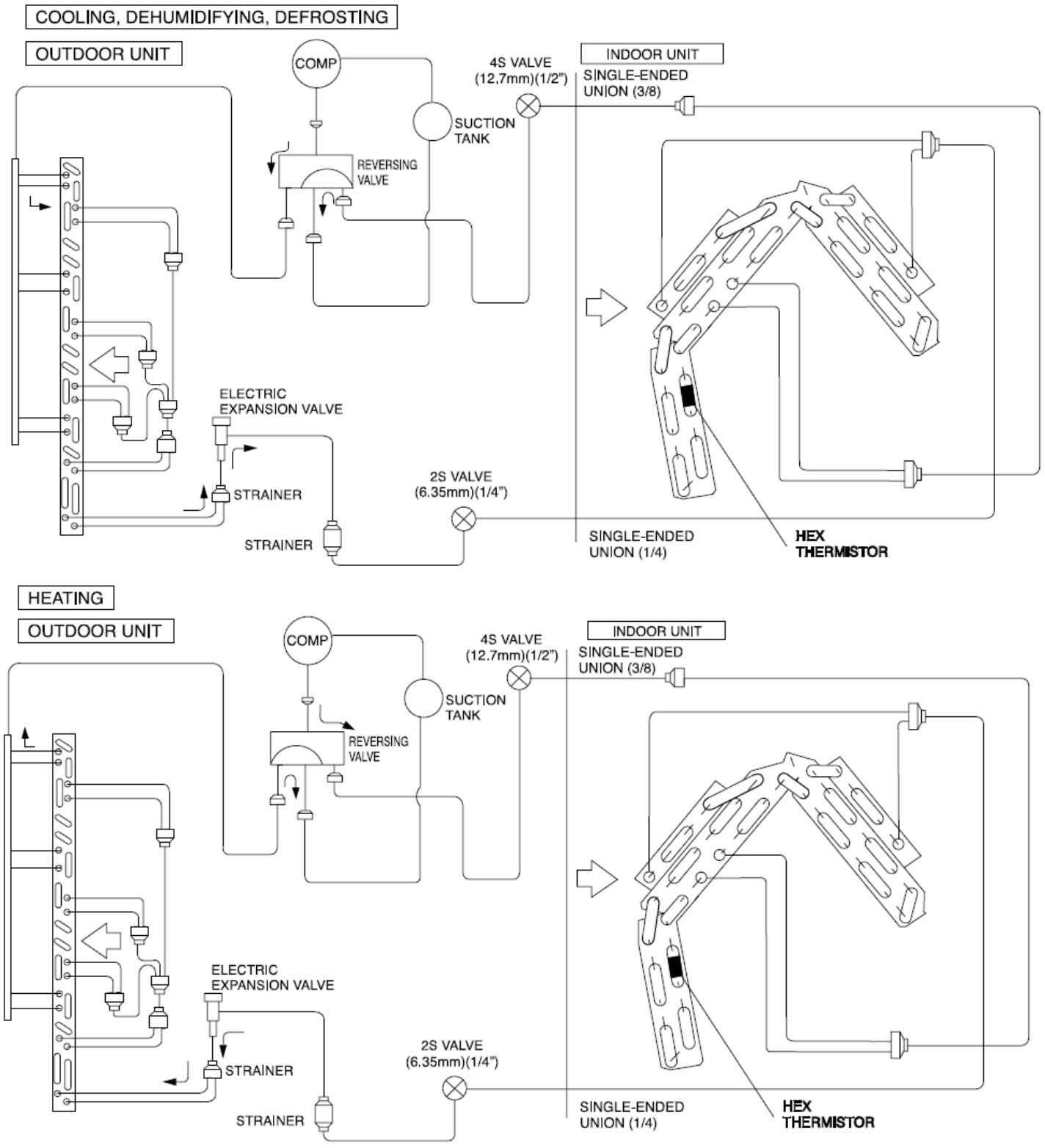

8.3.10. WALL TYPE: RAK-60PPA / RAC-60WPA

COOLING, DEHUMIDIFYING, DEFROSTING

OUTDOOR UNIT

INDOOR UNIT

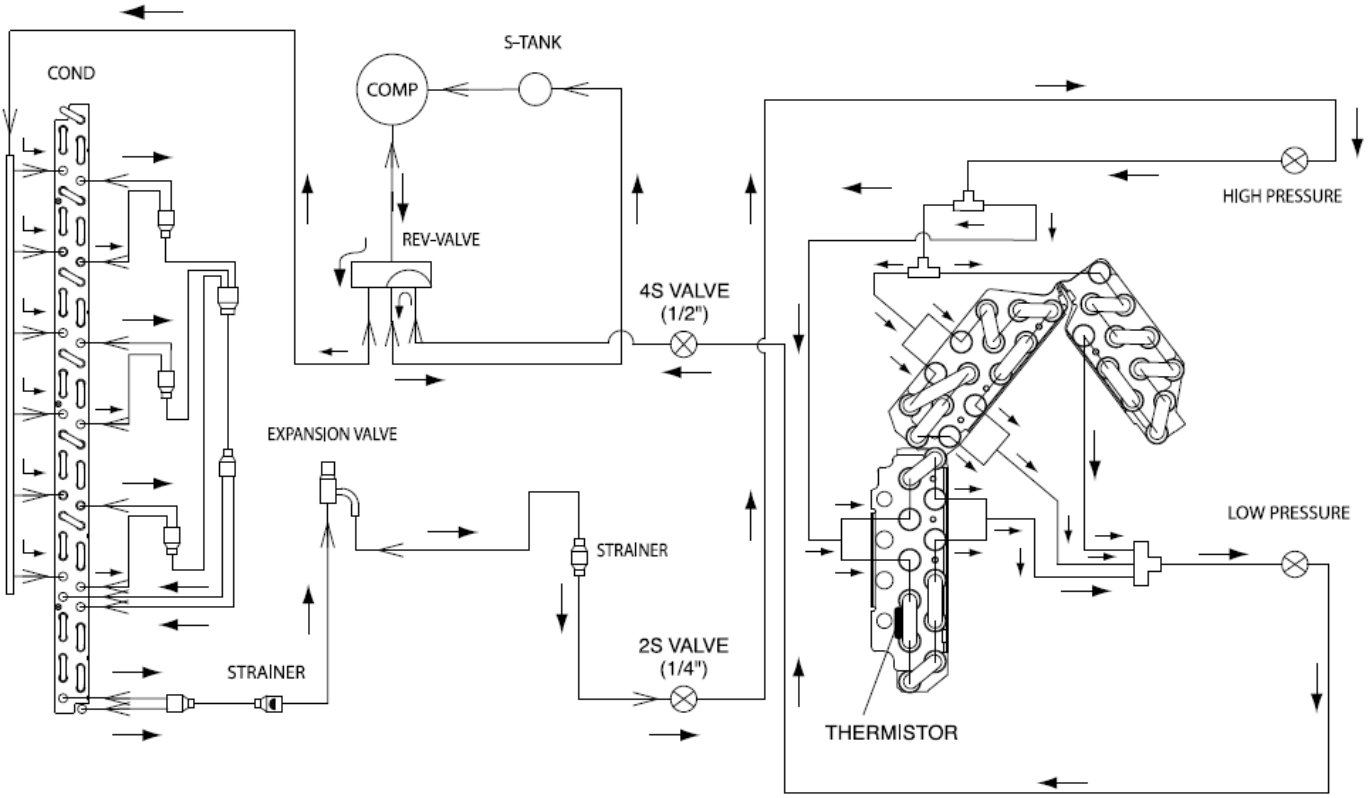

HEATING

OUTDOOR UNIT

INDOOR UNIT

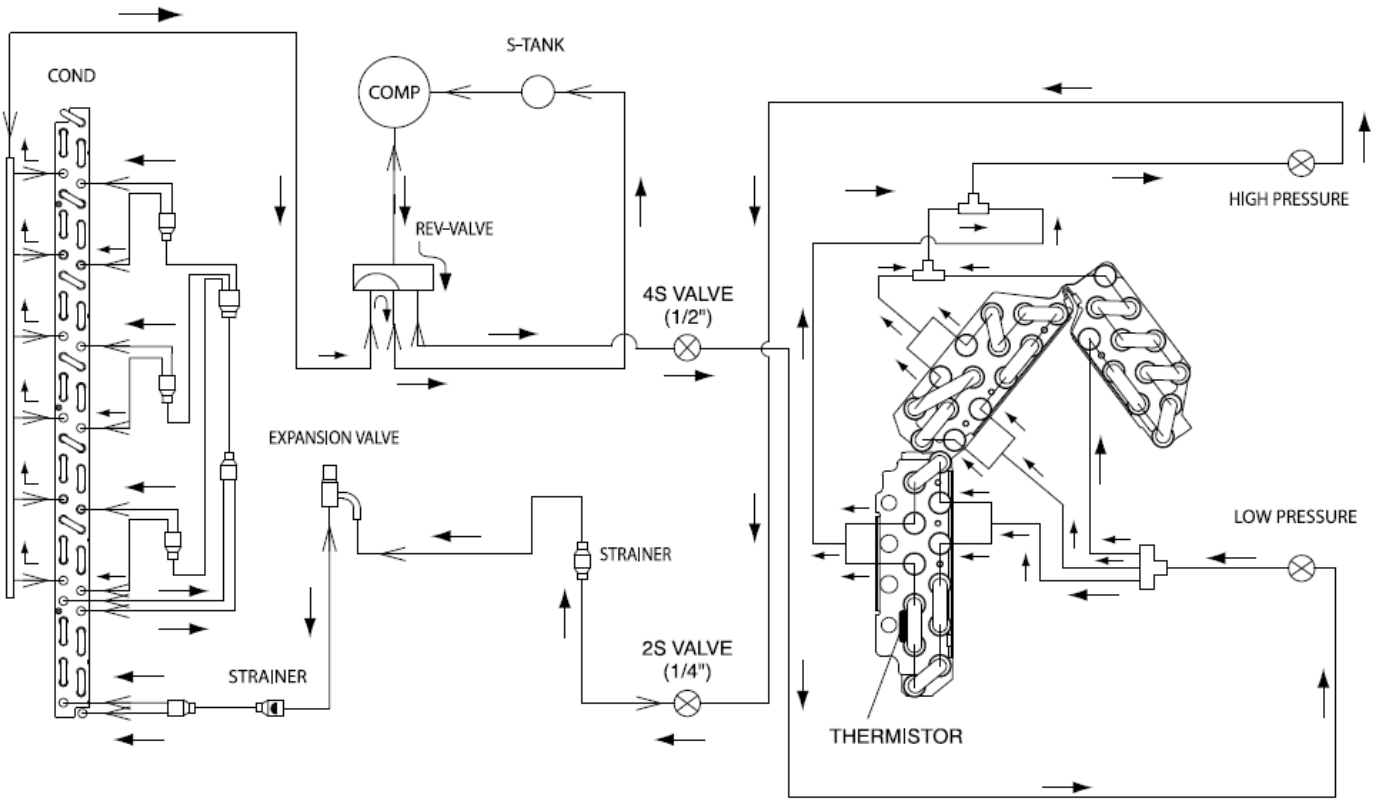

8.3.11. WALL TYPE: RAK-70PPA / RAC-70WPA

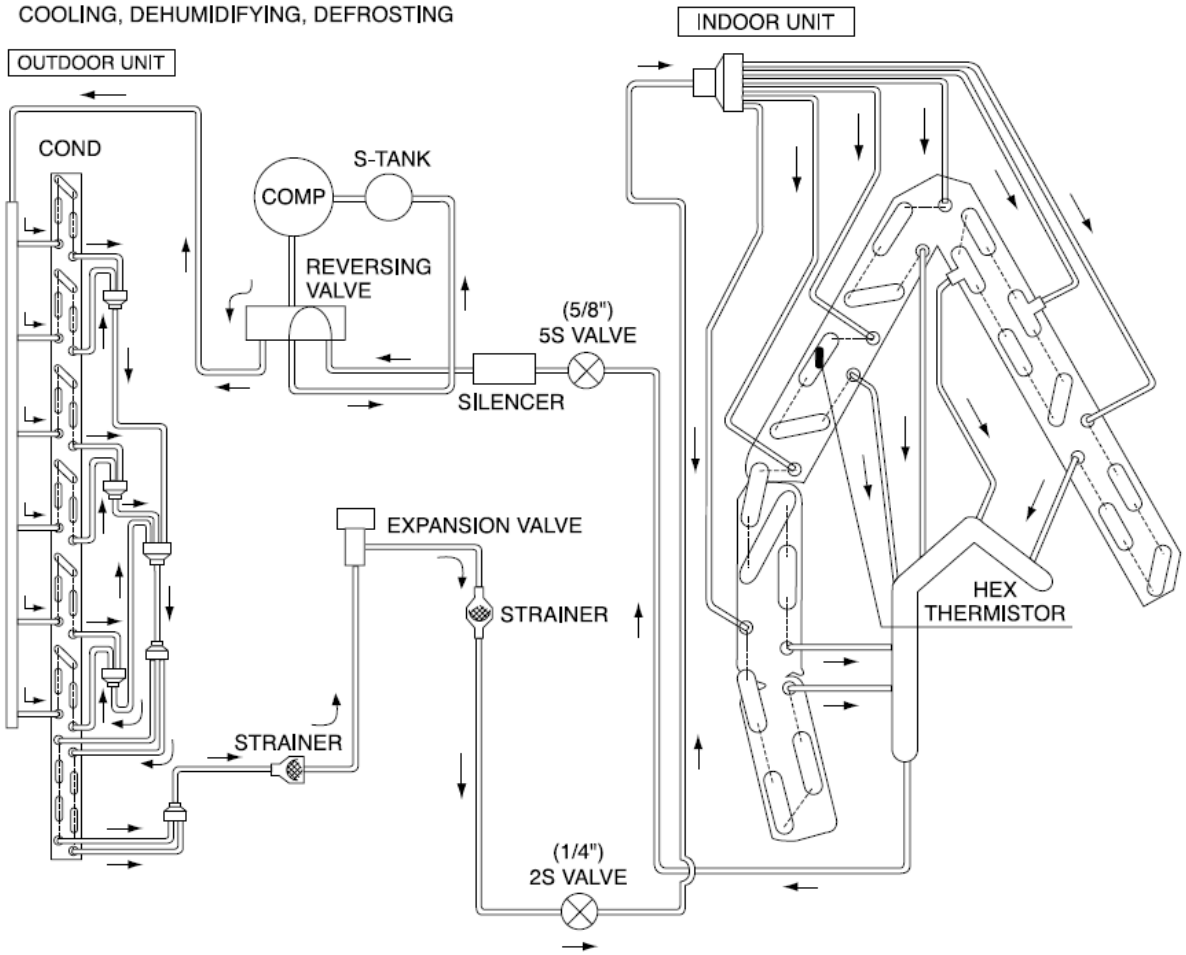

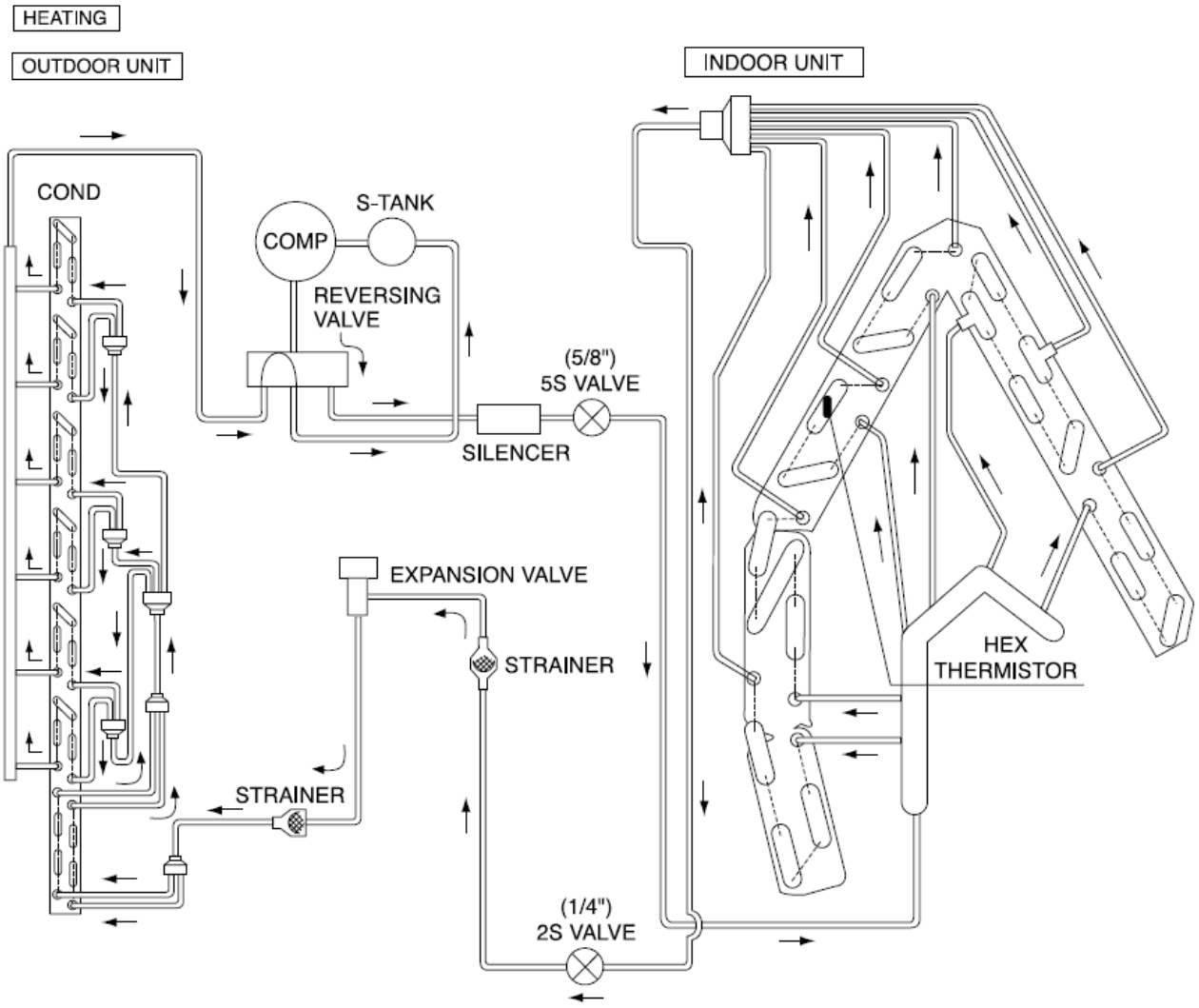

8.3.12. WALL TYPE: RAK-18PEA/25PEA / RAC-18WEA/25WEA

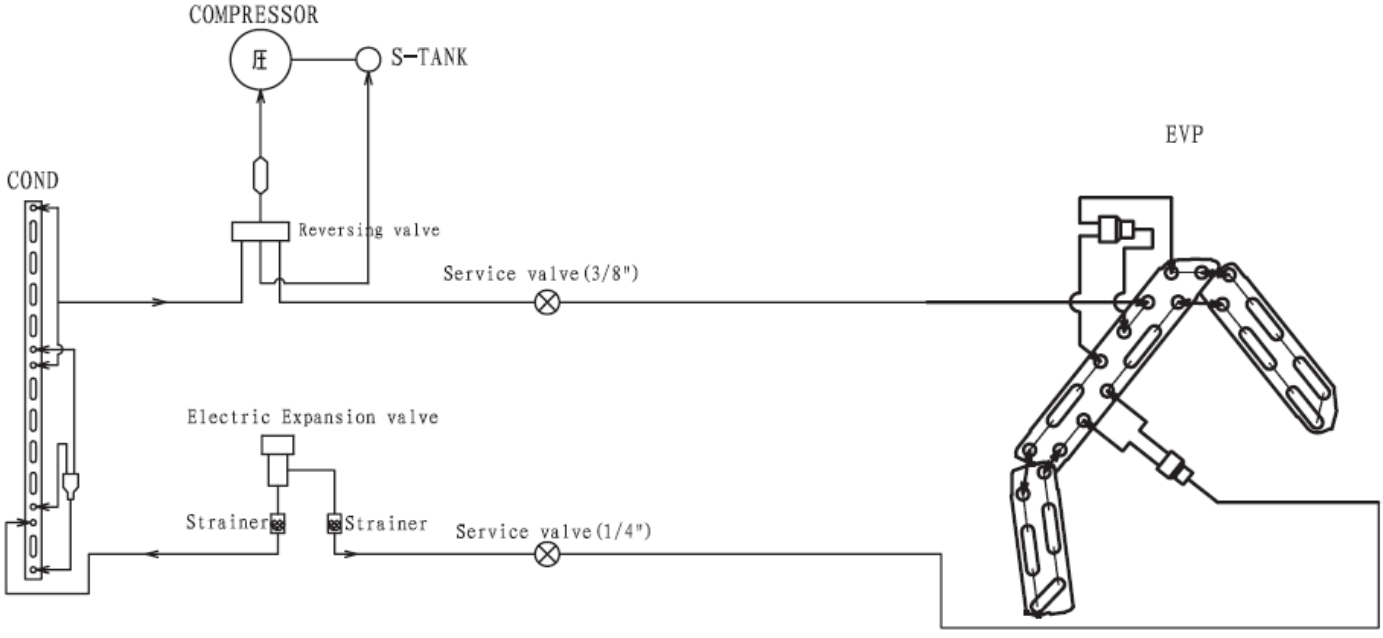

8.3.13. WALL TYPE: RAK-35PEA / RAC-35WEA

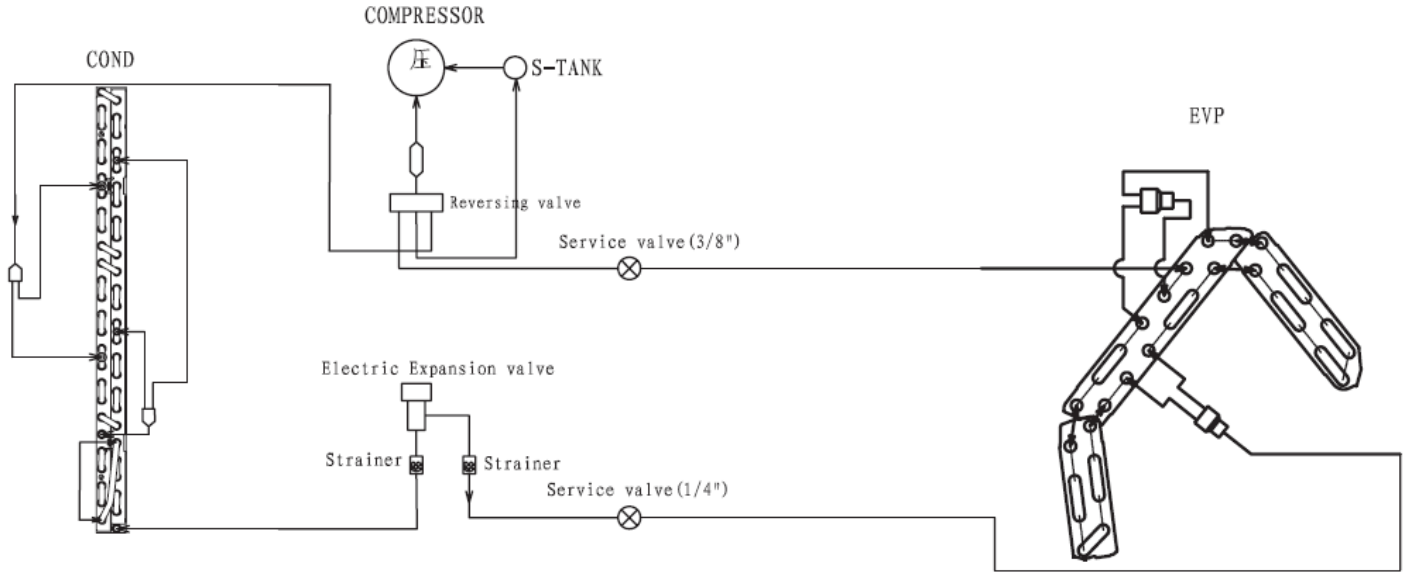

8.3.14. WALL TYPE: RAK-50PEA / RAC-50WEA

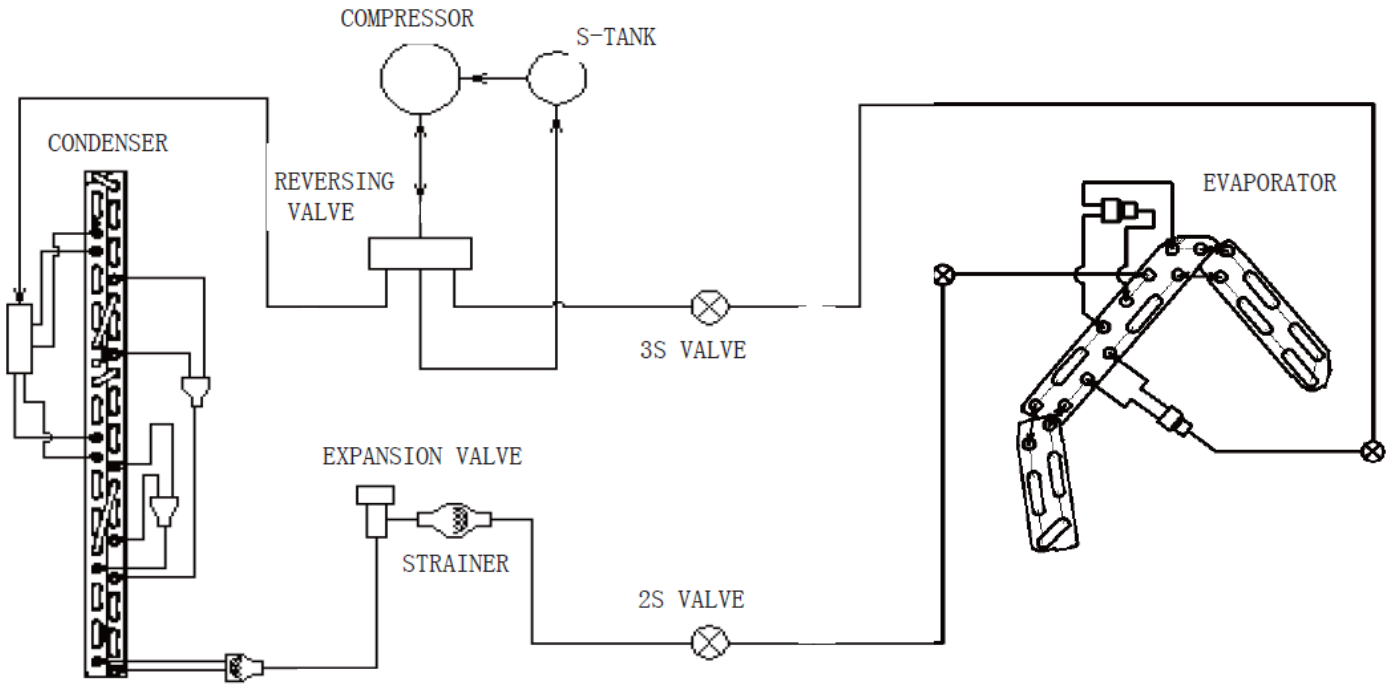

8.3.15. FLOOR TYPE: RAF-25PXA/35PXA / RAC-25FXA/35FXA

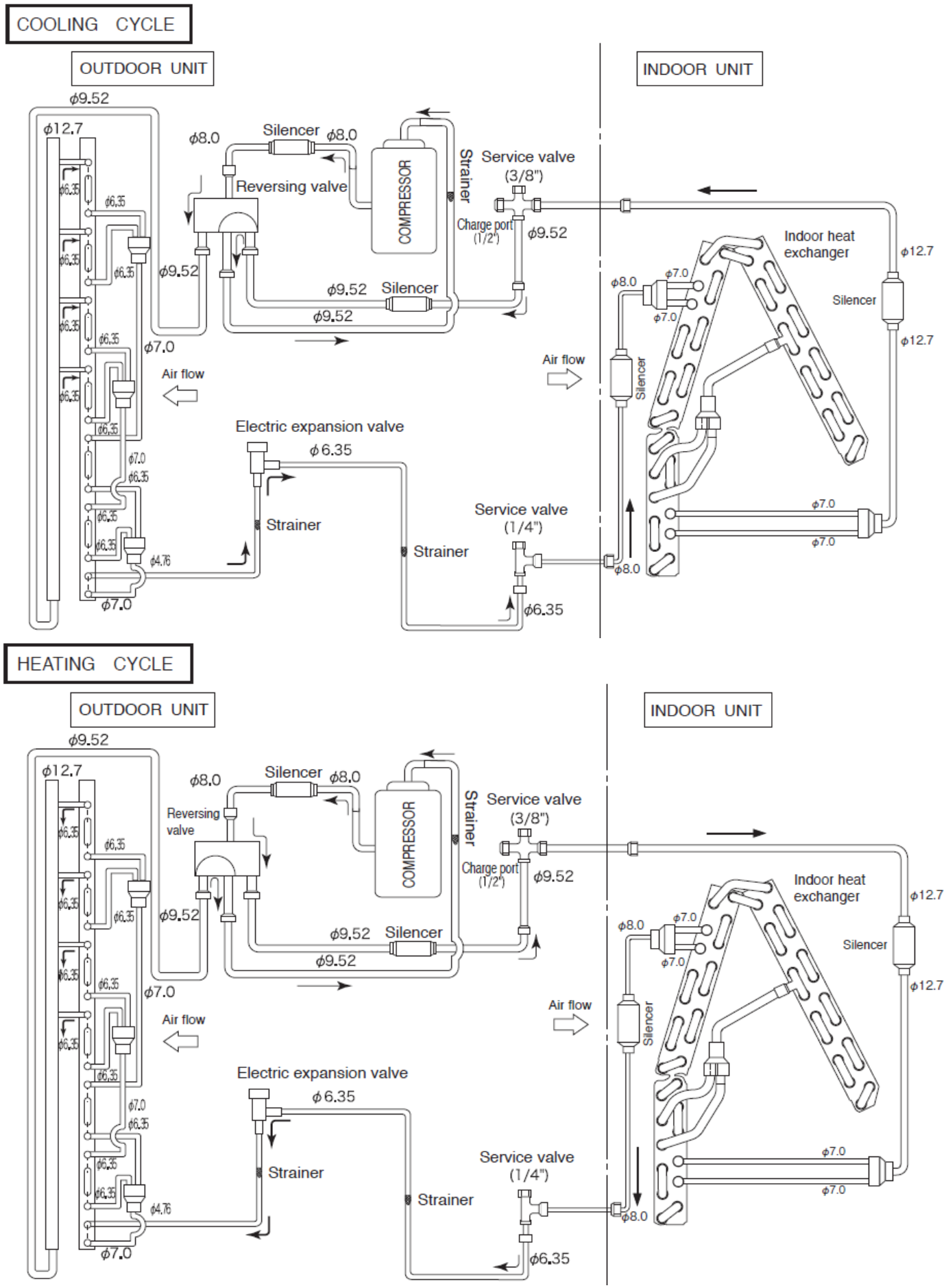

8.3.16. FLOOR TYPE: RAF-50PXA / RAC-50FXA

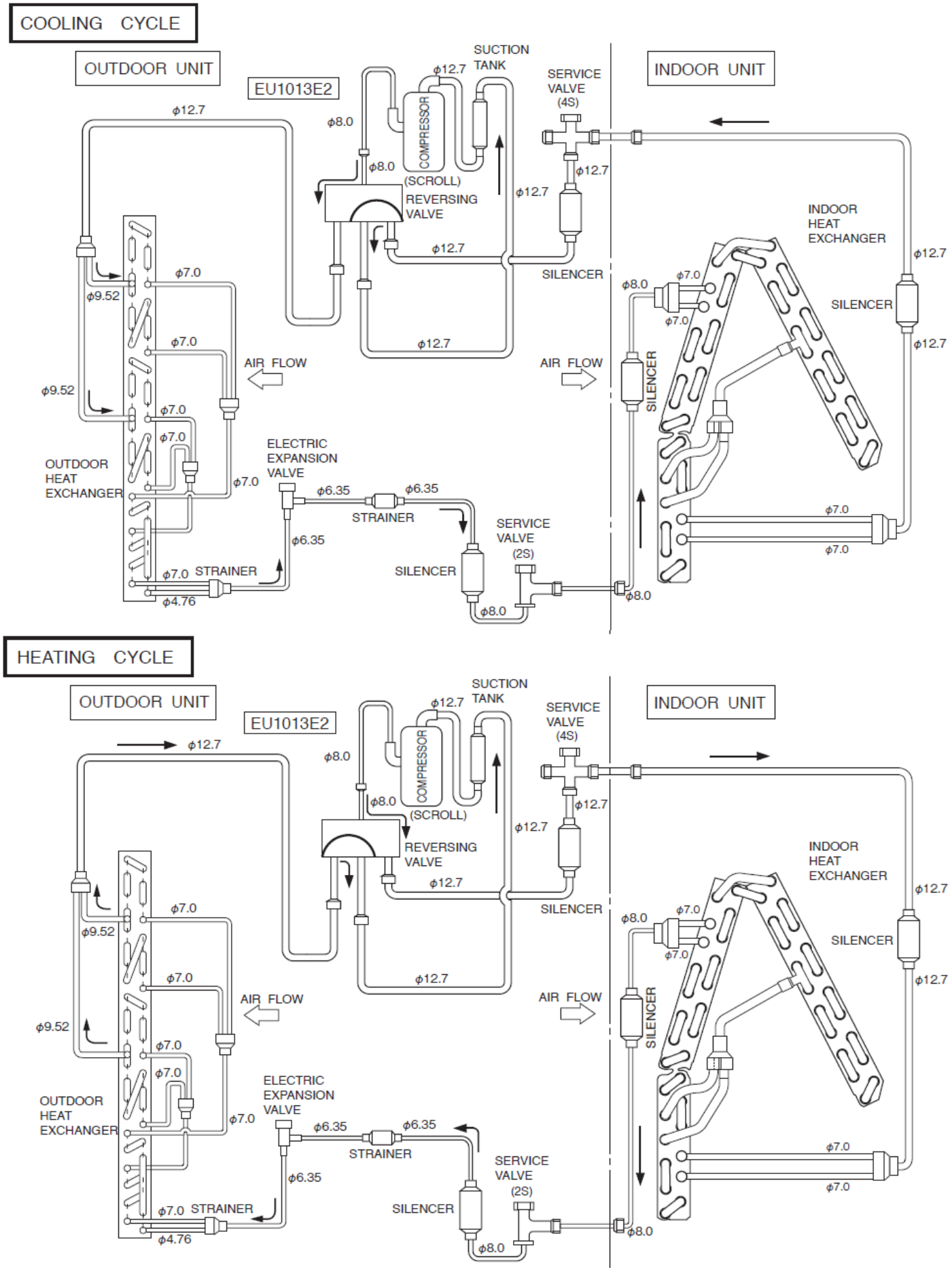

8.3.17. FLOOR TYPE: RAF-25RPA / RAC-25FPA

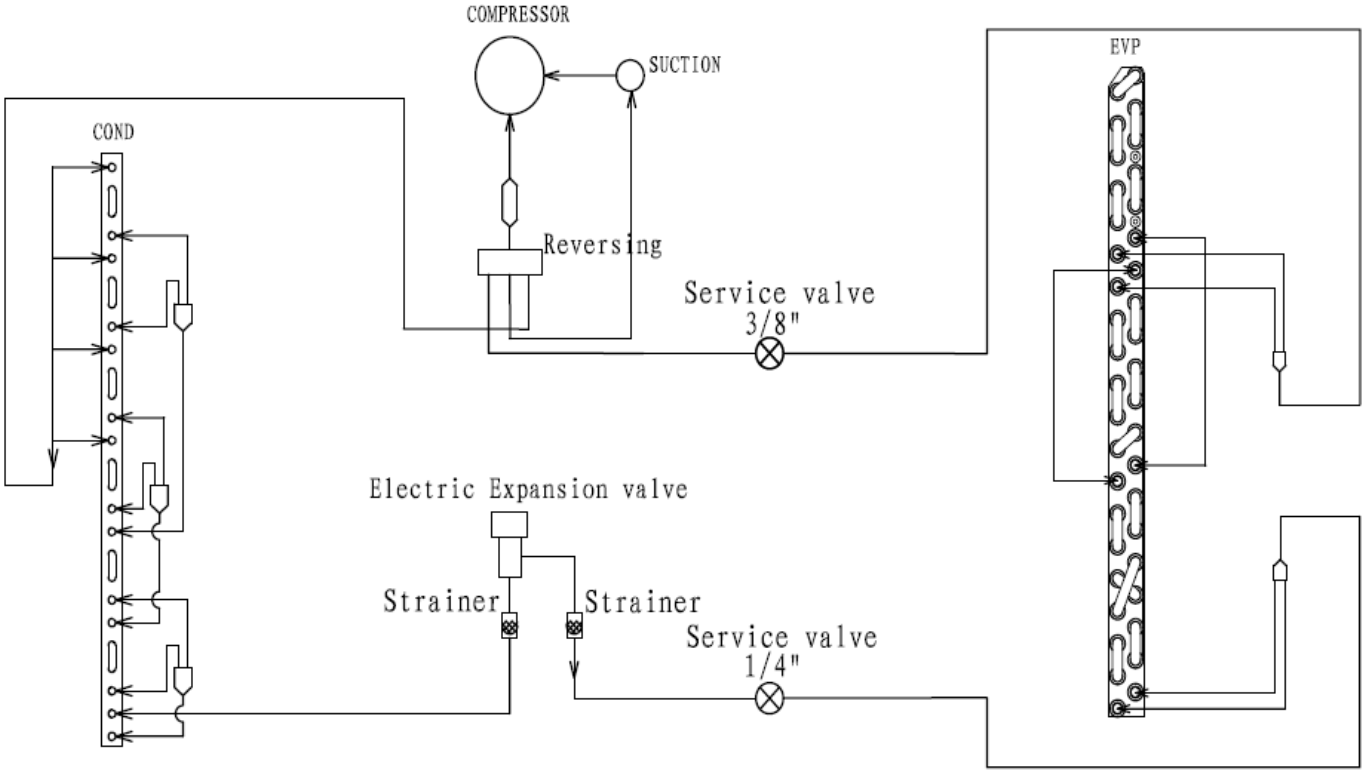

8.3.18. FLOOR TYPE: RAF-35RPA / RAC-35FPA

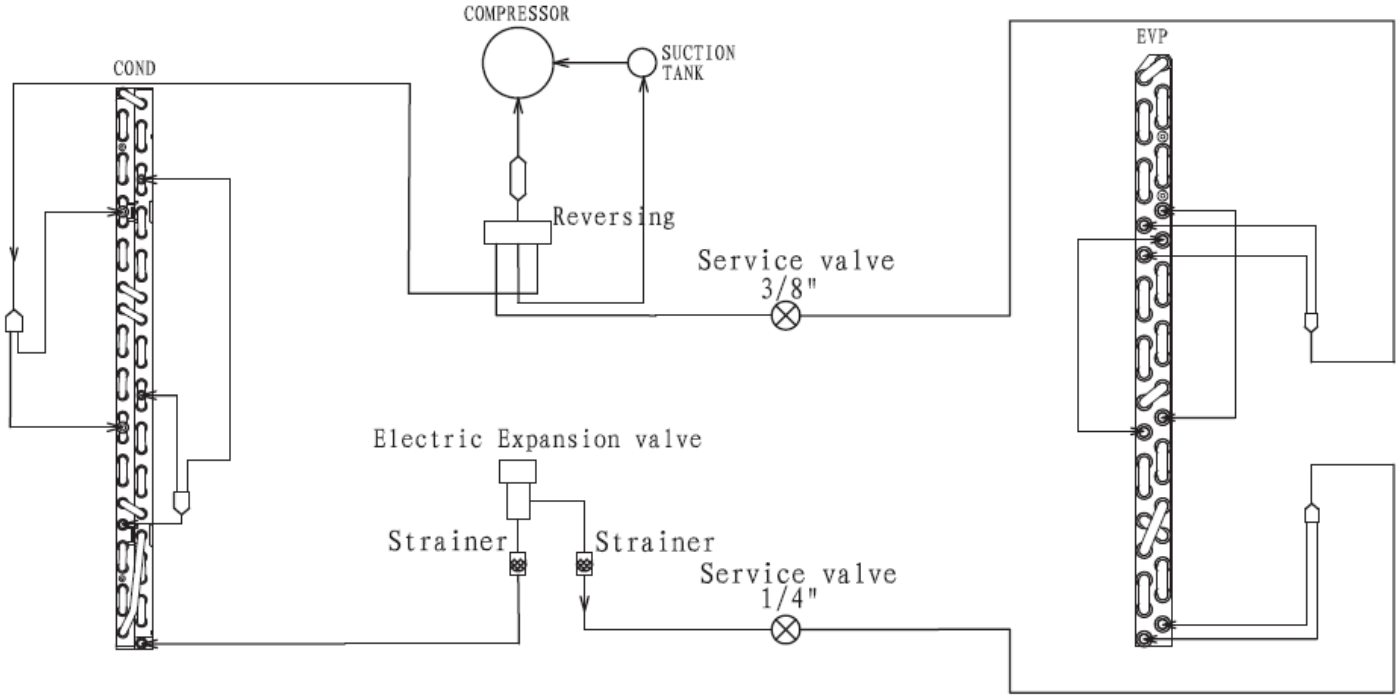

8.3.19. FLOOR TYPE: RAF-50RPA / RAC-50FPA

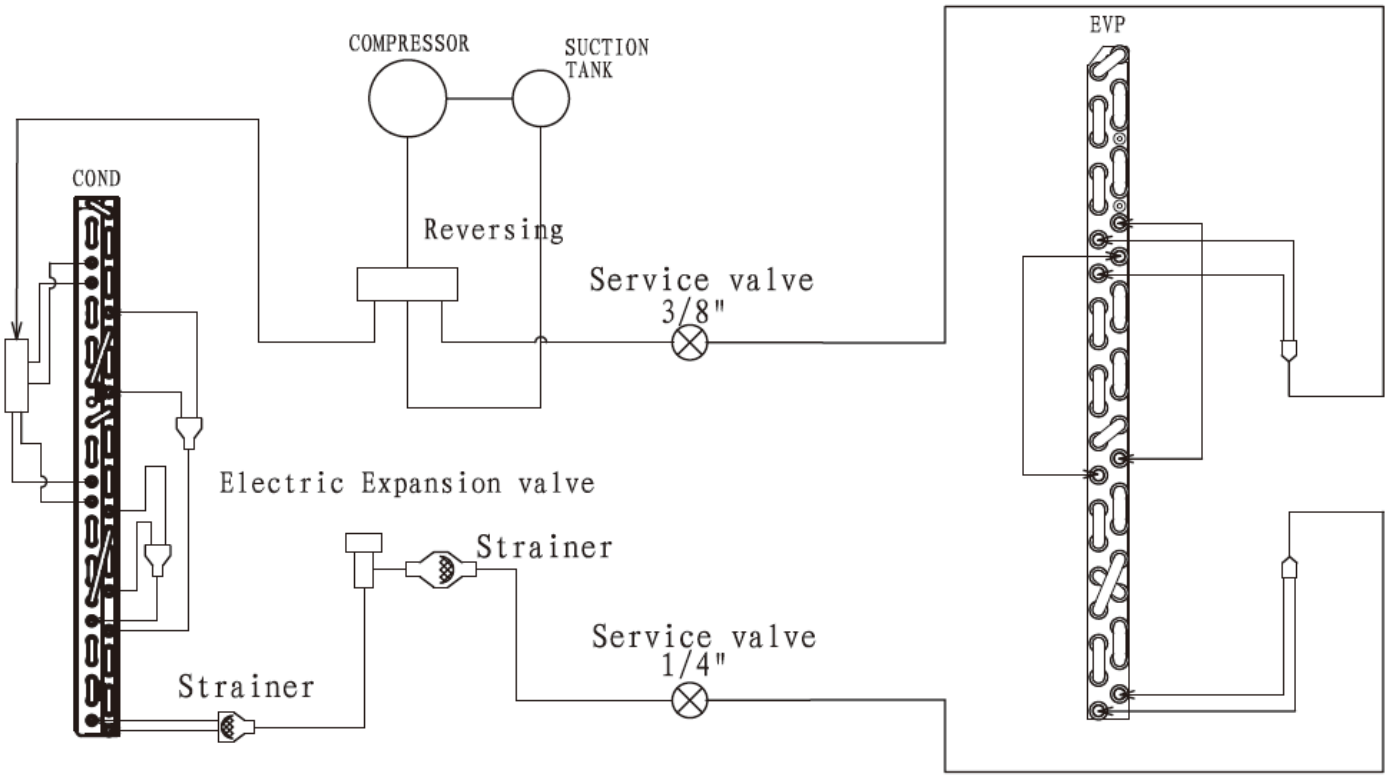

8.3.20. DUCT TYPE: RAD-50PPA/60PPA / RAC-50DPA/60DPA

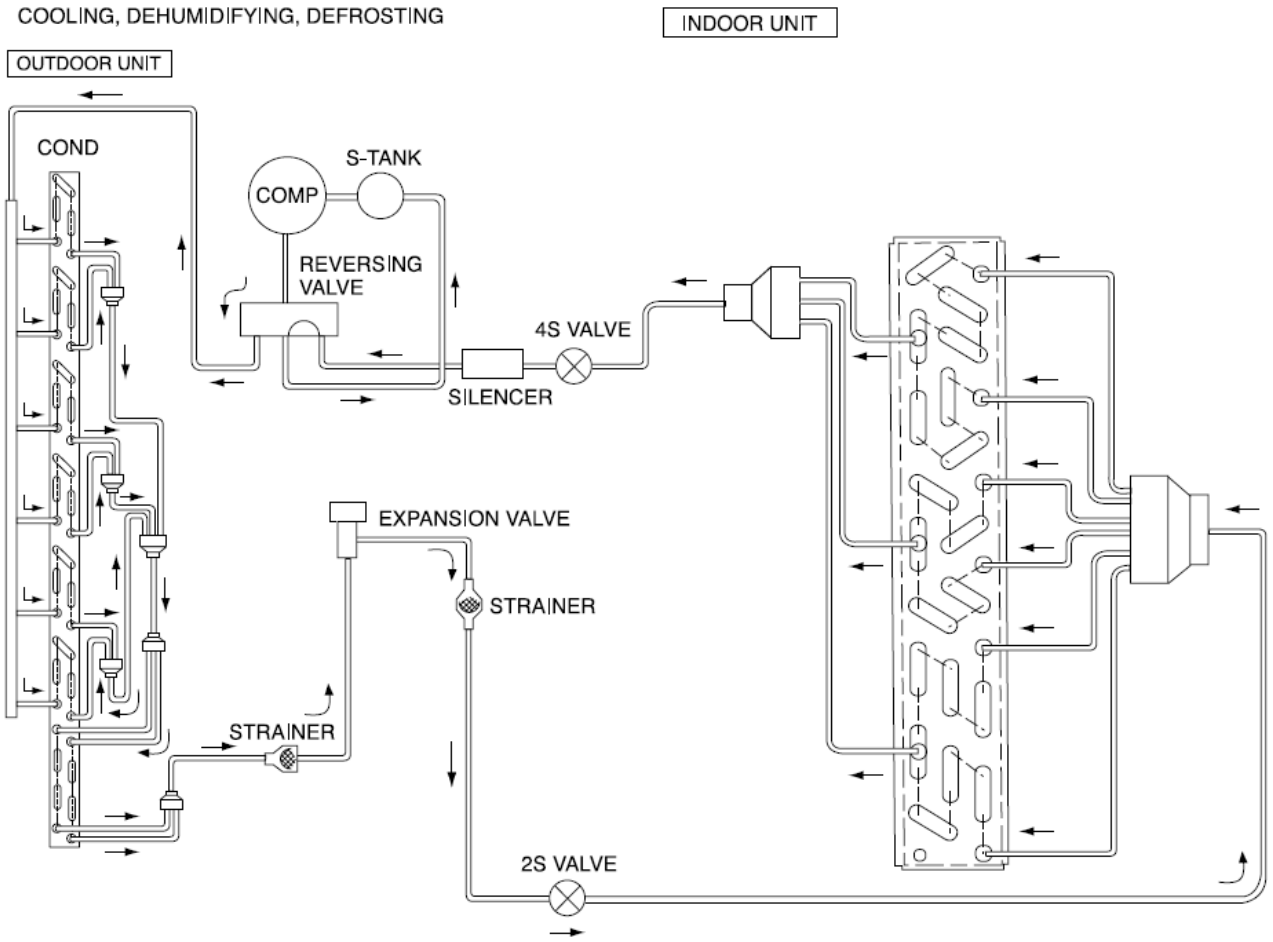

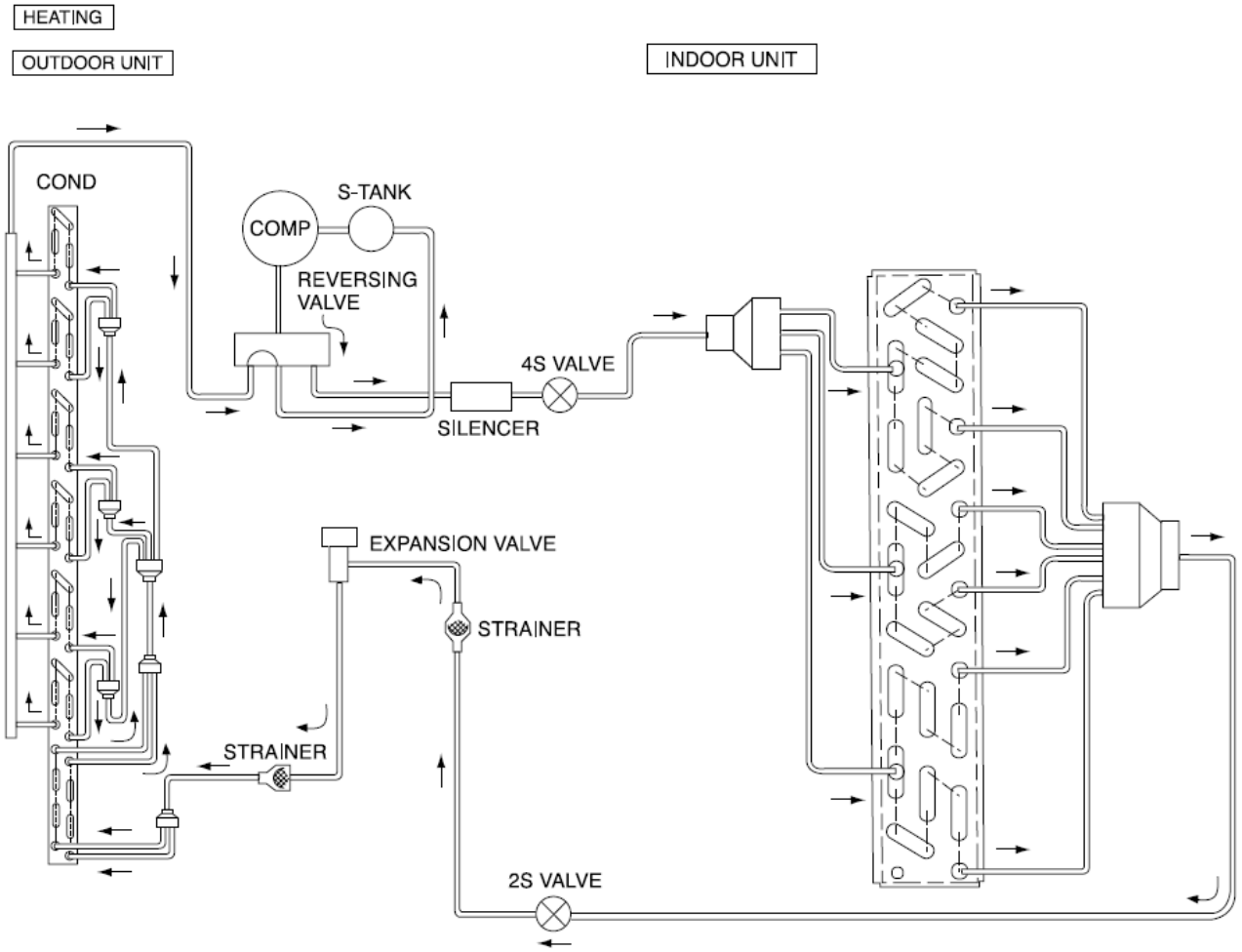

8.3.21. DUCT TYPE: RAD-70PPA / RAC-70DPA

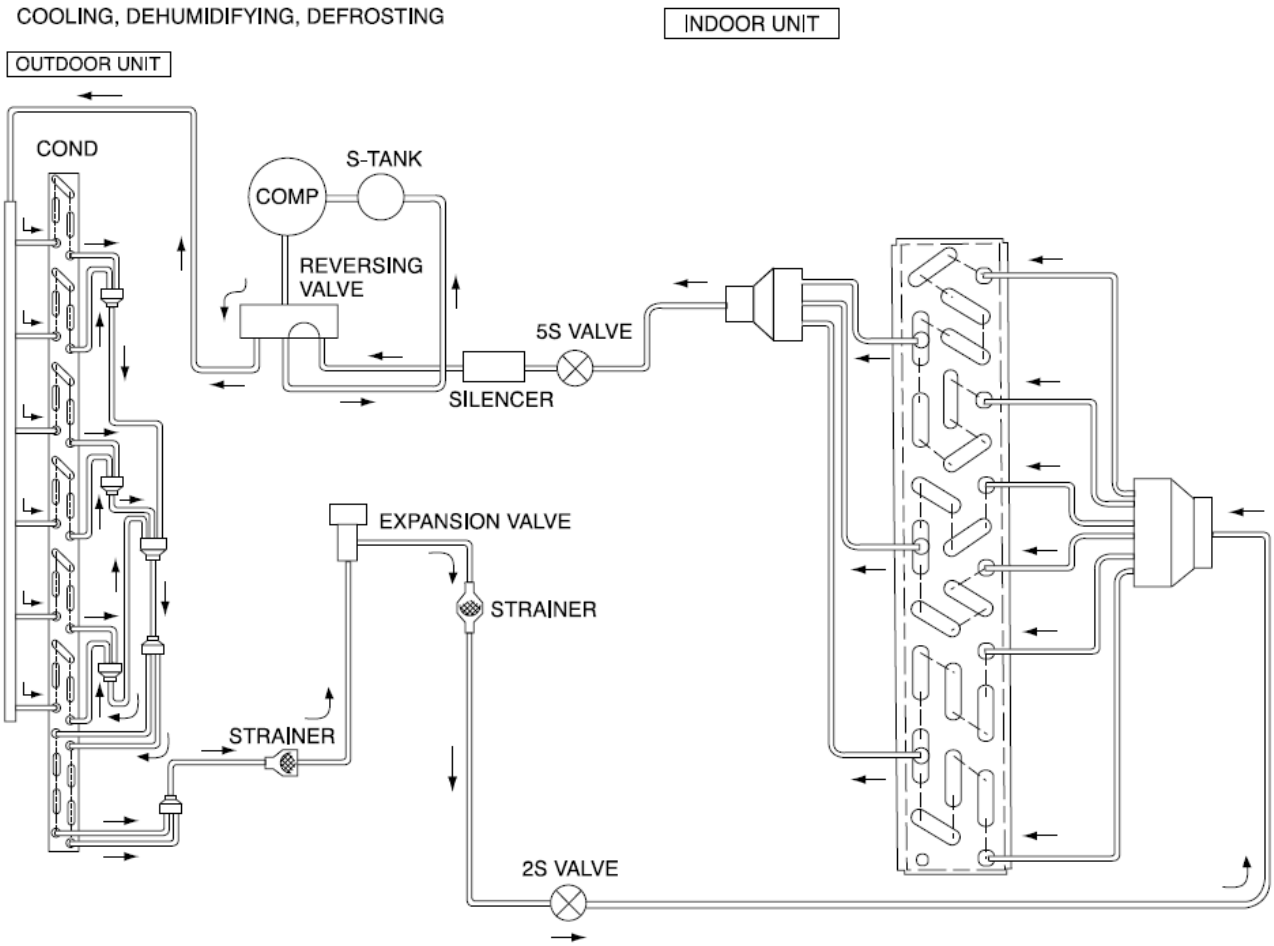

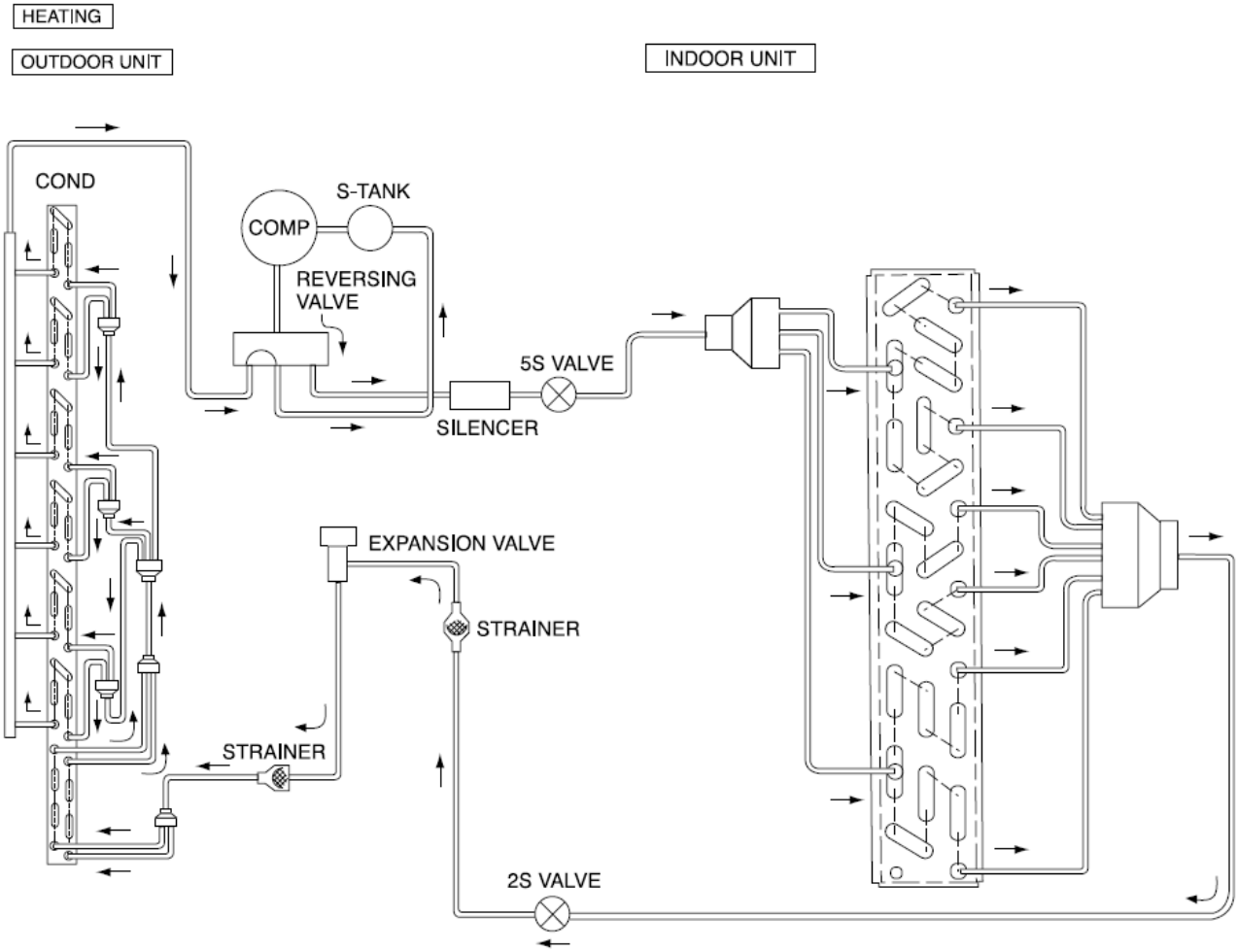

9 REMOTE CONTROLLERS OPERATION

CONTENTS

9 REMOTE CONTROLLERS OPERATION 9-1
9.1 WIRELESS REMOTE CONTROL FUNCTION 9-2
9.1.1. RAR-5E1, RAR-5E2, RAR-5E3, RAR-5E4, RAR-5E5 9-2
9.1.2. RAR-5J1. RAR-5J2 9-9
9.1.3. RAR-5F1 9-13
9.2 Wired Remote Control (OPTIONAL) 9-16
9.2.1. REMOTE CONTROLLER TYPE 9-16
9.2.2. SHIFT VALUE 9-17
9.2.3. ERROR CODE INFORMATION 9-17

9.1 WIRELESS REMOTE CONTROL FUNCTION

9.1.1. RAR-5E1, RAR-5E2, RAR-5E3, RAR-5E4, RAR-5E5

REMOTE CONTROLLER TYPE

RAR-5E1	RAR-5E2	RAR-5E3	RAR-5E4	RAR-5E5 (SPX-RCKA)
RAK-18QPA RAK-25QPA RAK-35QPA RAK-50QPA RAK-50PPA RAK-70PPA	RAK-18PSPA RAK-25PSPA RAK-35PSPA RAK-18PPA RAK-25PPA RAK-35PPA RAK-60PPA RAK-18QXA RAK-25QXA RAK-35QXA RAK-50QXA RAF-25RPA RAF-35RPA RAF-50RPA RAI-25RPA RAI-35RPA RAI-50RPA	RAK-25PXA RAK-35PXA RAK-50PXA	RAF-25PXA RAF-35PXA RAF-50PXA RAF-25QXA RAF-35QXA RAF-50QXA	RAD-18RPA (optional) RAD-25RPA (optional RAD-35RPA (optional) RAD-50RPA (optional) RAD-50PPA (optional) RAD-60PPA (optional) RAD-70PPA (optional)

BUTTONS	FUNCTION
MODE	**MODE Selector** Use this button to select the operationg mode. Every time you press this button, the mode will change from (AUTO) → (HEAT) → (DEHUMIDIFY) → (COOL) and → (FAN) cyclically.
FAN	**FAN SPEED Selector Button** This determines the fan speed. Every time you press this button, the airflow rate will change from (AUTO) → (HIGH) → (MED) → (LOW) → (SILENT) (This button allows selection of optimal or preferred fan speed for each operation mode).
	START/STOP button Press this button to start operation. Press it again to stop operation.
ECO	**ECO button** Use this button to set the ECO mode.
	POWERFUL button Use this button to set the POWERFUL mode.
	SILENT button Use this button to set the SILENT mode.
	INFO button 1) Press this button to display temperature for 10 seconds. 2) Press this button to check monthly power consumption. 3) Press this button to recieve the current calendar and clock.
	ECO SLEEP TIMER button Use this button to set the ECO sleep timer.
	AUTO SWING (Vertical) button Controls the angle of the horizontal air deflector.
	AUTO SWING (Horizontal) button Controls the angle of the vertical air deflector.
10°C	**LEAVE HOME button** Prevent the room temperature from falling too much by setting temperature 10°C automatically when no on is at home.
	ONE TOUCH CLEAN button Drying indoor heat exchanger after cooling operation to prevent mildew.
	AIR PURIFIER button Use this button to start air puritying function.
	EXTENDED AIR FLOW button Press this button during operation to start extended airflow operation.
WEEKLY TIMER buttons	
OFF TIMER ON	**ON/OFF TIMER button** The device will turn on (off) and off (on) at the designated time.
TIME	**TIME button** Press the button to set starting time of the program
OK	**OK button** Press the button to save the program. The button shall be pressed everytime after finishing a program setting.
DELETE	**DELETE button** 1) Press the button to delete the selected program. 2) Press the button for about 10 seconds by directing the remote controller towards the indoor unit while Mode A or B display blinks, programs for Mode A or B will be deleted both from the indoor unit and the remote controller after the beep sound from the indoor unit.
Mon-Sun	**DAY button** Select the desired day of the week.
1−6	**PROGRAM NO. button** Press this button to select a program number.
CANCEL	**CANCEL** 1) Press the button to cancel the current setting process on the screen. 2) Press the button by directing the remote controller towards the indoor unit, hen weekly timer setting will be canceled from indoor unit after the beep sound from the indoor unit. The program setting remains in the remote controller.
SEND	**SEND button** Press the button for about 3 seconds by directing the remote controller towards the indoor unit after finishing the program setting. Timer lamp on the indoor unit will blink rapidly and after the beep soung from indoor unit, TIMER lamp will light up.
CLOCK	**CLOCK button** Press the button to set calendar and clock.
WEEKLY (A/B)	**WEEKLY TIMER MODE button** 1) Select Mode A or Mode B. 2 modes can be set and stored as a weekly timer. 2) By pressing the button longer than 3 seconds, program setting screen will appear.

9.1.1.1 AUTOMATIC OPERATION

COOLING/HEATING mode is decided by the room temperature.

A. COOLING/HEATING mode is decided during the **initial start up** of Automatic Operation
Initial start up of Automatic Operation means the following either condition:
- Unit start up in Automatic Operation
- Automatic Operation mode is pressed while the unit is running in manual mode

Start up room temperature	COOL / HEAT
>= Remote controller setting temperature	Unit runs in COOLING mode
< Remote controller setting temperature	Unit runs in HEATING mode

B. COOLING/HEATING mode is decided **in intervals after the initial start up** of Automatic Operation (also known as Auto Changeover function)

**Auto changeover function is not applicable to RAD-50PPA, RAD-60PPA, and RAD-70PPA models and to other indoor models when connected to Multizone outdoor unit.*

RAK-QXA, RAK-QPA, RAI-RPA, RAD-RPA, RAF-PXA, RAF-QXA, RAK-50PPA, RAK-60PPA, RAK-70PPA, RAK-50PXA

Intervals	Duration
1st interval	10 minutes
2nd interval	15 minutes
Subsequent interval	Every 55 minutes

RAK-PSPA, RAK-18PPA, RAK-25PPA, RAK-35PPA, RAK-25PXA, RAK-35PXA

Intervals	Duration
1st interval	5 minutes
2nd interval	15 minutes
Subsequent interval	Every 55 minutes

RAF-RPA

Intervals	Duration
1st interval	30 minutes
2nd interval	50 minutes
Subsequent interval	Every 55 minutes

COOLING/HEATING mode is determined by setting the hysteresis on the final preset temperature.

(RAK-QXA, RAK-QPA, RAI-RPA, RAD-RPA, RAF-PXA, RAK-50PPA, RAK-60PPA, RAK-70PPA, RAK-50PXA)
Final preset temperature = Remote Controller setting temperature + Σ (sum of all types shift values)
(e.g. temperature shift value, Powerful shift value, Eco shift value, Eco sleep shift value, etc)

Current operation mode	Current room temperature	Next operation mode
COOLING	<= [Final preset temperature - 3 °C]	Change to HEATING
COOLING	> [Final preset temperature - 3 °C]	Continue COOLING

Current operation mode	Current room temperature	Next operation mode
HEATING	>= [Final preset temperature + 2 °C]	Change to COOLING
HEATING	< [Final preset temperature + 2 °C]	Continue HEATING

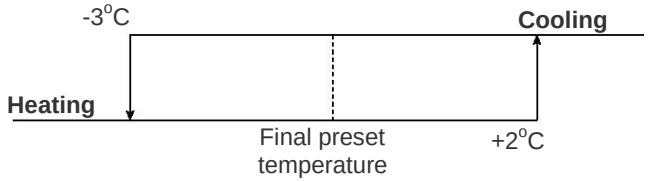

RAK-PSPA, RAK-18PPA, RAK-25PPA, RAK-35PPA, RAK-25PXA, RAK-35PXA, RAF-RPA

Current operation mode	Current room temperature	Next operation mode
COOLING	<= [Final preset temperature - 2 °C]	Change to HEATING
COOLING	> [Final preset temperature - 2 °C]	Continue COOLING

Current operation mode	Current room temperature	Next operation mode
HEATING	>= [Final preset temperature + 3 °C]	Change to COOLING
HEATING	< [Final preset temperature + 3 °C]	Continue HEATING

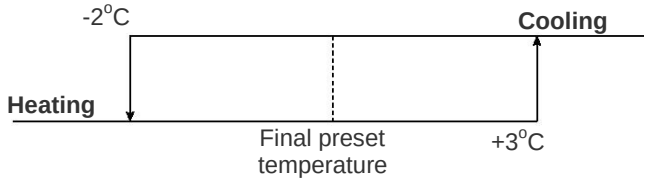

9.1.1.2 SHIFT VALUE

1. Press and hold ⏻ (START/STOP) button and TIMER ON (ON) button.
2. Press RESET [RESET] button on the same time. Release RESET [RESET] button only, then release ⏻ (START/STOP) and TIMER ON (ON) button once Screen 1 appears.

Screen 1

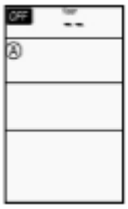

Screen 2

3. Press the MODE (MODE) button to display fan mode (Screen 3).

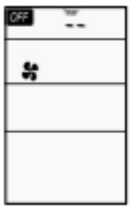

Screen 3

4. Press ⏻ (START/STOP) and Screen 4 appear.

Screen 4

5. Select FAN (FAN SPEED) button to choose Heating Shift or Cooling Shift Mode (Screen 5).

By setting fan speed to HIGH or MED , it will go to Cooling Shift mode.
By setting fan speed to LOW or SILENT, it will go to Heating Shift mode.

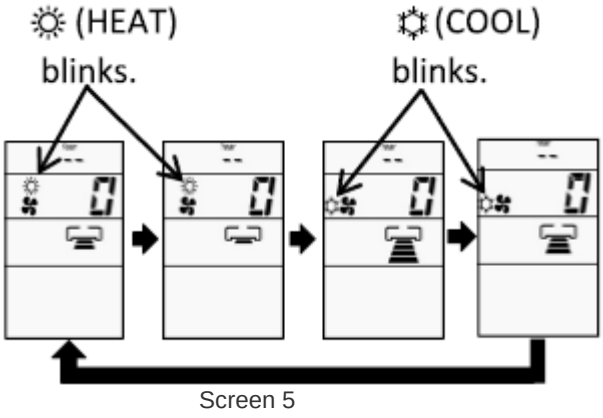

Screen 5

6. Press the Temperature button (or) to adjust the shift value.

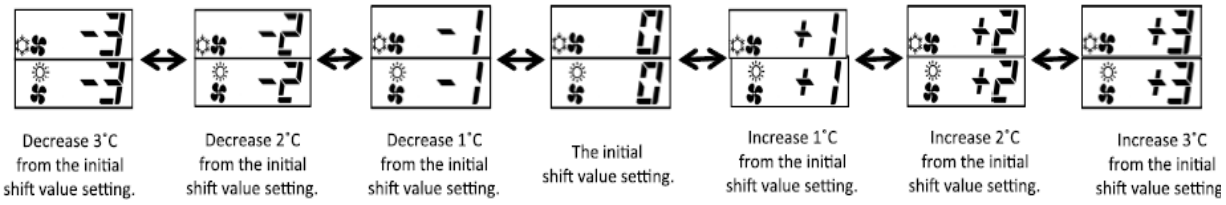

NOTE:
1. There are total of 7 shift values ranging from -3 to 3.
2. The displayed shift value, (HEAT) and (COOL) symbol on the remote controller display will be disappear after 10 seconds
3. The changed shift value will remain unchanged after turned off the power.
4. If “0” is displayed on the remote controller display, it indicates the shift value is now at the initial setting.

9.1.1.3 OPERATION LOCK

1. HEATING MODE
   a) Press and hold ECO (ECO) and POWERFUL (POWERFUL) buttons, press RESET (RESET) button on the same time. Release RESET (RESET) button only when Screen 1 appear, then release ECO (ECO) button and POWERFUL (POWERFUL) button.

Screen 1

   b) Wait until only Screen 2 appear.

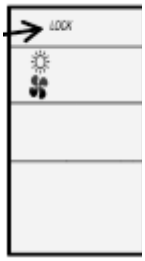

Screen 2

   c) The heating mode operation is locked.
   d) To unlock HEATING mode, repeat step (a). After all operations mode symbols displayed for 10 seconds, the operation mode symbol before cancellation will be display. The heating mode operation is unlocked.

2. COOLING AND DEHUMIDIFYING MODE
   a) Press and hold ECO (ECO) and SILENT (SILENT) buttons for at least 5 seconds when the remote controller is OFF.
   b) Wait until only and displayed on the screen. The cooling and dehumidifying modes operation is locked.
   c) To unlock HEATING mode, repeat step (a). After all operations mode symbols displayed for 10 seconds, the operation mode symbol before cancellation will be display. The cooling and dehumidifying mode operation is unlocked.

9.1.1.4 SETTING THE PREVENTION OF MUTUAL INTERFERENCE

1. Please ensure the other indoor unit is OFF.
2. Press 1~6 (PROGRAM NO.) button, TIMER ON (ON TIMER) button and RESET (RESET) button simultaneously. The remote controller will display Screen 1 and followed by Screen 2. The indoor unit beeps to indicate that it has just received the signal from remote controller.

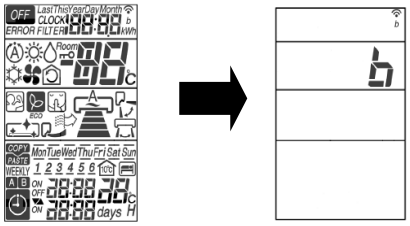

Screen 1 Screen 2

NOTE:

1. If indoor unit still not receive the correct signal from the correct remote controller, setting shall be made again. By setting again for the 2nd time, the signal address will change from B to A, then repeat again for the 3rd time.
2. As for *RAK-18PPA, RAK-25PPA, RAK-35PPA, RAF-50RPA,* please set the pin No. 6 of the DIP switch at the indoor unit to ON position when selecting channel B for ID communication. *(Please refer to Chapter 1.3.2 for more information)*

9.1.1.5 ERROR CODE INFORMATION

1. In case failure occurs to the air conditioner, by pressing INFO (INFO) button, an error code will be displayed.
2. Direct the remote controller towards the receiver of indoor unit (within 2 meters in from of indoor unit) and press INFO (INFO) button.
3. Wait for 2 seconds for signal transmission and the error code will be displayed.

	TIMER LAMP BLINKING	LED301 BLINKING	CODE	MEANING
INDOOR	-	-	000 00	Normal
	1 time		001 00	Refrigerant cycle fault
	2 times	-	-	Outdoor unit is under forced operation
	3 times	9 times	003 00	Communication error between indoor and outdoor units
	6 times	-	006 00	Abnormal water level: ceiling/small duct
	9 times	-	009 00	Indoor thermistor
	10 times	-	010 00	Abnormal rotating numbers
	11 times	-	011 00	High voltage generator defective
	12 times	-	012 00	Outdoor power defective
	13 times	-	013 00	IC401 data reading error
OUTDOOR	-	2 times	002 01	Peak current cut
	-	3 times	003 01	Compressor abnormal low speed rotation
	4 times	4 times	004 01	Compressor switching failure
	-	5 times	005 01	Overload lower limit cut
	-	6 times	006 01	OH thermistor temperature rise
	4 times	7 times	007 01	Abnormal outdoor thermistor
	4 times	8 times	008 01	Acceleration defective

	TIMER LAMP BLINKING	LD301 BLINKING	CODE	MEANING
OUTDOOR	3 times	9 times	009 01	Communication error
	-	10 times	010 01	Abnormal power source
	-	11 times	011 01	Fan stop for strong wind
	4 times	12 times	012 01	Fan motor fault
	4 times	13 times	013 01	EEPROM reading error
	4 times	14 times	014 01	Active converter defective
	4 times	15 times	015 01	Abnormal PWB circuit
	-	16 times	016 01	Software peak current cut
	4 times	2 times	071 01	Overheat thermostat
	4 times	2 times	072 01	Defrost thermostat
	4 times	3 times	073 01	Outdoor temperature thermostat
	4 times	4 times	074 01	Narrow pipe thermostat (indoor 1)
	4 times	5 times	075 01	Wide pipe thermostat (indoor 1)
	4 times	6 times	076 01	Narrow pipe thermostat (indoor 2)
	4 times	7 times	077 01	Wide pipe thermostat (indoor 2)
	4 times	8 times	078 01	Narrow pipe thermostat (indoor 3)
	4 times	9 times	079 01	Wide pipe thermostat (indoor 3)
	4 times	10 times	080 01	Narrow pipe thermostat (indoor 4)
	4 times	11 times	081 01	Wide pipe thermostat (indoor 4)
	4 times	12 times	082 01	Narrow pipe thermostat (indoor 5)
	4 times	13 times	083 01	Wide pipe thermostat (indoor 5)

9.1.2. RAR-5J1. RAR-5J2

REMOTE CONTROLLER TYPE

RAR-5J1	RAR-5J2
RAK-18PSA RAK-25PSA RAK-35PSA	RAK-18PSAN RAK-25PSAN RAK-35PSAN

BUTTONS	FUNCTION
	MODE Selector Use this button to select the operationg mode. Every time you press this button, the mode will change for ☼ (HEATING), ◯ (DEHUMIDIFYING), ❄ (COOLING) cyclically.
FAN	**FAN SPEED Selector Button** This determines the fan speed. Every time you press this button, the airflow rate will change from (AUTO) → (HIGH) → (MED) → (LOW) → (SILENT) (This button allows selection of optimal or preferred fan speed for each operation mode).
OFF	**STOP button** Press this button to stop operation.
	ECO button Use this button to set the ECO mode.
	POWERFUL button Use this button to set the POWERFUL mode.
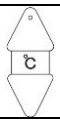	**TEMPERATURE button** Value will change quicker when keep pressing.
	AUTO SWING (Vertical) button Controls the angle of the horizontal air deflector.
	AUTO SWING (Horizontal) button Controls the angle of the vertical air deflector.
	LEAVE HOME button Prevent the room temperature from falling too much by setting temperature 10°C automatically when no on is at home.
	ECO SENSOR button Press this button to enter eco sensor mode.
	SLEEP TIMER button Use this button to set the sleep timer.
	ON TIMER button Select the turn ON time.
	OFF TIMER button Select the turn OFF time.
	ONE TOUCH CLEAN button Drying indoor heat exchanger after cooling operation to prevent mildew.
	FILTER CLEAN button Start filter cleaning operation while the air conditioner .
	AUTO button Press this button to start automatic operation/
	COMFORT AIRFLOW button Press this button to start comfort airflow operation.
	IONIZED MIST button Press this button to start ionized mist operation.
	ON/OFF TIMER button The device will turn on (off) and off (on) at the designated time.
	TIME button Press the button to set starting time of the program
CANCEL	**CANCEL** 1) Press the button to cancel the current setting process on the screen. 2) Press the button by directing the remote controller towards the indoor unit, hen weekly timer setting will be canceled from indoor unit after the beep sound from the indoor unit. The program setting remains in the remote controller.
SEND	**SEND button** Press the button for about 3 seconds by directing the remote controller towards the indoor unit after finishing the program setting. Timer lamp on the indoor unit will blink rapidly and after the beep soung from indoor unit, TIMER lamp will light up.
	CLOCK button Press the button to set calendar and clock.

9.1.2.1 AUTOMATIC OPERATION

COOLING/HEATING/DEHUMIDIFICATION mode is decided by the room temperature and external air temperature.

A. COOLING/HEATING/ DEHUMIDIFICATION mode is decided during the **initial start up** of Automatic Operation
Initial start up of Automatic Operation means the following either condition:

- Unit start up in Automatic Operation
- Automatic Operation mode is pressed while the unit is running in manual mode

Mode	Room Temperature		External Air Temperature	*Temperature on remote controller will automatically set at
Unit runs in COOLING mode	Room temperature > 27˚C	AND	21˚C <= External air temperature	27˚C (Fan speed mode : AUTO, LOW, SILENT)
	OR			
	Room temperature <=27˚C	AND	External air temperature >=25˚C	
Unit runs in DEHUMIDIFICATION mode	Room temperature > 27˚C		18˚C <= External air temperature <=21˚C	Room temperature at the start of the operation (Fan speed mode: AUTO, LOW, SILENT)
	OR			
	23˚C< Room temperature <=27˚C		25˚C <= External air temperature <=18˚C	
	OR			
	Room temperature <=23˚C	AND	21˚C <= External air temperature <=25˚C	
Unit runs in HEATING mode	Room temperature > 23˚C		External air temperature <=18˚C	23˚C (Fan speed mode: AUTO, LOW, MEDIUM)
	OR			
	Room temperature <=23˚C	AND	External air temperature <=21˚C	

NOTE: *Please refer item C for the information on adjusting room temperature.

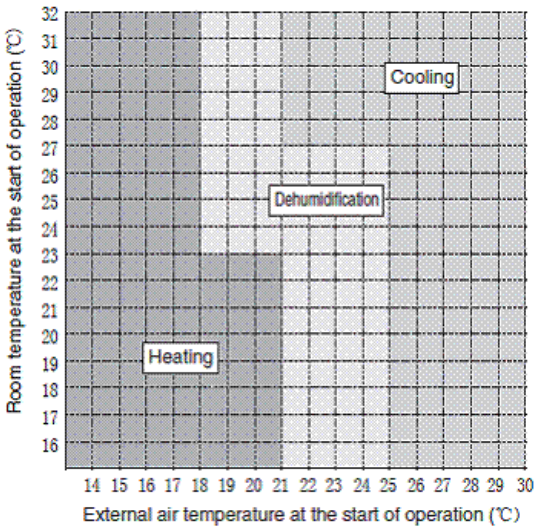

B. COOLING/HEATING/ DEHUMIDIFICATION mode is decided **in intervals after the initial start up** of Automatic Operation (also known as Auto Changeover function).

Intervals	Duration
Every Interval	60 minutes

C. ADJUST THE ROOM TEMPERATURE by pressing the (ROOM TEMPERATURE) button.

- Every time the button is pressed, a short beep sound is emitted and the temperature will change by 1˚C.
- +1 is displayed if the temperature is set higher that the automatically set room temperature by 1˚C.
- -1 is displayed if the temperature is set higher that the automatically set room temperature by 1˚C. The adjustable temperature range is not higher or lower that 3˚C of the automatically set room temperature.
- Humidity setting cannot be adjusted.

.

9.1.2.2 OPERATION LOCK

1. HEATING MODE
   a) Press RESET [RESET] button
   b) Press and hold OFF (OFF) and ☼ (HEATING) buttons for at least 5 seconds when the remote controller is OFF.
   c) Wait until only ☼ and 🔑 displayed on the screen. The heating mode operation is locked.
   d) To unlock HEATING mode, repeat step (a). The heating mode operation is unlocked.

2 COOLING AND DEHUMIDIFYING MODE
   a) Press RESET [RESET] button
   b) Press and hold OFF (OFF) and ❄ (COOLING) buttons for at least 5 seconds when the remote controller is OFF.
   c) Wait until only ❄ and 🔑 displayed on the screen. The cooling and dehumidifying modes operation is locked.
   d) To unlock COOLING mode, repeat step (a). The cooling and dehumidifying mode operation is unlocked.

9.1.2.3 SETTING THE PREVENTION OF MUTUAL INTERFERENCE

1. Please ensure the other indoor unit is OFF.
2. Press RESET (RESET) button on the remote controller.
3. Point the remote controller transmitter/receiver at the indoor unit and move the switch of the Address Selector Switch to B. (Factory setting is set to “A”. The Address Selector Switch is on the outside the remote controller battery cover as per Screen 1)

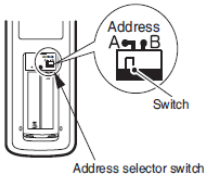

Screen 1

4. The channel is set when the unit beeps.

Note:
After changing the address, please confirm the unit’s operation with the remote controller. If the unit does not operate, return the switch to “A” and set the switch again.

9.1.3. RAR-5F1

RAR-5F1
RAK-18PEA RAK-25PEA RAK-35PEA RAK-50PEA

BUTTONS	FUNCTION
	MODE Selector Use this button to select the operationg mode. Every time you press this button, the mode will change for (HEATING), (DEHUMIDIFYING), (COOLING) cyclically.
FAN	**FAN SPEED Selector Button** This determines the fan speed. Every time you press this button, the airflow rate will change from (AUTO) → (HIGH) → (MED) → (LOW) → (SILENT) (This button allows selection of optimal or preferred fan speed for each operation mode).
OFF	**STOP button** Press this button to stop operation.
	ECO button Use this button to set the ECO mode.
	POWERFUL button Use this button to set the POWERFUL mode.
	TEMPERATURE button Value will change quicker when keep pressing.
	AUTO SWING (Vertical) button Controls the angle of the horizontal air deflector.
ON	**ON TIMER button** Select the turn ON time.
OFF	**OFF TIMER button** Select the turn OFF time.

For more information, please refer to the operation manual.

9.1.3.1 SHIFT VALUE

1. Press and hold (OFF) button and (ON) button.
2. Press [RESET] button on the same time. Release [RESET] button only, then release (OFF) and (ON) button once Screen 1 appears.

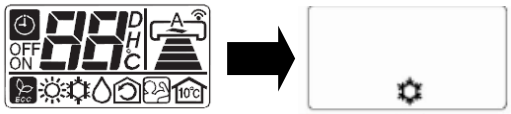

Screen 1 Screen 2

3. Press the (DEHUMIDIFYING) button to display (FAN SPEED) as in Screen 3.

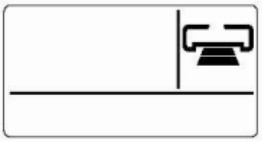

Screen 3

4. Press the Temperature button (or) to change the shift value.
   (The shift value is changed with a beep.)

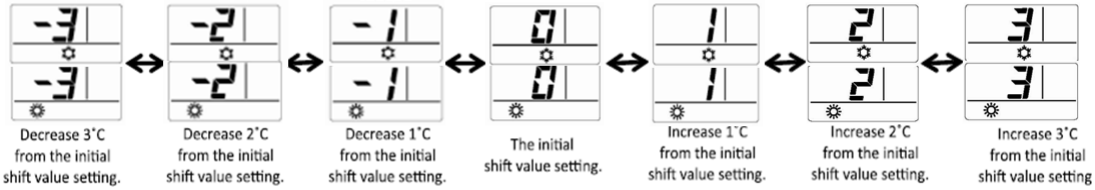

5. Select (FAN SPEED) button to choose Heating Shift or Cooling Shift Mode (Screen 4).

   By setting fan speed to HIGH or MED , it will go to Cooling Shift mode.
   By setting fan speed to LOW or SILENT, it will go to Heating Shift mode.

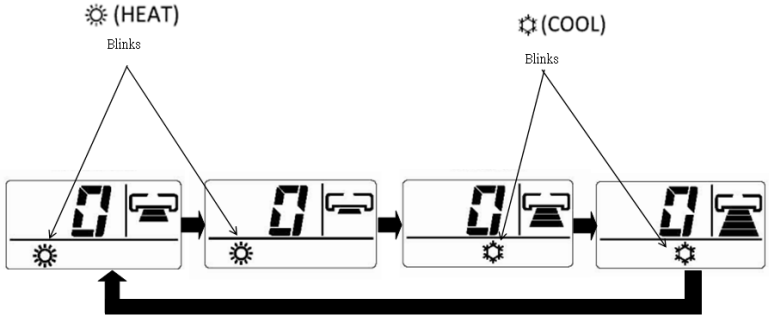

Screen 4

NOTE:

1. There are total of 7 shift values ranging from -3 to 3.
2. The displayed shift value, (HEAT) and (COOL) symbol on the remote controller display will be disappear after 10 seconds
3. The changed shift value will remain unchanged after turned off the power.
4. If “0” is displayed on the remote controller display, it indicates the shift value is now at the initial setting.

9.1.3.2 SETTING THE PREVENTION OF MUTUAL INTERFERENCE

d) Please ensure that the other indoor unit is OFF and the dip switch pin NO.6 at the indoor unit is ON to set the indoor unit ID communication channel to channel B. *(Please refer to Chapter 1.3.2 for more information regarding the dip switch)*

e) Open the cover/case of the remote controller and remove the PCB board as in Screen 1.

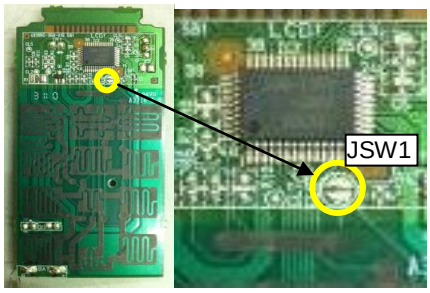

Screen 1

f) Solder to short soldering point JSW1 on the PWB board's surface as in Screen 2(before) to become Screen 3(after).

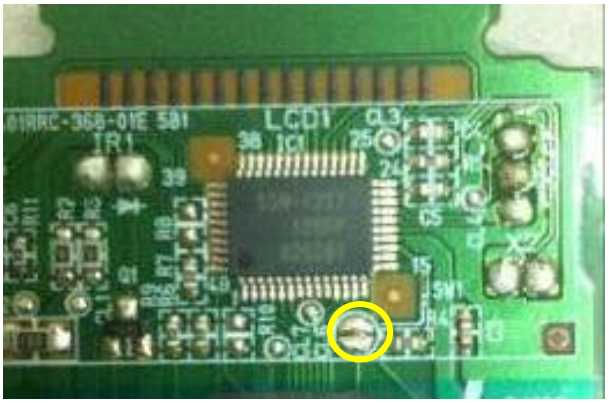

Screen 2 (Channel A)

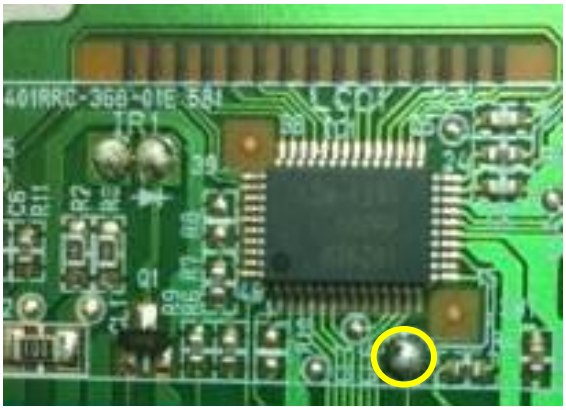

Screen 3 (Channel B)

g) Assemble back the remote controller and reinstall it.

9.2 WIRED REMOTE CONTROL (OPTIONAL)

9.2.1. REMOTE CONTROLLER TYPE

This controls the operation function and timer setting of the room air conditioner.

<table>
<tr><td>RAR-5G1 (SPX-RCDA)

</td><td colspan="3">RAR-5G2 (SPX-RCDB)

</td></tr>
<tr><td>RAD-18RPA
RAD-25RPA
RAD-35RPA
RAD-50RPA
RAD-50PPA
RAD-60PPA
RAD-70PPA</td><td>RAK-18QPA
RAK-25QPA
RAK-35QPA
RAK-50QPA
RAK-18PPA
RAK-25PPA
RAK-35PPA
RAK-50PPA
RAK-60PPA
RAK-70PPA
RAK-18PEA
RAK-25PEA
RAK-35PEA
RAK-50PEA</td><td>RAK-18PSPA
RAK-25PSPA
RAK-35PSPA
RAK-18QXA
RAK-25QXA
RAK-35QXA
RAK-50QXA
RAK-25PXA
RAK-35PXA
RAK-50PXA</td><td>RAF-25RPA
RAF-35RPA
RAF-50RPA
RAF-25PXA
RAF-35PXA
RAF-50PXA
RAF-25QXA
RAF-35QXA
RAF-50QXA

RAI-25RPA
RAI-35RPA
RAI-50RPA</td></tr>
</table>

BUTTONS	FUNCTION
	MODE Selector Use this button to select the operationg mode. Every time you press this button, the mode will change from Ⓐ (AUTO) → ☼ (HEAT) → ○ (DEHUMIDIFY) → ☼ (COOL) and → ✻ (FAN) cyclically.
FAN	**FAN SPEED Selector Button** This determines the fan speed. Every time you press this button, the airflow rate will change from (AUTO) → (HIGH) → (MED) → (LOW) → (SILENT) (This button allows selection of optimal or preferred fan speed for each operation mode).
	START/STOP button Press this button to start operation. Press it again to stop operation.
	SLEEP button Use this button to set the SLEEP timer.
SET	**SET button** Timer setting reservation.
OFF	**OFF button** Select the turn OFF timer.
ON	**ON button** Select the turn ON timer.
CANCEL	**CANCEL button** Cancel timer reservation.
	AUTO SWING (Vertical) button Controls the angle of the horizontal air deflector.
	ROOM TEMPERATURE setting button Value will change quicke when keep pressing.

9.2.2. SHIFT VALUE

1. Press and hold ⏻ (START/STOP) button and ON (ON TIMER) button at the same time until remote controller now enter 'Shift value change mode'.
2. Press ⏻(START/STOP) button so that the display indicates FAN (FAN) speed.
3. Select FAN(FAN SPEED) button to choose Heating Shift or Cooling Shift Mode.

   By setting fan speed to HIGH or MED , it will go to Cooling Shift mode.
   By setting fan speed to LOW or SILENT, it will go to Heating Shift mode.

4. Press (ROOM TEMPERATURE) button to change the shift value (-3°C ~ 0 ~ 3°C).

5. Press ⏻ (START/STOP) button to send new shift value setting mode, the display indicate in stand by mode.

NOTE:
1. There are total of 7 shift values ranging from -3 to 3.
2. The changed shift value will remain unchanged after turned off the power.

9.2.3. ERROR CODE INFORMATION

1. In case failure occurs to the air conditioner, the error code will constantly appear on the wired remote controller display.

	TIMER LAMP BLINKING	LED301 BLINKING	CODE	MEANING
INDOOR	-	-	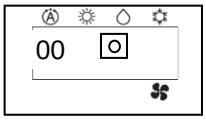	Normal
	1 time		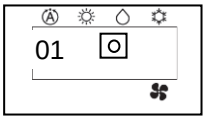	Refrigerant cycle fault
	2 times	-	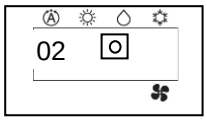	Outdoor unit is under forced operation
	3 times	9 times	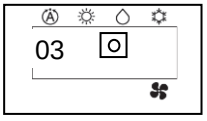	Communication error between indoor and outdoor units
	6 times	-	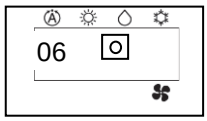	Abnormal water level: ceiling/small duct
	9 times	-	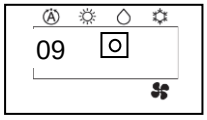	Indoor thermistor
	10 times	-	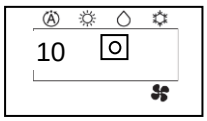	Abnormal rotating numbers
	13 times	-	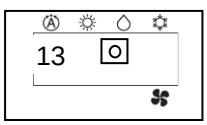	IC401 data reading error

	TIMER LAMP BLINKING	LD301 BLINKING	CODE	MEANING
OUTDOOR	-	2 times	-	Peak current cut
	-	3 times	-	Compressor abnormal low speed rotation
	4 times	4 times	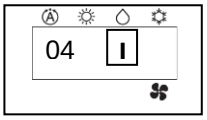	Compressor switching failure
	-	5 times	-	Overload lower limit cut
	-	6 times	-	OH thermistor temperature rise
	4 times	7 times	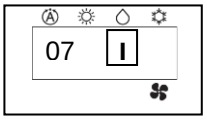	Abnormal outdoor thermistor
	-	10 times	-	Abnormal power source
	-	11 times	-	Fan stop for strong wind
	4 times	12 times	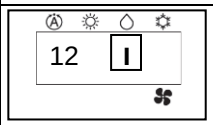	Fan motor fault
	4 times	13 times	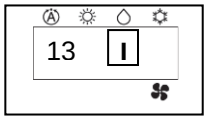	EEPROM reading error
	4 times	14 times	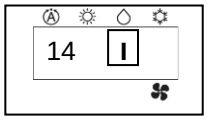	Active converter defective
	4 times	2 times	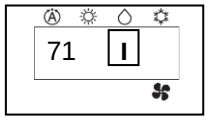	Overheat thermostat
	4 times	2 times	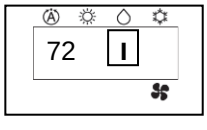	Defrost thermostat

	TIMER LAMP BLINKING	LD301 BLINKING	CODE	MEANING
OUTDOOR	4 times	3 times	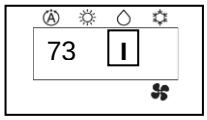	Outdoor temperature thermostat
	4 times	4 times	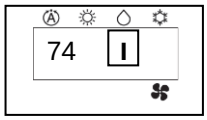	Narrow pipe thermostat (indoor 1)
	4 times	5 times	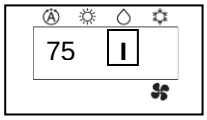	Wide pipe thermostat (indoor 1)
	4 times	6 times	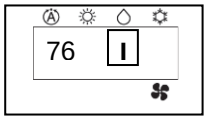	Narrow pipe thermostat (indoor 2)
	4 times	7 times	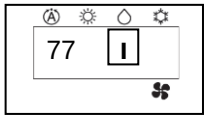	Wide pipe thermostat (indoor 2)
	4 times	8 times	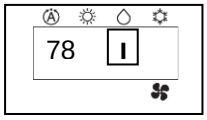	Narrow pipe thermostat (indoor 3)
	4 times	9 times	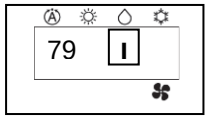	Wide pipe thermostat (indoor 3)
	4 times	10 times	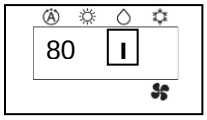	Narrow pipe thermostat (indoor 4)
	4 times	11 times	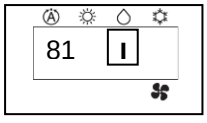	Wide pipe thermostat (indoor 4)
	4 times	12 times	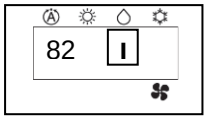	Narrow pipe thermostat (indoor 5)
	4 times	13 times	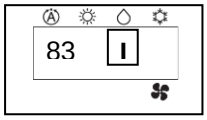	Wide pipe thermostat (indoor 5)

NOTE: Refer to Chapter 14 for more information on troubleshooting.

10 UNITS INSTALLATION

CONTENTS

10 UNITS INSTALLATION 10-1
10.1 INSTALLATION OF INDOOR UNIT 10-2
10.1.1 INSTALLATION OF WALL TYPE INDOOR 10-2
10.1.2 INSTALLATION OF FLOOR TYPE INDOOR (RAF-QXA, RAF-PXA) 10-7
10.1.3 INSTALLATION OF FLOOR TYPE INDOOR (RAF-RPA) 10-12
10.1.4 INSTALLATION OF 4 WAY CEILING CASSETTE TYPE INDOOR 10-17
10.1.5 INSTALLATION OF NORMAL STATIC PRESSURE DUCT TYPE INDOOR 10-22
10.1.6 INSTALLATION OF MIDDLE STATIC PRESSURE DUCT TYPE INDOOR 10-34
10.2 INSTALLATION OF OUTDOOR UNIT 10-41
10.2.1. SINGLE SPLIT AND MULTI TYPE OUTDOOR 10-41
10.3 FINAL STAGE OF INSTALLATION 10-44
10.3.1. INSULATION AND MAINTENANCE OF PIPE CONNECTIONS 10-44
10.3.2. INSTALLATION OF REMOTE CONTROLLER 10-44

10.1 INSTALLATION OF INDOOR UNIT

10.1.1 INSTALLATION OF WALL TYPE INDOOR

Please read the safety precautions carefully before operating the unit. The contents of this section are vital to ensure safety. Please pay special attention to the following signs.

⚠WARNING Incorrect methods of installation may cause death or serious injury

⚠CAUTION Improper installation may result in serious consequences.

⏚ Make sure to connect earth wire

⊘ This sign indicates prohibition

Be sure that the unit operates in proper condition after installation. Explain to customer the proper way of operating the unit as described in the user's guide.

⚠ WARNING

- Please request your sales agent or qualified technician to install your unit. Water leakage, short circuit of fire may occur if you do the installation work yourself.
- Please observe the instructions stated in the installation manual during the process of installation. Improper installation may cause water leakage, electric shock and fire.
- Make sure that the units are mounted at locations which are able to provide full support of the weight of the units. If not, the units may collapse and impose danger.
- Observe the rules and regulations of the electrical installation and the methods described in the installation manual when dealing with the electrical work. Use power cables approved by the authorities of your country.
- Be sure to use the specified wire for connecting the indoor and outdoor units. Please ensure that the connections are tight after the conductors of the wire are inserted into the terminals. Improper insertion and loose contact may cause over-heating and fire.
- Please use the specified piping set for the correct refrigerant gas. Otherwise, this may result in broken copper pipes or faults
- When installing or removing an air conditioner, don not allow air or moisture to remain in the refrigeration cycle. Otherwise, pressure in the refrigeration cycle may become abnormally high may cause a rupture.
- Be sure to ventilate fully in case refrigerant gas leaks while at work. If the refrigerant gas comes into contact with fire, poisonous gas might be discharged.
- After completion of installation work, check to make sure that there is no refrigeration gas leakage. If the refrigerant gas leaks into the room, coming into contact with fire in a fan-driver heater, space heater, etc; poisonous gas may be emitted.
- Unauthorized modifications to the air conditioner may be dangerous. If a breakdown occurs, please contact a qualified air conditioner technical or electrician. Improper repairs may result in water leakage, electric shock and fire.
- Be sure to connect the earth wire from power supply wire to the outdoor unit and between the outdoor and indoor unit. Improper grounding may cause electric shock. ⏚

⚠ CAUTION

- A circuit breaker or fuse must be installed. Without a circuit breaker or fuse, the danger of electric shock exists. A main switch with a contact gap of more than 3.5mm has to be installed in the power supply line to the outdoor unit.
- Do not install the unit near a location where there is a flammable gas. The indoor unit may catch fire if flammable gas leaks around it.
- Be sure to tighten the flare nut to the specified torque using a toque wrench. If the flare nut is tightened excessively, it may crack as time elapses, causing the refrigerant leakage.
- Please ensure smooth flow of water when installing the drain hose.
- Piping shall be suitable supported with a maximum spacing of 1m between supports
- An IEC approved power cord should be used. Power cord type: NYM.

■ **The Choice of Mounting site**

⚠ WARNING

- The unit should be mounted at stable, non-vibratory location which can provide full support to the unit.

⚠ CAUTION

- No nearby heat source and no obstruction near the air outlet is allowed.
- The clearance distances from top right and left are specified in figure below.
- The location must be convenient for water drainage and pipe connection with the Outdoor unit.
- To avoid interference from noise, please place the unit and its remote controller at least 1m from the radio, television and inverter type fluorescent lamp.
- To avoid any error in signal transmission form the remote controller, please put the controller far away from high-frequency machines and high-power wireless systems.
- The installation height of indoor unit must be 2.3m or more.

Installation of Hanger, Wall Penetration and Installation of Protection Pipe.

①CAUTION

- The draining of the water container inside the indoor unit can be done from the left. Therefore, the hanger must be fixed horizontally or slightly tilted towards the side of drain hose. Otherwise, condensed water may overflow the water container.

■ Direct Mounting on the Wall

- Please use hidden beams in the wall to hold the hanger

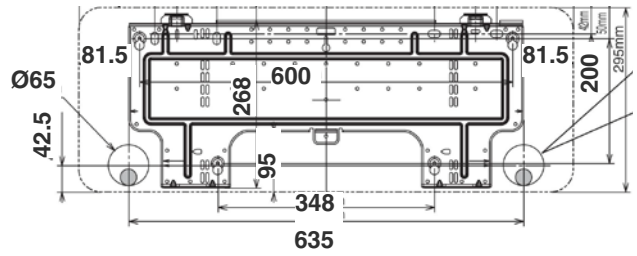

Applicable models

RAK-18PSA	RAK-18PSAN
RAK-25PSA	RAK-25PSAN
RAK-35PSA	RAK-35PSAN

Unit: mm

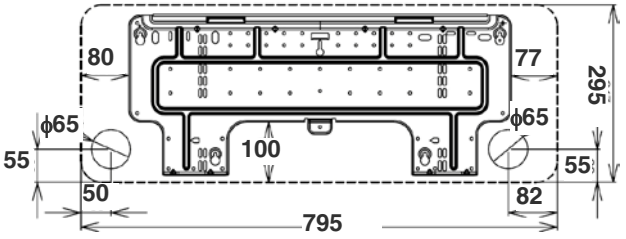

Applicable models

RAK-18QXA	
RAK-25QXA	RAK-25PXA
RAK-35QXA	RAK-35PXA
RAK-50QXA	RAK-50PXA

Unit: mm

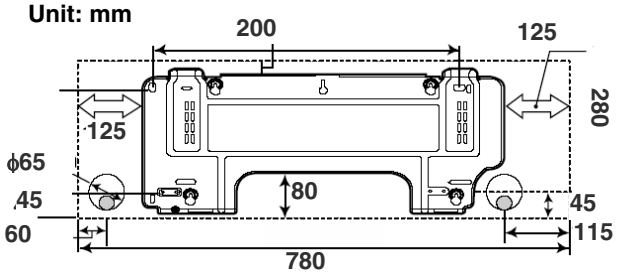

Applicable models

RAK-18PPA	RAK-35PPA
RAK-25PPA	

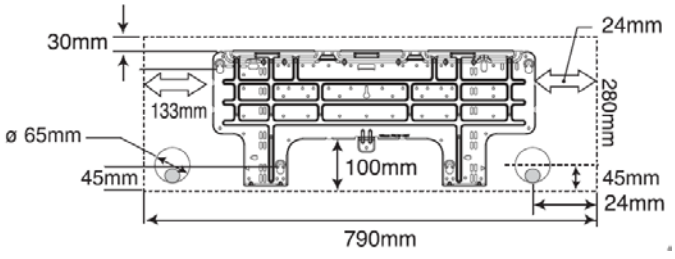

Applicable models

RAK-18QPA	RAK-50QPA
RAK-25QPA	RAK-50PPA
RAK-35QPA	

Unit: mm

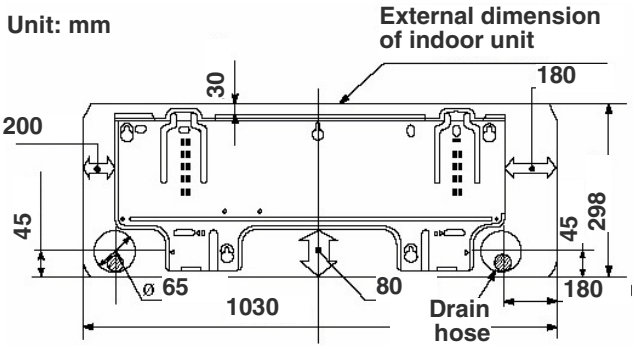

Applicable models

RAK-60PPA	RAK-70PPA

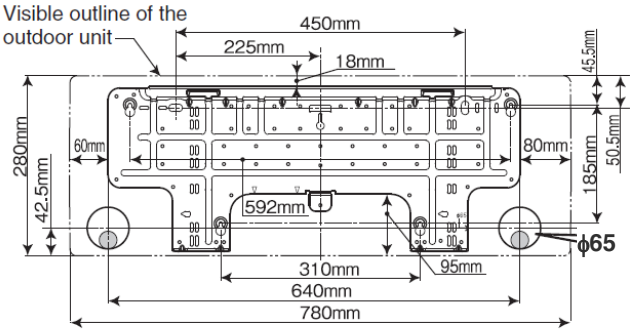

Applicable models

RAK-18PEA	RAK-50PEA	RAK-35PSPA
RAK-25PEA	RAK-18PSPA	
RAK-35PEA	RAK-25PSPA	

■ Procedures of Installation and Precautions

- Procedures to fix the hanger

1. Drill holes on the wall

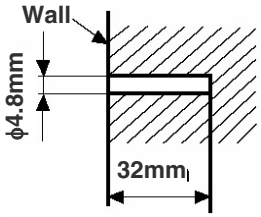

2. Push plug into the holes.

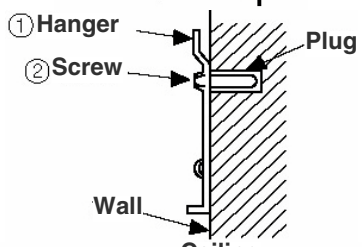

3. Fix the hanger on wall with 4.1 x 32 screws

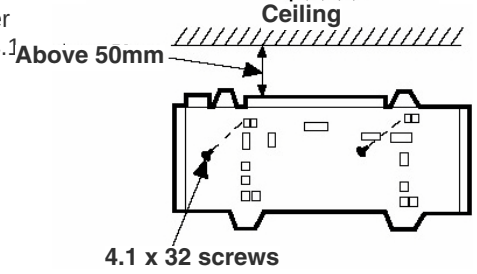

- Procedures to fix the holder of the remote control

1. Drill holes on wall 2. Push plug into holes

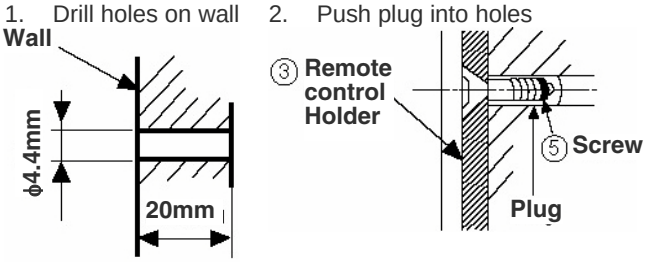

■ Wall Penetration and Installation of Protection Pipe

- Drill a 65mm hole on wall which is slightly tilted towards the outdoor side. Drill the wall at a small angle
- Cut the protection pipe according to the wall thickness
- Empty gap in the sleeve of protection pipe should be completely sealed with putty to avoid dripping of rain water into the room.

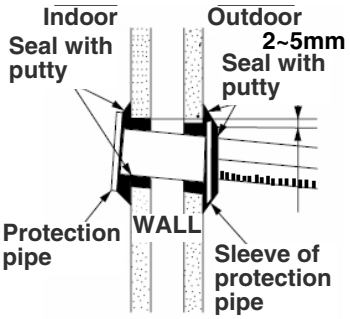

⚠ WARNING

- Be sure that the wire is not in contact with any metal in the wall. Please use the protection pipe as wire passing through the hollow part of the wall so as to prevent the possibility of damaged by mouse. Unless it seals completely, any air with high humidity flows from outdoor and dew may drop.

Installation of the Indoor Unit

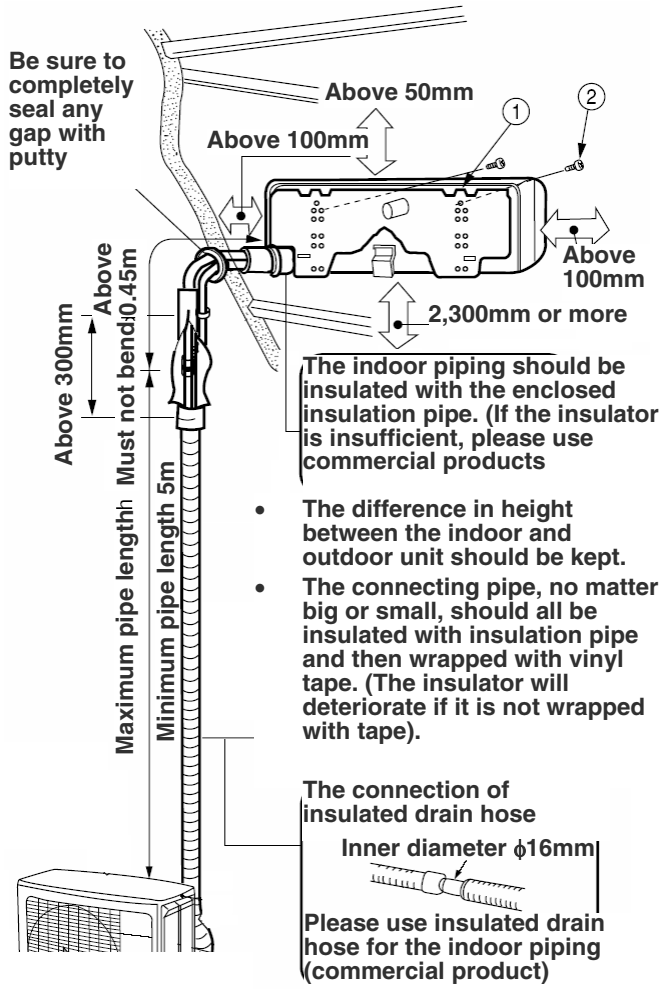

Models: Wall type	Maximum piping length (m)	Minimum piping length (m)	Maximum height (m)
RAK-18PSA	20	5	10
RAK-25PSA	20	5	10
RAK-35PSA	20	5	10
RAK-18PSAN	20	5	10
RAK-25PSAN	20	5	10
RAK-35PSAN	20	5	10
RAK-18PSPA	20	5	10
RAK-25PSPA	20	5	10
RAK-35PSPA	20	5	10
RAK-18QXA	Refer to Outdoor	5	Refer to Outdoor
RAK-25QXA		5	
RAK-35QXA		5	
RAK-50QXA		5	
RAK-18QPA		5	
RAK-25QPA		5	
RAK-35QPA		5	
RAK-50QPA		5	
RAK-25PXA	20	5	10
RAK-35PXA	20	5	10
RAK-50PXA	30	5	10
RAK-18PPA	20	5	10
RAK-25PPA	20	5	10
RAK-35PPA	20	5	10
RAK-50PPA	20	3	10
RAK-60PPA	30	3	20
RAK-70PPA	30	3	20
RAK-18PEA	20	5	10
RAK-25PEA	20	5	10
RAK-35PEA	20	5	10
RAK-50PEA	20	5	10

■ Vertically Downward Piping

Preparation

- Connect the connecting cord
- Pull out the pipe, connecting cord and drain hose.

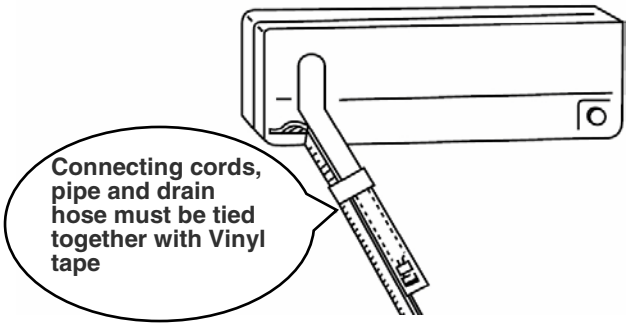

Installation

- The upper part of the Indoor unit is hung on the hanger
- The projection at the lower part of the Indoor unit is hooked onto the hanger.

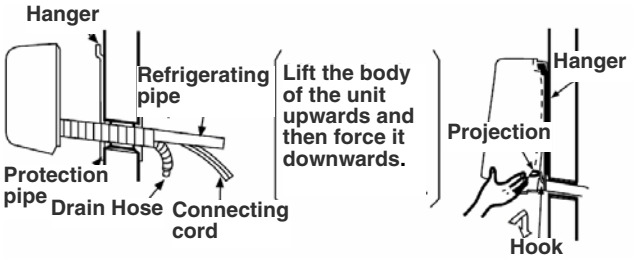

① CAUTION

Please pull the lower part of the indoor unit outwards to check if the unit is hooked onto the hanger. Improper installation may cause vibration and noise.

How to remove indoor unit

- Push up the (PUSH) sections at the bottom of the indoor unit and pull the bottom plate towards you. Then the claws are released from the stationary plate. The (Push) sections are indicated by 2 arrows in figure.

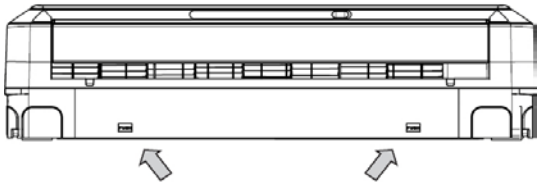

[Push] marks position

■ Horizontal Piping

Preparation

Change of Drain Hose and Installation Procedures

- Exchange the location of drain hose and drain cap during horizontal piping as shown in figure below. Be sure to plug in the drain hose until the insulation material folds upon itself.

Please use pliers to pull out the drain cap.

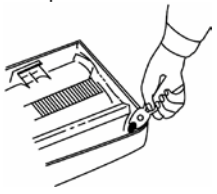

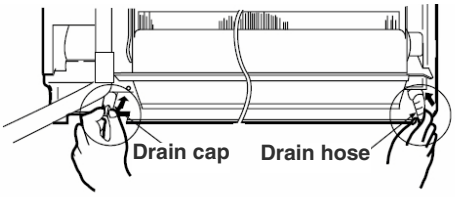

Condensed water may leak out if not inserted

① CAUTION

- Condensed water may leak out if not inserted properly.

■ Horizontal & Downward Piping-Making Openings

- During horizontal or downward piping, use a knife to cut openings as shown in figure. Then remove the sharp edges of openings with a file.

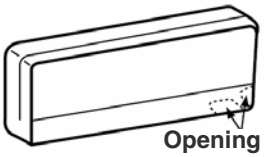

- Turn the piping while holding down the lower

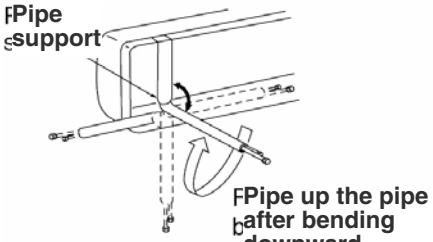

portion of pipe-support

Installation of Refrigerating Pipes after Connection

- The refrigerating pipes should be adjusted to fit into the hole on the wall and then ready for further connection.
- The terminals of 2 connected pipes must be covered with insulator used for terminal connection. Then the pipes are wrapped with insulation.
- Connect the connecting cord after removing electrical cover. (Refer to Chapter13 Electrical Wiring)

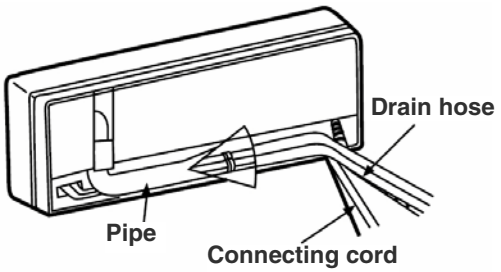

- After adjustment, fit the connecting cord and pipes into the space available under the indoor unit. Use holder to hold them tight
- Holder can be attached at the either of 2 places. Please select the easier position.

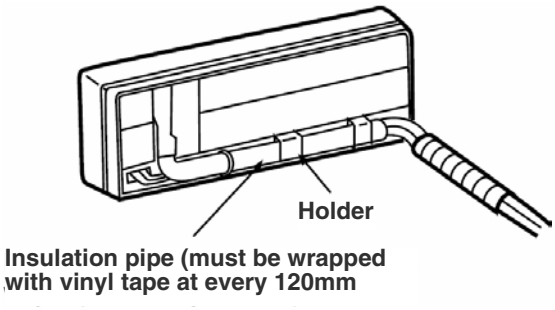

① CAUTION

- The rubber strap used for fixing the insulator should not be tied with great force. Otherwise, this will damage the heat insulation and causes water condensation.

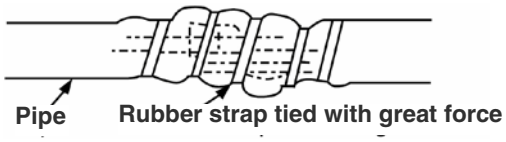

■ The Connection of Refrigerating Pipe during the Installation of Indoor unit

Preparation to Install Refrigerating Pipes

- The refrigerating pipes and connecting cord transform and are attached.
- The end of the refrigerating pipes are at locations marked with "▼" symbol

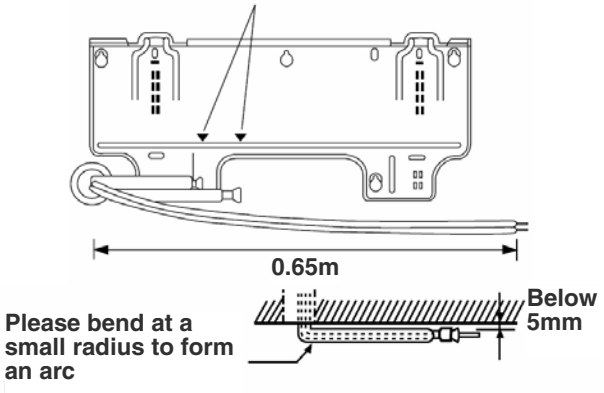

① CAUTION

- Please fix in the plastic core after flaring to avoid plastic chips entering the pipes.

Installation

- Hang the Indoor unit onto the hanger. Use the temporary stand at the back of the Indoor unit to push its lower part 15cm forwards.
- Place the drain hose through the hole on the wall
- Wrap the refrigerating pipes with insulation pipe after connecting refrigerating pipe.
- Connect the connecting cord after removing electrical cover.(Refer to Chapter13 Electrical Wiring)
- After adjustment, the connecting cord and refrigerating pipes are placed into the space available under the Indoor unit.
- The projection of Indoor Unit must hook to the hanger

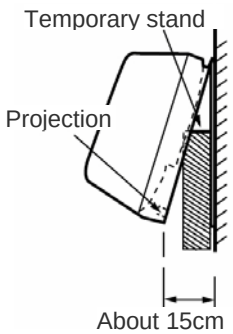

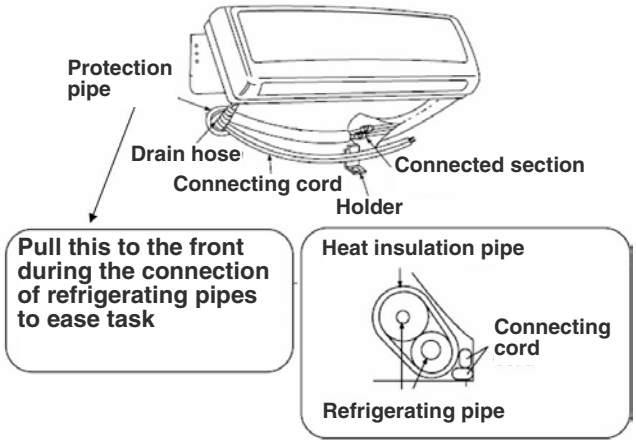

Installation of drain hose

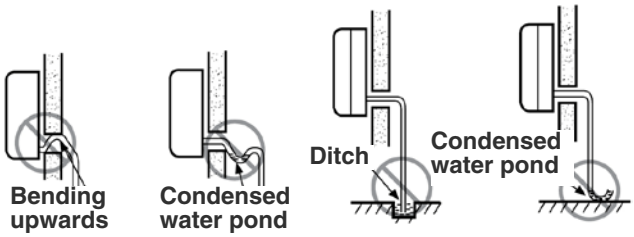

① CAUTION

- Be sure that the drain hose is not loosely connected or bend.
- You are free to choose the side (left or right) for the installation of drain hose. Please ensure the smooth flow of condensed water of the Indoor unit during installation. (Carelessness may result in water leakage.)

Direction of Piping

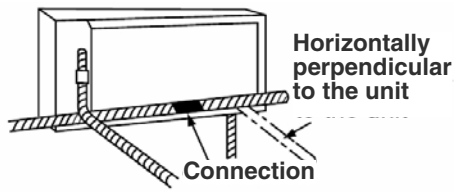

There are 6 directions allowed, namely,

- horizontally perpendicular to the unit
- vertically down from right
- horizontally out from right
- horizontally out to left
- horizontally out to right
- vertically down from left

⚠ CAUTION

- Don't form the piping downward at the left of the unit.

Models: Wall type	Piping direction
RAK-18PSA	6
RAK-25PSA	6
RAK-35PSA	6
RAK-18PSAN	6
RAK-25PSAN	6
RAK-35PSAN	6
RAK-18PSPA	6
RAK-25PSPA	6
RAK-35PSPA	6
RAK-18QXA	6
RAK-25QXA	6
RAK-35QXA	6
RAK-50QXA	6
RAK-18QPA	6
RAK-25QPA	6
RAK-35QPA	6
RAK-50QPA	6
RAK-25PXA	6
RAK-35PXA	6
RAK-50PXA	6
RAK-18PPA	6
RAK-25PPA	6
RAK-35PPA	6
RAK-50PPA	6
RAK-60PPA	6
RAK-70PPA	6
RAK-18PEA	6
RAK-25PEA	6
RAK-35PEA	6
RAK-50PEA	6

10.1.2 INSTALLATION OF FLOOR TYPE INDOOR (RAF-QXA, RAF-PXA)

Please read the safety precautions carefully before operating the unit. The contents of this section are vital to ensure safety. Please pay special attention to the following signs.

⚠WARNING Incorrect methods of installation may cause death or serious injury

⚠CAUTION Improper installation may result in serious consequences.

⏚ Make sure to connect earth wire

⊘ This sign indicates prohibition

Be sure that the unit operates in proper condition after installation. Explain to customer the proper way of operating the unit as described in the user's guide.

⚠ WARNING

- Please request your sales agent or qualified technician to install your unit. Water leakage, short circuit of fire may occur if you do the installation work yourself.
- Please observe the instructions stated in the installation manual during the process of installation. Improper installation may cause water leakage, electric shock and fire.
- Make sure that the units are mounted at locations which are able to provide full support of the weight of the units. If not, the units may collapse and impose danger.
- Observe the rules and regulations of the electrical installation and the methods described in the installation manual when dealing with the electrical work. Use power cables approved by the authorities of your country.
- Be sure to use the specified wire for connecting the indoor and outdoor units. Please ensure that the connections are tight after the conductors of the wire are inserted into the terminals. Improper insertion and loose contact may cause over-heating and fire.
- Please use the specified piping set for the correct refrigerant gas. Otherwise, this may result in broken copper pipes or faults
- When installing or removing an air conditioner, don not allow air or moisture to remain in the refrigeration cycle. Otherwise, pressure in the refrigeration cycle may become abnormally high may cause a rupture.
- Be sure to ventilate fully in case refrigerant gas leaks while at work. If the refrigerant gas comes into contact with fire, poisonous gas might be discharged.
- After completion of installation work, check to make sure that there is no refrigeration gas leakage. If the refrigerant gas leaks into the room, coming into contact with fire in a fan-driver heater, space heater, etc; poisonous gas may be emitted.
- Unauthorized modifications to the air conditioner may be dangerous. If a breakdown occurs, please contact a qualified air conditioner technical or electrician. Improper repairs may result in water leakage, electric shock and fire.
- Be sure to connect the earth wire from power supply wire to the outdoor unit and between the outdoor and indoor unit. Improper grounding may cause electric shock. ⏚

① CAUTION

- A circuit breaker or fuse must be installed. Without a circuit breaker or fuse, the danger of electric shock exists. A main switch with a contact gap of more than 3.5mm has to be installed in the power supply line to the outdoor unit.
- Do not install the unit near a location where there is a flammable gas. The indoor unit may catch fire if flammable gas leaks around it.
- Be sure to tighten the flare nut to the specified torque using a torque wrench. If the flare nut is tightened excessively, it may crack as time elapses, causing the refrigerant leakage.
- Please ensure smooth flow of water when installing the drain hose.
- Piping shall be suitable supported with a maximum spacing of 1m between supports
- An IEC approved power cord should be used. Power cord type: NYM.

① WARNING

- The unit should be mounted at stable, non-vibratory location which can provide full support to the unit.

① CAUTION

- No nearby heat source and no obstruction near the air outlet is allowed.
- The clearance distances from top right and left are specified in figure below.
- The location must be convenient for water drainage and pipe connection with the Outdoor unit.
- To avoid interference from noise, please place the unit and its remote controller at least 1m from the radio, television and inverter type fluorescent lamp.
- To avoid any error in signal transmission form the remote controller, please put the controller far away from high-frequency machines and high-power wireless systems.

Indoor unit installation

The space indicated by an arrow is to guarantee the performance of the air conditioner. Install the apparatus at the ample space in order to carry out the maintenance and repair works.

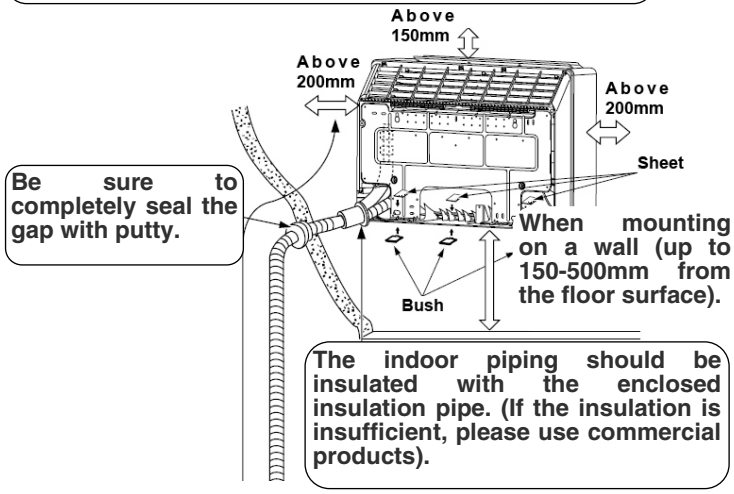

Models: Floor type	Maximum piping length (m)	Minimum piping length (m)	Maximum height (m)
RAF-25PXA	10	5	20
RAF-35PXA	10	5	20
RAF-50PXA	10	5	30

Installation of wall penetration and installation of protection pipe

1. Hole position

Make a hole on the wall such the position as shown below, in order to keep the flow for condensed water smooth.

Hole position

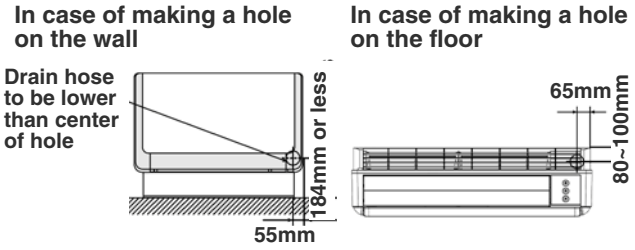

2. Wall penetration and installation of protection pipe

Drill a Φ65mm hole on wall which is slightly tilted towards the outdoor side. Drill the wall at a small angle.
Cut the protection pipe according to the wall thickness.
Empty gap in the sleeve of protection pipe should be completely sealed with putty to avoid dripping of rain water into the room.

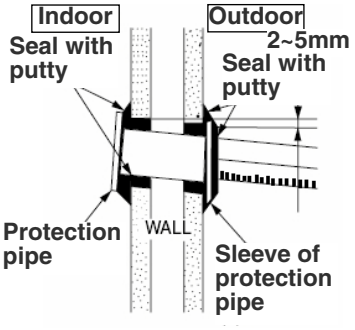

① CAUTION

- Be sure that the wire is not in contact with any metal in the wall. Please use the protection pipe as wire passing through the hollow part of the wall so as to prevent the possibility of damaged by mouse.

Installation of the indoor unit

1. How to remove the front cover

Please refer to section for details.

Removal and installation of front cover

Screw (3 pieces)

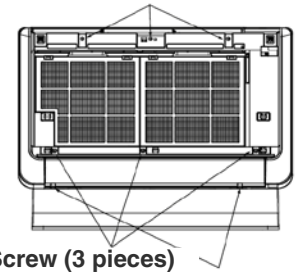

Screw (3 pieces)

Screw (2 pieces)

If there is a baseboard

If there is a baseboard 5~15mm in thickness and 115mm or less in height, cut the pipe bushing to conform to the baseboard.

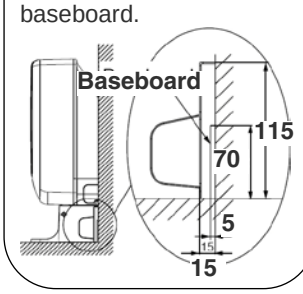

For sideways piping

For right sideways piping, cut the stand's bushing with a plastic cutter or similar tool and use a file for an attractive finish

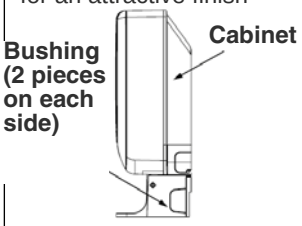

For floor piping

For floor piping, cut the front cover bushing with a plastic cutter or similar tool and use a file for an attractive finish.

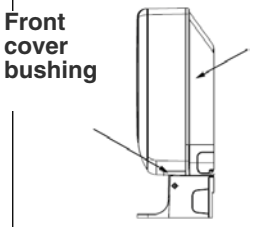

2. Drain pipe

Make sure drain pipe slopes downward so that drain flows smoothly without being trapped in the middle.

The drain hose (connecting port outer diameter: 16mm or 20mm, length: 500mm) is included in the indoor unit.

Prepare a drain pipe as shown in the following figure.

To prevent condensation, the indoor drain pipe should be covered with heat insulation material with a thickness of more than 10mm.

After piping is completed, check to make sure that drain discharges smoothly. Seal the drain pipe tightly with tape to keep dirt out.

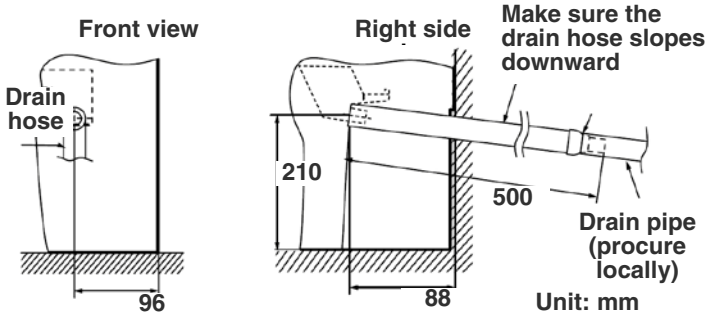

3. Connecting the pipe to indoor unit

Draw in the pipes through the hole of the wall or the floor to indoor.

Arrange he pipe shown below. In the case that large pipe and small pipe arrange to make in front and behind.

The indoor piping should be insulated with the enclosed insulation pipe.

The pipe should first be cut longer than the length shown below.

The excess section of the pipe should be cut off during pipe connection.

- In the case of make a hole on the floor	- In the case of make a hole on the wall

(Unit: mm)

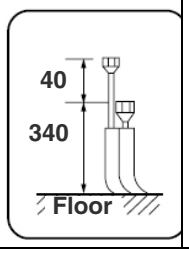

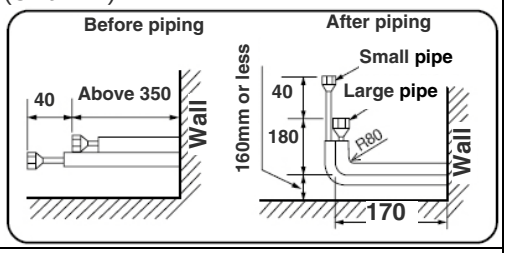

- Sideways piping

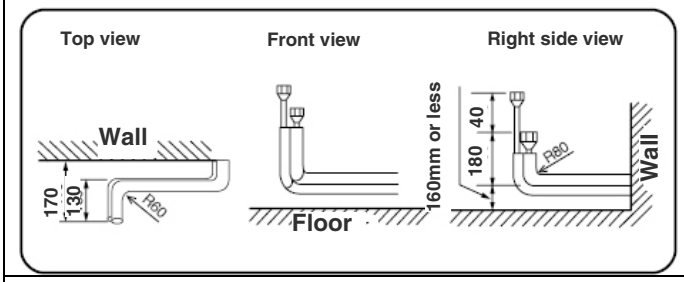

Remove PIPE SUPPORT.

Insert the drain hose into the hole in the wall.

Winding insulation pipe for drain hose and taping 4 or 5 places to fix.

Connect the pipe to the indoor unit.

After completing the piping connection, cover the connector with the insulator.

Connect the cord (follow instructions in the section "Connection of the connecting cord" on the reverse of this sheet).

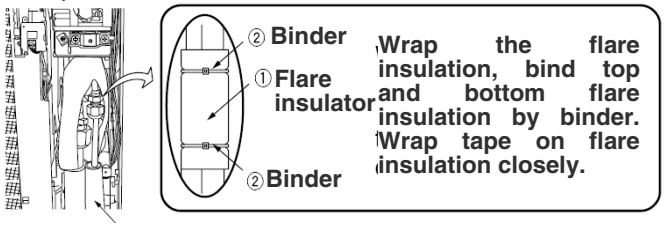

- Since there is some space between PIPE SUPPORT and the pipe, affix the insulator ⑩ to the PIPE SUPPORT. As shown in the figure below, affix the insulator ⑩ to the PIPE SUPPORT to sandwich it.

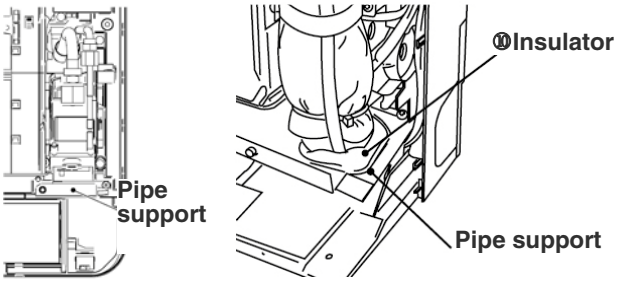

- After connecting the pipes and connecting cord, be sure to screw PIPE SUPPORT tightly and fix the pipes and connecting cord.

Hook the PIPE SUPPORT tab in the square hole.

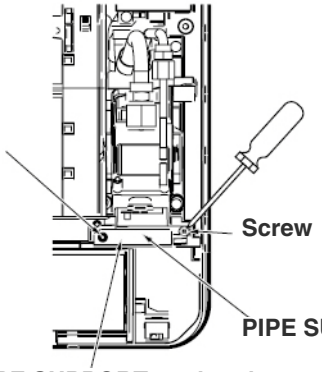

Mount PIPE SUPPORT so that the cylindrical portion of the drain pan passes through its hole and sucure it with screws located at the right back corner.

- Position the easy-to-attach side of PIPE SUPPORT (after aligning it with the pipe) to face the front and secure it with a screw. (Be sure to install PIPE SUPPORT to prevent rodents from entering the indoor unit.)
- To prevent the pipe connector from contacting the front cover, push the connector as fsr as it goes.
- Arrange the connecting cord, pipes and drain hose neatly and store them in the bottom section of the rear surface of the indoor unit.

- Pipe layout of the unit rear surface

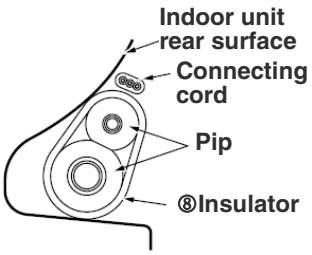

- Pipe/drain hose layout when passing through the file in a wall

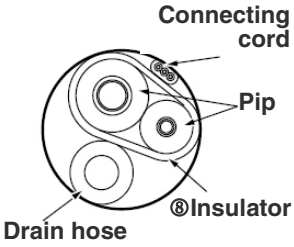

ⓘ CAUTION

- When mounting the flare insulator ①, make sure there is a space between the insulator and left of resin part. Otherwise, may cause water dripping.

Fixing the indoor unit

1. Floor installation

a. Drill holes on wall (As shown below)

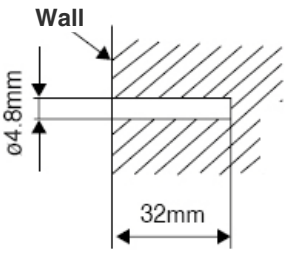

b. Push plug into the holes (As shown below)

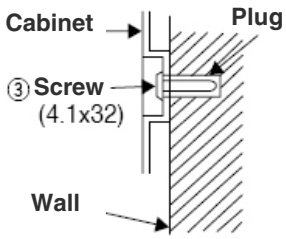

Fixing on the wall

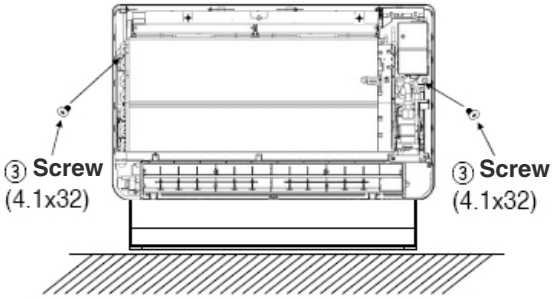

Fixing on the hanger

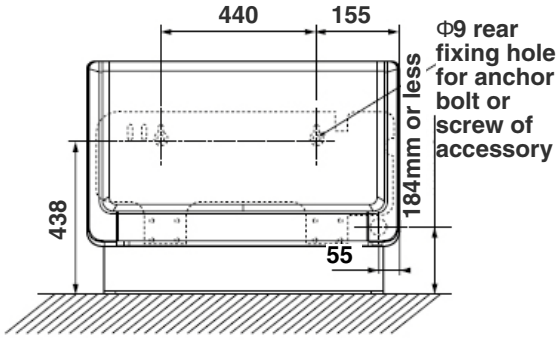

Fixing the base of indoor unit

- **Fix the base of indoor unit on the floor with 4.1x3.2mm screws (right and left).**
- **When fixing the indoor unit above the ground, be sure to fix an L-angle at the bottom to support it.**

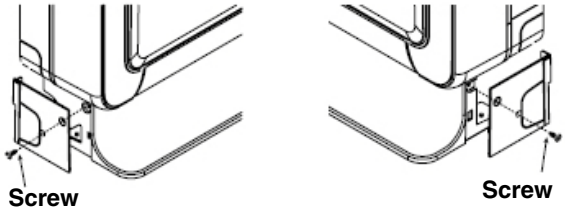

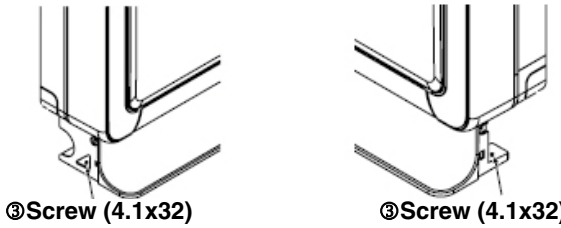

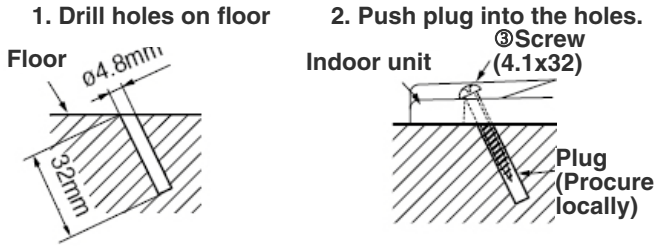

(The plug can be secured diagonally with a screw as shown above.)

① WARNING

- Be sure to attach screw ③ to prevent the indoor unit from overturn.

2. Wall installation

Direct mounting on the wall

- Please remove 3 screws and clip which fix to the stand and cabinet. (As shown in the figure below)

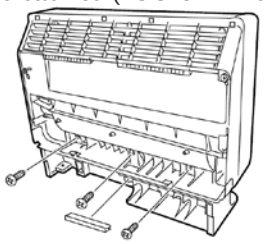

- Please remove the screws which fix the cabinet and hanger.
- Please use hidden beams in the wall to hold the hanger.

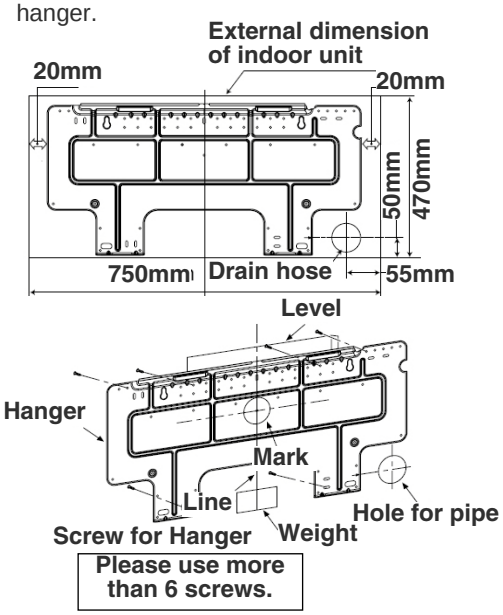

ⓘ CAUTION

- The draining of the water container inside the indoor unit can be done from the left. Therefore the hanger must be fixed horizontally or slightly tilted towards the side of drain hose. Otherwise, condensed water may overflor the water container.

❖ **Procedure of installation and precautions.**

Procedure to fix the hanger and indoor unit.

1. Drill holes on wall (As shown below)

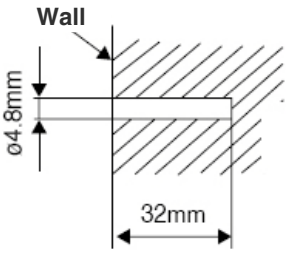

2. Push plug into the holes (As shown below)

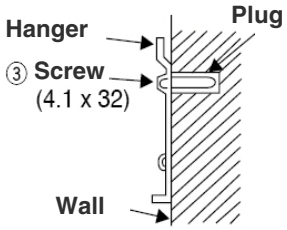

3. Fix the hanger on wall with 4.1x32 and 4.0x34 screw. (As shown in figure below)

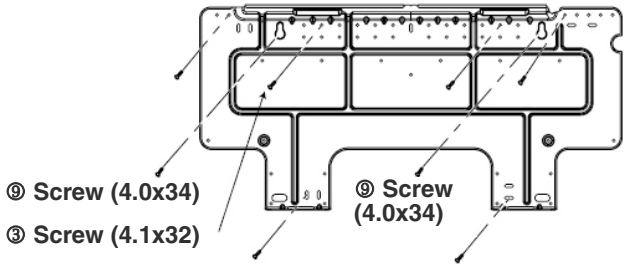

4. Fix the indoor unit on the wall with 4.1x32 screw.

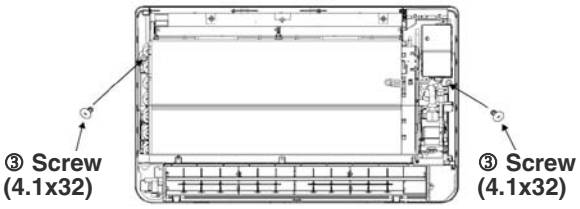

3. Built-in installation

- If outlet is covered with the lattice door, room temperature may not be controlled properly. Therefore, air outlet must be open as much as possible.
- If air deflector of air outlet is adjusted too much upward, room temperature may not be controlled properly due to the heat inside the lattice door. Therefore, the deflector must be adjusted to nearly horizontal angle.
- If signal receiver is covered with the lattice door, signal receiving distance or range (angle) becomes smaller. Therefore, single receiver must not be covered with the lattice door.
- Only the vertical lattice door may be used. Besure to use a lattice door with an open area ratio of 75% or more. If another lattice door or one with an open area ratio of less than 75% is used, maximum performance may not be obtained.
- With a built-in installation, it may take more time to reach the set temperature after the unit is switched on.

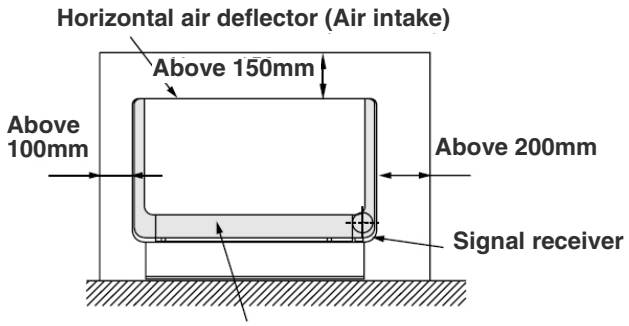

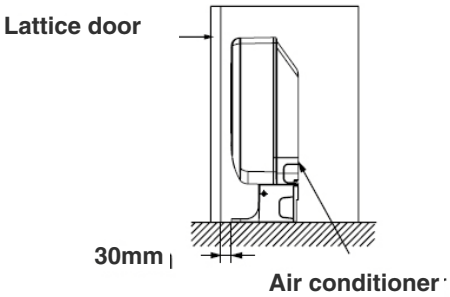

4. Checking of drawing drain hose

- Connect the separate drain hose to the drain hose that is attached to the indoor unit.
- For keeping the smooth flowing of condensed water the drain hose should be inclined as shown in figure below.

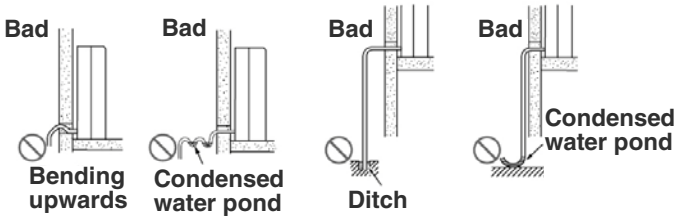

ⓘ WARNING

- Be sure that the hose is not loosely connected or bent.

ⓘ CAUTION

- Please ensure the smooth flow of condensed water of the indoor unit during installation. (Carelessness may result in water leakage.)

10.1.3 INSTALLATION OF FLOOR TYPE INDOOR (RAF-RPA)

Please read the safety precautions carefully before operating the unit. The contents of this section are vital to ensure safety. Please pay special attention to the following signs.

ⓘWARNING Incorrect methods of installation may cause death or serious injury

ⓘCAUTION Improper installation may result in serious consequences.

⏚ Make sure to connect earth wire

⃠ This sign indicates prohibition

Be sure that the unit operates in proper condition after installation. Explain to customer the proper way of operating the unit as described in the user's guide.

ⓘ WARNING

- Please request your sales agent or qualified technician to install your unit. Water leakage, short circuit of fire may occur if you do the installation work yourself.
- Please observe the instructions stated in the installation manual during the process of installation. Improper installation may cause water leakage, electric shock and fire.
- Make sure that the units are mounted at locations which are able to provide full support of the weight of the units. If not, the units may collapse and impose danger.
- Observe the rules and regulations of the electrical installation and the methods described in the installation manual when dealing with the electrical work. Use power cables approved by the authorities of your country.
- Be sure to use the specified wire for connecting the indoor and outdoor units. Please ensure that the connections are tight after the conductors of the wire are inserted into the terminals. Improper insertion and loose contact may cause over-heating and fire.
- Please use the specified piping set for the correct refrigerant gas. Otherwise, this may result in broken copper pipes or faults
- When installing or removing an air conditioner, don not allow air or moisture to remain in the refrigeration cycle. Otherwise, pressure in the refrigeration cycle may become abnormally high may cause a rupture.
- Be sure to ventilate fully in case refrigerant gas leaks while at work. If the refrigerant gas comes into contact with fire, poisonous gas might be discharged.
- After completion of installation work, check to make sure that there is no refrigeration gas leakage. If the refrigerant gas leaks into the room, coming into contact with fire in a fan-driver heater, space heater, etc; poisonous gas may be emitted.
- Unauthorized modifications to the air conditioner may be dangerous. If a breakdown occurs, please contact a qualified air conditioner technical or electrician. Improper repairs may result in water leakage, electric shock and fire.
- Be sure to connect the earth wire from power supply wire to the outdoor unit and between the outdoor and indoor unit. Improper grounding may cause electric shock. ⏚

⚠ CAUTION

- A circuit breaker or fuse must be installed. Without a circuit breaker or fuse, the danger of electric shock exists. A main switch with a contact gap of more than 3.5mm has to be installed in the power supply line to the outdoor unit.
- Do not install the unit near a location where there is a flammable gas. The indoor unit may catch fire if flammable gas leaks around it.
- Be sure to tighten the flare nut to the specified torque using a toque wrench. If the flare nut is tightened excessively, it may crack as time elapses, causing the refrigerant leakage.
- Please ensure smooth flow of water when installing the drain hose.
- Piping shall be suitable supported with a maximum spacing of 1m between supports
- An IEC approved power cord should be used. Power cord type: NYM.

The choice of mounting site

⚠ WARNING

- The unit should be mounted at stable, non-vibratory location which can provide full support to the unit.

⚠ CAUTION

- No nearby heat source and no obstruction near the air outlet is allowed.
- The clearance distances from top right and left are specified in figure below.
- The location must be convenient for water drainage and pipe connection with the Outdoor unit.
- To avoid interference from noise, please place the unit and its remote controller at least 1m from the radio, television and inverter type fluorescent lamp.
- To avoid any error in signal transmission form the remote controller, please put the controller far away from high-frequency machines and high-power wireless systems.

Indoor unit installation

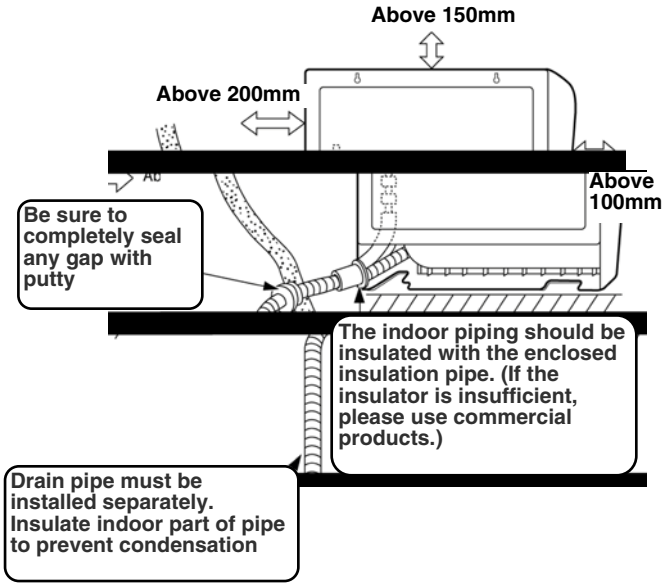

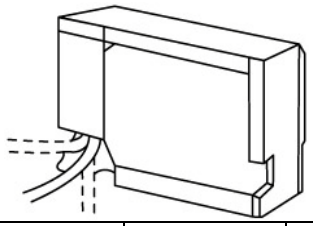

Piping configuration may be in three different directions: direct rear piping, right downward piping and right sideway piping.

Model Floor Type	Maximum piping length (m)	Minimum piping length (m)	Maximum height (m)
RAF-25RPA	10	5	20
RAF-35RPA	10	5	20
RAF-50RPA	10	5	20

Installation of wall penetration and installation of protection pipe

1. Hole position
   - Make a hole on the wall such as the position shown below, in order to keep the flow for condensed water smooth

Hole position

In case of making a hole on the wall

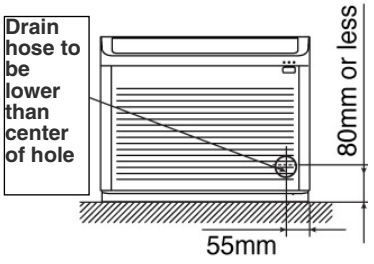

In case of making a hole on the floor

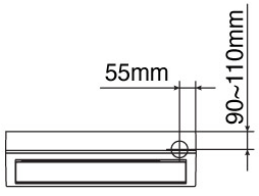

2. Wall Penetration and Installation of Protection Pipe
   - Drill an Ø65mm hole on wall which is slightly tilted towards the outdoor side. Drill the wall at a small angle
   - Cut the protection pipe according to the wall thickness
   - Empty gap in the sleeve of protection pipe should be completely sealed with putty to avoid dripping of rain water into the room.

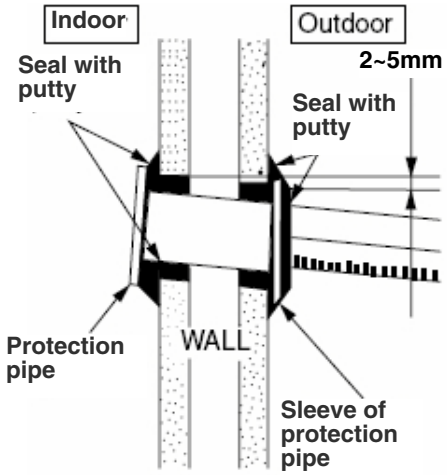

⚠ WARNING

- Be sure that the wire is not in contact with any metal in the wall. Please use the protection pipe as wire passing through the hollow part of the wall so as to prevent the possibility of damaged by mouse. Unless it seals completely, any air with high humidity flows from outdoor and dew may drop.

Installation of the indoor unit

■ How to remove the front cover

1. Remove the front panel (refer to instructions on the reverse of this sheet)
2. Remove the front cover
   - Remove the two bottom screws and two top screws. Pull the front cover approximately 30mm towards you.

※ When attaching the front cover, follow the above procedure in reverse order. Make sure the hooks at the front cover top surface are securely inserted into the cabinet.

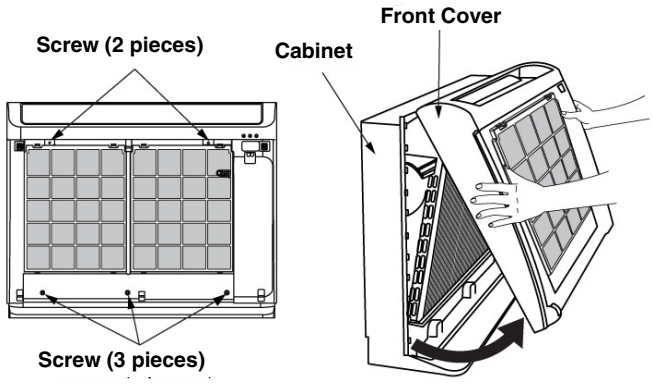

- If there is a baseboard

If the baseboard is 5~15mm in thickness or 70~130mm in height, cut the pipe bushing to conform to the baseboard.

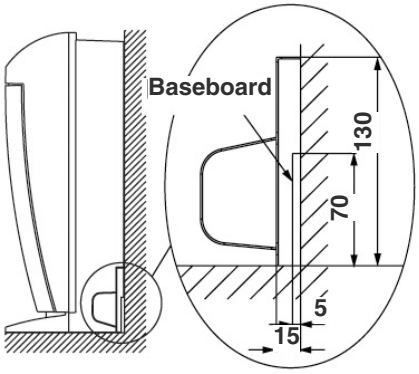

For sideways piping

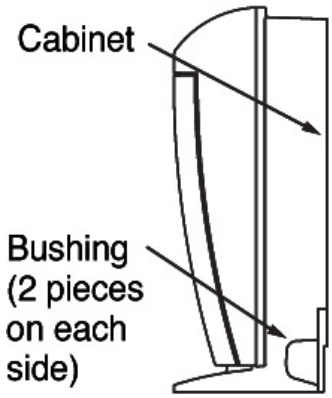

For right or left sideways piping, cut the cabinet's bushing with a plastic cutter or similar tool and use a file for an attractive finish.

Connecting the pipe to indoor unit

- Draw in the pipes through the hole of the wall or the floor to indoor.
- Arrange the pipe shown below. In the case that large pipe and small pipe arrange to make in front and behind.
- The indoor piping should be insulated with the enclosed insulation pipe.
- The pipe should first be cut longer than the length shown below.
- The excess section of the pipe should be cut off during pipe connection.
- In the case of make a hole on the floor

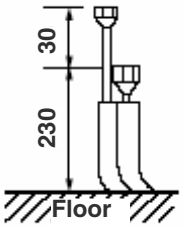

- In case of make a hole on the wall

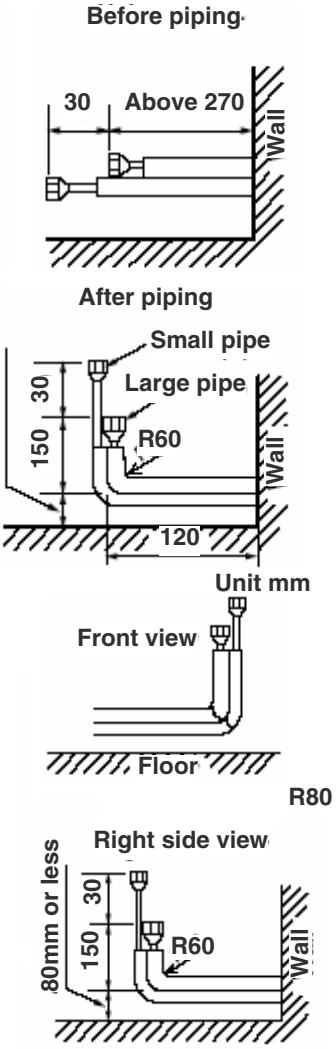

- **Sideways piping**

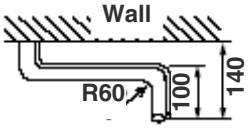

① WARNING

- For sideways piping, do not install the drain hose sideways. Connect the drain hose so that it comes out directly.
- Sideways installation of the drain hose will prevent it from sloping downward, causing water leakage. To avoid dripping, make sure to pass the drain hose under the pipe.
- Remove the PIPE SUPPORT.
- Insert the drain hose into the hole in the wall.
- Winding insulation pipe for drain hose and taping 4 or 5 places to fix.
- Connect the pipe to the indoor unit
- After completing the piping connection, cover the connector with a insulator

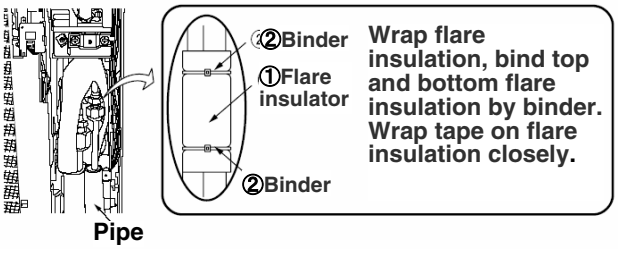

- Since there is some space between PIPE SUPPORT and the pipe, affix the insulator ⑩ to the PIPE SUPPORT. As shown in the figure below, affix the insulator ⑩ to the PIPE SUPPORT to sandwich it.

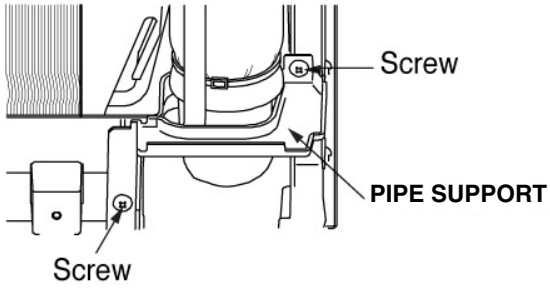

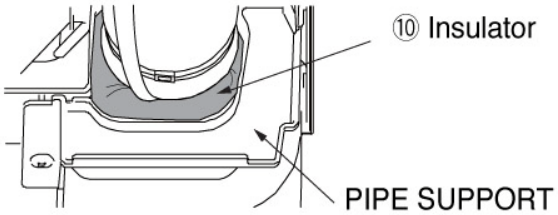

- After connecting the pipes and connecting cord, be sure to screw PIPE SUPPORT, tightly and fix the pipes and connecting cord.
- Position the each-to-attach side of PIPE SUPPORT (after aligning it with the pipe) to face the front and secure it with a screw. (Be sure to install PIPE SUPPORT to prevent rodents from entering the indoor unit).

① CAUTION

- When mounting the flare insulator ①, make sure there is a space between the insulator and left of resin part. Otherwise, may cause water dripping.
- To prevent the pipe connector from contacting the front cover, push the connector as far as it goes.
- Arrange the connecting cord, pipes and drain hose neatly and store them in the bottom section of the rear surface of the indoor unit

Pipe layout of the unit rear surface

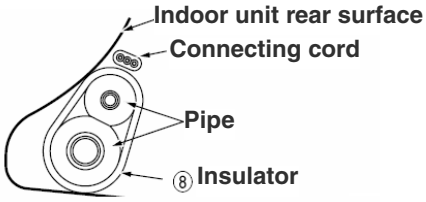

Pipe/drain hose layout when passing through the file in a wall.

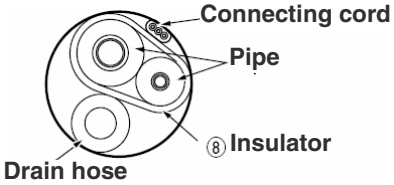

■ **Fixing the indoor**

Fixing the top of indoor unit

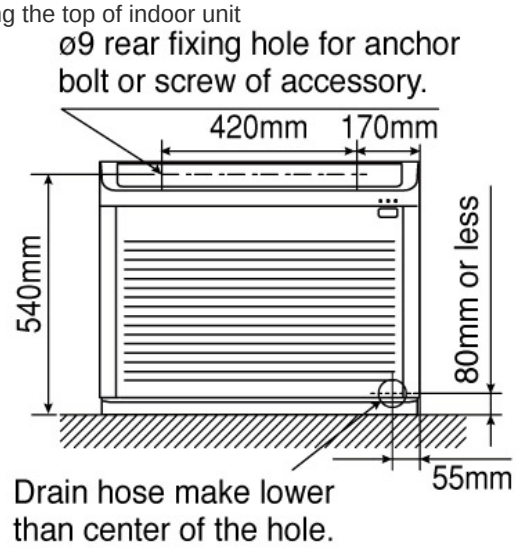

① WARNING

- Even if there is space between the indoor unit and the back wall, make sure to securely attach the indoor unit to the wall, ceiling or floor using wire to prevent it from falling.
- In the case of fixing by the anchor bolt, bury the Ø6 anchor bolt into the wall as shown in below. Lift up the indoor unit slightly and hang.
- In the case of fixing by screw of accessory
- Bury the plug into the wall as shown in below to attach the screw ⑨. Lift up the indoor unit slightly and hang.

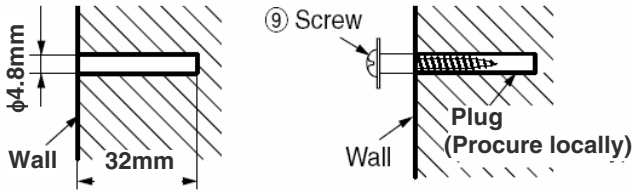

Fixing the base of indoor unit

- Fix the base of indoor unit on the floor with 4.1 x 63mm screws. (Right and left)

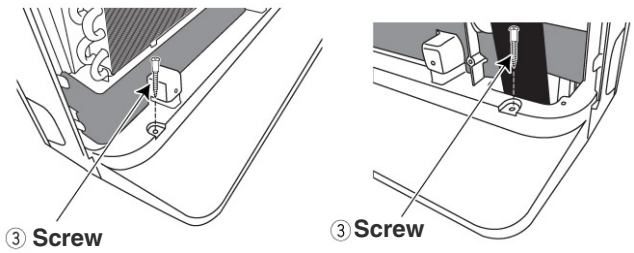

① WARNING

- Be sure to attach screw ③ to prevent the indoor unit from overturn.
- When fixing the indoor unit above the ground, be sure to fix an L-angle at the bottom to support it
- To drill holes, either Case 1 or 2 may be used.

1. Drill holes on floor.

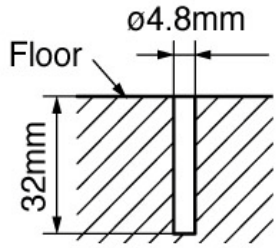

2. Push plug into the holes

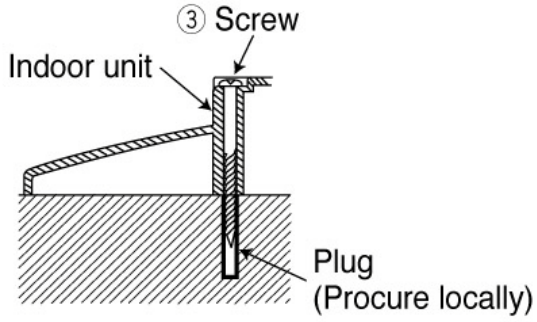

BUILT-IN INSTALLATION

①If upper or lower air outlet is covered with lattice door, room temperature may not be controlled properly. Therefore, air outlet must be opened as much as possible.

②If air deflector or upper air outlet is adjusted too much upward, room temperature may not be controlled properly due to the heat inside the lattice door. Therefore, the deflector must be adjusted to nearly horizontal angle.

③If signal receiver is covered with the lattice door, signal receiving distance or range (angle) becomes smaller. Therefore, signal receiver must not be covered with the lattice door.

④Only the vertical lattice door may be used. Be sure to use a lattice door with an open area ratio of 75% or more. If another lattice door or one with an open area ratio of less than 75 is used, maximum performance may not be obtained.

⑤With built-in installation it may take more time to reach the set temperature after the unit is switched on.

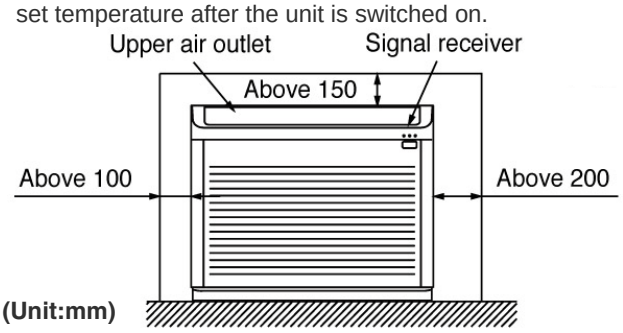

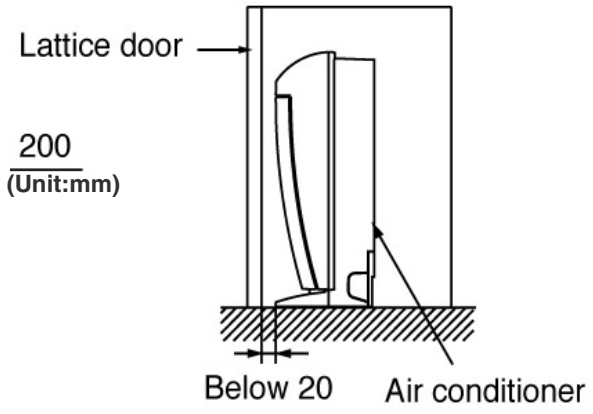

10.1.4 INSTALLATION OF 4 WAY CEILING CASSETTE TYPE INDOOR

Please read the safety precautions carefully before operating the unit. The contents of this section are vital to ensure safety. Please pay special attention to the following signs.

⚠WARNING Incorrect methods of installation may cause death or serious injury

⚠CAUTION Improper installation may result in serious consequences.

⏚ Make sure to connect earth wire

⊘ This sign indicates prohibition

Be sure that the unit operates in proper condition after installation. Explain to customer the proper way of operating the unit as described in the user's guide.

⚠ WARNING

- Please request your sales agent or qualified technician to install your unit. Water leakage, short circuit of fire may occur if you do the installation work yourself.
- Please observe the instructions stated in the installation manual during the process of installation. Improper installation may cause water leakage, electric shock and fire.
- Make sure that the units are mounted at locations which are able to provide full support of the weight of the units. If not, the units may collapse and impose danger.
- Observe the rules and regulations of the electrical installation and the methods described in the installation manual when dealing with the electrical work. Use power cables approved by the authorities of your country.
- Be sure to use the specified wire for connecting the indoor and outdoor units. Please ensure that the connections are tight after the conductors of the wire are inserted into the terminals. Improper insertion and loose contact may cause over-heating and fire.
- Please use the specified piping set for the correct refrigerant gas. Otherwise, this may result in broken copper pipes or faults
- When installing or removing an air conditioner, don not allow air or moisture to remain in the refrigeration cycle. Otherwise, pressure in the refrigeration cycle may become abnormally high may cause a rupture.
- Be sure to ventilate fully in case refrigerant gas leaks while at work. If the refrigerant gas comes into contact with fire, poisonous gas might be discharged.
- After completion of installation work, check to make sure that there is no refrigeration gas leakage. If the refrigerant gas leaks into the room, coming into contact with fire in a fan-driver heater, space heater, etc; poisonous gas may be emitted.
- Unauthorized modifications to the air conditioner may be dangerous. If a breakdown occurs, please contact a qualified air conditioner technical or electrician. Improper repairs may result in water leakage, electric shock and fire.
- Be sure to connect the earth wire from power supply wire to the outdoor unit and between the outdoor and indoor unit. Improper grounding may cause electric shock. ⏚

⚠ CAUTION

- A circuit breaker or fuse must be installed. Without a circuit breaker or fuse, the danger of electric shock exists. A main switch with a contact gap of more than 3.5mm has to be installed in the power supply line to the outdoor unit.
- Do not install the unit near a location where there is a flammable gas. The indoor unit may catch fire if flammable gas leaks around it.
- Be sure to tighten the flare nut to the specified torque using a toque wrench. If the flare nut is tightened excessively, it may crack as time elapses, causing the refrigerant leakage.
- Please ensure smooth flow of water when installing the drain hose.
- Piping shall be suitable supported with a maximum spacing of 1m between supports
- An IEC approved power cord should be used. Power cord type: NYM.

The choice of mounting site

⚠ WARNING

- The unit should be mounted at stable, non-vibratory location which can provide full support to the unit.

⚠ CAUTION

- No nearby heat source and no obstruction near the air outlet is allowed.
- The clearance distances from top right and left are specified in figure below.
- The location must be convenient for water drainage and pipe connection with the Outdoor unit.
- To avoid interference from noise, please place the unit and its remote controller at least 1m from the radio, television and inverter type fluorescent lamp.
- To avoid any error in signal transmission form the remote controller, please put the controller far away from high-frequency machines and high-power wireless systems.
- The installation height of indoor unit must be 2.3m or more.

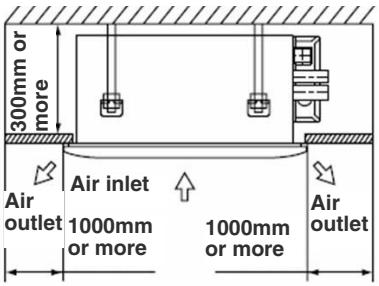

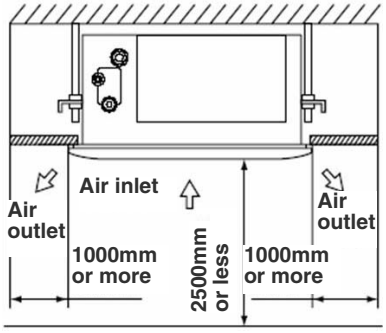

Opening on ceiling and suspension bolt

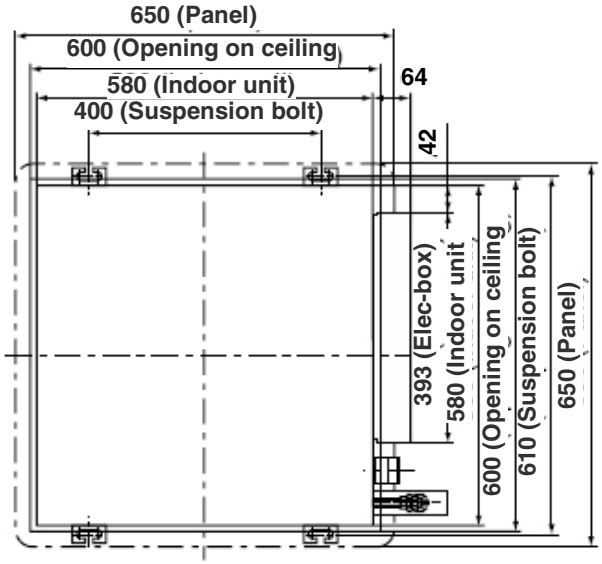

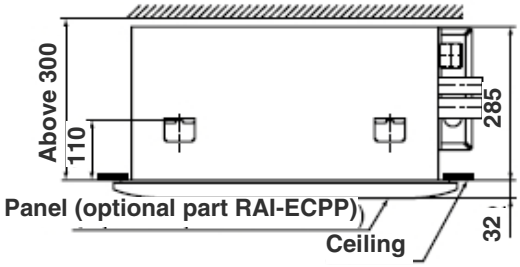

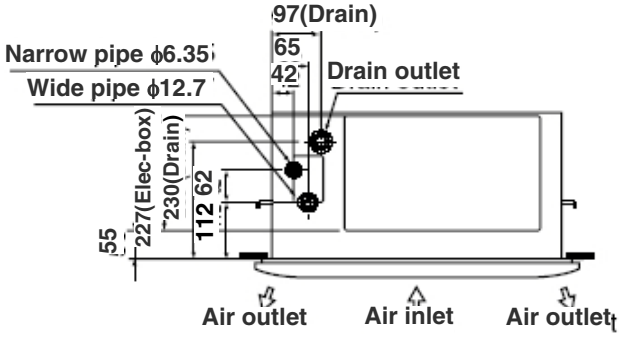

- Need a connecting work for refrigerant pipe, drain pipe and F cable in the ceiling after suspending the indoor unit. Arrange drain pipe, refrigerant pipe and F cable in their installation position.
- For finishing of opening on ceiling, arrange with builder in detail.
- If ceiling is already completed, connecting cables between indoor and outdoor, piping and drain piping must be done before fitting the indoor unit

Preparation for installing the indoor unit

Installation of suspension bolts

- Be sure to reinforce furring of ceiling (frame: ceiling joints and supporter) to maintain level of ceiling and prevent vibration of ceiling plate.
- Suspension bolts should be purchased in the field.
- Refer to the diagrams shown below for length of suspension bolts.

In case of wooden frame

60~90mm square piece of lumber

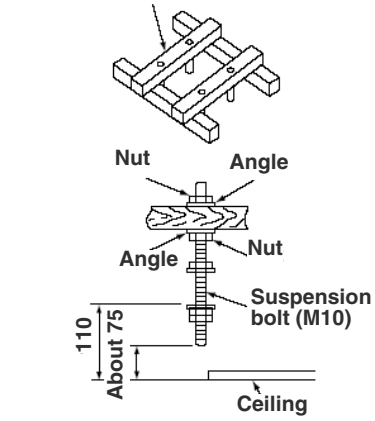

In case of steel frame

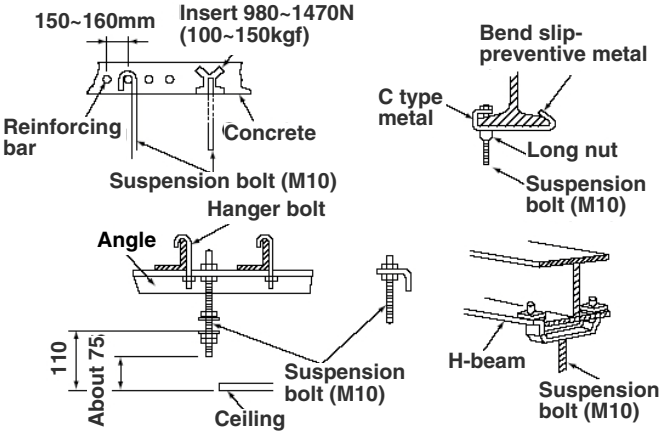

Wall Penetration and Installation of Protection Pipe

- Drill a ø65mm hole on wall watch which is slightly titled towards the outdoor side. Drill the wall at a small angle.
- Cut the protection pipe according to the wall thickness.
- Empty gap in the sleeve of protection pipe should be completely sealed with putty to avoid dripping of rain water into the room

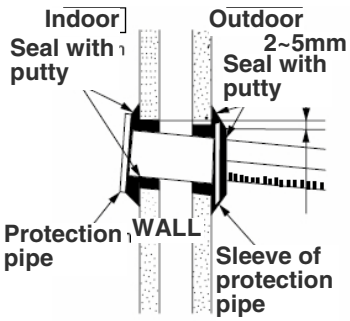

① CAUTION

- Be sure that the wire is not in contact with any metal in the wall. Please use the protection pipe as wire passing through the hollow part of the wall so as to prevent the possibility of damaged by rodents.

① WARNING

- Be sure to use protection pipe (commercial product). If the cables are touching metal body inside the wall or if the wall is hollow where rodents could damage the cables, this might cause electrical shock or fire. Incomplete sealing could also allow the high humid air from inside the wall or outside the room to leak in and cause water drip.

Installation of Indoor unit

- Set nut and washer on suspension bolt and hook it to suspension clamp by lifting the indoor unit.
- Suspension bolt must have play of 20~30 mm on its right and left. If free play is not enough, fix the lifting lug to suspension bolt without attaching nut underneath the suspension bolt, then attach nut and install indoor unit.
- Make sure that indoor unit is kept level using a levelling gauge

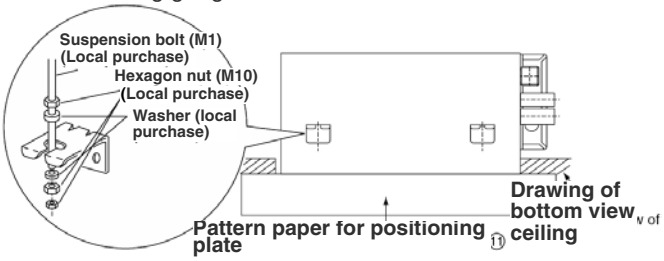

The space between bottom surfaces of ceiling and indoor unit

- Be sure to install the indoor units as follow position (1)

(1) Same level (draw in 0~2mm)

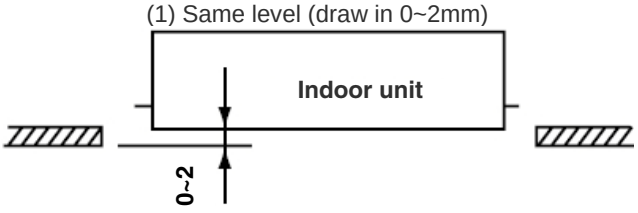

- Do not install the indoor units as follow position (2) or (3).

(2) Stick out above 0mm

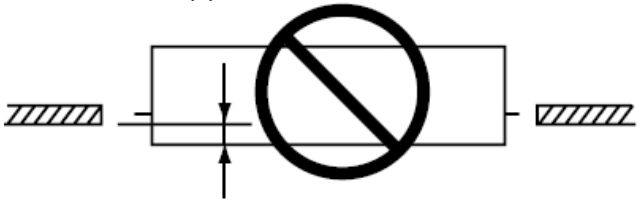

(3) Draw in above 3mm

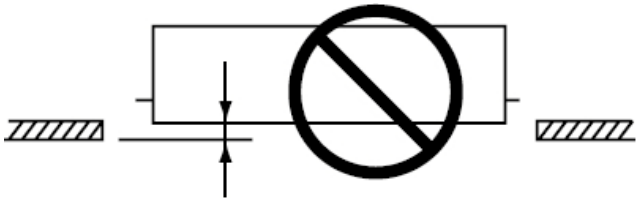

- Be sure that bottom face of indoor main unit is the same height (or expected height if the ceiling is yet to be constructed) as lower surface of the ceiling.

① CAUTION

- Be sure to install the indoor unit level. If the indoor unit is inclined, water may leak.
- If space between bottom surfaces indoor unit and ceiling is not correct, the may be a gap between the panel and indoor unit, causing condensed water to drip.
- If ceiling is constructing after the installation of air conditioner, be sure to attach a patter paper for installation that shows ceiling opening dimension.

Pattern paper for installation plate ⑫ Installation plate fixing screw ⑬

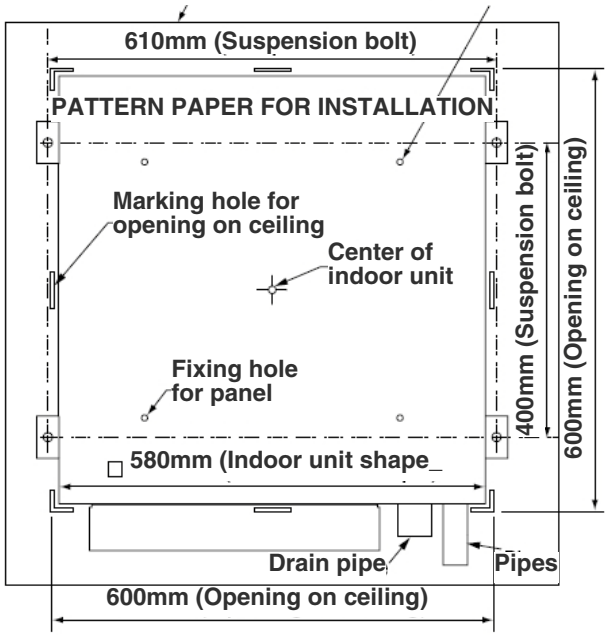

NOTE

Pease use this pattern paper to decide the suspension bolt position. Apply by putting the reverse side onto the ceiling surface

Selecting the Mounting Position

The installation place is very important for the air conditioner because it is very difficult to mover from one place to another after the first installation. Decide the mounting position together with the customer. The discharge direction can be selected as shown below.

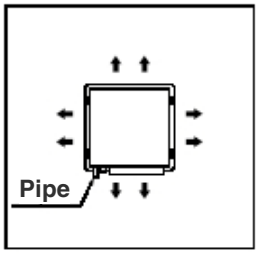

4 directions

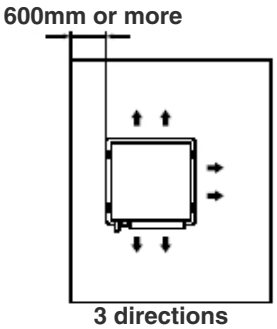

3 directions

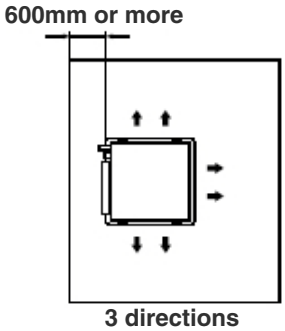

3 directions

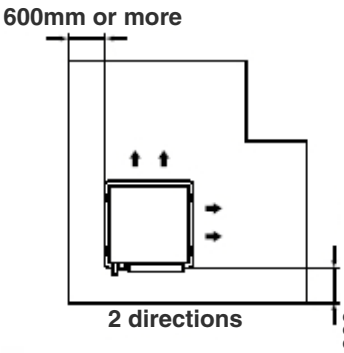

2 directions

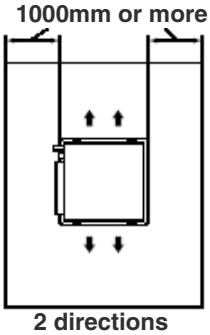

2 directions

① CAUTION

- Since 2-way outlet shown below cause performance problem, do not set it.

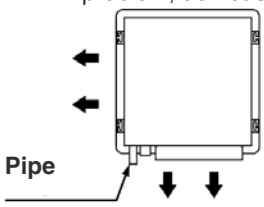

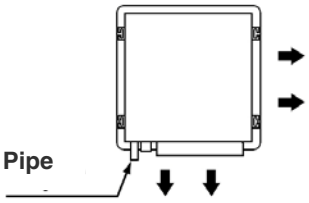

Blower cover installation

Install the blower cover only to the air outlet direction which is not in use.

Install the blower cover at the diffuser shown. Fix the blower cover securely.

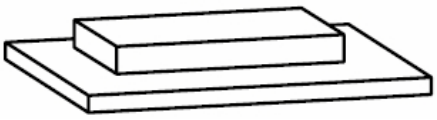

Corner seal installation

Install the corner seal at position shown. Fix the corner seal securely.

Shall be installed regardless to 2 directions, 3 directions or 4 directions.

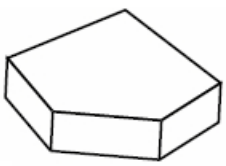

2 direction sample

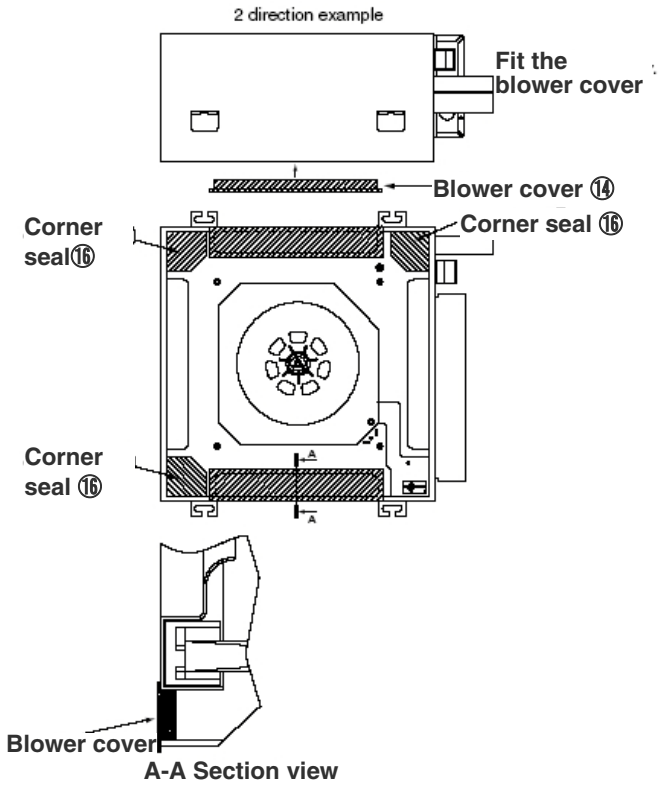

A-A Section view

Selecting the Air flow switch

1. Turn power off.
2. Remover cover of the electrical box
3. When selecting discharge direction of 2 directions or 3 directions, select the “AIR FLOW SELECTION” on the main PWB to 3 way.
   When selecting discharge direction to 4 directions, select the “AIR FLOW SELECTION” on the switch PWB to NORMAL.

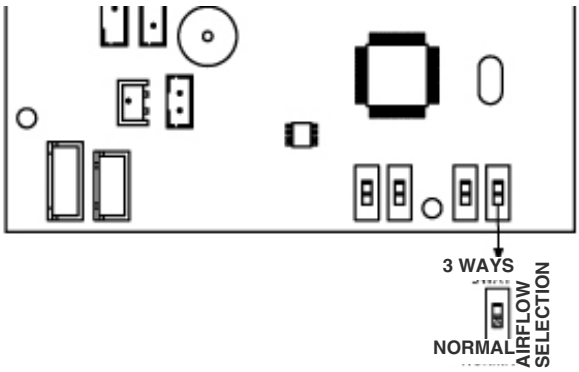

NOTE:
During 2 directions or 3 directions, sound level will increase.

Selecting the Air flow switch

1. Turn power off.
2. Remover cover of the electrical box
3. When install the indoor unit 2500mm or more form the floor, select the “STATIC PRESSURE SW” on the main PWB to HIGH PRESSURE

   When install the indoor unit below than 2500mm from floor, select the “STATIC PRESSURE SW” on the main PWB to NORMAL

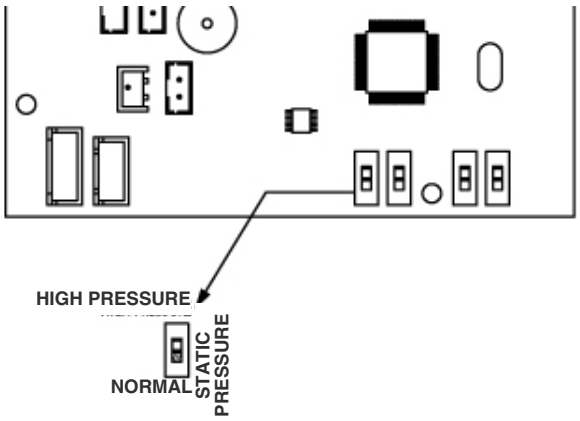

STATIC PRESSURE SW is used for increasing the fan speed according to the situation of the trial operation inside the room with ceiling height 2.5m and above. However noise gets slightly higher.

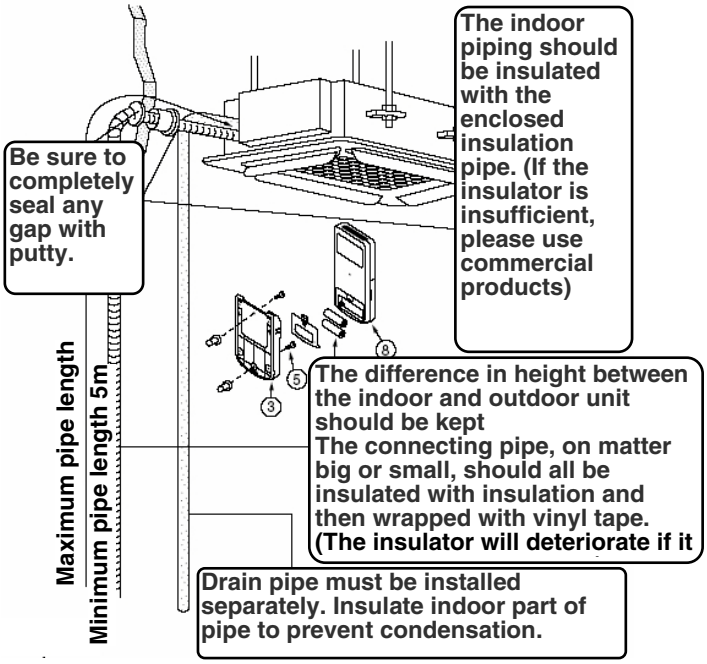

Installation of Ceiling Panel

① WARNING

- Please handle the ceiling panel carefully (Be sure not to damage or make it dirty)

INSTALL CEILING PANEL

1. Attach screws (2points) for fixing ceiling panel to indoor unit with space of approximately 12mm between each other. (Temporary fixing of ceiling panel cannot be done without having space)
2. Press the mark “PUSH” on the left and right sides of the suction grille.
3. Insert elongated holes (2p points) on ceiling panel to the screws for fixing the panel and slide the panel towards the directions shown by arrow. And fix temporarily with screws for fixing the panel on suction grille stopper side (2 points)
4. Tighten the screws for fixing the panel (4 points)

HOW TO SCREW FOR CEILING PANEL

① CAUTION Fixing screw ①torque 1.47~2.45Nm. (14~25kgf.cm)

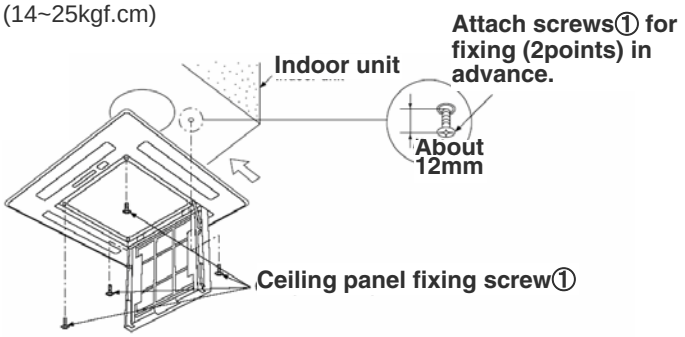

HOW TO ARRANGE CONNECTORS AND LEAD WIRES

Connect the connectors in accordance to part A detail view, then cover the connectors and lead wires with connector cover③ tighten the screws for fixing the connector cover by using tapping screw②

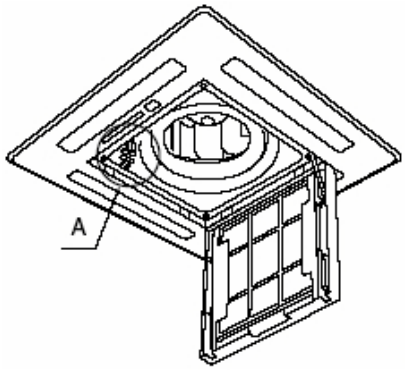

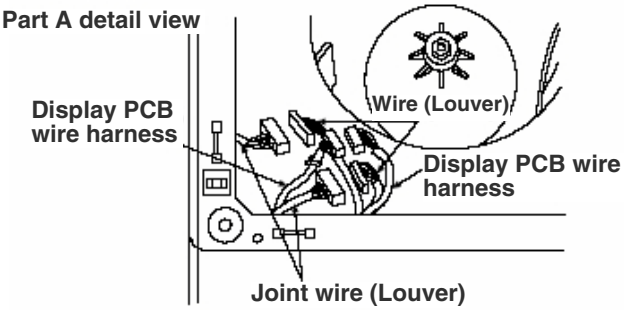

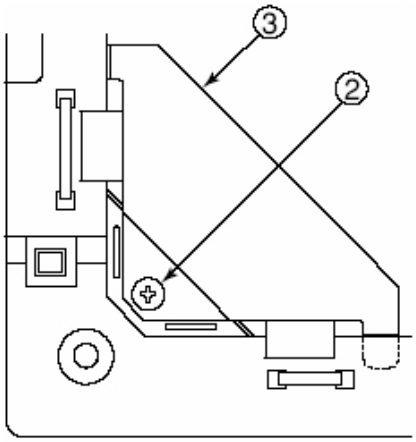

HOW TO INSTALL SAFETY CABLE

Fix safety cable④ connecting the ceiling panel and the suction grille (2 portions) by using tapping screw②

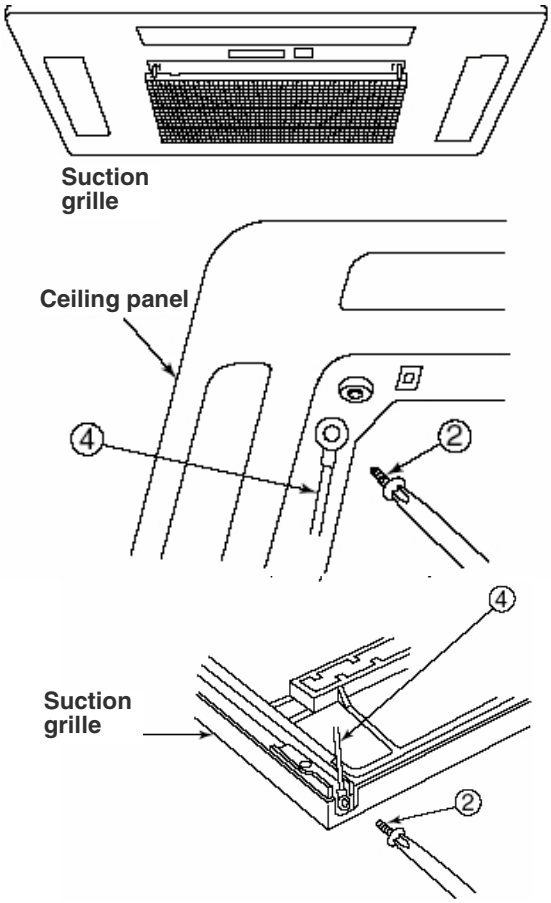

CONFIRMATION POINTS AFTER INSTALLATION

- Is there a gap between the ceiling panel and indoor unit, ceiling panel and ceiling?

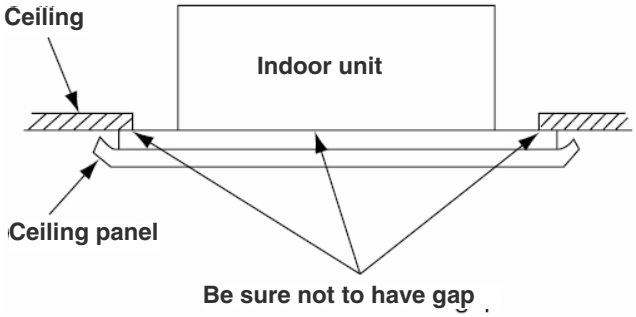

⚠ CAUTION

The gap can cause water dripping.

- Is air filter attached properly?

TRIAL OPERATION

Execute trial operation to confirm the air conditioner is working normally (movement of vertical deflector, receiving signals from remote controller, etc)

Explain operation of this unit to the customers following the procedure on operation manual.

Is timer lamp not blinking? (If drain pump trial operation switch is in '"trial operation" mode, timer lamp blinks 7 times)

10.1.5 INSTALLATION OF NORMAL STATIC PRESSURE DUCT TYPE INDOOR

Please read the safety precautions carefully before operating the unit. The contents of this section are vital to ensure safety. Please pay special attention to the following signs.

⚠WARNING Incorrect methods of installation may cause death or serious injury

⚠CAUTION Improper installation may result in serious consequences.

❗ Make sure to connect earth wire

⃠ This sign indicates prohibition

Be sure that the unit operates in proper condition after installation. Explain to customer the proper way of operating the unit as described in the user's guide.

⚠ WARNING

- Please request your sales agent or qualified technician to install your unit. Water leakage, short circuit of fire may occur if you do the installation work yourself.
- Please observe the instructions stated in the installation manual during the process of installation. Improper installation may cause water leakage, electric shock and fire.
- Make sure that the units are mounted at locations which are able to provide full support of the weight of the units. If not, the units may collapse and impose danger.
- Observe the rules and regulations of the electrical installation and the methods described in the installation manual when dealing with the electrical work. Use power cables approved by the authorities of your country.
- Be sure to use the specified wire for connecting the indoor and outdoor units. Please ensure that the connections are tight after the conductors of the wire are inserted into the terminals. Improper insertion and loose contact may cause over-heating and fire.
- Please use the specified piping set for the correct refrigerant gas. Otherwise, this may result in broken copper pipes or faults
- When installing or removing an air conditioner, don not allow air or moisture to remain in the refrigeration cycle. Otherwise, pressure in the refrigeration cycle may become abnormally high may cause a rupture.
- Be sure to ventilate fully in case refrigerant gas leaks while at work. If the refrigerant gas comes into contact with fire, poisonous gas might be discharged.
- After completion of installation work, check to make sure that there is no refrigeration gas leakage. If the refrigerant gas leaks into the room, coming into contact with fire in a fan-driver heater, space heater, etc; poisonous gas may be emitted.
- Unauthorized modifications to the air conditioner may be dangerous. If a breakdown occurs, please contact a qualified air conditioner technical or electrician. Improper repairs may result in water leakage, electric shock and fire.
- Be sure to connect the earth wire from power supply wire to the outdoor unit and between the outdoor and indoor unit. Improper grounding may cause electric shock. ⏚

① CAUTION

- A circuit breaker or fuse must be installed. Without a circuit breaker or fuse, the danger of electric shock exists. A main switch with a contact gap of more than 3.5mm has to be installed in the power supply line to the outdoor unit.
- Do not install the unit near a location where there is a flammable gas. The indoor unit may catch fire if flammable gas leaks around it.
- Be sure to tighten the flare nut to the specified torque using a toque wrench. If the flare nut is tightened excessively, it may crack as time elapses, causing the refrigerant leakage.
- Please ensure smooth flow of water when installing the drain hose.
- Piping shall be suitable supported with a maximum spacing of 1m between supports
- An IEC approved power cord should be used. Power cord type: NYM.
- "Height difference " and "Piping length" of Indoor and Outdoor unit differs depending on the Outdoor unit. Please refer to the "Installation manual" in Outdoor unit

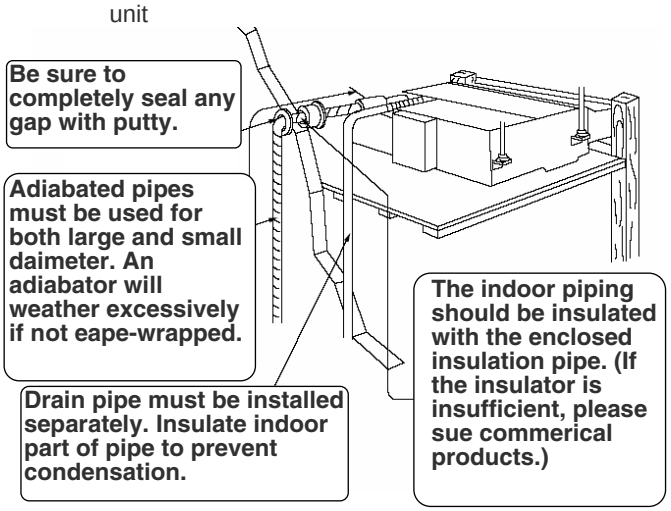

Proper place for Installation

Indoor unit

Refrigerating pipes can be drawn from the back, the under the left side of the indoor unit. In the case that refrigerating pipes are drawn form the left side, confirm the smooth flowing of condensed water. If not, the condensed water will overflow into the room. When the pipes are drawn from the right or left side, the pipes can be connected easily by configuration the pipes before installation.

Installation procedure and notice

Especially, the selection of installation place need great care for the split type air conditioner, because it is very difficult to move from place to place after the first installation.

1. Make a hole on the wall such that the place as shown in figure in order to keep the flow of condensed water smooth.

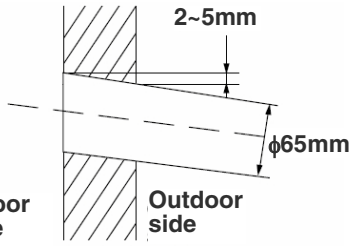

2. Hole on wall should be made with some inclination as above for keeping the smooth flow of condensed water.

1. Connecting pipe installation

   - Seal the end of pipes to prevent from moisture and water

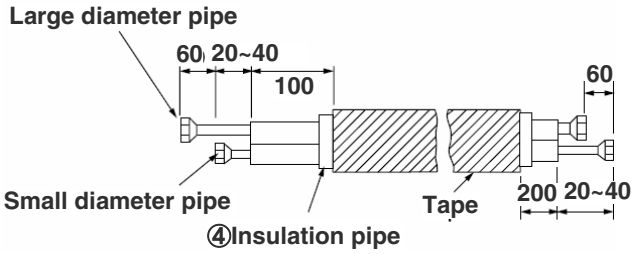

Unit: mm

INSTALLATION OF FULL DUCT TYPE

Full duct type

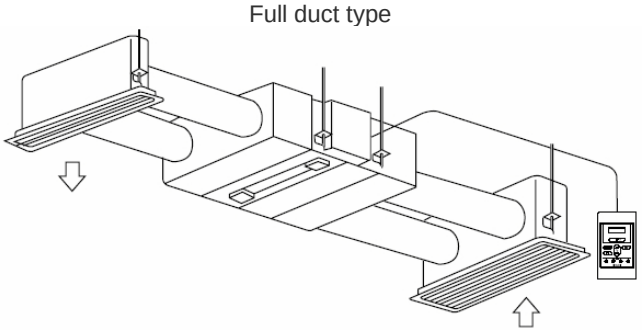

Need optional parts when install full duct type

①	Discharge grille
②	Chamber of discharge grille Ø150mm
③	Chamber of discharge of unit side Ø150mm
④	Chamber of suction of unit side Ø150mm
⑤	Chamber of suction grille Ø150mm
⑥	Suction grille
⑦	Flexible duct Ø150mm 1m
	Flexible duct Ø150mm 2m

- Select the indoor unit position, fixing direction of air outlet so that cool/hot air reaches all the room. Standard position of the indoor unit is with the wall side on the ceiling.
- Permissible length and bending of duct.

	Permissible length	Bending
Discharging side duct	4m or less added to suction side	90° or less, 1 section
Suction side duct	1m or less	45° or less, 1 section

- Secure the space for installation, inspection or servicing.
- Apply water-proof treatment to back surface of ceiling under the indoor unit, to prevent water drop.
- Do not allow any obstacle to block air flow within 1m of suction grille.

1. Installation figure

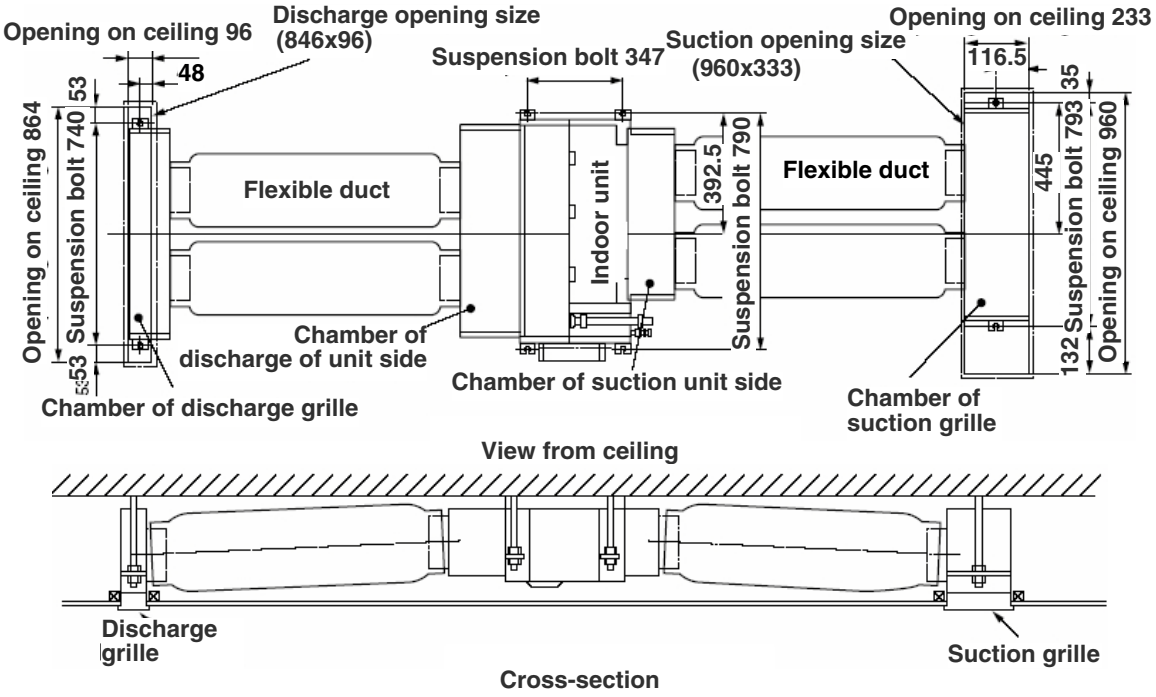

2. Opening on ceiling and suspension bolt position

- **Indoor unit**

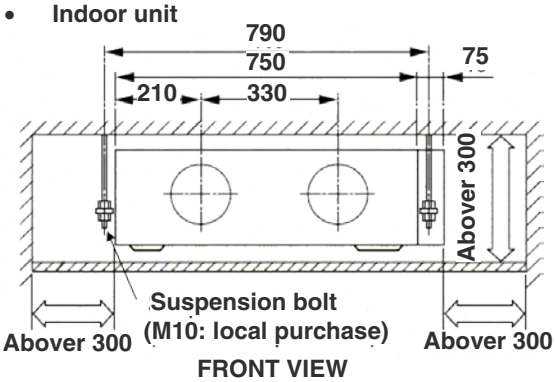

FRONT VIEW

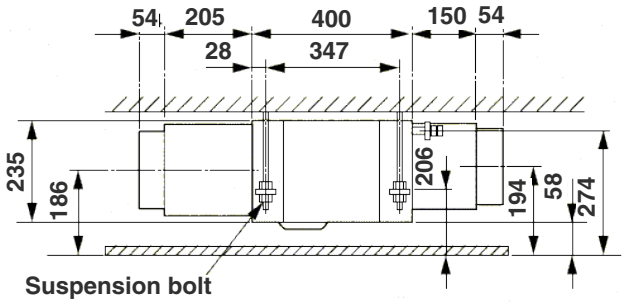

SIDE VIEW

- **Chamber of suction grille**

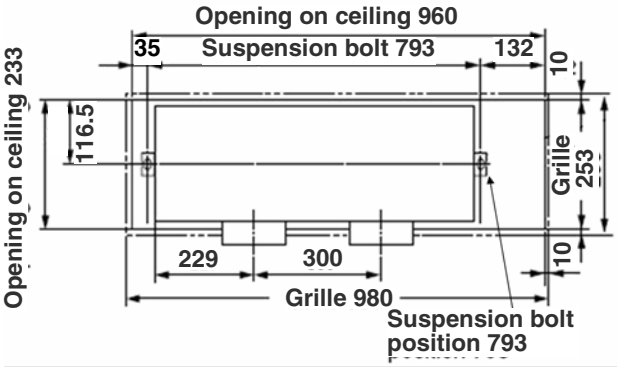

PLANE VIEW

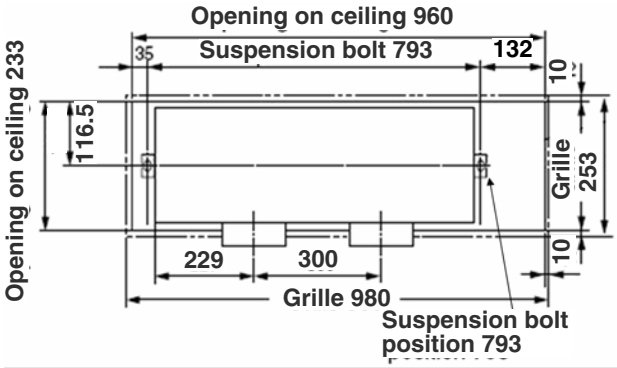

FRONT VIEW

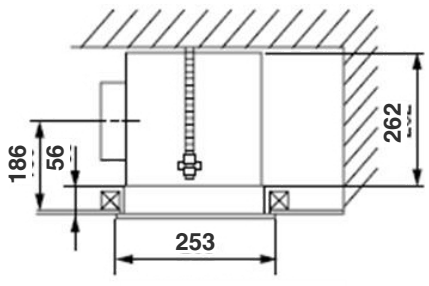

SIDE VIEW

- **Chamber of discharge grille**

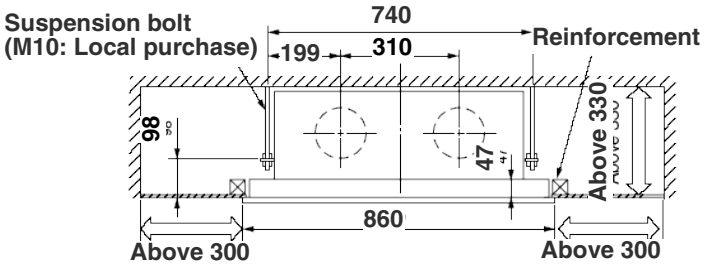

FRONT VIEW

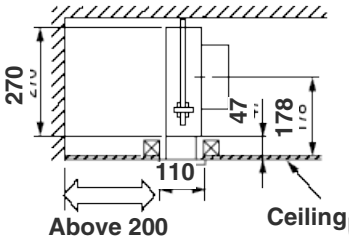

SIDE VIEW

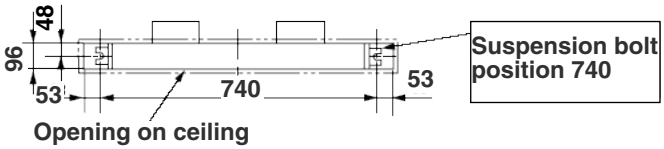

PLANE VIEW

- Arrange drain pipe, refrigerant pipe and connecting cord in their installation position.
- For finishing of opening on ceiling, arrange with builder in detail

3. Installation of suspension bolt

- Be sure to reinforce furring of ceiling (frame: ceiling joint and supporter) to maintain level of ceiling and prevent vibration of ceiling plate.
- Suspension bolts should be purchased in the field
- Refer to diagrams shown below or length of suspension bolts.
- **In case of wooden frame**
  60~90mm square piece of lumber

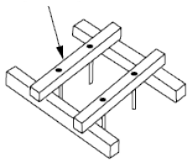

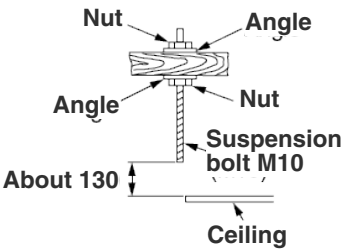

- **In case of steel frame**

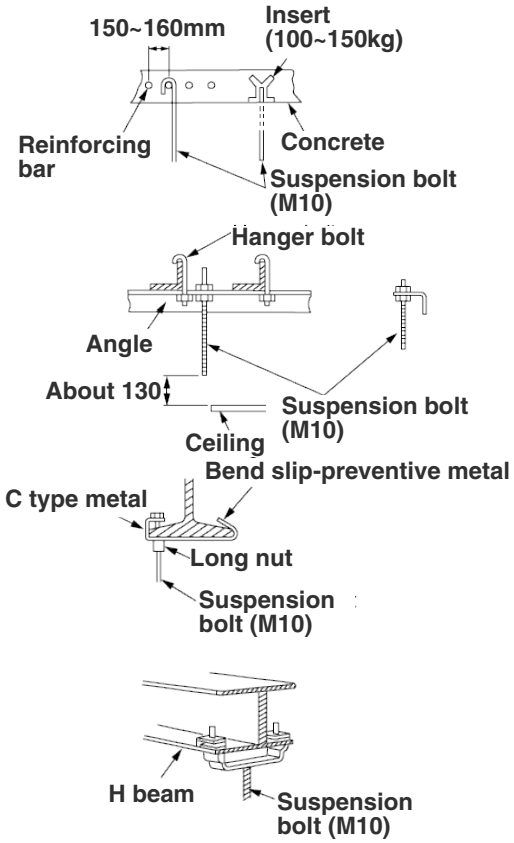

4. Preparation for installing indoor unit

- Remove 1 screw by which electric box is installed, and then remove electric box
- Turn removed electric box with lead wires kept connected so that wire lead out section is positioned at the upper side, and hook the claw of electric box to side plate. Then fix the electric box to the bottom of the indoor unit using 1 screw.
- Install 4 suspension clamps at both sides of indoor unit, 2 clamps at each side, using 8 tapping screws. (Since size of left and right clamps are different for certain parts, refer to diagram on the bottom)
- Chamber of discharge of unit side (optional part: RAU-DU2) on the indoor unit using 10 tapping screws.

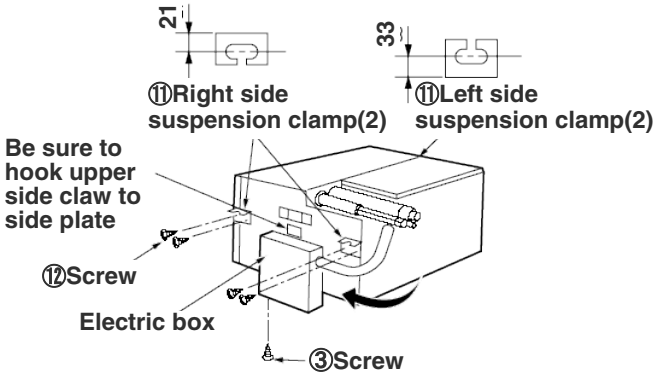

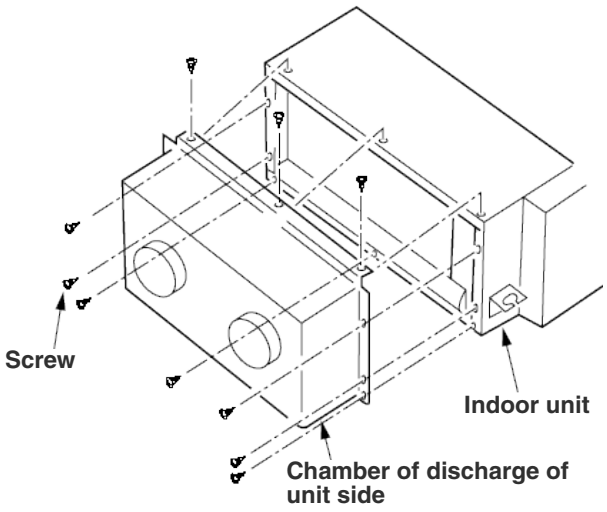

- Install bottom plates 1 and 2 on the bottom of the indoor unit using 9 tapping screws. (install bottom plate 1 first, followed by plate 2)
- Cut and open dotted line section for suction port at the back of the indoor unit, using nippers (2 locations)
- Remove 2 screws at top plate end of indoor unit and chamber of suction of unit side using 7 screws.

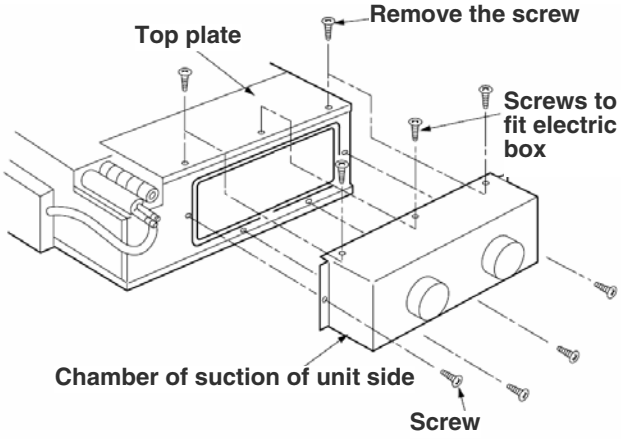

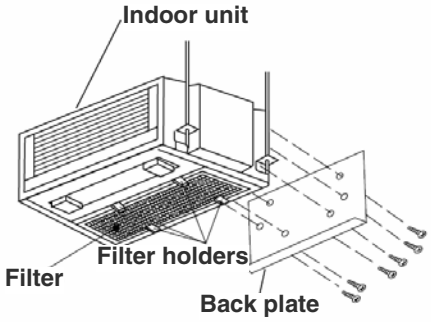

(1) Bottom side suction opening

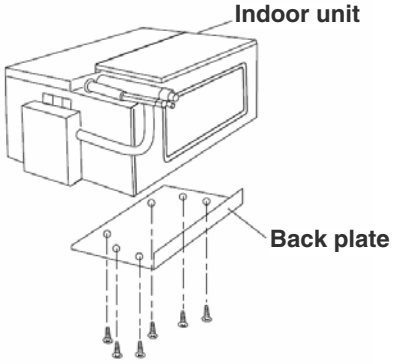

(2) Back side suction opening

5. Installation of indoor unit

- Set nut and washer on suspension bolt and hook it to suspend clamp by lifting the indoor unit.
- Make sure that indoor unit is kept level using a level or vinyl hose with water.
- Fix the indoor unit so that the space between bottom surfaces of ceiling and indoor unit is 58mm.

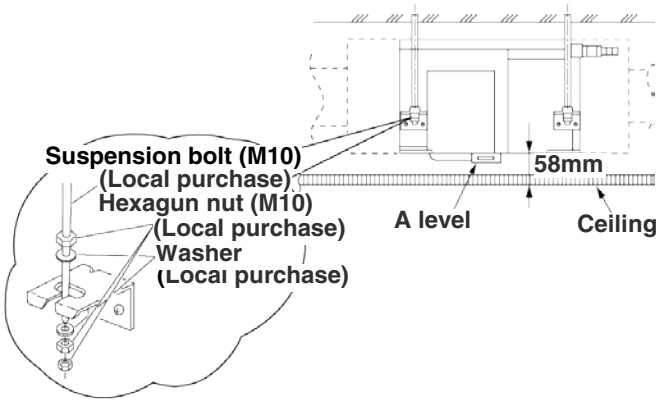

① CAUTION

- Be sure to install the indoor unit level. If the indoor unit is inclined, water may leak.
- If the space between bottom surfaces of indoor unit and ceiling is not correct, there may be a gap between the grille and ceiling surface, which will cause dripping of condensed water.

INSTALLATION OF SEMI DUCT TYPE

①	Discharge grille
②	Chamber of discharge grille Ø150mm
③	Chamber of discharge of unit side Ø150mm
④	Suction grille
⑤	Flexible duct Ø150mm 1m
	Flexible duct Ø150mm 2m

- Select the indoor unit position, fixing direction of air outlet so that cool/hot air reaches all the room. Standard position of the indoor unit is with the wall side on the ceiling.
- Permissible length and bending of duct.

	Permissible length	Bending
Discharging side duct	4m or less added to suction side	90° or less, 1 section

- Secure the space for installation, inspection or servicing.
- Apply water-proof treatment to back surface of ceiling under the indoor unit, to prevent water drop.
- Do not allow any obstacle to block air flow within 1m of suction grille
-

1. Installation figure

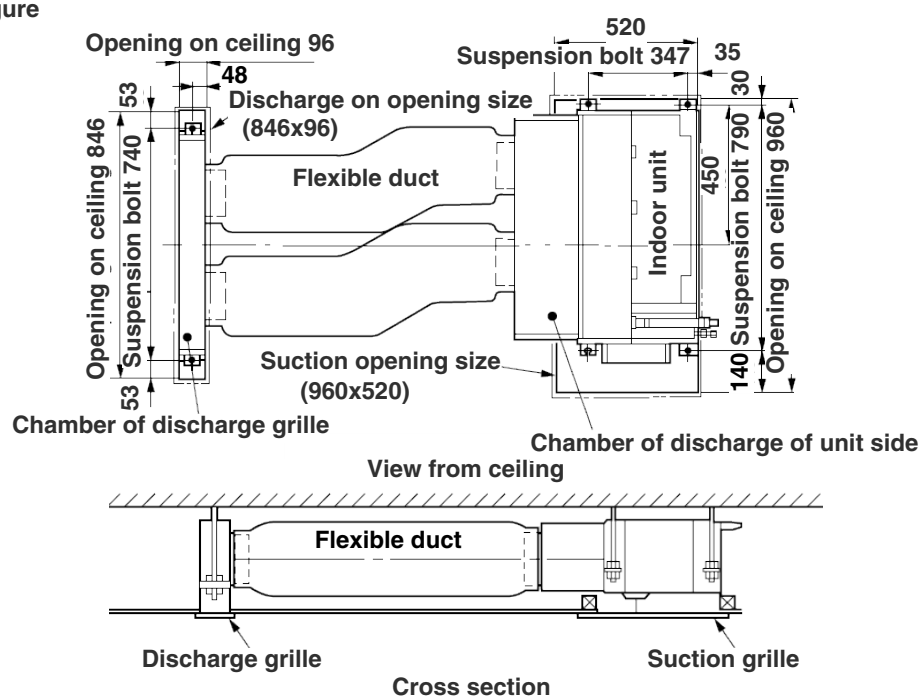

2. Opening on ceiling and suspension bolt position

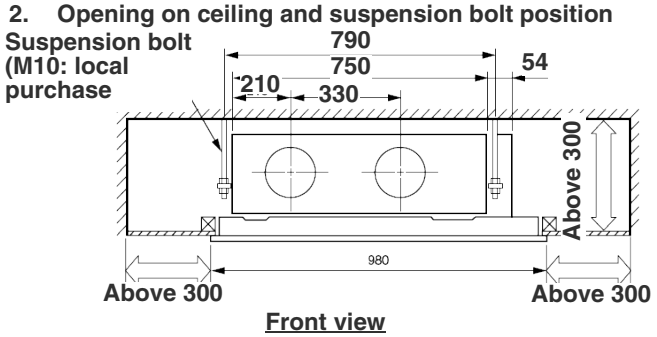

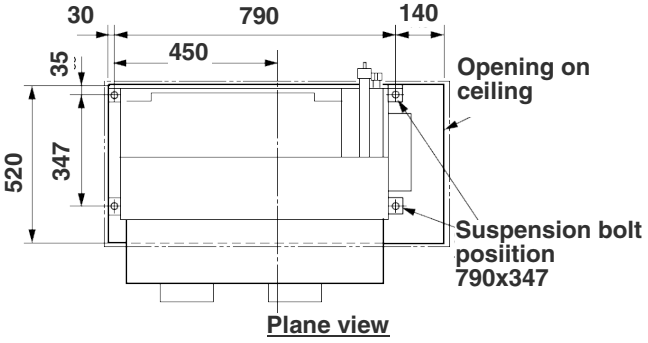

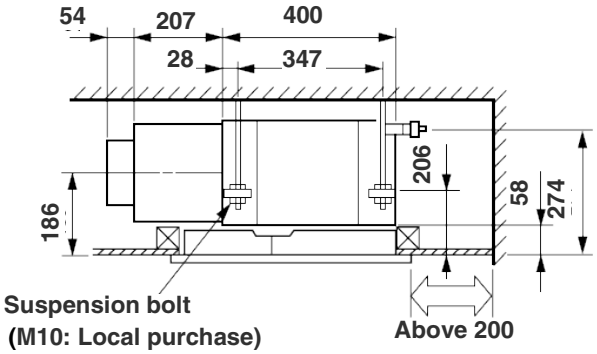

Side view

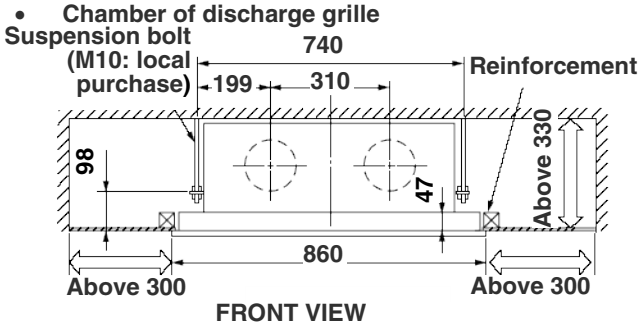

FRONT VIEW

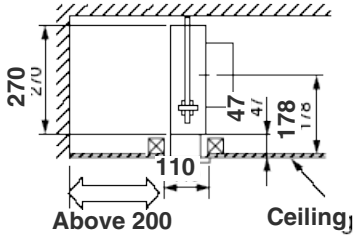

SIDE VIEW

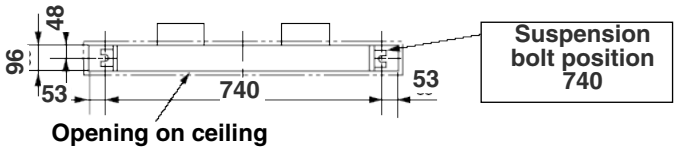

PLANE VIEW

4. Installation of suspension bolt

- This is the same as for discharge/suction duct type. Follow instructions for discharge/suction duct type

4. Preparation for installing indoor unit

- Remove 1 screw by which electric box is installed, and then remove electric box
- Turn removed electric box with lead wires kept connected so that wire lead out section is positioned at the upper side, and hook the claw of electric box to side plate. Then fix the electric box to the bottom of the indoor unit using 1 screw.
- Install 4 suspension clamps at both sides of indoor unit, 2 clamps at each side, using 8 tapping screws. (Since size of left and right clamps are different for certain parts, refer to diagram on the bottom)
- Chamber of discharge of unit side on the indoor unit using 10 tapping screws.

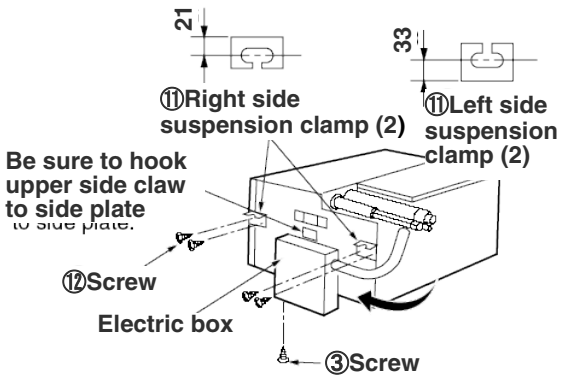

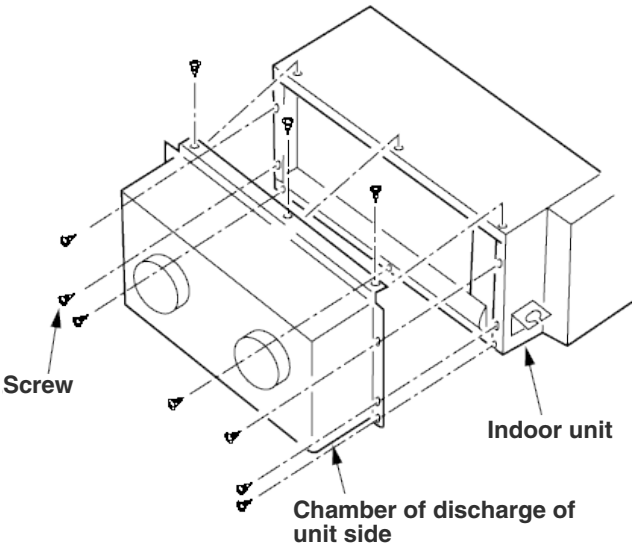

- Install bottom plates 1 and 2 on the bottom of the indoor unit using 9 tapping screws. (install bottom plate 1 first, followed by plate 2)
- Cut and open dotted line section for suction port at the back of the indoor unit, using nippers (2 locations)
- Remove 2 screws at top plate end of indoor unit and chamber of suction of unit side using 7 screws.

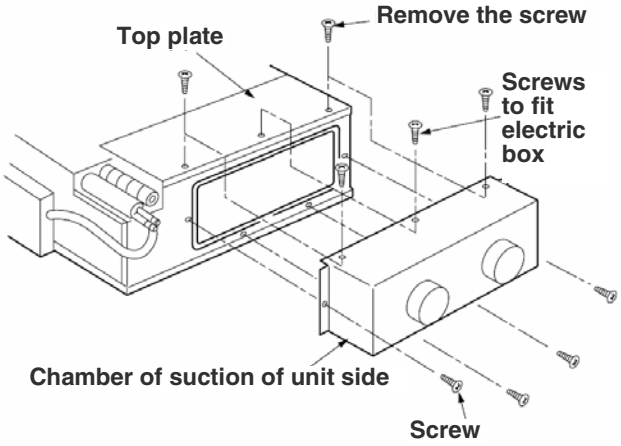

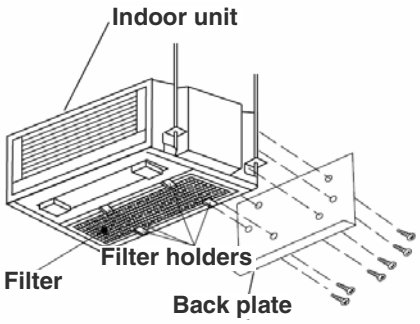

(1) Bottom side suction opening

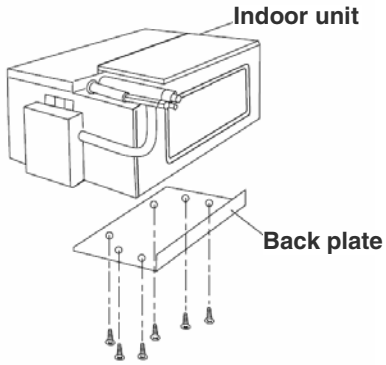

(2) Back side suction opening

5. Installation of indoor unit

Set nut and washer on suspension bolt and hook it to suspend clamp by lifting the indoor unit.

Make sure that indoor unit is kept level using a level or vinyl hose with water.

Fix the indoor unit so that the space between bottom surfaces of ceiling and indoor unit is 58mm.

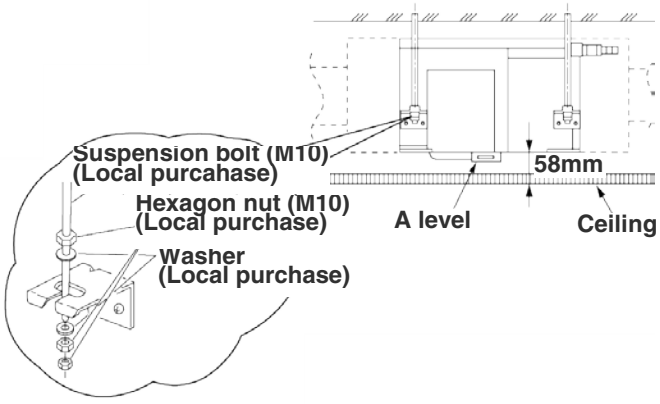

① CAUTION

- Be sure to install the indoor unit level. If the indoor unit is inclined, water may leak.
- If the space between bottom surfaces of indoor unit and ceiling is not correct, there may be a gap between the grille and ceiling surface, which will cause dripping of condensed water.

INSTALLATION OF NON DUCT TYPE

Non duct type

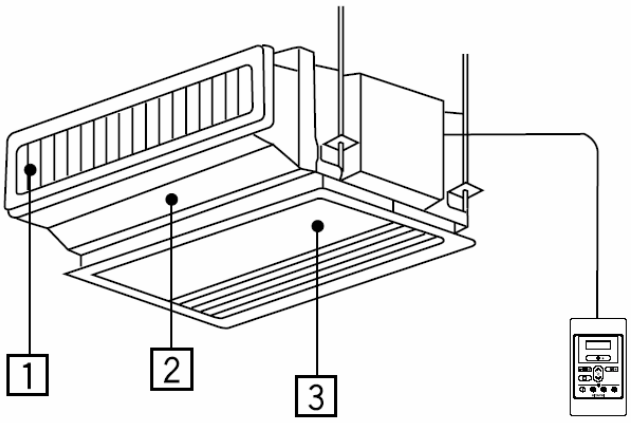

Need optional parts when install non duct type

①	Discharge grille
②	Discharge duct
③	Suction grille

1. Installation figure

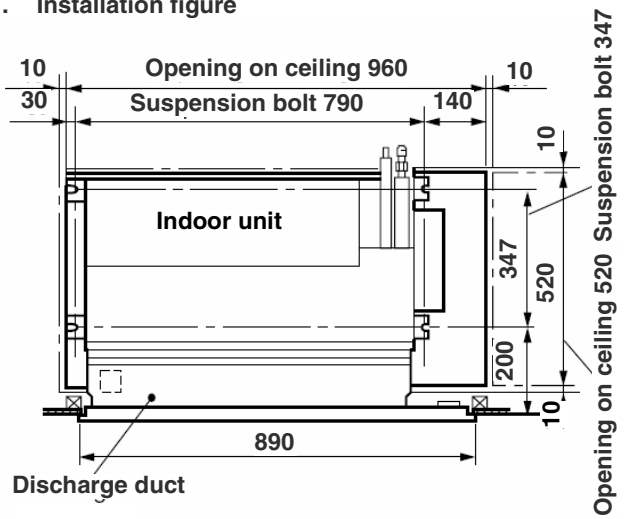

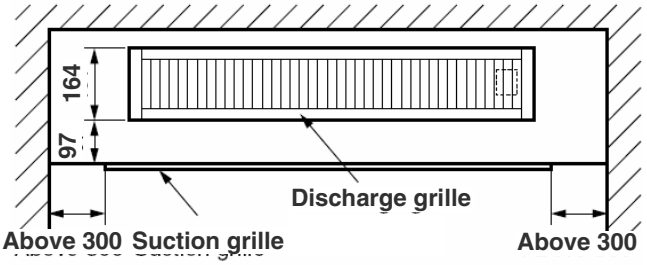

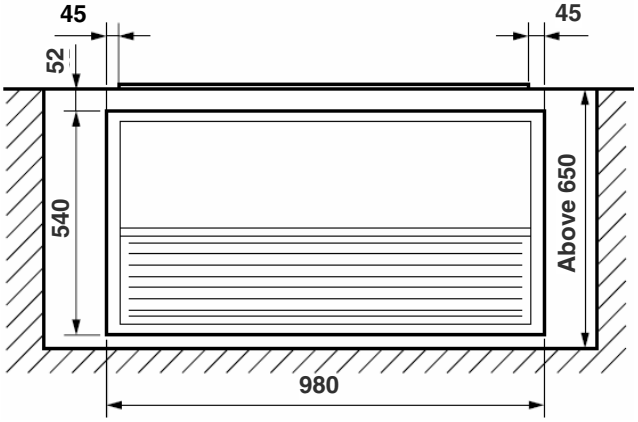

- Select the indoor unit position, fixing direction of air outlet so that cool/hot air reaches all the room.

- Do not allow any obstacle to block air flow within 1m of suction grille

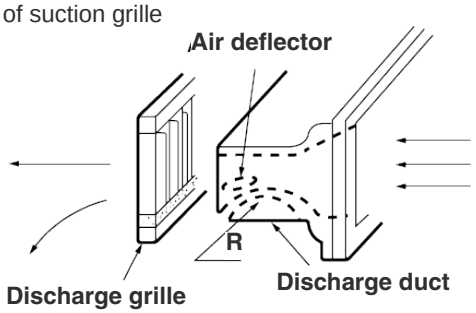

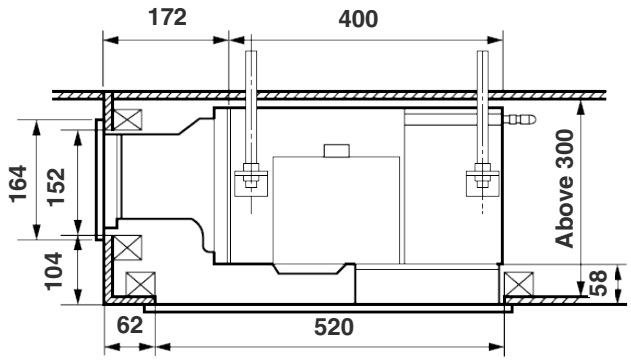

2. Opening on ceiling and suspension bolt position

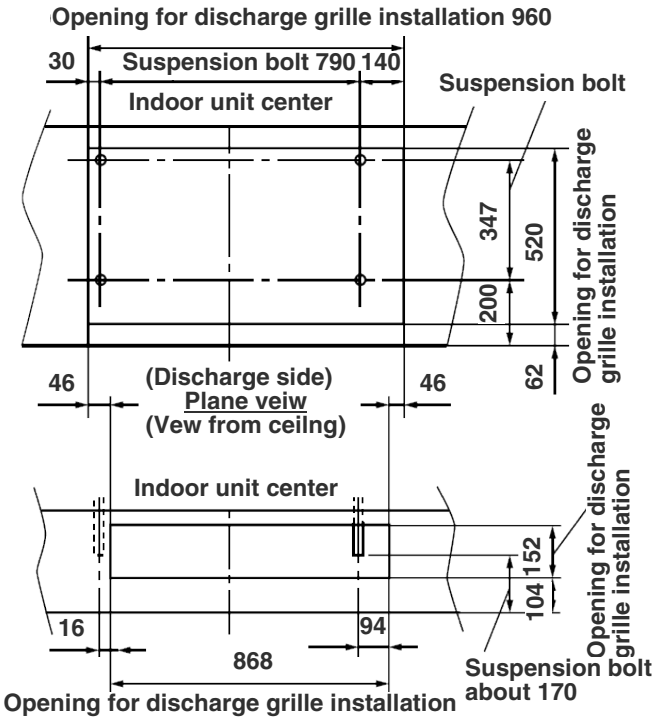

Front view
(View from the front)

- Use M10 bolt for suspension bolt.
- Opening of ceiling and suspension bolt position are as shown on the left.
- Before installing the indoor unit, prepare opening 960mm x 520mm on ceiling, and 868mm x 152mm on wall and arrange drain pipe, refrigerant pipe and connecting cord in their installation positions.
- For finishing of opening on ceiling and wall, arrange with builder in detail.
- Be sure to reinforce furring of ceiling (frame: ceiling joist and joist supporter) to maintain level of ceiling and prevent vibration of ceiling plate.

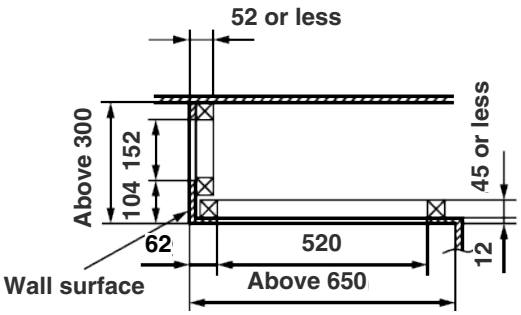

3. Installation of suspension bolt

- This is same as for discharge/suction duct type. Follow instructions for discharge/suction duct type

4. Preparation for installing indoor unit

- Remove 1 screw by which electric box is installed, and then remove electric box
- Turn removed electric box with lead wires kept connected so that wire lead out section is positioned at the upper side, and hook the claw of electric box to side plate. Then fix the electric box to the bottom of the indoor unit using 1 screw.
- Install 4 suspension clamps at both sides of indoor unit, 2 clamps at each side, using 8 tapping screws.
- Match discharge duct facing down (motor lead is set to left side) to discharge port of indoor unit and install using 6 tapping screws.

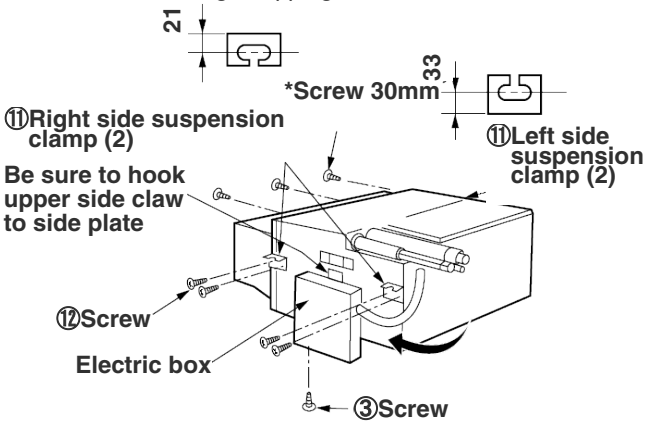

5. Installation of indoor unit

- Set nut and washer on suspension bolt and hook it to suspend clamp by lifting the indoor unit.
- Make sure that indoor unit is kept level using a level or vinyl hose with water.
- Fix the indoor unit so that the space between bottom surfaces of ceiling and indoor unit is 58mm.

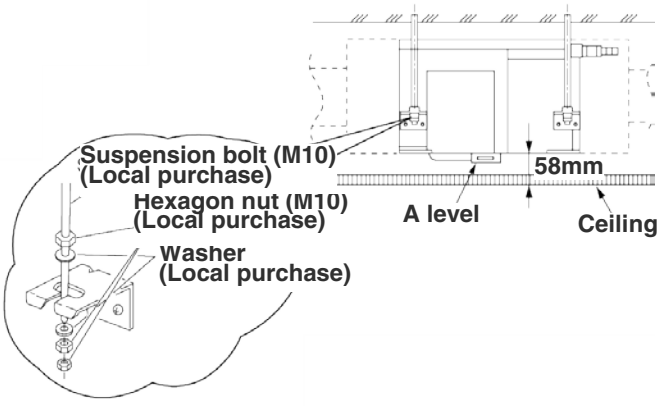

① CAUTION

- Be sure to install the indoor unit level. If the indoor unit is inclined, water may leak.
- If the space between bottom surfaces of indoor unit and ceiling is not correct, there may be a gap between the grille and ceiling surface, which will cause dripping of condensed water.

6. Change of suction opening and filter position from bottom to back side

- Remove the filter at the bottom side of indoor unit by unscrew 8 screws at the filter holders (4 portions).
- Remove 6 screws at back plate of indoor unit.
- Then install the back plate at the bottom of indoor unit using 6 screws.
- Install filter at backside of indoor unit by fixing it with filter holders (4 portions) using 8 screws.

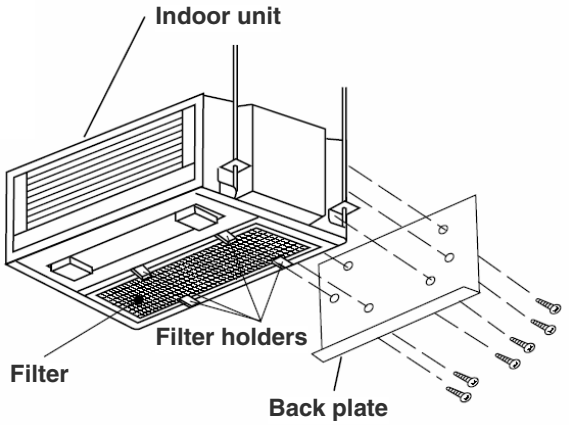

(1) Bottom side suction opening

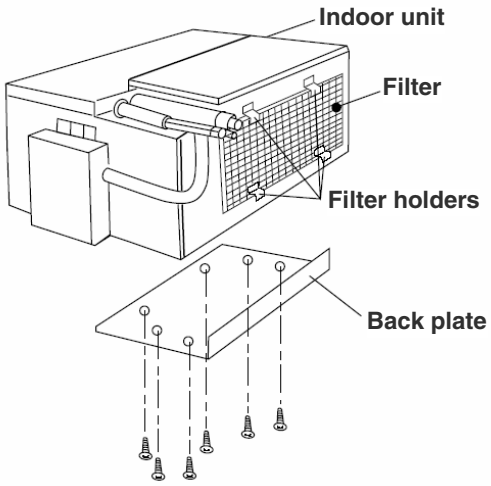

(2) Back side suction opening

Setting of switches

High static-pressure switch (Full duct type and semi duct type)

For full duct type and semi duct type, set the high static – pressure switch to HIGH STATIC-PRESSURE
If it is not set to HIGH STATIC-PRESSURE, there will be reduction of cooling and heating capacities. (At the time of delivery, the switch is set as “NORMAL”)

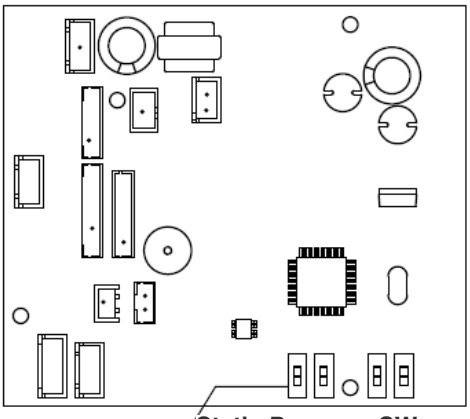

4. Installation of wired remote controller

a. Connection to the electrical box
- Remove the cover of electric box
- Connect the connector of wired remote controller to CN1102
- Assemble back the cover of electrical box

b. Wiring installation for wired remote controller (2 methods)
- Wired remote controller casing can be opened by pressing the slots with minus screw driver (see below diagram)

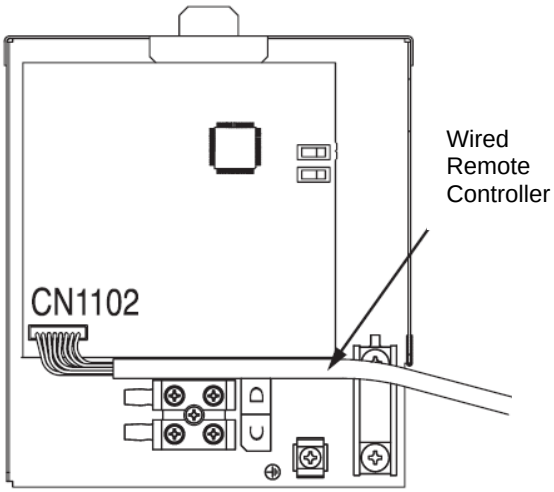

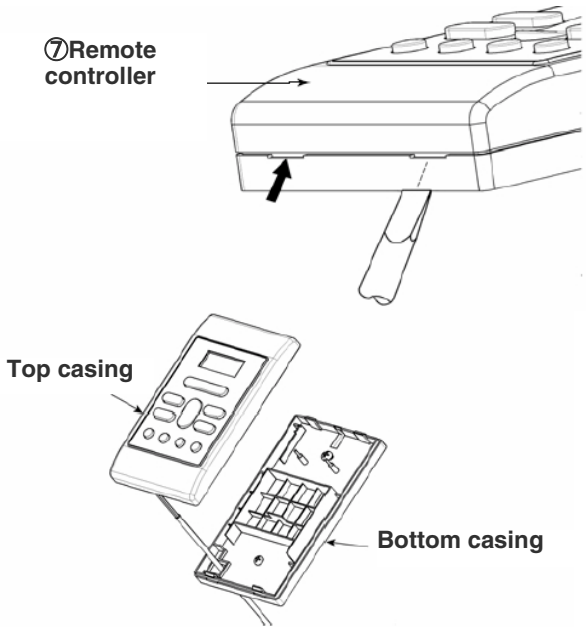

- Decide the fixing location of remote controller so that the length of wire shall be within 15 meters.

① CAUTION

- Do not cut the provided wire. Excess wire should be properly wound and fitted at safe place
- Do not join the wire with additional wire.
- When connecting the wires via the wall's recessed slot:

1. Fix the bottom casing to the wall by the provided screw
2. Assemble the top casing to the fixed bottom casing. (Refer to the illustration below for detail installation

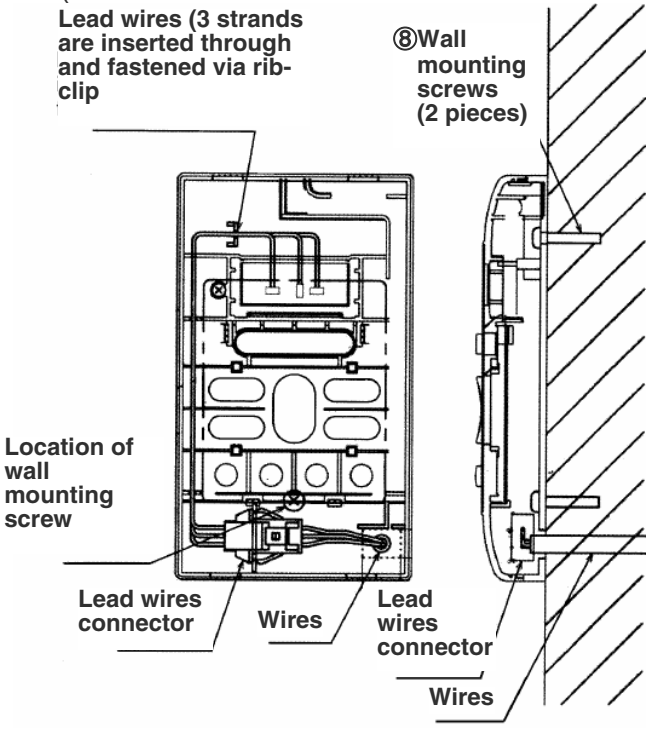

- When the wires to be connected from inside top portion of top casing;

1. Break off a perforated aperture located at the top portion of the bottom casing by nipper. Remove sharp edges around the aperture by cutter.
2. Fix the bottom casing to the wall by the screw provided.
3. Connect the wires to the lead wires connector.
4. Mount the wires through the provided slot on top casing.

5. Assemble the top casing to the fixed bottom casing. (Refer to the illustration below for detail installation)

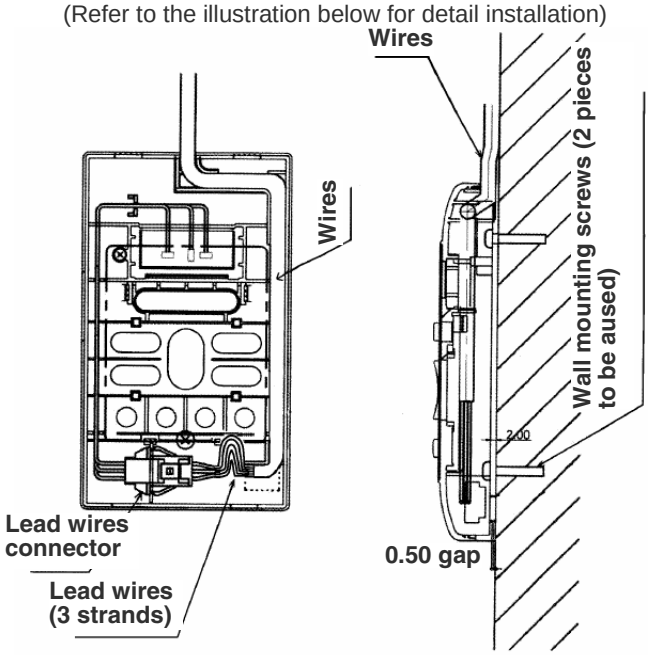

3. Installation of wireless remote controller (optional))

- The remote controller can be placed in its holder which is fixed on wall or beam
- To operate the remote controller at its holder, please ensure that the unit can receive signal transmitted from the controller at the place where the holder is to be fixed. The unit will beep when signal is received from the remote controller. The signal transmission is weakening by fluorescent light. Therefore, during the installation of the remote control holder, please switch on the light, even during day time, to determine the mounting location of the holder.

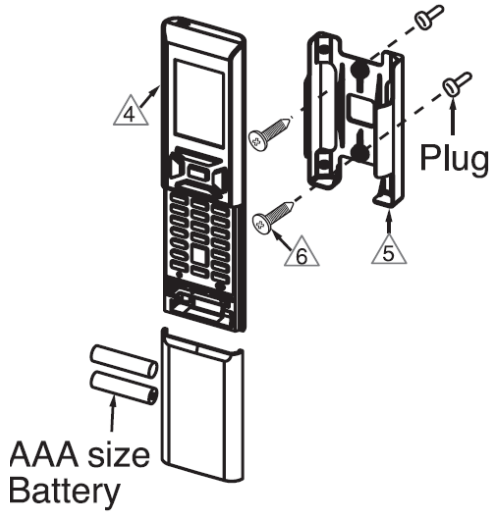

Installation of display panel (Optional)

- Select an installation position on ceiling or wall where there is no obstacle to interrupt signal reception.
- Loosen screws of panel installation plate so that bracket can be slightly moved.
- Match brackets to the opening on ceiling or wall and tighten screws until bracket is firmly secured to ceiling material.
- Install the panel cover so inside claws are securely hooked to the panel installation plate
- Conduct the indoor unit side housing of display panel cord to the electric box of the indoor unit an connect it with the housing at the side of the unit.

① CAUTION

- Please disconnect wired remote controller connector at CN18 if to use wireless remote controller.

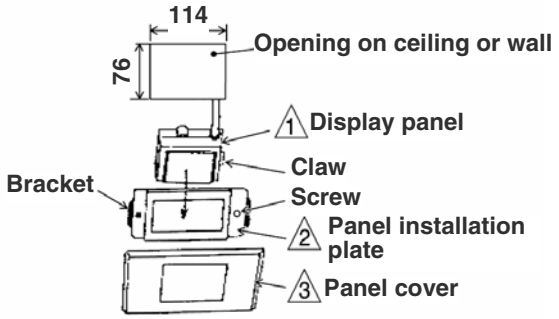

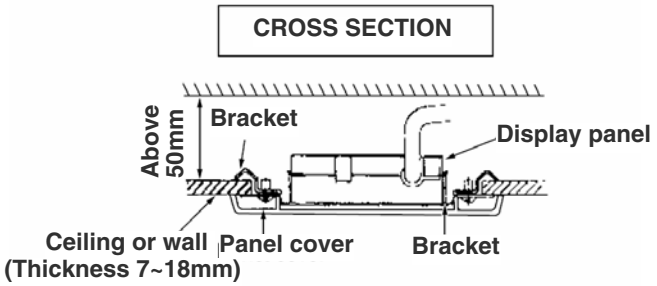

Connetion of discharge duct and display panel lead wires (Optional)

- Connect the motor connector of discharge duct to the connector CN8 (see diagram below)
- Attach connector of this panel of the connector CN11A on the control PWB>
- Be sure to fix the motor lead wire of discharge duct (if applicable) using fixing band (For full duct type an semi duct type connect only display panel

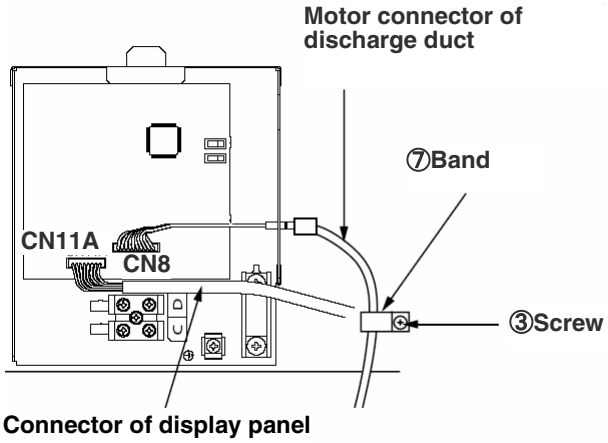

4. When connecting the H-Link

- When connecting to H-link, a separately purchased RAC adaptor is required.
- TO install the wiring, the electrical box cover must be opened, (for the RAC adaptor connect to CN1101)
- The connection cord and power cables are to be arranged and tied up as per the diagram as shown below.
- Please refer to the respective user manuals of the RAC adaptor for further details.
- Please refer to the user manual for instructions on the removal and installation of the electrical box.

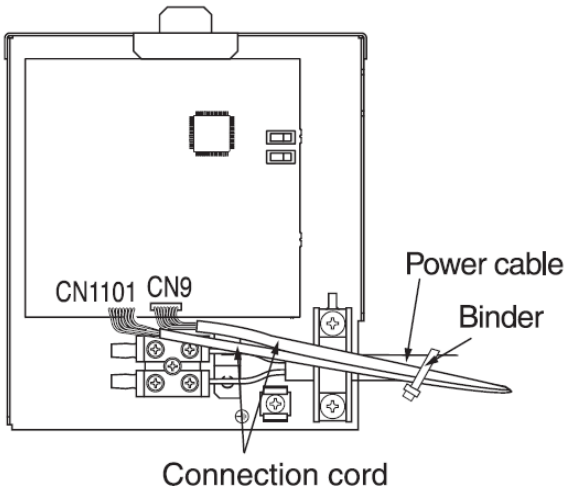

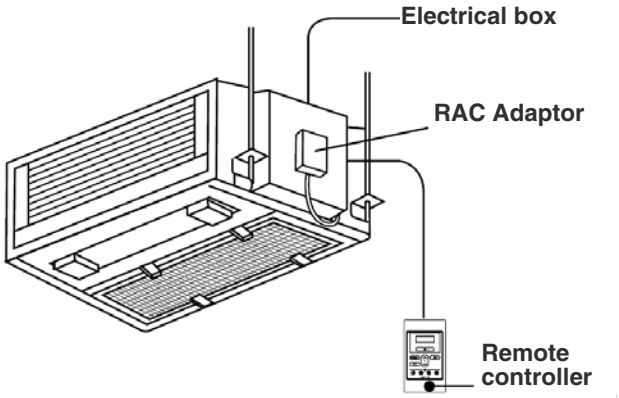

5. Protection of lead wire

- Wrap aluminum tape around PVC tube between electric box and indoor unit (cord band).

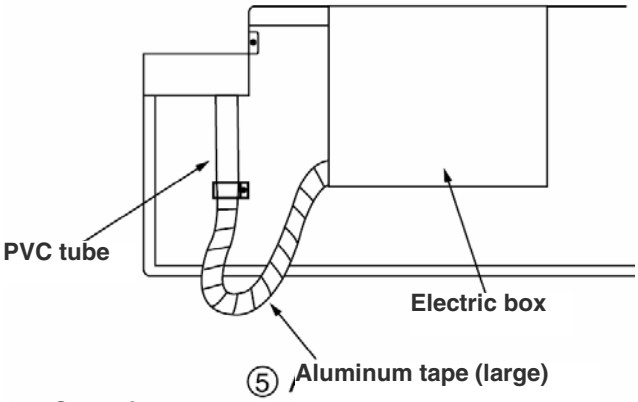

6. Operation test

- Please ensure that the air conditioners in normal operating condition during the operation test.
- Explain to your customer the proper operation procedures as described in the user manual.
- If the indoor unit does not operate, check to see that the connections are correct.

① CAUTION

- Trial run should be conducted on one unit at a time to check for incorrect wiring of connecting cord.

10.1.6 INSTALLATION OF MIDDLE STATIC PRESSURE DUCT TYPE INDOOR

Please read the safety precautions carefully before operating the unit. The contents of this section are vital to ensure safety. Please pay special attention to the following signs.

⚠WARNING Incorrect methods of installation may cause death or serious injury

⚠CAUTION Improper installation may result in serious consequences.

Make sure to connect earth wire

This sign indicates prohibition

Be sure that the unit operates in proper condition after installation. Explain to customer the proper way of operating the unit as described in the user's guide.

⚠ WARNING

- Please request your sales agent or qualified technician to install your unit. Water leakage, short circuit of fire may occur if you do the installation work yourself.
- Please observe the instructions stated in the installation manual during the process of installation. Improper installation may cause water leakage, electric shock and fire.
- Make sure that the units are mounted at locations which are able to provide full support of the weight of the units. If not, the units may collapse and impose danger.
- Observe the rules and regulations of the electrical installation and the methods described in the installation manual when dealing with the electrical work. Use power cables approved by the authorities of your country.
- Be sure to use the specified wire for connecting the indoor and outdoor units. Please ensure that the connections are tight after the conductors of the wire are inserted into the terminals. Improper insertion and loose contact may cause over-heating and fire.
- Please use the specified piping set for the correct refrigerant gas. Otherwise, this may result in broken copper pipes or faults
- When installing or removing an air conditioner, don not allow air or moisture to remain in the refrigeration cycle. Otherwise, pressure in the refrigeration cycle may become abnormally high may cause a rupture.
- Be sure to ventilate fully in case refrigerant gas leaks while at work. If the refrigerant gas comes into contact with fire, poisonous gas might be discharged.
- After completion of installation work, check to make sure that there is no refrigeration gas leakage. If the refrigerant gas leaks into the room, coming into contact with fire in a fan-driver heater, space heater, etc; poisonous gas may be emitted.
- Unauthorized modifications to the air conditioner may be dangerous. If a breakdown occurs, please contact a qualified air conditioner technical or electrician. Improper repairs may result in water leakage, electric shock and fire.
- Be sure to connect the earth wire from power supply wire to the outdoor unit and between the outdoor and indoor unit. Improper grounding may cause electric shock.

⚠ CAUTION

- A circuit breaker or fuse must be installed. Without a circuit breaker or fuse, the danger of electric shock exists. A main switch with a contact gap of more than 3.5mm has to be installed in the power supply line to the outdoor unit.
- Do not install the unit near a location where there is a flammable gas. The indoor unit may catch fire if flammable gas leaks around it.
- Be sure to tighten the flare nut to the specified torque using a toque wrench. If the flare nut is tightened excessively, it may crack as time elapses, causing the refrigerant leakage.
- Please ensure smooth flow of water when installing the drain hose.
- Piping shall be suitable supported with a maximum spacing of 1m between supports
- An IEC approved power cord should be used. Power cord type: NYM.
- "Height difference" and "Piping length" of Indoor and Outdoor unit differs depending on the Outdoor unit. Please refer to the "Installation manual" in Outdoor unit

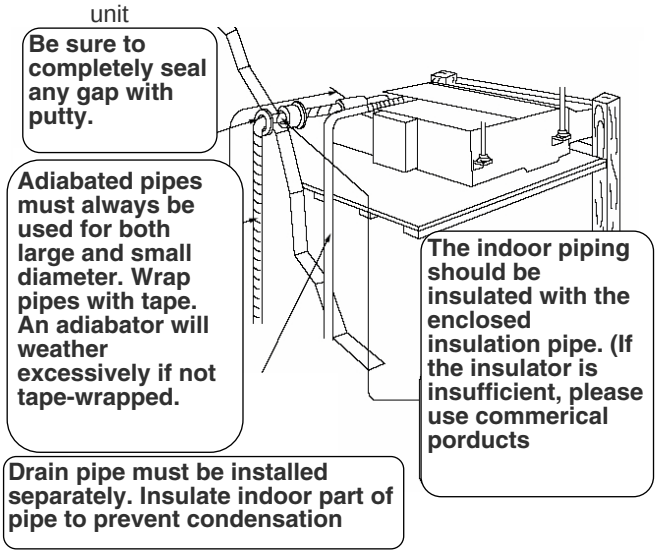

Proper place for Installation

Indoor unit

Refrigerating pipes can be drawn from the back, the under the left side of the indoor unit. In the case that refrigerating pipes are drawn form the left side, confirm the smooth flowing of condensed water. If not, the condensed water will overflow into the room. When the pipes are drawn from the right or left side, the pipes can be connected easily by configuration the pipes before installation.

Installation procedure and notice

Especially, the selection of installation place need great care for the split type air conditioner, because it is very difficult to move from place to place after the first installation.

1. Make a hole on the wall such that the place as shown in figure in order to keep the flow of condensed water smooth.

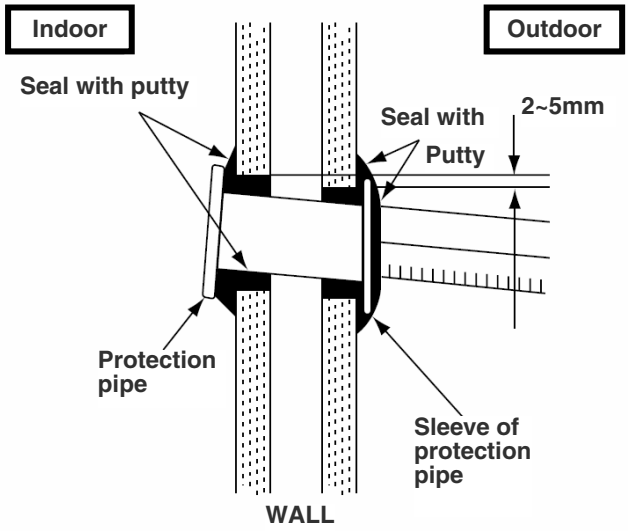

2. Hole on wall should be made with some inclination as above for keeping the smooth flow of condensed water.
3. Connecting pipe installation

- Seal the end of pipes to prevent from moisture and water

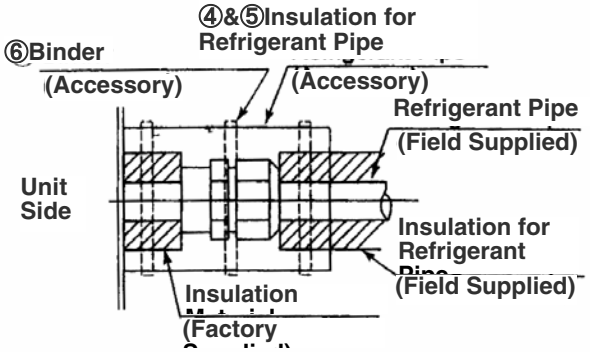

① CAUTION

The rubber strap used for fixing the insulator should not be tied with great force. Otherwise, this will damage the heat insulation and causes water condensation.

1. Opening on ceiling & suspension bolt

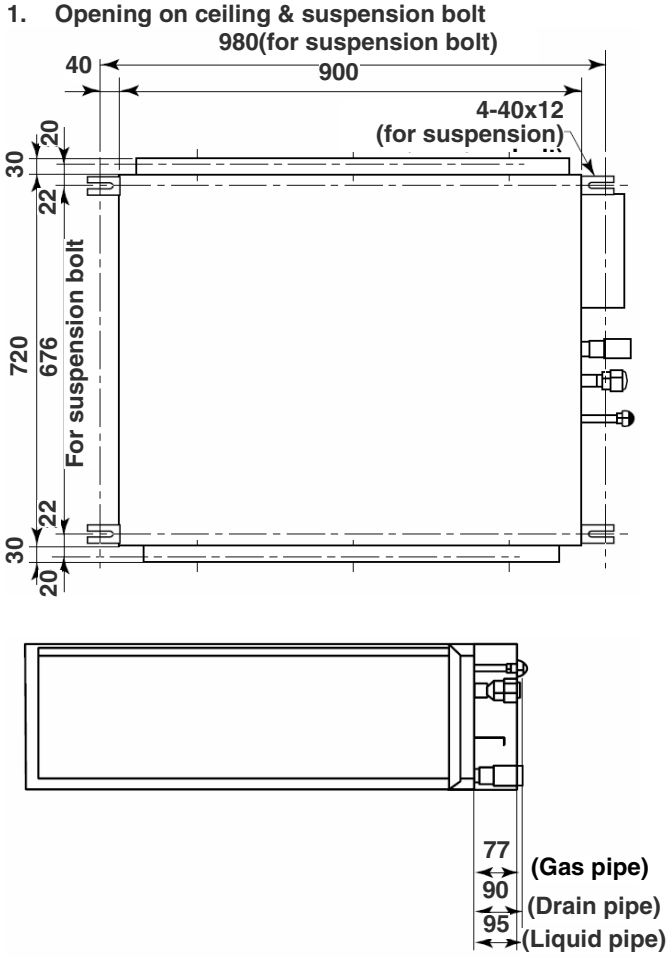

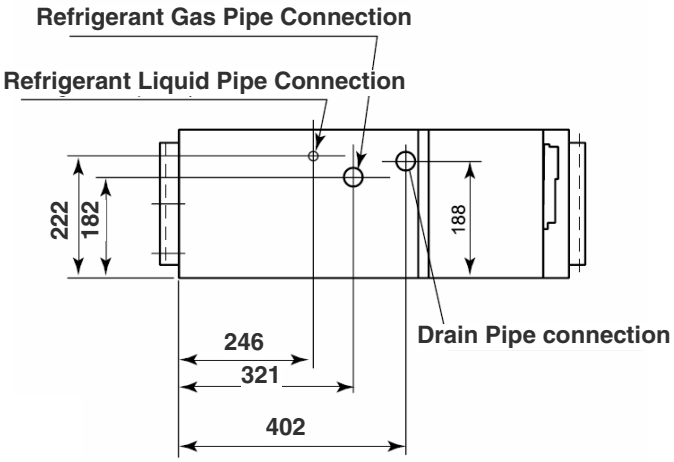

- Need a connecting work for refrigerant pipe, drain pipe and F cable in the ceiling after suspending the indoor unit. Arrange drain pipe, refrigerant pipe and F cable in their installation position.
- For finishing of opening on ceiling, arrange with builder in detail
- If ceiling is already completed, connecting cables between indoor and outdoor, piping and drain piping must be done before fitting the indoor unit.

2. Preparation for installing the indoor unit

- Be sure to reinforce
- Be sure to reinforce furring of ceiling (frame: ceiling joint and supporter) to maintain level of ceiling and prevent vibration of ceiling plate.
- Suspension bolts should be purchased in the field
- Refer to diagrams shown below or length of suspension bolts.

- **In case of wooden frame**

60~90mm square piece of lumber

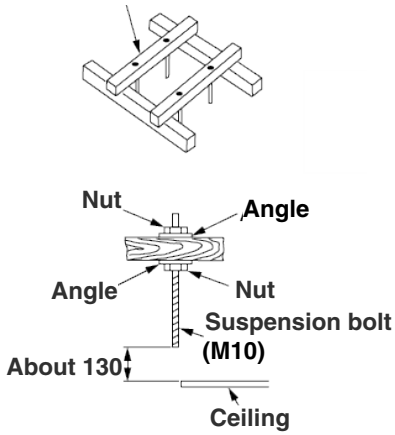

- **In case of steel frame**

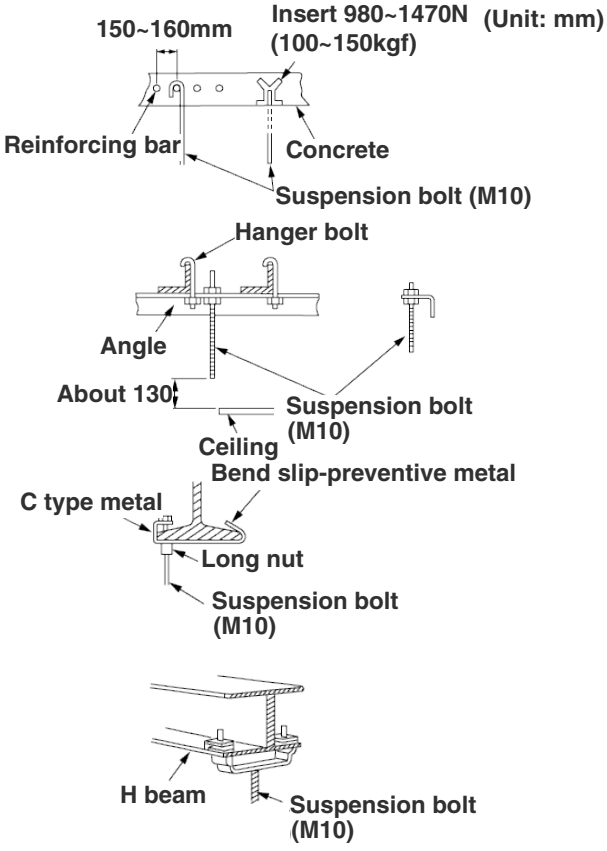

3. Installation of the Indoor Unit

a) Mark the positions of the sling bolts, refrigerant piping connections and drain connection.

b) Ceiling work: If basically varies according to the building structure. Consult with the architect or interior finish worker for more information on this.

i) To maintain the appropriate levelness of the ceiling and preventing from the vibration, the additional reinforcement in the ground of ceiling (building frame) is essential.

ii) Provide a space for the air inlet grille, air outlet grille and maintenance work

iii) Do not suspend bolts on the indoor units. If connected, the light may flicker or the light unit may be rattled by vibration of the indoor units.

c) Mounting and Hanging the Indoor unit

Field Supplied parts

Sling Bolts 4-M10 or W3/8

Nut 8-M10 or W3/8

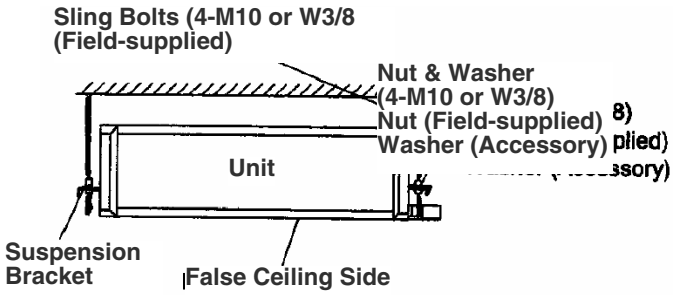

i) Put the nuts on each of the four hanging bolts

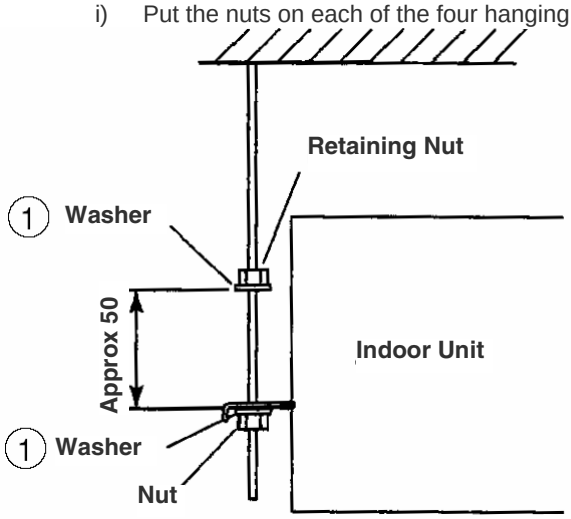

d) Hanging the Indoor Unit

i) Hook the suspension bracket to the nut and washer of each hanging bolt, as shown starting at the opposite side to service cover side.

ii) After checking that the nut and washer are correctly fixed by the retainers of the suspension bracket, hook the suspension bracket of the service cover side to the nut and washer. (Put the sling bolts away from the unit when hooking.)

iii) Piping and wiring work will be required in the ceiling after hanging the unit. Therefore, determine the drawing direction of pipe after piping and wiring work should be carried out up to the connecting positions before hanging the unit.

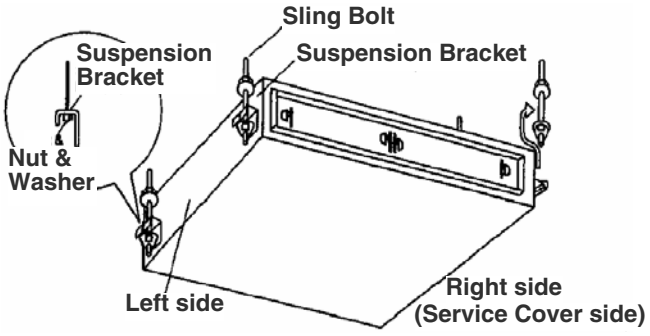

e) For reasons of the disaster prevention, the distance between under the roof and wall surface should be followed as shown in the figure below.

- Use a non-flammable material for the duct.

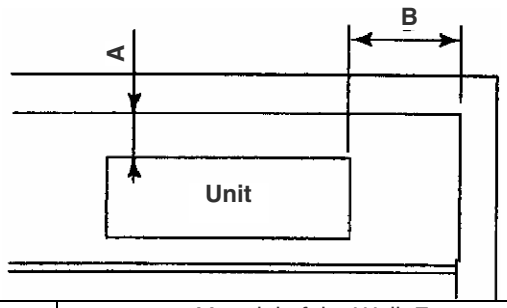

	Material of the Wall, Frame	
	Flammable	Non-flammable
A	Min 100cm	Min 10cm
B	Min 60cm	Min 5cm

f) If decided to keep the flange at discharge side, fix screw ② at 8 positions. However, if decided not to keep the flange, remove 4 screws that fixed to the flange.

Fix in factory

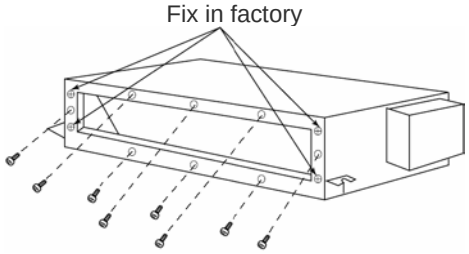

g) Adjusting of the Unit Level

i) Check to ensure that the foundation is flat, taking into account the maximum foundation gradient. If not, it will cause malfunction of float switch or no operation. Subsequently, drain water will drop from ceiling

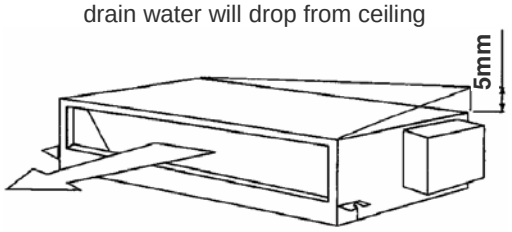

ii) The unit should be installed so that the rear side of the unit is slightly (0mm to 5mm) lower than the fronts side, in order to prevent incorrect positioning of the drain discharge.

iii) Tighten the bolts of the sling nuts with the suspension brackets after adjustment is completed. Special plastic paint must be applied to the bolts in order to prevent them from loosening. Keep the unit as well as relevant equipment covered with vinyl

h) Connecting Return Duct and Supply Duct

i) The return duct should be connected with the indoor through canvas ducts between inlet side of the indoor unit and ceiling of the room. The supply duct should be connected with the indoor unit through canvas ducts. In order to avoid abnormal sound vibration. The unit is equipped with a pre-drilled duct flange for the return and supply duct connection.

ii) Attach the vibration proof rubber to Sling bolt in order to avoid abnormal sound vibration.

iii) Natural frequency is 9 to 21Hz

iv) Duct material should be non-inflammable material.

v) Perform the heat insulation work over the duct and the duct flange for dew protection.

① CAUTION

- If a lower sound level is further required, install silencer (field-supplied)
- The facility design should be “Unit External Static Pressure = Duct Pressure Loss Suction / Discharge Loss”. If the duct pressure loss becomes under to the unit external static pressure, air speed will get larger and lead to the occurrence of loud noise, splashing water and the trigger of motor protection mechanism. If the unit external static pressure becomes under to the duct pressure loss, some problems such as inability to change the air speed may occur. Set the air flow control damper or shift the static pressure control switch to adjust to get almost equal level between the external static pressure and the duct pressure loss. (See “Setting of External Pressure” section for the details)
- Basically this unit is designed to install the ducts on the inlet side and the outlet side. Ask for more information for using the return ducts in the ceiling.

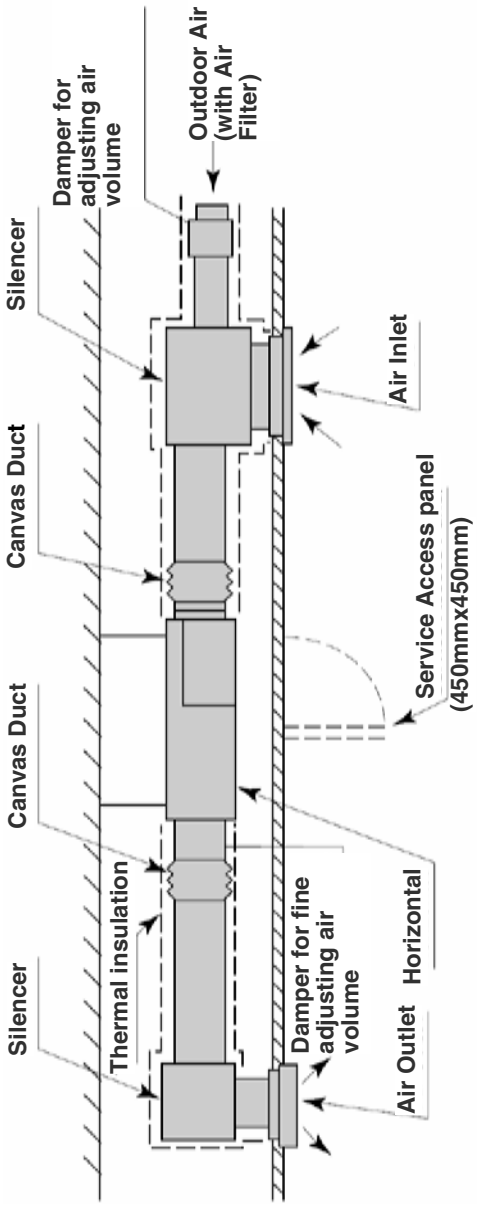

- Select the indoor unit position, fixing direction of air outlet so that cool/hot air reaches all the room. Standard position of the indoor unit is with the wall side on the ceiling.
- Remove the factory fitted filter and filter holders before installing of full duct type.

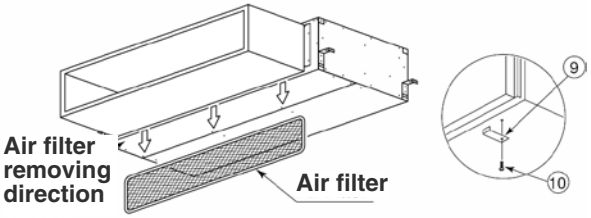

Inlet air direction change instructions

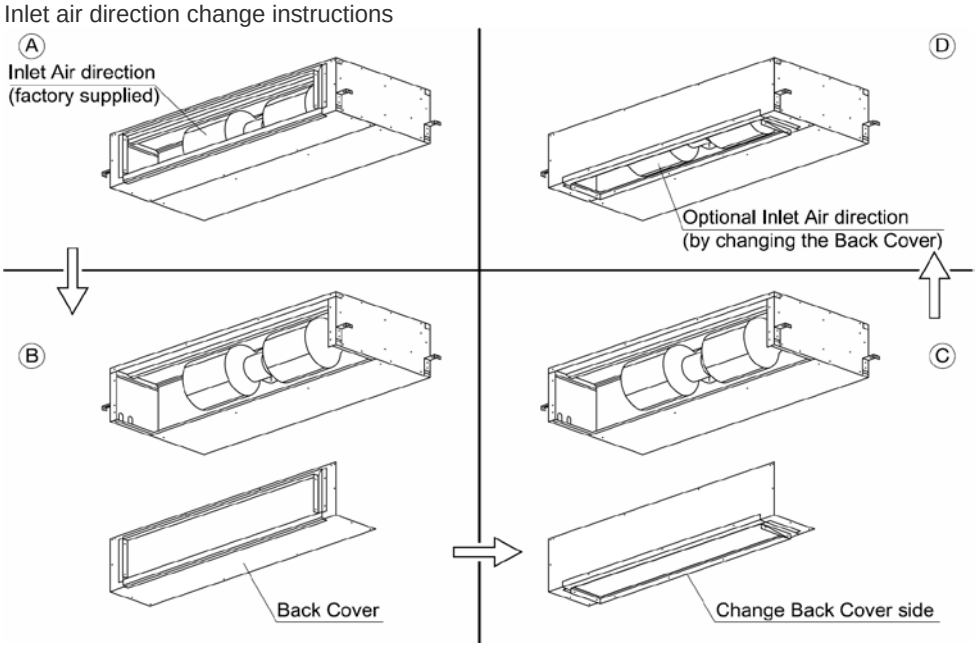

5. Installation of wired remote controller

a. Connection to the electrical box
- Remove the cover of electric box
- Connect the connector of wired remote controller to CN1102.
- Assemble back the cover of electrical box

b. Wiring installation for wired remote controller (2 methods)
- Wired remote controller casing can be opened by pressing the slots with minus screw driver (see below diagram)

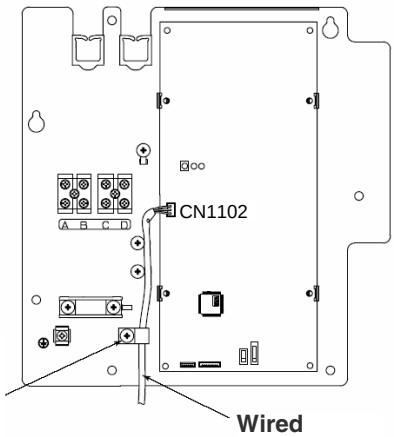

After unscrew the bond, put the wired remote control cord and fix back with screw

Wired remote controller

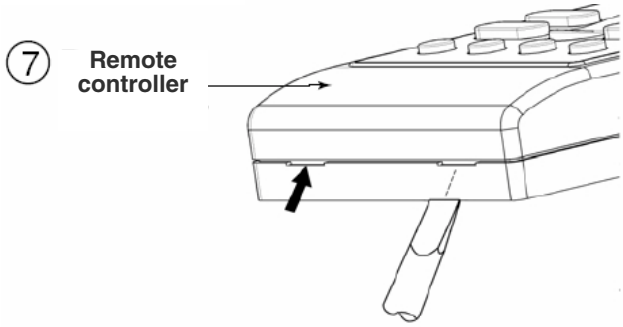

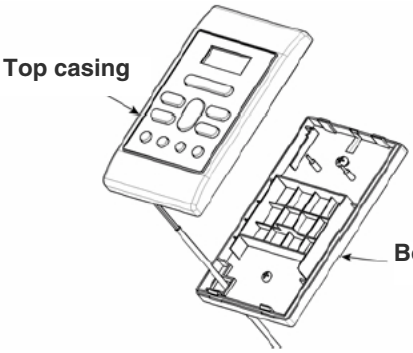

- Decide the fixing location of remote controller so that the length of wire shall be within 15 meters.

⚠ CAUTION

- Do not cut the provided wire. Excess wire should be properly wound and fitted at safe place
- Do not join the wire with additional wire.
- When connecting the wires via the wall's recessed slot:

7. Fix the bottom casing to the wall by the provided screw
8. Assemble the top casing to the fixed bottom casing. (Refer to the illustration below for detail installation

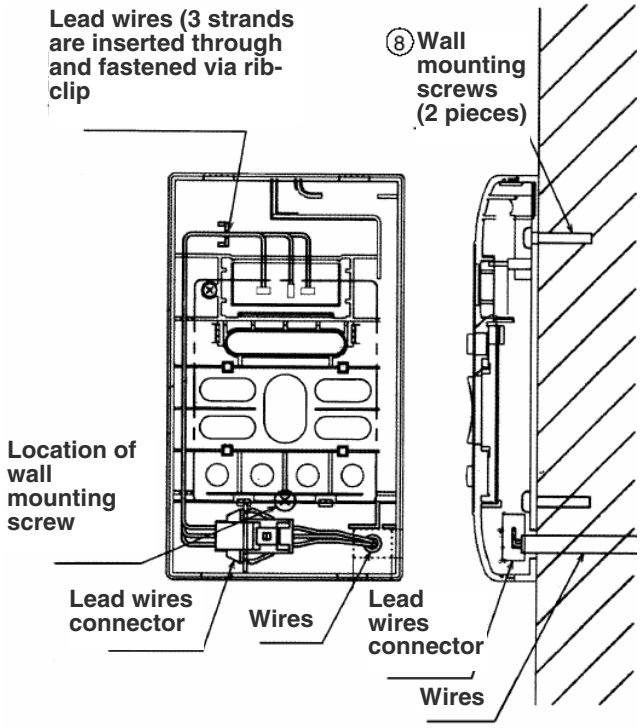

- When the wires to be connected from inside top portion of top casing;

1. Break off a perforated aperture located at the top portion of the bottom casing by nipper. Remove sharp edges around the aperture by cutter.
2. Fix the bottom casing to the wall by the screw provided.
3. Connect the wires to the lead wires connector.
4. Mount the wires through the provided slot on top casing.
5. Assemble the top casing to the fixed bottom casing. (Refer to the illustration below for detail installation)

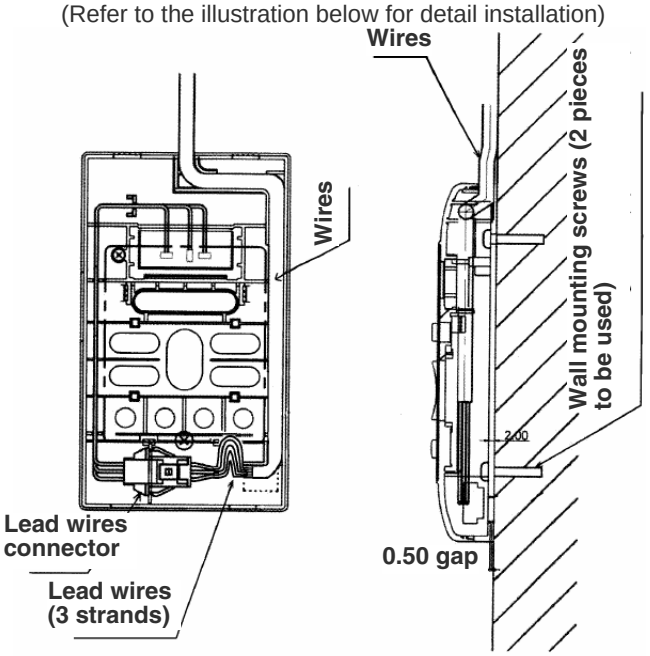

9. Installation of wireless remote controller (optional))

- The remote controller can be placed in its holder which is fixed on wall or beam
- To operate the remote controller at its holder, please ensure that the unit can receive signal transmitted from the controller at the place where the holder is to be fixed. The unit will beep when signal is received from the remote controller. The signal transmission is weakening by fluorescent light. Therefore, during the installation of the remote control holder, please switch on the light, even during day time, to determine the mounting location of the holder.

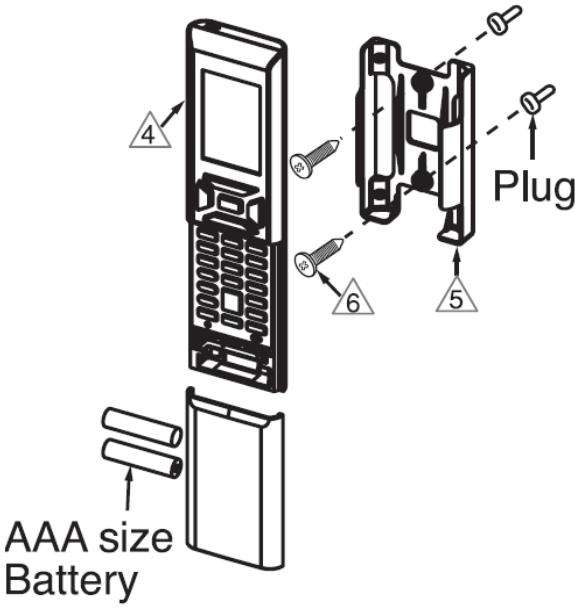

Installation of display panel (Optional)

- Select an installation position on ceiling or wall where there is no obstacle to interrupt signal reception.
- Loosen screws of panel installation plate so that bracket can be slightly moved.
- Match brackets to the opening on ceiling or wall and tighten screws until bracket is firmly secured to ceiling material.
- Install the panel cover so inside claws are securely hooked to the panel installation plate
- Conduct the indoor unit side housing of display panel cord to the electric box of the indoor unit an connect it with the housing at the side of the unit.

① CAUTION

- Please disconnect wired remote controller connector at CN18 if to use wireless remote controller.

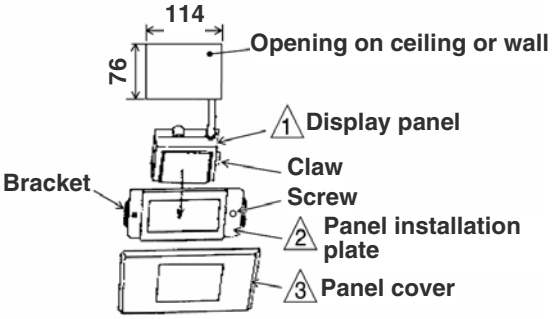

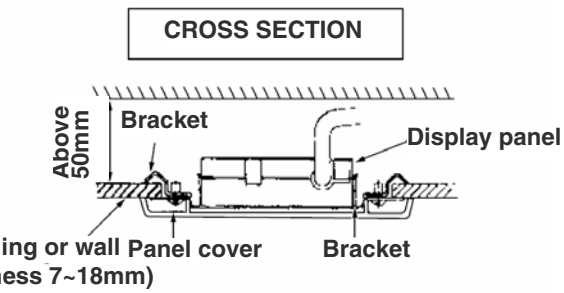

Connetion of discharge duct and display panel lead wires (Optional)

- Connect the motor connector of discharge duct to the connector CN8 (see diagram below)
- Attach connector of this panel of the connector CN11A on the control PWB>

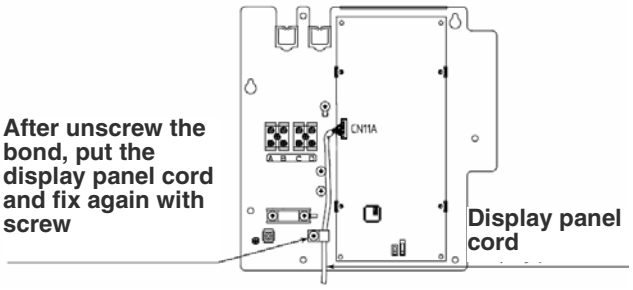

10. Setting of external static-pressure switch

- Remove lid of electric box and set the "STATIC PRESSURE" switch.

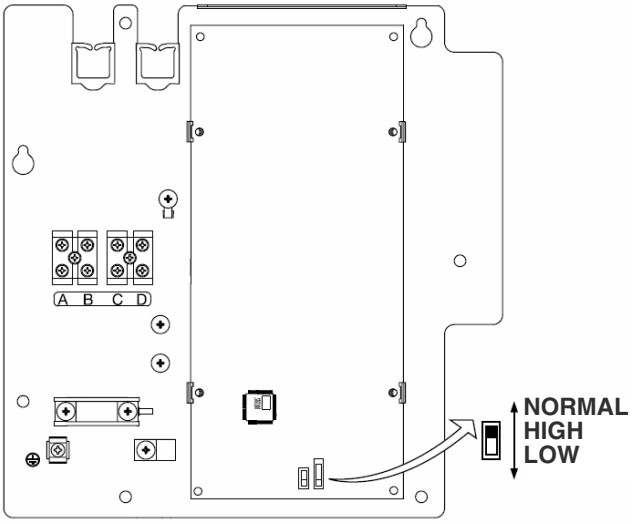

HIGH : 80Pa
NORMAL : 50Pa
LOW : 30Pa

- If not set to HIGH STATIC-PRESSURE, there will be reduction of cooling and heating capacities. (At the time of delivery, the switch is set to "NORMAL")

11. When connecting the H-Link

- When connecting to H-link, a separately purchased RAC adaptor is required.
- To install the wiring, the electrical box cover must be opened.
- Connect the RAC adaptor to CN1101.
- The connection cord and power cables are to be arranged and tied up as per the diagram as shown below.
- Please refer to the respective user manuals of the RAC adaptor, for further details.

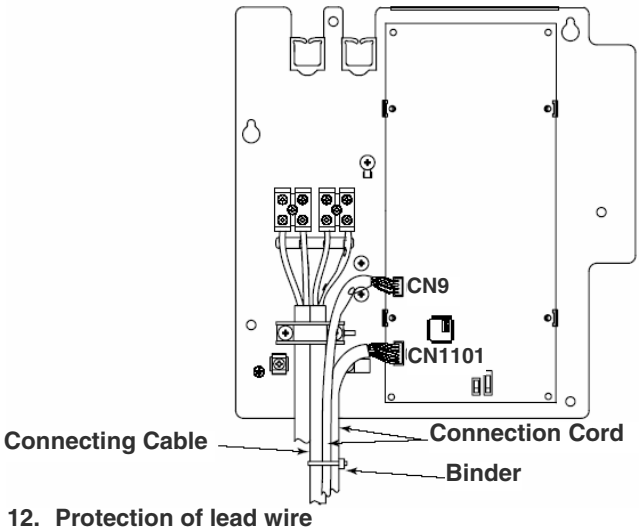

12. Protection of lead wire

- Wrap aluminum tape around PVC tube between electric box and indoor unit (cord band).

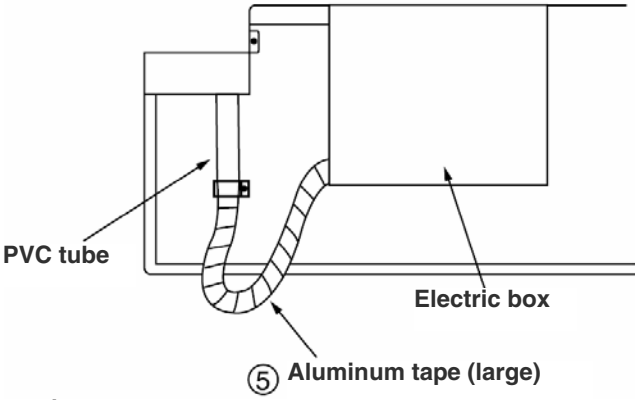

13. Operation test

- Please ensure that the air conditioners in normal operating condition during the operation test.
- Explain to your customer the proper operation procedures as described in the user manual.
- If the indoor unit does not operate, check to see that the connections are correct.

⚠ CAUTION

- Trial run should be conducted on one unit at a time to check for incorrect wiring of connecting cord.

10.2 INSTALLATION OF OUTDOOR UNIT

10.2.1. SINGLE SPLIT AND MULTI TYPE OUTDOOR

Please read the safety precautions carefully before operating the unit. The contents of this section are vital to ensure safety. Please pay special attention to the following signs.

⚠WARNING Incorrect methods of installation may cause death or serious injury

⚠CAUTION Improper installation may result in serious consequences.

Make sure to connect earth wire

This sign indicates prohibition

Be sure that the unit operates in proper condition after installation. Explain to customer the proper way of operating the unit as described in the user's guide.

⚠ WARNING

- Please request your sales agent or qualified technician to install your unit. Water leakage, short circuit of fire may occur if you do the installation work yourself.
- Please observe the instructions stated in the installation manual during the process of installation. Improper installation may cause water leakage, electric shock and fire.
- Make sure that the units are mounted at locations which are able to provide full support of the weight of the units. If not, the units may collapse and impose danger.
- Observe the rules and regulations of the electrical installation and the methods described in the installation manual when dealing with the electrical work. Use power cables approved by the authorities of your country.
- Be sure to use the specified wire for connecting the indoor and outdoor units. Please ensure that the connections are tight after the conductors of the wire are inserted into the terminals. Improper insertion and loose contact may cause over-heating and fire.
- Please use the specified piping set for the correct refrigerant gas. Otherwise, this may result in broken copper pipes or faults
- When installing or removing an air conditioner, don not allow air or moisture to remain in the refrigeration cycle. Otherwise, pressure in the refrigeration cycle may become abnormally high may cause a rupture.
- Be sure to ventilate fully in case refrigerant gas leaks while at work. If the refrigerant gas comes into contact with fire, poisonous gas might be discharged.
- After completion of installation work, check to make sure that there is no refrigeration gas leakage. If the refrigerant gas leaks into the room, coming into contact with fire in a fan-driver heater, space heater, etc; poisonous gas may be emitted.
- Unauthorized modifications to the air conditioner may be dangerous. If a breakdown occurs, please contact a qualified air conditioner technical or electrician. Improper repairs may result in water leakage, electric shock and fire.
- Be sure to connect the earth wire from power supply wire to the outdoor unit and between the outdoor and indoor unit. Improper grounding may cause electric shock.

⚠ CAUTION

- A circuit breaker or fuse must be installed. Without a circuit breaker or fuse, the danger of electric shock exists. A main switch with a contact gap of more than 3.5mm has to be installed in the power supply line to the outdoor unit.
- Do not install the unit near a location where there is a flammable gas. The indoor unit may catch fire if flammable gas leaks around it.
- Be sure to tighten the flare nut to the specified torque using a toque wrench. If the flare nut is tightened excessively, it may crack as time elapses, causing the refrigerant leakage.
- Please ensure smooth flow of water when installing the drain hose.
- Piping shall be suitable supported with a maximum spacing of 1m between supports
- An IEC approved power cord should be used. Power cord type: NYM.

The choice of mounting site

- **OUTDOOR UNIT**

⚠WARNING

- The Outdoor unit must be mounted at a location which can support heavy weight. Otherwise, noise and vibration will increase.

⚠CAUTION

- Do not expose the unit under direct sunshine or rain. Besides, ventilation must be good and clear of obstruction.
- The air blown out of the unit should not pint directly to animals or plants.
- The clearances of the unit from top, left, right and front are specified in figure below. At least 3 of the above sides must be open air.
- Be sure that the hot air blown out of the unit and noise do not disturb the neighborhood.
- Do not install at a location where there is flammable gas, steam, oil and smoke.
- The location must be convenient for water drainage.
- Place the Outdoor unit and its connecting cord at least 1m away from the antenna or signal line of television, radio or telephone. This is to avoid noise interference.
- Do not install outdoor unit facing strong wind direction. It may damage the fan motor.
- Decide the location for piping after sorting out the different types of pipe available.
- When removing side cover, please pull the handle after undoing the hook by pulling it downward.

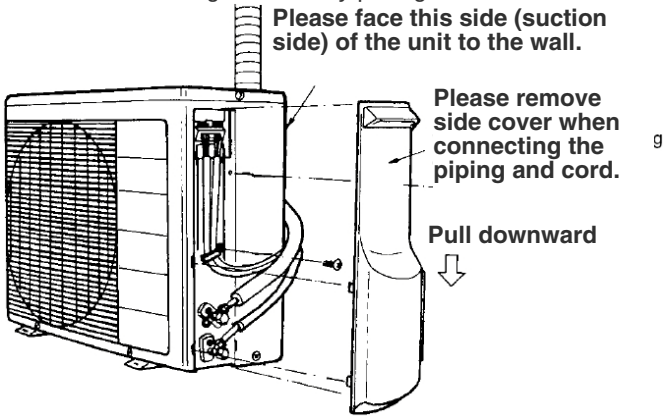

Figure showing the Installation of Outdoor unit
Operation space, Length and Height difference

- Single split

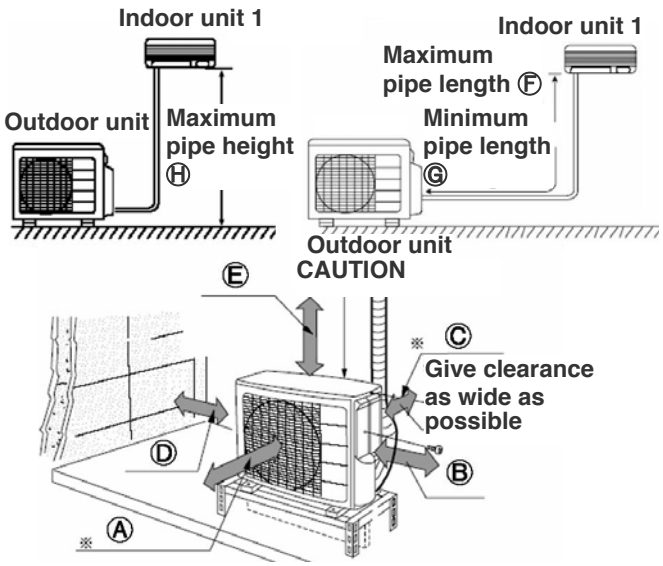

Models:	Ⓐ (m)	Ⓑ (m)	Ⓒ (m)	Ⓓ (m)	Ⓔ (m)	Ⓕ (m)	Ⓖ (m)	Ⓗ (m)
RAC-18WSA	>0.2	>0.2	>0.05	>0.1	>0.2	20	5	10
RAC-25WSA	>0.2	>0.2	>0.05	>0.1	>0.2	20	5	10
RAC-35WSA	>0.2	>0.2	>0.05	>0.1	>0.2	20	5	10
RAC-18WSAN	>0.3	>0.2	>0.05	>0.1	>0.2	20	5	10
RAC-25WSAN	>0.3	>0.2	>0.05	>0.1	>0.2	20	5	10
RAC-35WSAN	>0.2	>0.2	>0.05	>0.1	>0.2	30	5	10
RAC-18WSPA	>0.3	>0.2	>0.05	>0.1	>0.2	20	5	10
RAC-25WSPA	>0.3	>0.2	>0.05	>0.1	>0.2	20	5	10
RAC-35WSPA	>0.2	>0.2	>0.05	>0.1	>0.2	30	5	10
RAC-25WXA	>0.3	>0.2	>0.05	>0.1	>0.2	20	5	10
RAC-35WXA	>0.3	>0.2	>0.05	>0.1	>0.2	20	5	10
RAC-50WXA	>0.2	>0.2	>0.05	>0.1	>0.2	30	5	10
RAC-18WPA	>0.4	>0.2	>0.15	>0.1	>0.2	20	5	10
RAC-25WPA	>0.4	>0.2	>0.15	>0.1	>0.2	20	5	10
RAC-35WPA	>0.3	>0.2	>0.05	>0.1	>0.2	20	5	10
RAC-50WPA	>0.7	>0.2	>0.1	>0.1	>0.2	20	3	10
RAC-60WPA	>0.7	>0.2	>0.1	>0.1	>0.2	30	3	20
RAC-70WPA	>0.7	>0.2	>0.1	>0.1	>0.2	30	3	20
RAC-18WEA	>0.4	>0.2	>0.15	>0.1	>0.2	20	5	10
RAC-25WEA	>0.4	>0.2	>0.15	>0.1	>0.2	20	5	10
RAC-35WEA	>0.3	>0.2	>0.05	>0.1	>0.2	20	5	10
RAC-50WEA	>0.2	>0.2	>0.05	>0.1	>0.2	20	5	10

- Multisplit

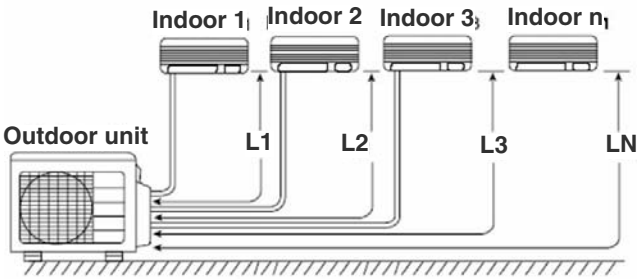

(L1+L2+L3++L_n)= Total maximum Length Ⓕ$_{TOTAL}$
Minimum piping length for each indoor unit Ⓖ is 5m
Maximum piping length for one indoor unit Ⓕ is 25m.

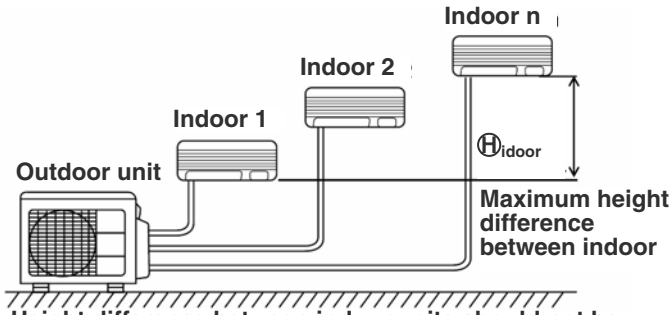

Height difference between indoor units should not be more than Ⓗ$_{Idoor}$ 5m.

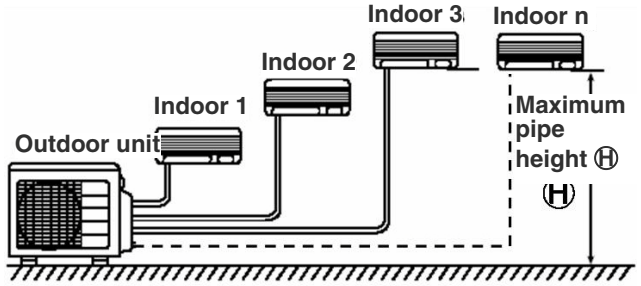

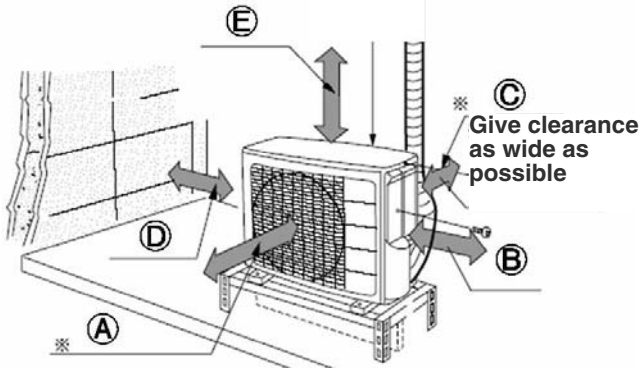

- **Only for RAM-130NP6A**

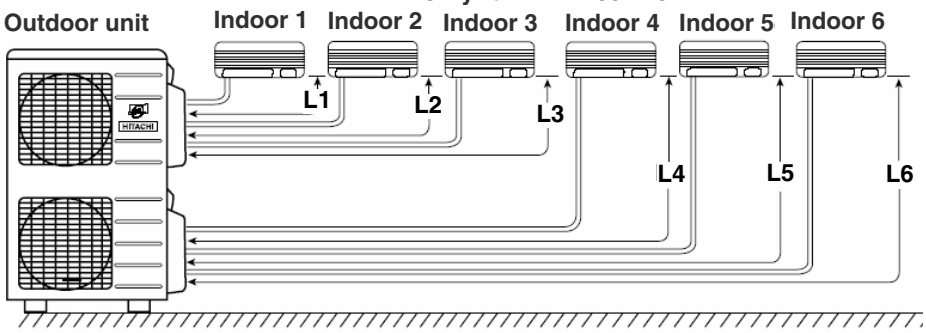

ⓘCAUTION

- Indoor 3 and Indoor 6 connections to outdoor are COMPULSORY. If not, ICING at condenser base may occur in the winter season.

Models:	Ⓐ (m)	Ⓑ (m)	Ⓒ (m)	Ⓓ (m)	Ⓔ (m)	Ⓕ$_{TOTAL}$ (m)	Ⓖ (m)	Ⓗ (m)	Ⓗ$_{Idoor}$ (m)
RAM-36NP2A	>0.7	>0.2	>0.1	>0.1	>0.2	35	5	20	5
RAM-53NP2A	>0.7	>0.2	>0.1	>0.1	>0.2	35	5	20	5
RAM-53NP3A	>0.7	>0.2	>0.1	>0.1	>0.2	45	5	20	5
RAM-68NP3A	>0.7	>0.2	>0.1	>0.1	>0.2	60	5	20	5
RAM-70NP4A	>0.7	>0.2	>0.1	>0.1	>0.2	60	5	20	5
RAM-90NP5A	>0.5	>0.2	>0.1	>0.1	>0.2	75	5	20	5
RAM-130NP6A	>0.7	>0.2	>0.1	>0.1	>0.2	90	5	20	5

Installation of refrigerating pipes and air removal

Please refer to Chapter 11 Refrigerant Piping and Refrigerant Charge

Connecting of Power cord

Please refer to the Chapter 13 Electrical wiring.

10.3 FINAL STAGE OF INSTALLATION

10.3.1. INSULATION AND MAINTENANCE OF PIPE CONNECTIONS

- The connected terminals should be completely sealed with heat insulator and then tied up with rubber strap.
- Please tie the pipe and power line together with vinyl tape as shown in the figure showing the installation of Indoor and Outdoor units. Then fix their position with holders.
- To enhance the heat insulation and to prevent water condensation, please cover the outdoor part of the drain hose and pipe with insulation pipe.
- Completely seal any gap with putty

Insulation material for pipe connection

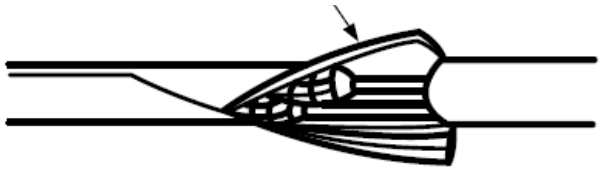

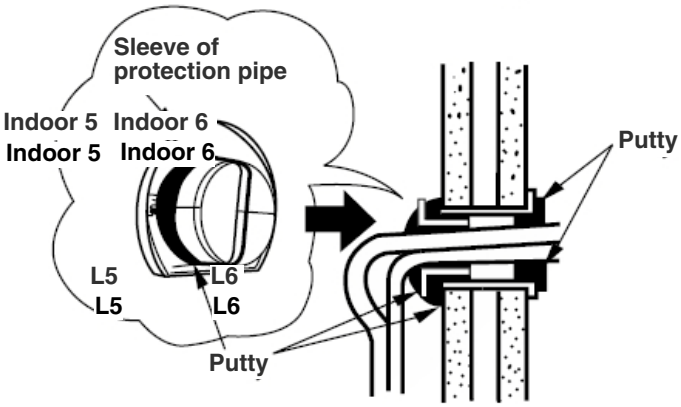

10.3.2. INSTALLATION OF REMOTE CONTROLLER

- The remote controller can be placed in its holder which is fixed on wall or beam
- To operate the remote controller at its holder, please ensure that the unit can receive signal transmitted from the controller at the place where the holder is to be fixed. The unit will beep when signal is received from the remote controller. The signal transmission is weaken by the fluorescent light. Therefore, during the installation of the remote control holder, please switch on the light, even during day time, to determine the mounting location of the holder.

The controller must be hooked onto the hook at the lower part of the holder. Push in the remote controller in the direction as shown in figure below.

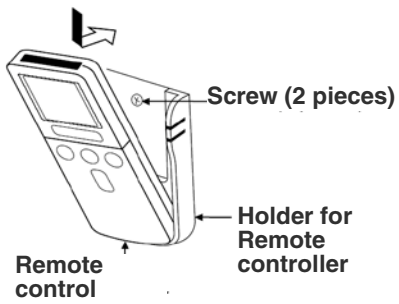

11 REFRIGERANT PIPING AND REFRIGERANT CHARGE

CONTENTS

11 REFRIGERANT PIPING AND REFRIGERANT CHARGE _____ 11-1

11.1. REFRIGERANT PIPING _____ 11-2

11.1.1. Preparation of pipe _____ 11-2
11.1.2. Pipe Connection _____ 11-2
11.1.3. Removal of air from the pipe and gas leakage inspection _____ 11-2

11.2. RECOVERY OF REFRIGERANT DURING RELOCATION OR UNINSTALLING OF UNIT. _____ 11-3

11.1. REFRIGERANT PIPING

11.1.1. PREPARATION OF PIPE

- Use a pipe cutter to cut the copper pipe

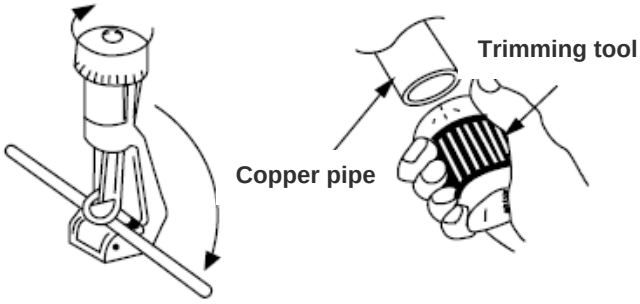

CAUTION

- Jagged edge will cause leakage
- Point the side to be trimmed downwards during trimming to prevent copper chips from entering the pipe
- Before flaring, please put on the flare nut and use exclusive tool

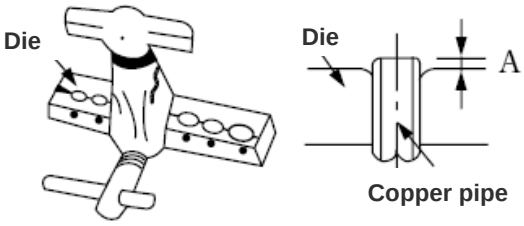

Outer diameter (Ø)	A (mm)	
	Imperial flaring tool	Rigid flaring tool
6.35mm (1/4")	0~0.5 mm	1.0 mm
9.52mm (3/8")	0~0.5 mm	1.0 mm
12.7mm (1/2")	0~0.5 mm	1.0 mm
15.88mm (5/8")	0~0.5 mm	1.0 mm

11.1.2. PIPE CONNECTION

Caution

- In case of removing flare nut of an indoor unit, first remove a nut of small diameter side, or else a seal cap of big diameter side will fly out. Prevent water from entering into piping when working
- Please be careful when bending the copper pipe.
- Screw in manually while adjusting the center. After that, use a torque wrench to tighten the connection.

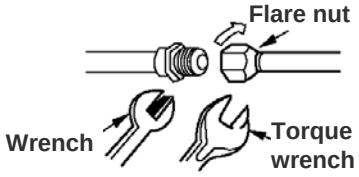

		Outer dia of pipe	Torque N.m (kgf.cm)
Small dia side		**6.35mm (1/4")**	**13.7~18.6 (140~190)**
Large dia side		**9.52mm (3/8")**	**34.3~44.1 (350~450)**
		12.7mm (1/2")	**44.1~53.9 (450~550)**
		15.88mm (5/8")	**49.0~58.8 (500~600)**
Valve head cap	Small dia side	**6.35mm (1/4")**	**19.6~24.5 (200~250)**
	Large dia side	**9.52mm (3/8")**	**19.6~24.5 (200~250)**
		12.7mm (1/2")	**29.4~34.3 (300~350)**
		15.88mm (5/8")	**29.4~34.3 (300~350)**
Valve core cap			**12.3~15.7 (125~160)**

11.1.3. REMOVAL OF AIR FROM THE PIPE AND GAS LEAKAGE INSPECTION

■ Procedures of using Vacuum Pump for Air Removal

①As shown in figure below , remove the cap of valve core. Then, connect the charge hose. Remove the cap of valve head. Connect the vacuum pump adaptor to the vacuum pump and connect to

When the meter reaches -101kPa (-76cmHg) during pumping, fully tighten the shuttle

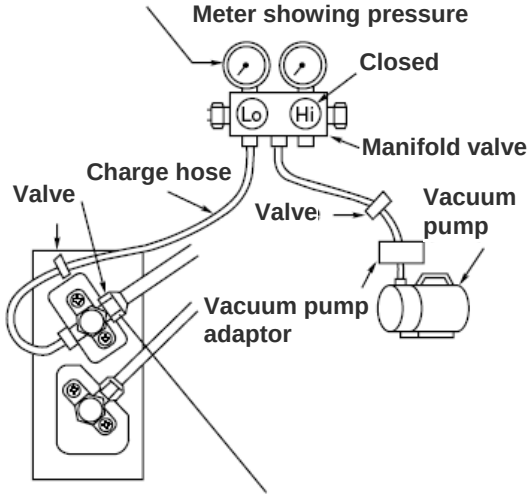

When pumping starts, slightly loosen the flare nut to check of air sucked in. Then tighten the flare nut.

②Fully tighten the "Hi" shuttle of the manifold valve and completely unscrew the "Lo" shuttle. Run the vacuum pump for about 10~15 minutes, then completely tighten the "Lo" shuttle and switch off the vacuum pump

③Completely unscrew the spindle of the service valve (at 2 places) in anticlockwise direction to allow the flow of coolant (using Hexagonal Wrench key).

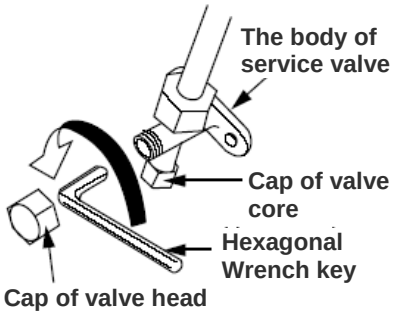

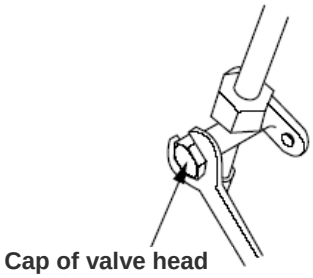

④Remove the charge hose and tighten the cap of valve head. Check the cap's periphery if there is any gas leakage. The task is then completed.

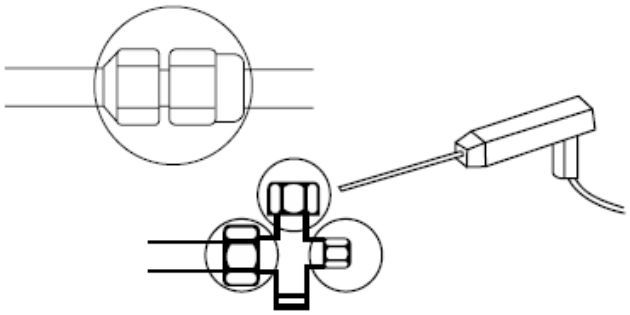

■ **Gas Leakage Inspection**

Please use gas leakage detector to check if leakage occurs at the connection of Flare nut as shown on the right.

11.2. RECOVERY OF REFRIGERANT DURING RELOCATION OR UNINSTALLING OF UNIT.

1) Switching on the outdoor unit's service switch will run the forced cooling operation
2) After operating for around 5 minutes, rotate the service valve spindle located at the side of the small pipe rim, in a clockwise direction to achieve a full shut off.
3) After operating for around 2~3 minutes, rotate the service valve spindle located at the side of the large pipe rim, in a clockwise direction to attain a full shut off.
4) Immediately stop the forced cooling operation and switch off the power supply.
5) Use a spanner or similar tools to tighten fully all valve cap and valve core cap to their specified torque values.
6) Install and tighten the seal caps and flared nuts on all connecting mouths of each and every piping installed.

12 DRAIN PIPING

CONTENTS

12 DRAIN PIPING 12-1
12.1 WALL TYPE INDOOR 12-2
12.2 FLOOR TYPE INDOOR 12-2
12.2.1 DRAIN PIPE 12-2
12.3 4 WAY CEILING CASSETTE 12-2
12.3.1 Drain Pipe installation 12-2
12.3.2 Connection of Drain Pipe 12-2
12.4 DUCT TYPE INDOOR 12-3
12.4.1 Drain Pipe installation 12-3
12.4.2 Connection of Drain pipe 12-3
12.4.3 Checking of drawing hose 12-4
12.5 DRAIN PUMP 12-5
12.5.1 Build in drain pump 12-5
12.5.2 Specification of drain pump 12-5
12.6 CONDENSED WATER DISPOSAL OF OUTDOOR UNIT 12-5
12.7 Drain Pipe Accessories 12-6

12.1 WALL TYPE INDOOR

Installation of drain hose

CAUTION:

- You are free to choose the side (left or right) for the installation of drain hose. Please ensure the smooth flow of condensed water of the indoor unit during installation. (Carelessness may result in water leakage)

CAUTION

- Be sure that the drain hose is not loosely connected or bent

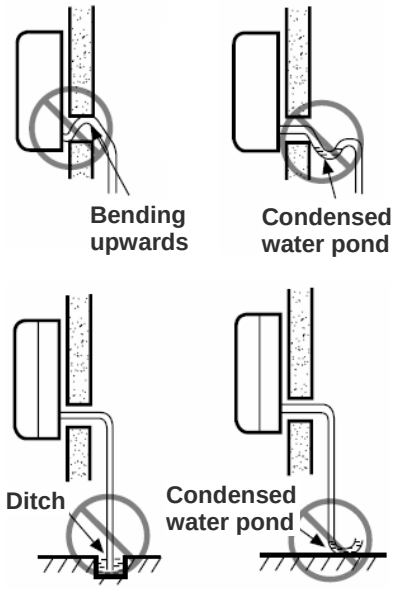

12.2 FLOOR TYPE INDOOR

12.2.1 DRAIN PIPE

- Make sure drain pipe slopes downward so that drain flows smoothly without being trapped in the middle.
- The drain hose (connecting port outer diameter: 16mm or 20mm, length: 600mm) is included in the indoor unit. Prepare a drain pipe as shown in the following figure.
- To prevent condensation, the indoor drain pipe should be covered with heat insulation material with a thickness of more than 10mm.
- After piping is completed, check to make sure that drain discharges smoothly. Seal the drain pipe tightly with tape to keep dirt out.

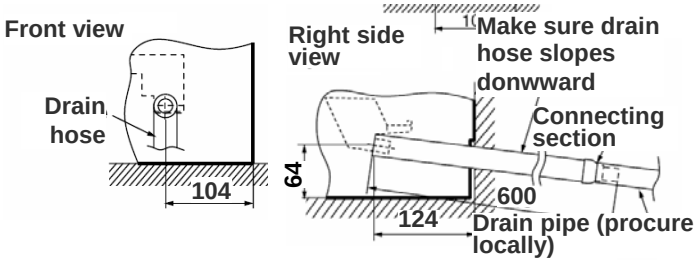

12.3 4 WAY CEILING CASSETTE

12.3.1 DRAIN PIPE INSTALLATION

- Use PVC pipe VP20 (O.D. 26mm) for drain pipe.
- Be sure to roll insulation (thickness 10mm or more) fro the drain pipe at the indoor side.
- Always draw the drain pipe downward so that water flows smoothly. Fix it (ex. by hanger) to prevent a peak and trap

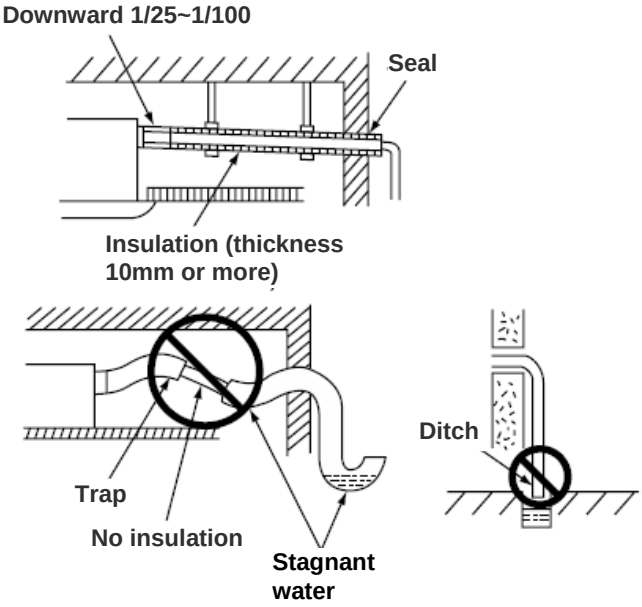

- In case drain piping cannot be done smoothly due to obstacles, it can also be arranged outside main unit as shown in the drawing below.

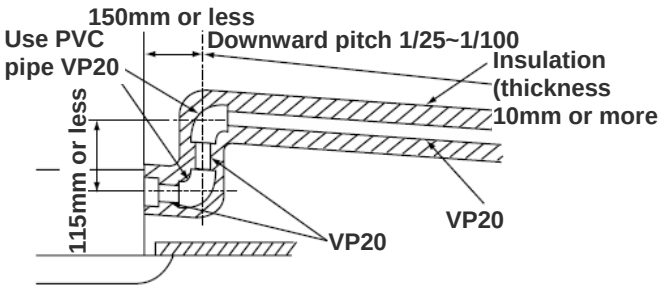

12.3.2 CONNECTION OF DRAIN PIPE

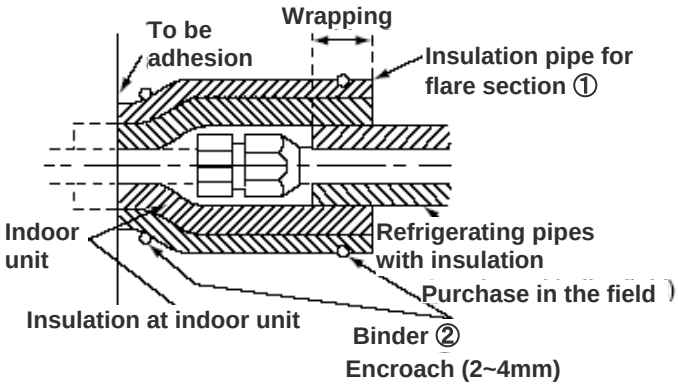

- Securely glue connection part of drain hose and PVC pipe, using PVC adhesive.
- If gluing of drain hose and PVC pipe is too weak, water leakage may occur. Be sure to wrap generally-available insulator (10mm or more of

foamed polyethylene) around drain hose, inside the house, for insulation heat.

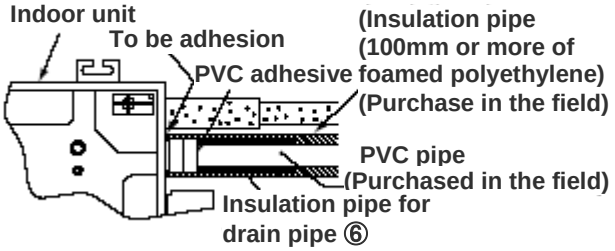

- Check drain for water leakage. Perform after connecting power.
- If inspection of drainage is not done, water drop may occur
- Add water to water pan of indoor unit as shown below.

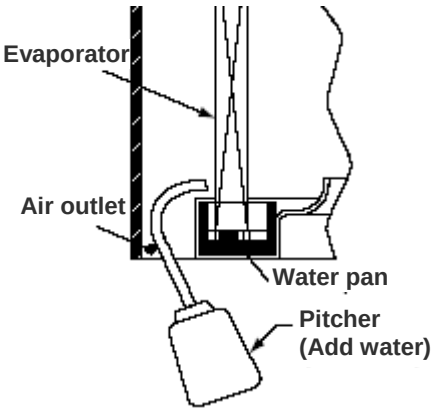

- Perform test running of drain pump to check drainage operation.
  ①Turn power on
  ②Remover cover o felectric box and set the drain pump test run switch to test.
  ③After checking the drainage, return the switch to NORMAL

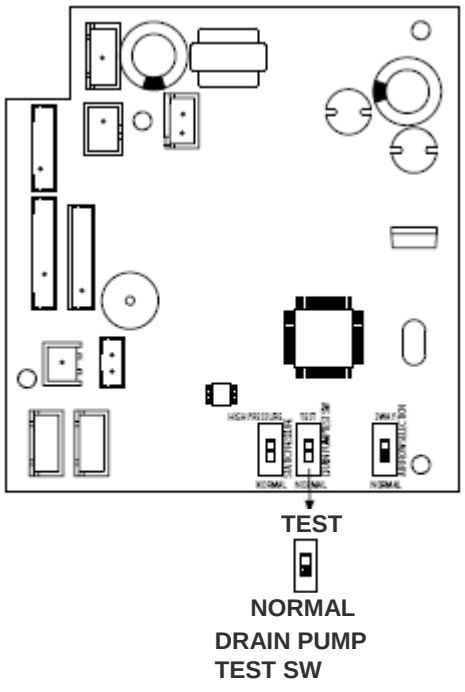

Caution

- If drain pump test run is always set to TEST, drain pump may malfunction

12.4 DUCT TYPE INDOOR

12.4.1 DRAIN PIPE INSTALLATION

- Use PVC pipe (polyvinyl chloride) VP20 with the following outer diameter for(O.D. 26mm) for drain pipe.

Model	Outer diameter
RAD-25RPA/35RPA/50RPA	26 mm
RAD-50PPA/60PPA/70PPA	32 mm

- Be sure to roll insulation (thickness 10mm or more) from the drain pipe at the indoor side.
- Always draw the drain pipe downward so that water flows smoothly. Fix it (ex. by hanger) to prevent a peak and trap

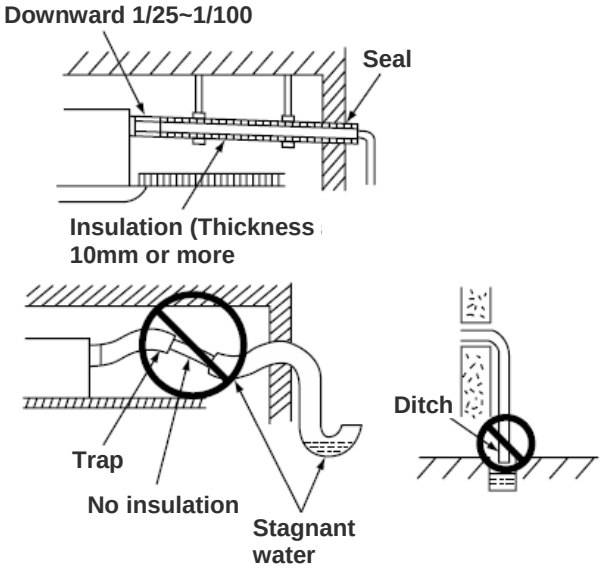

12.4.2 CONNECTION OF DRAIN PIPE

1) Securely glue connection part of drain hose and PVC pipe, using PVC adhesive.

CAUTION

- If gluing of drain hose and PVC pipe is too weak, water leakage may occur.

2) Be sure to wrap generally available insulator (10mm or more of foamed polyethylene) around drain hose, inside the house for insulation heat.

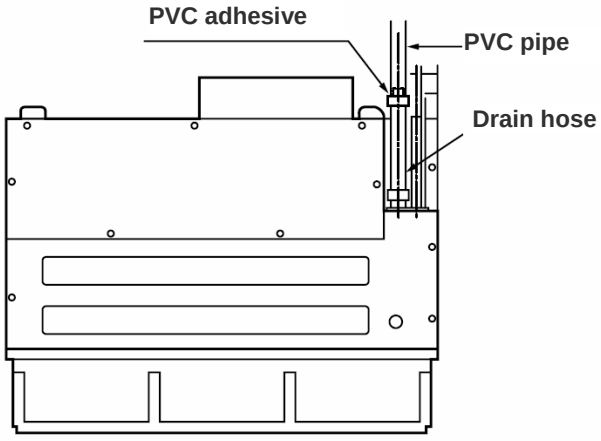

3) Perform checking of drain and water leakage after connecting power supply
   - Add water to water pan of indoor unit as shown below

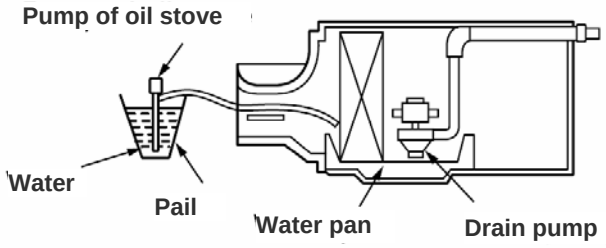

4) Test run method
- Turn power on
- Remove lid of electric box and set the drain pump test run switch to TEST RUN
- After checking the drainage, return the switch to NORMAL

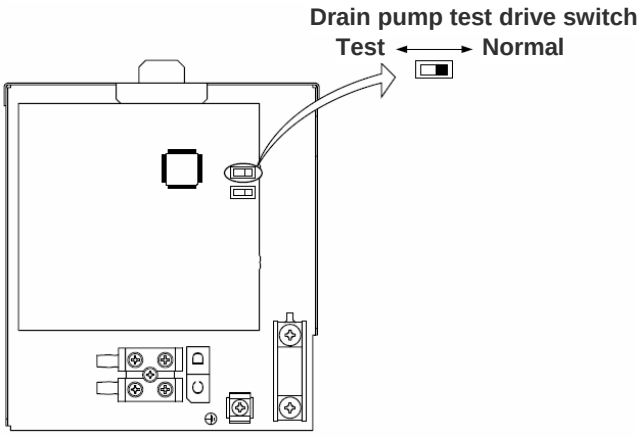

5) Perform test running of drain pump to check drainage operation

Caution

If drain pump test run is always set to TEST, drain pump may malfunction

12.4.3 CHECKING OF DRAWING HOSE

①Connect the separate drain hose to the drain hose that is attached to the indoor unit

②For keeping the smooth flowing of condensed water, the drain hose should be inclined as shown in figure below.

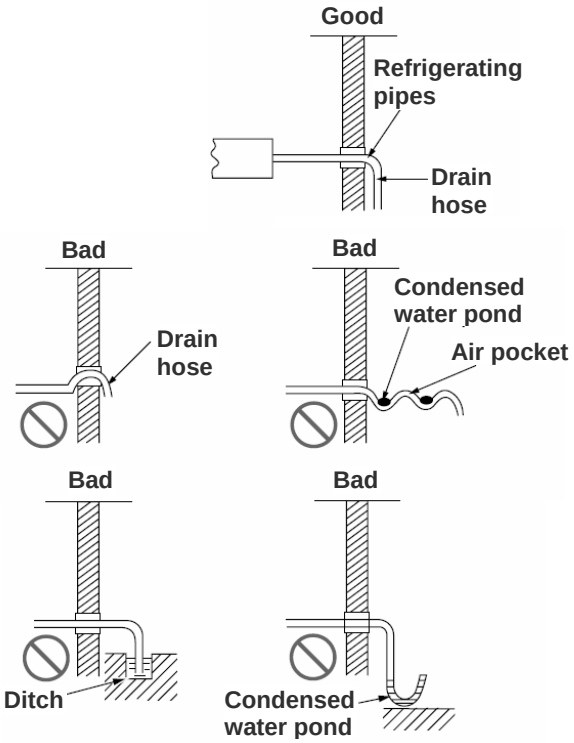

Caution

- Please ensure the smooth flow of condensed water of the indoor unit during installation. (Carelessness may result in water leakage
- Be sure that the hose is not loosely connected or bent
- In case drain piping cannot be done smoothly due to obstacles, it can also be arranged outside of the main unit as shown in the drawing below.
- Maximum drain-up length shall be

Applicable models	Max drain up length
RAD-25RPA/35RPA/50RPA	300mm
RAD-50PPA/60PPA/70PPA	500mm

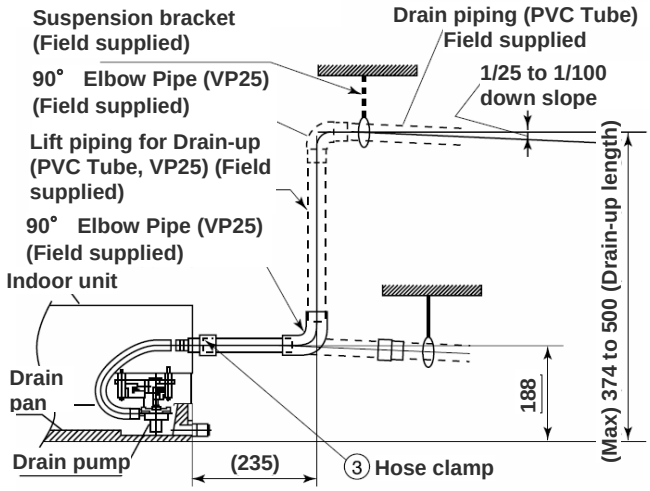

- When the relative humidity of inlet or ambient air exceeds 80%, apply an (field-supplied) auxillary drain pan beneath the indoor unit as show below

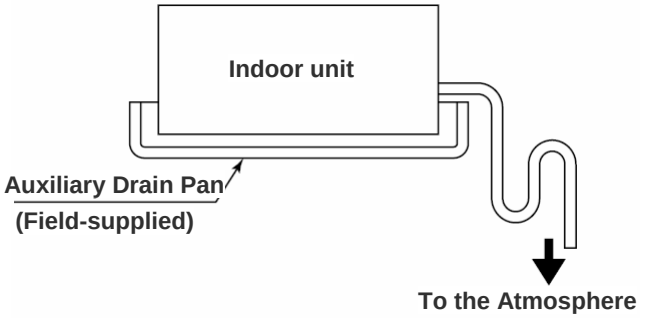

12.5 DRAIN PUMP

12.5.1 BUILD IN DRAIN PUMP

The air conditioner is equipped with an internal drain pump to remove accumulated condensation water from drain pan even while it is operating. A float switch

- Monitors the water level and automatically activates the pump as necessary.

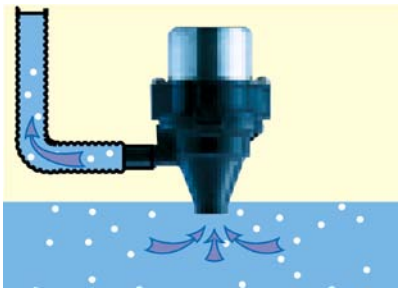

*Applicable for ceiling cassette type indoor and duct type indoor only.

12.5.2 SPECIFICATION OF DRAIN PUMP

Applicable models	RAI-25RPA, RAI-35RPA, RAI 50RPA	RAD-18RPA, RAD-25RPA, RAD-35RPA, RAD-50RPA	RAD-50PPA, RAD-60PPA, RAD-70PPA
Fluid	Water	Water	Water
Fluid temperature °C	0 ~ 40	0 ~ 40	0 ~ 40
Ambient temperature °C	0 ~ 40	0 ~ 40	-10 ~ 50
Max humidity %	95 and below	95 and below	95 and below
Storage temperature °C	-10~70°C	-10~70°C	-20~80°C
Mounting direction	Shall be install upward Slanting gradient should be less than 5 degree	Shall be install upward Slanting gradient should be less than 5 degree	Shall be install upward Slanting gradient should be less than 10 degree
Motor type	DC brushless motor (insulation class E)	DC brushless motor (insulation class E)	DC 2-pole motor (insulation class E)
Maximum lift	Lift 300mm water in rated voltage	Lift 300mm water in rated voltage	Lift 500mm water in rated voltage
Minimum water level	8mm	8mm	6mm
Noise	45dB max	45dB max	37dB max
Insulation resistance	100MΩ at DC500V	100MΩ at DC500V	100MΩ at DC500V
Life span	Operate continuously up to 10,000 hours, under 300mm lift, 10mm water level, rated voltage, and rated water temperature	Operate continuously up to 10,000 hours, under 300mm lift, 10mm water level, rated voltage, and rated water temperature	Operate continuously up to 15,000 hours, under 500mm lift, 10mm water level, rated voltage, and rated water temperature

12.6 CONDENSED WATER DISPOSAL OF OUTDOOR UNIT

- There are holes on the base of Outdoor unit for condensed water to discharge
- In order to drain out the condensed water, the unit is installed on a stand or a block so that the unit is 100mm above the ground as the shown figure. Join the drain pipe to one hole.
- At first insert one portion of the hook to the base (Portion A), then pull the drain pipe in the direction shown by the arrow while inserting the hook into the base. After installation, check whether the drain pipe cling to the base firmly.

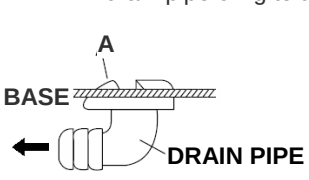

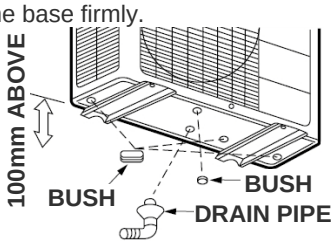

When Use and Install in Cold Areas

- When using in cold region with severe cold climate and heavy snow, water discharged from the heat exchanger will freeze on the base surface and this may block the drainage. In such regions, remove the bush on the bottom face of outdoor unit to prevent water build up leading to icing and blockage. Keep a minimum gap of 250mm between the base and the ground. When using drain pipe, consult your sales agent

12.7 Drain Pipe Accessories

Outdoor Chassis Dimension (W x H x D)	Bush #1	Bush #2	Drain Pipe
700 x 570 x 210	-	PMRA-13JF 917 (1 piece)	PMRAC-07GH4 S10 (1 piece)
700 x 570 x 280	PMRAM-50CNHZ2 916 (2 pieces)	PMRA-13JF 917 (1 piece)	PMRAC-14GH4 907 (1 piece)
750 x 570 x 288	RAC-E40V2 045 (2pieces)	-	RAC-E40V2 046 (1 piece)
850 x 650 x 298	PMRAM-50CNHZ2 916 (3 pieces)	PMRA-13JF 917 (1 piece)	PMRAC-14GH4 907 (1 piece)
850 x 800 x 298	PMRAM-50CNHZ2 916 (3 pieces)	PMRA-13JF 917 (1 piece)	PMRAC-14GH4 907 (1 piece)
925 x 875 x 315	PMRAM-50CNHZ2 916 (3 pieces)	PMRA-13JF 917 (1 piece)	PMRAC-14GH4 907 (1 piece)
950 x 800 x 370	PMRAC-14GH4 907 (3 pieces)	-	PMRAM-90QH5 S38 (1 piece)
855 x 1450 x 308	PMRAC-14GH4 907 (3 pieces)	PMRA-13JF 917 (1 piece)	PMRAM-90QH5 S38 (1 piece)

13 ELECTRICAL WIRING

CONTENTS

13 ELECTRICAL WIRING ____ 13-1
13.1 General Check ____ 13-2
13.2 Electrical wiring for MONOZONE/MULTIZONE Unit ____ 13-2
13.2.1 Procedures of Wiring ____ 13-2
13.2.2 Electrical Wiring for Outdoor unit ____ 13-3
13.2.3 Electrical Wiring for Wall Type Indoor unit ____ 13-4
13.2.4 Electrical Wiring for Floor Type Indoor unit ____ 13-5
13.2.5 Electrical Wiring for 4 Way Ceiling Cassette Type Indoor unit (RAI-25RPA/RAI-35RPA/RAI-50RPA) ____ 13-6
13.2.6 Electrical Wiring for Duct Type Indoor unit (RAD-18RPA/RAD-25RPA/RAD-35RPA/RAD-50RPA/RAD-50PPA/RAD-60PPA/RAD-70PPA) ____ 13-6
13.3 Electrical wiring for SINGLE INVERTER Unit ____ 13-7
13.3.1 Procedures of Wiring ____ 13-7
13.3.2 Electrical Wiring for Indoor unit ____ 13-8
13.3.3 Electrical Wiring for Outdoor unit ____ 13-10

13.1 GENERAL CHECK

ATTENTION:

– *Turn OFF*

– *Check to ensure that the indoor fan and the outdoor fan have stopped before electrical wiring work or a periodical check is performed.*

– *Protect the wires, drain pipe, electrical parts, etc. from rats or other small animals. If not protected, rats or other small animals may gnaw at unprotected parts and at the worst, a fire will occur.*

– *Avoid the wires from touching the refrigerant pipes, plate edges and electrical parts inside the unit. Otherwise, the wires will be damaged and at the worst, a fire will occur.*

CAUTION:

Tightly secure the wires with the cord clamp inside the indoor unit.

NOTE:

Fix the rubber bushes with adhesive when conduit tubes to the outdoor unit are not used.

1. Make sure that the field-selected electrical components (main power switches, circuit breakers, wires, conduit connectors and wire terminals) have been properly selected according to the electrical data given in this technical catalog. Make sure that the components comply with National Electrical Code (NEC).
2. Check to ensure that the power supply voltage is within ±10% of the rated voltage.
3. Check the capacity of the electrical wires. If the power source capacity is too low, the system cannot be started due to the voltage drop.
4. Check to ensure that the ground wire is connected.
5. Power Source Main Switch
   Install a multi-pole main switch with a space of 3.5mm or more between each phase.

13.2 ELECTRICAL WIRING FOR MONOZONE/MULTIZONE UNIT

13.2.1 PROCEDURES OF WIRING

Connect the electrical wiring between the Indoor and Outdoor unit, as shown below. Never connect the wiring by mistake.

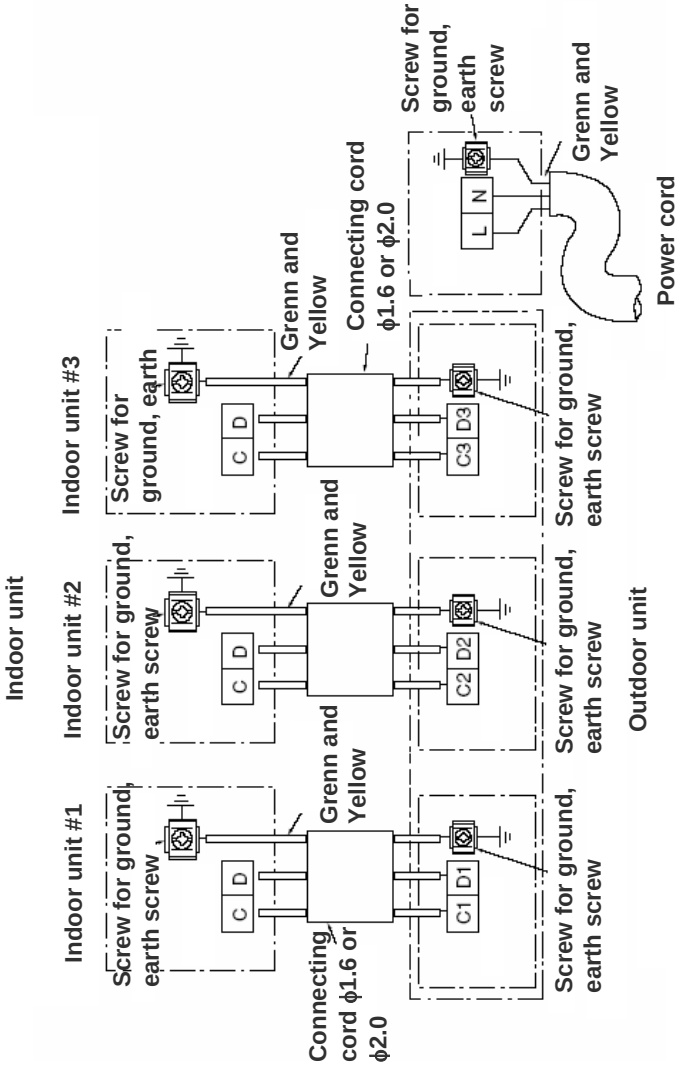

In case of wrong connection, the unit does not operate properly and it may cause malfunction.
The connecting cord must be fixed by the banc which is located near the terminal board.

Connection of connecting cords and power cord

– Cut of the connecting cord, the power cord and strip the insulation of the wire.

– Connect the connecting cord and power cord to the terminal board.

– Fix the connecting cords and power cord with steel band certainly.

WARNING:

– *The naked part of the wire core should be10 mm and fix tem tightly to the terminal. Then try to pull the individual wireto check if the contact is tight. Improper insertion may cause the terminal to burn.*

– *Be sure to use only power cables approved from the authorities from your country. For example in Germany: Cable type : NYM 3x1.5mm^2*

– *Please refer to the installation manuals for wire connection to the terminals of the units. The cabling must meet the standards of electrical installation*
– *There is a AC voltage of 230V between the L and N terminals. Therefore, before servicing, be sure to remove the plug from the AC outlet or switch off the main switch.*

13.2.2 ELECTRICAL WIRING FOR OUTDOOR UNIT

Please remove the side cover for wire connection

WARNING:

– *If you cannot attach the side cover due to the connecting cord, press the connecting cord in direction to the front panel to fix it.*
– *Be sure that the hooks of the side cover are fixed in certainly. Otherwise water leakage may occur and this causes short circuit of faults..*
– *The connecting cord should not touch the service valve or pipes. (It becomes high temperature during heating operation)*

Checking for electric source and the voltage range

Before installation, the power source must be checked and the necessary wiring work must be completed. To ensure poper wiring capacity, refer to the list of wire gauges below for the lead-in from the pole transformer and for the wiring from a switch board of a fuse box to the main switch and outdoor unit in consideration o fthe locked rotor current.

IMPORTANT

Cable length	Wire cross section
Up to 6m	1.5mm^2
Up to 15m	2.5mm^2
Up to 25m	4.0 mm^2

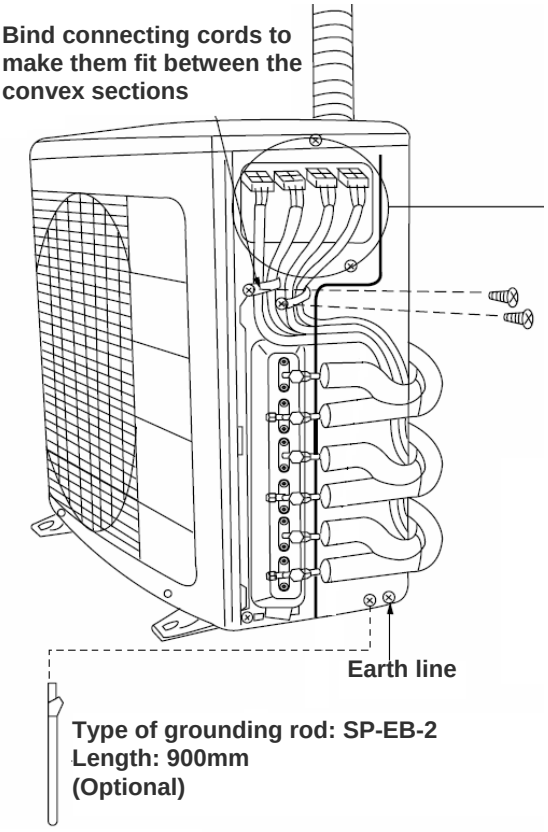

(Earth wire and grounding rod are not supplied. Please use optional items)

CAUTION:

– *Arrange the power cord so they do not touch the service valves*

- **Applicable models : RAM-36NP2A / 53NP2A**

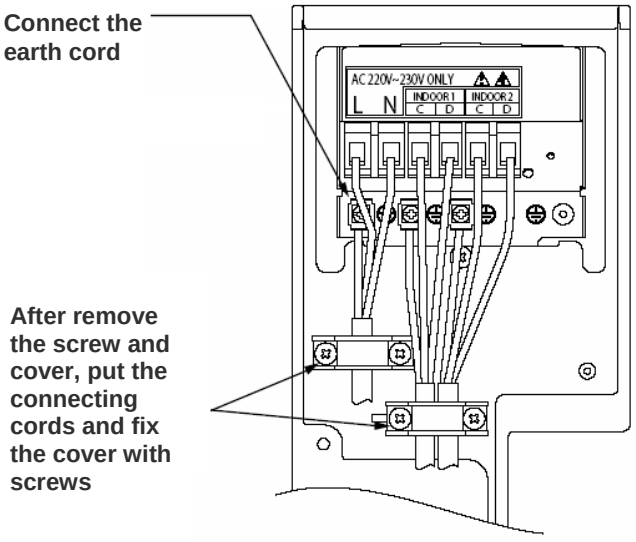

- **Applicable model: RAM-53NP3A / 68NP3A / 130NP6A**

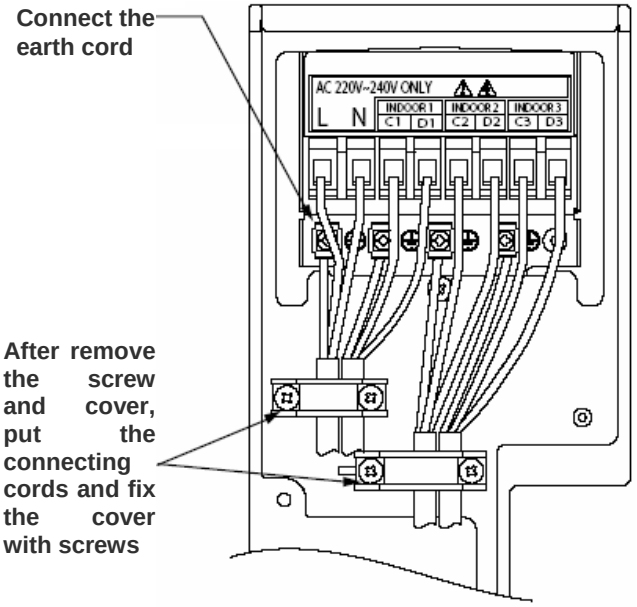

- **Applicable model : RAM-70NP4A**

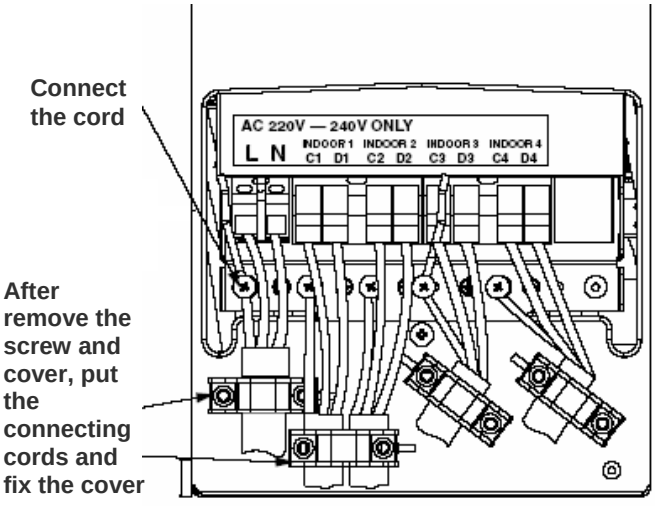

- **Applicable model : RAM-90NP5A**

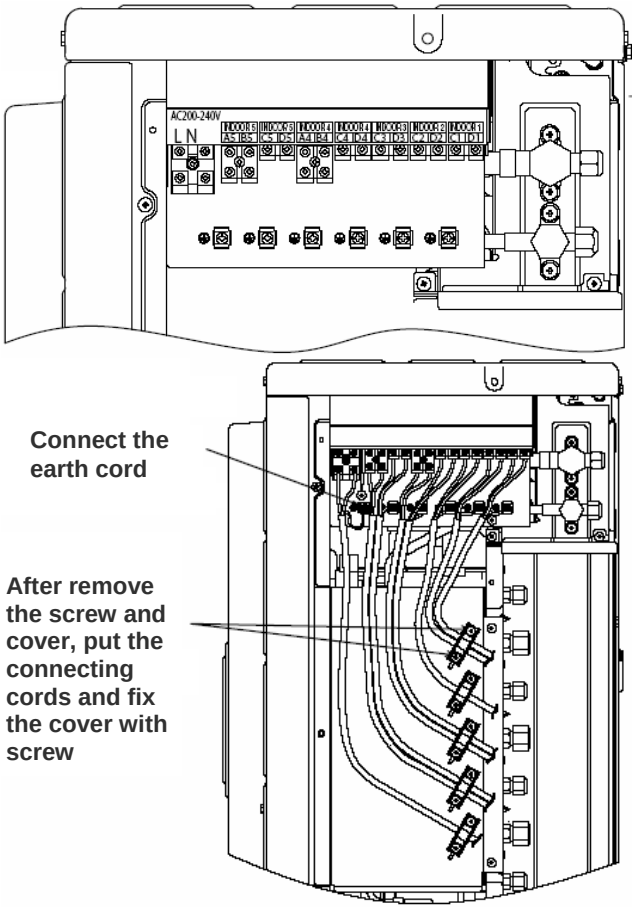

- **Applicable model : RAC-25NPA/RAC-35NPA/RAC-50NPA**

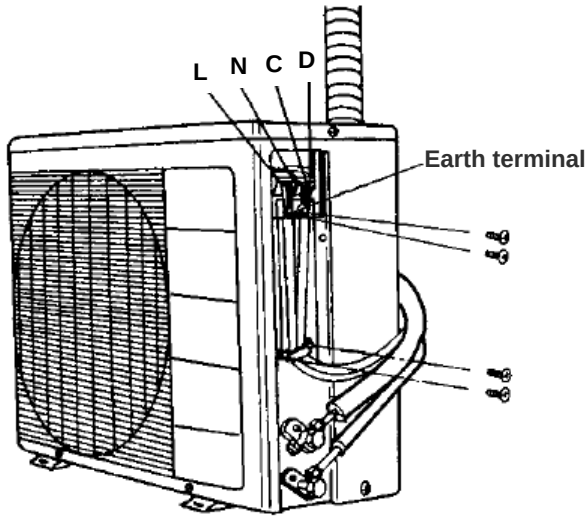

– Investigate the power supply capacity and other electrical conditions at the installation location.

– *Depending on the model of room air conditioner to be installed, requiest the customer to make arrangements for the necessary electrical work etc*

– *The electrical work includes the wiring work up to the outlet. In localities where electrical conditions are poor, use of a voltage regulation is recommended*

13.2.3 ELECTRICAL WIRING FOR WALL TYPE INDOOR UNIT

WARNING:

– *The appliance must be earthed*

– Remove the front panel and electrical cover to expose the electrical box in the indoor unit.

– Insert the connecting cord from the bottom of the unit.

– Fixed the wire firmly to the terminal.

- **Applicable Models : RAK-18QXA/RAK-25QXA/RAK-35QXA/RAK-50QXA**

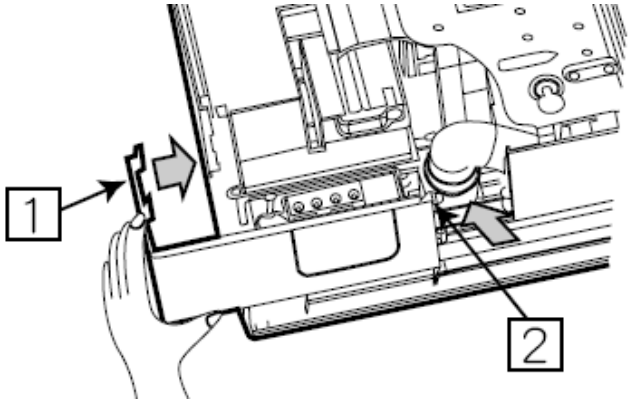

Pull the cover ① and ②in the directions as shown by arrows to remove the cover.

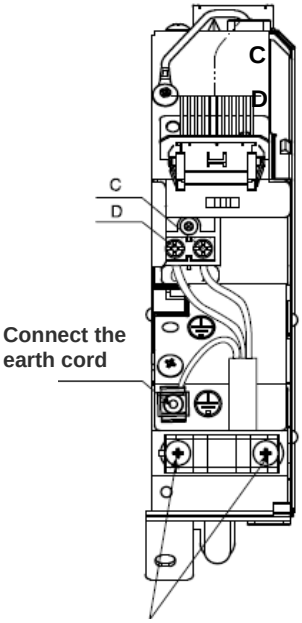

After remove the screw and cover, and put the connecting cords and fix the cover with screw

- **Applicable Models :**

RAK-18QPA/RAK-25QPA/RAK-35QPA/RAK-50QPA

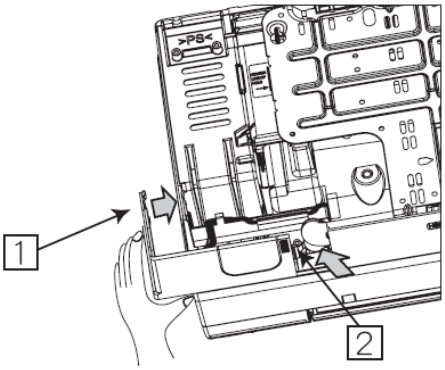

Pull the cover ① and ②in the directions as shown by arrows to remove the cover.

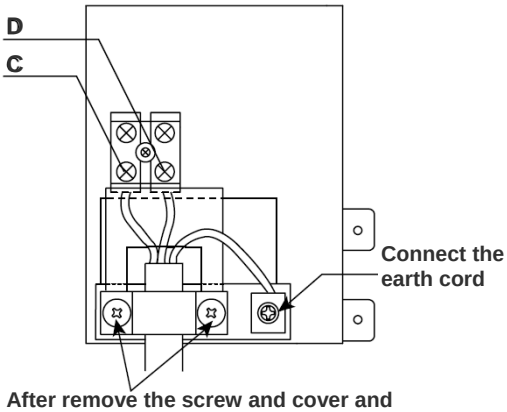

13.2.4 ELECTRICAL WIRING FOR FLOOR TYPE INDOOR UNIT

WARNING:

– *The appliance must be earthed*

– *Remove the cover of the electric box.*

– *Connect the connecting cords*

– *Assemble the cover of electric box*

- **Applicable Models :**

RAF-25QXA/RAF-35QXA/RAF-50QXA

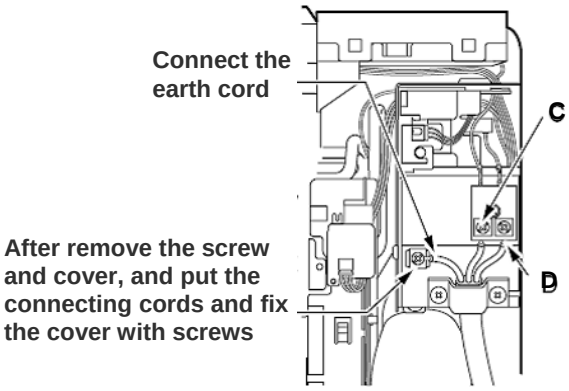

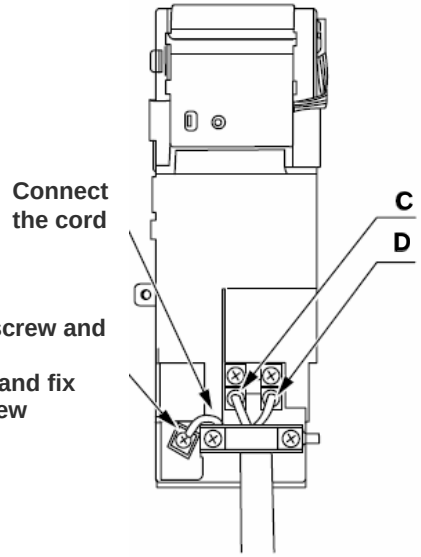

WARNING:

– *Leave some space in the connecting cord for maintenance purpose and be sure to secure it with the cord band.*

– *Secure the connecting cord along the coated part of the wire using the cord band. Do not exert pressure on the wire as this may cause overheating of fire*

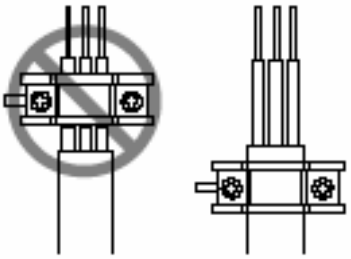

Connection of connecting cord

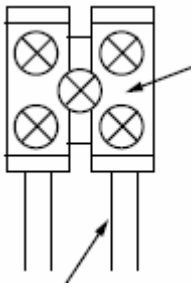

Securely screw in the connecting cord so that it will not get loose or disconnect.
Tightening torque reference value: 1.2 ~ 1.6Nm (12~16kgf.cm)
Excessive tightening may damage the interior of the cord requiring replacement

Connecting cord

13.2.5 ELECTRICAL WIRING FOR 4 WAY CEILING CASSETTE TYPE INDOOR UNIT (RAI-25RPA/RAI-35RPA/RAI-50RPA)

WARNING:

– *The appliance must be earthed*

– *Remove the cover of the electric box.*

– *Connect the connecting cords*

– *Assemble the cover of electric box*

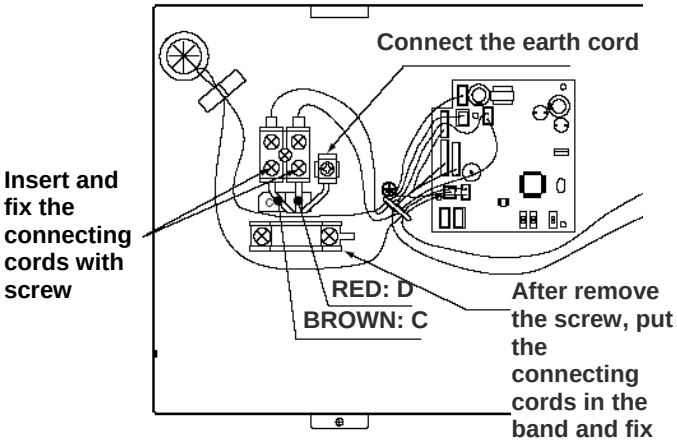

13.2.6 ELECTRICAL WIRING FOR DUCT TYPE INDOOR UNIT (RAD-18RPA/RAD-25RPA/RAD-35RPA/RAD-50RPA/RAD-50PPA/RAD-60PPA/RAD-70PPA)

WARNING:

– *The appliance must be earthed*

– *Remove the cover of the electric box.*

– *Connect the connecting cords*

– *Assemble the cover of electric box*

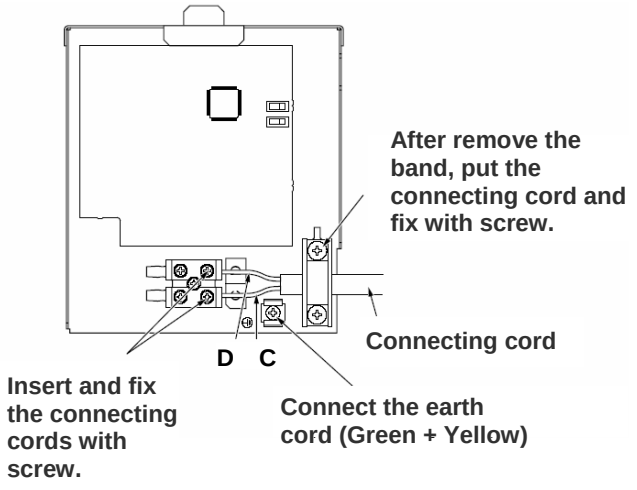

13.3 ELECTRICAL WIRING FOR SINGLE INVERTER UNIT

WARNING:

– *The appliance must be earthed*

– *Power supply shall be connected at the rated voltage; otherwise the unit will be broken or could not reach the specified capacity.*

13.3.1 PROCEDURES OF WIRING

- **Applicable models**

RAK-18PSA/RAC-18WSA **RAK-18PSAN/RAC-18WSAN**
RAK-25PSA/RAC-25WSA **RAK-25PSAN/RAC-25WSAN**
RAK-35PSA/RAC-35WSA **RAK-35PSAN/RAC-35WSAN**

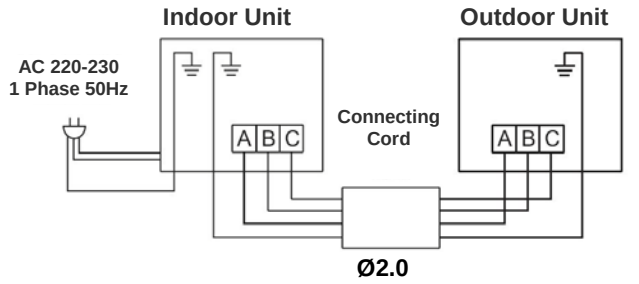

- **Applicable models** :

RAK-50PXA/RAC-50WXA
RAK-50PPA/RAC-50WPA

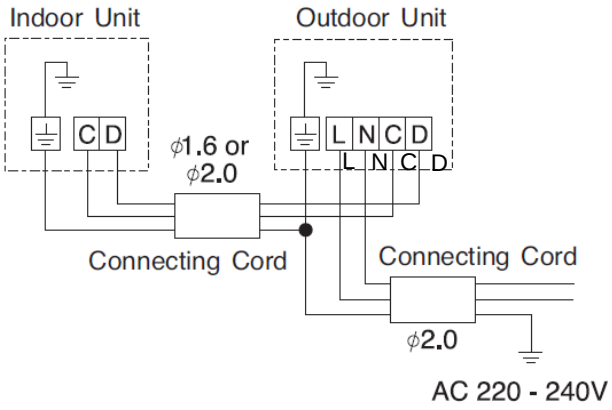

- **Applicable models**

RAF-25PXA/RAC-25FXA **RAK-25PPA/RAC-25WPA**
RAF-35PXA/RAC-35FXA **RAK-35PPA/RAC-35WPA**
RAF-50PXA/RAC-50FXA **RAK-18PEA/RAC-18WEA**
RAF-25RPA/RAC-25FPA **RAK-25PEA/RAC-25WEA**
RAF-35RPA/RAC-35FPA **RAK-35PEA/RAC-35WEA**
RAF-50RPA/RAC-50FPA **RAK-50PEA/RAC-50WEA**
RAK-25PXA/RAC-25WXA **RAK-18PSPA/RAC-18WSPA**
RAK-35PXA/RAC-35WXA **RAK-25PSPA/RAC-25WSPA**
RAK-18PPA/RAC-18WPA **RAK-35PSPA/RAC-35WSPA**

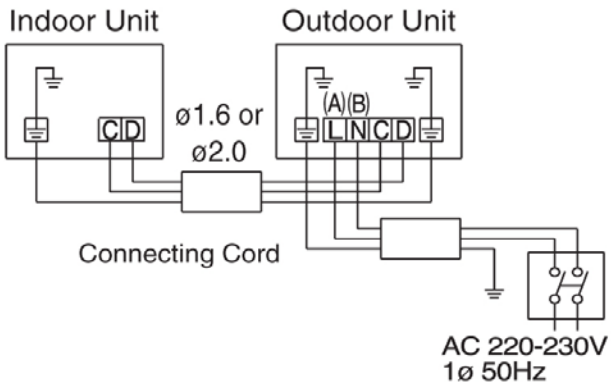

- **Applicable models :**

RAK-60PPA/RAC-60WPA **RAD-50PPA/RAC-50DPA**
RAK-70PPA/RAC-70WPA **RAD-60PPA/RAC-60DPA**
RAD-70PPA/RAC-70DPA

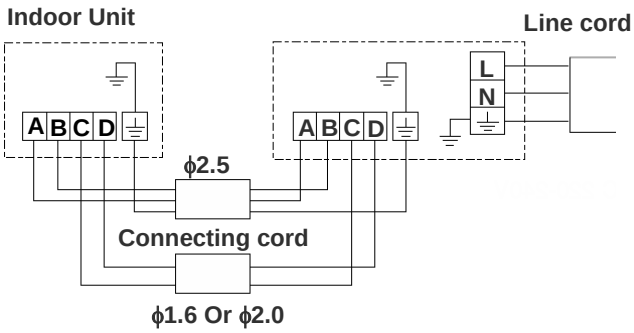

When removing the connecting wires for the indoor unit, please remove the low cover panel in front of the unit

WARNING:

– *The naked part of the wire core should be10 mm and fix them tightly to the terminal. Then try to pull the individual wire to check if the contact is tight. Improper insertion may cause the terminal to burn.*

– *Be sure to use only power cables approved from the authorities from your country. For example in Germany: Cable type : NYM 3x1.5mm^2*

– *Please refer to the installation manuals for wire connection to the terminals of the units. The cabling must meet the standards of electrical installation*

– *There is a AC voltage of 230V between the L and N terminals. Therefore, before servicing, be sure to remove the plug from the AC outlet or switch off the main switch.*

13.3.2 ELECTRICAL WIRING FOR INDOOR UNIT

WARNING:

– *The appliance must be earthed*

– Remove the front panel and electrical cover to expose the electrical box in the indoor unit.

– Insert the connecting cord from the bottom of the unit.

– Fix the wire firmly to the terminal.

- **Applicable models :**

RAK-18PSA/RAK-25PSA/RAK-35PSA

RAK-18PSAN/RAK-25PSAN/RAK-35PSAN

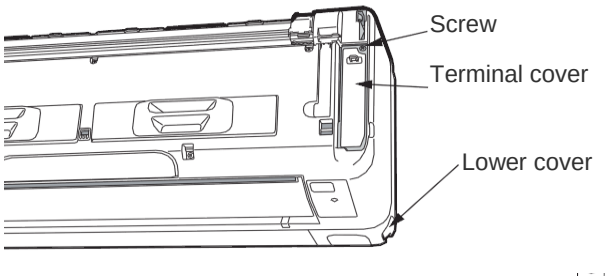

Remove the terminal cover and screw , hold the upper part when removing. Then remove the lower cover.

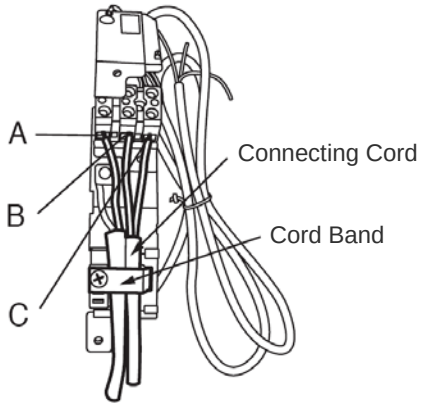

Connect the connecting cord with and fix with cord band

- **Applicable models :**

RAK-25PXA/RAK-35PXA/RAK-50PXA

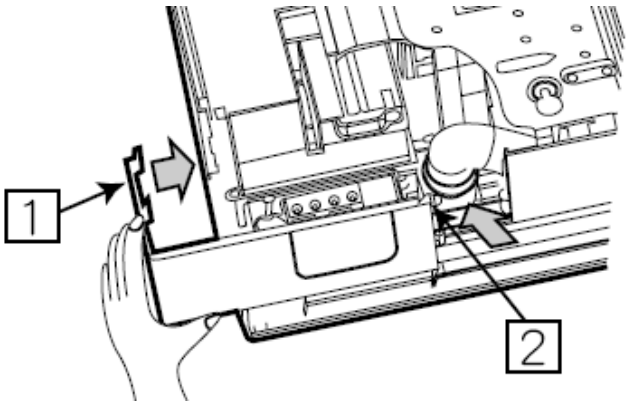

Pull the cover ① and ②in the directions as shown by arrows to remove the cover.

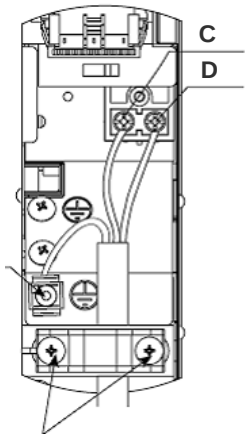

Connect the earth cord

After remove the screw and cover , and put the connecting cords and fix the cover with screw

- **Applicable Models :**

RAF-25PXA/RAF-35PXA/RAF-50PXA

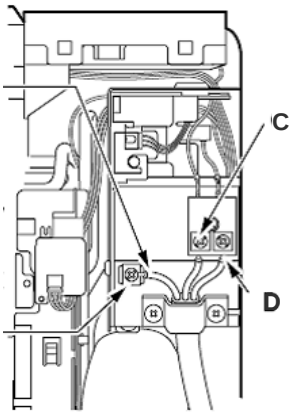

Connect the earth cord

After remove the screw and cover, and put the connecting cords and fix the cover with screws

WARNING:

– *Leave some space in the connecting cord for maintenance purpose and be sure to secure it with the cord band.*

– *Secure the connecting cord along the coated part of the wire using the cord band. Do not exert pressure on the wire as this may cause overheating of fire*

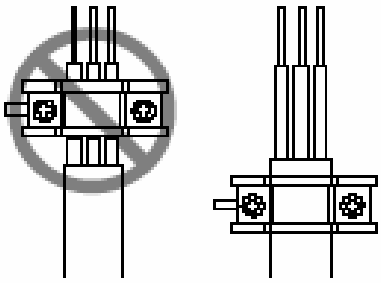

Connection of connecting cord

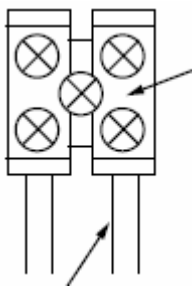

Securely screw in the connecting cord so that it will not get loose or disconnect.
Tightening torque reference value: 1.2 ~ 1.6Nm (12~16kgf.cm)
Excessive tightening may damage the interior of the cord requiring replacement

Connecting cord

- **Applicable models**

RAK-18PPA **RAK-18PEA** **RAK-18PSPA**
RAK-25PPA **RAK-25PEA** **RAK-25PSPA**
RAK-35PPA **RAK-35PEA** **RAK-35PSPA**
RAK-50PEA

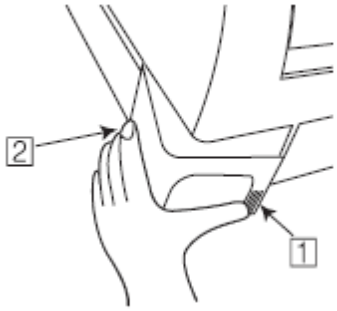

Pull the cover ① and ②in the directions as shown by arrows to remove the cover.

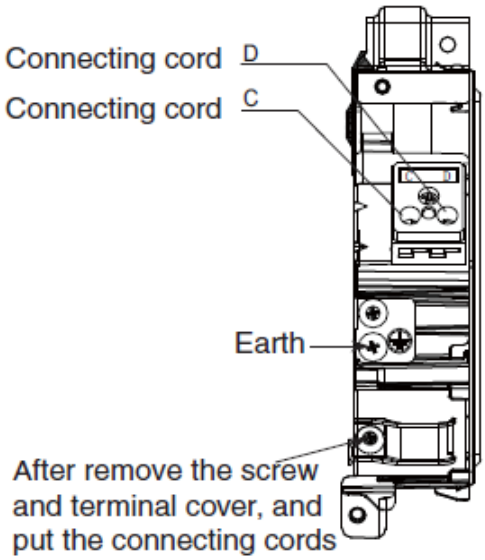

- **Applicable models**

RAK-50PPA

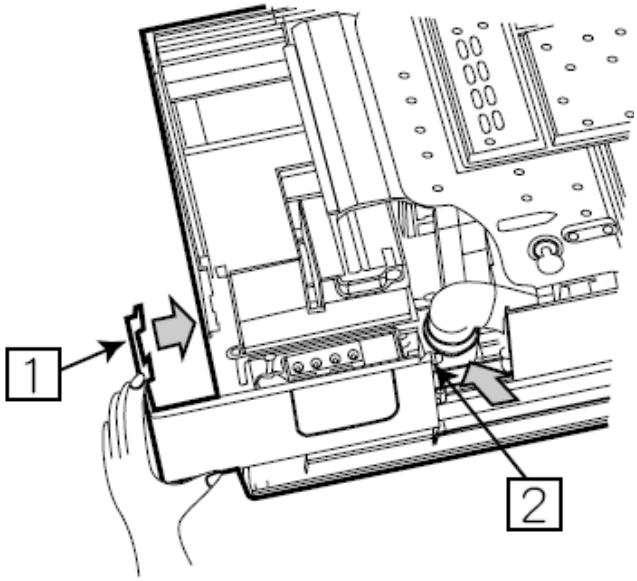

Pull the cover ① and ②in the directions as shown by arrows to remove the cover.

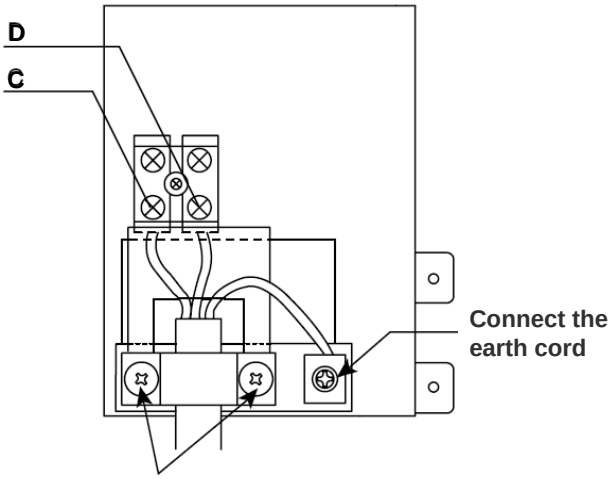

- **Applicable models :RAK-60PPA**

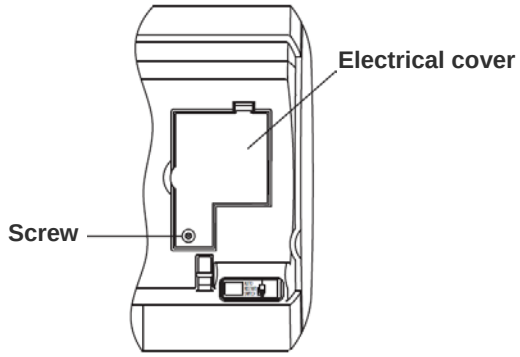

– Remove the screw and electrical cover
– Insert the connecting cord (A,B, C, D) from the bottom of unit
– Fixed the wire to terminal wires firmly as shown in the figure

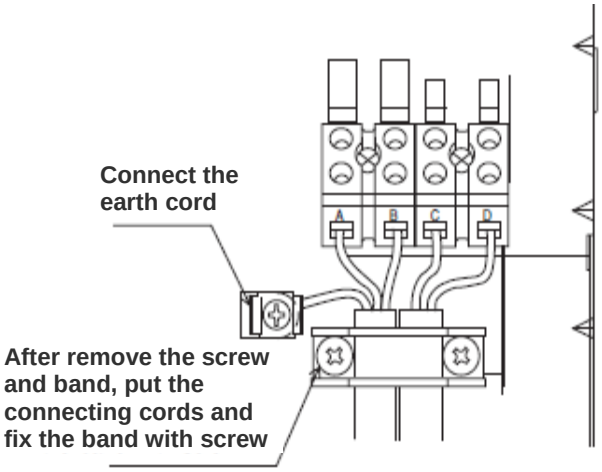

- **Applicable models : RAK-70PPA**

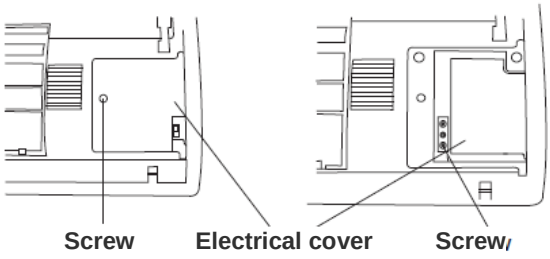

– Remove the screw and electrical cover
– Insert the connecting cord (A,B, C, D) from the bottom of unit
– Fixed the wire to terminal wires firmly as shown in the figure at right side.

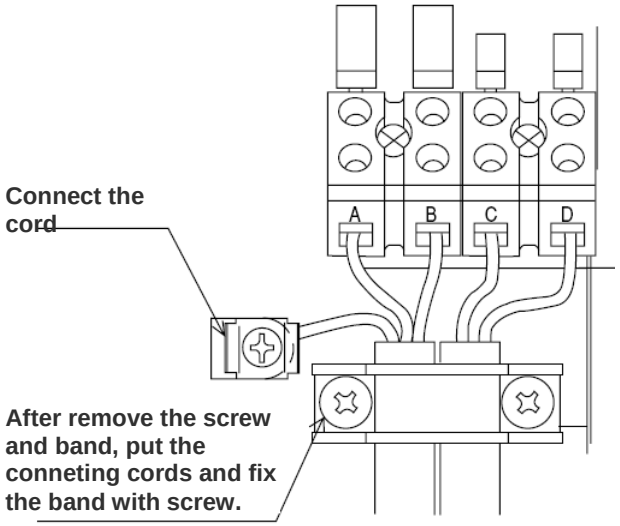

- **Applicable models :**

RAD-50PPA RAD-60PPA RAD-70PPA

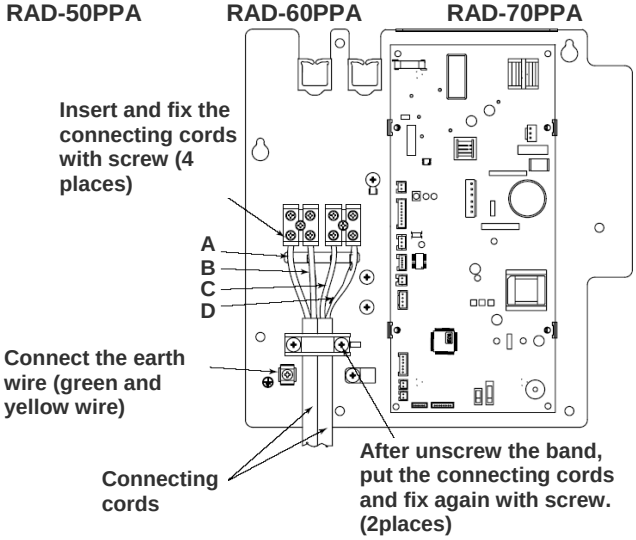

WARNING:

– *The appliance must be earthed*
– *Remove the cover of the electric box.*
– *Connect the connecting cords*
– *Assemble the cover of electric box*

13.3.3 ELECTRICAL WIRING FOR OUTDOOR UNIT

Please remove the side cover for wire connection

WARNING:

– *If you cannot attach the side cover due to the connecting cord, press the connecting cord in direction to the front panel to fix it..*
– *Be sure that the hooks of the side cover are fixed in certainly. Otherwise water leakage may occur and this causes short circuit of faults..*
– *The connecting cord should not touch the service valve or pipes. (It becomes high temperature during heating operation)*

Checking for electric source and the voltage range

- Before installation, the power source must be checked and the necessary wiring work must be completed. To ensure poper wiring capacity, refer to the list of wire gauges below for the lead-in from the pole transformer and for the wiring from a switch board of a fuse box to the main switch and outdoor unit in consideration o fthe locked rotor current.

- Investigate the power supply capacity and other electrical conditions at the installation location. Depending on the model of room air conditioner to be installed, request the customer to make arrangements for the necessary electrical work etc.
  The electrical work includes the wiring work up the outlet. In localities where electrical conditions are poor, use of a voltage regulation is recommended.
  Install outlet for the room air conditioner within the reach of the line cord.

IMPORTANT

	Wire cross section		
Cable length	RAC-18WPA	RAC-18WSA	RAC-60WPA
	RAC-25WPA	RAC-25WSA	RAC-70WPA
	RAC-35WPA	RAC-35WSA	RAC-50DPA
	RAC-50WPA	RAC-18WSAN	RAC-60DPA
	RAC-25WXA	RAC-25WSAN	RAC-70DPA
	RAC-35WXA	RAC-35WSAN	-
	RAC-50WXA	RAC-18WSPA	-
	RAC-25FXA	RAC-25WSPA	-
	RAC-35FXA	RAC-35WSPA	
	RAC-50FXA	RAC-18WEA	
	RAC-25FPA	RAC-25WEA	
	RAC-35FPA	RAC-35WEA	
	RAC-50FPA	RAC-50WEA	
Up to 6m	1.5 – 1.6mm^2		2.5mm^2
Up to 15m	2.5mm^2		2.5mm^2
Up to 25m	4.0 mm^2		4.0 mm^2

- **Applicable model : RAC-18WSA , RAC-25WSA , RAC-35WSA, RAC-18WSAN , RAC-25WSAN , RAC-35WSAN**

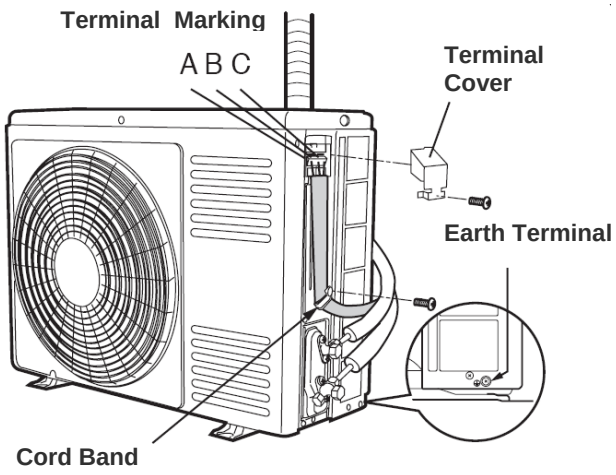

- **Applicable model : RAC-25WXA, RAC-35WXA, RAC-25FXA, RAC-35FXA, RAC-35WPA, RAC-35WEA, RAC-50WEA, RAC-25FPA, RAC-35FPA, RAC-50FPA**

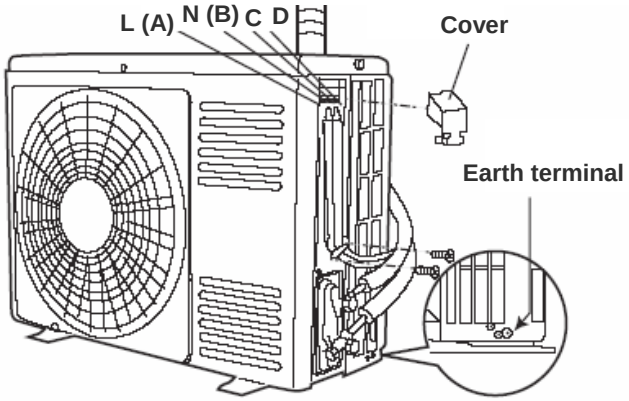

- **Applicable model : RAC-50WXA , RAC-50FXA**

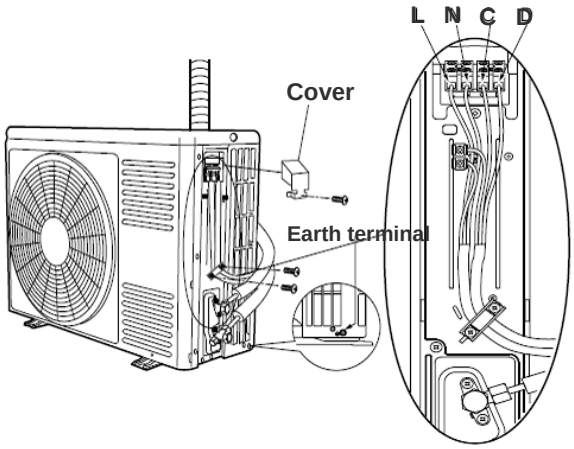

- **Applicabel model : RAC-18WPA, RAC-25WPA , RAC-18WEA, RAC-25WEA**

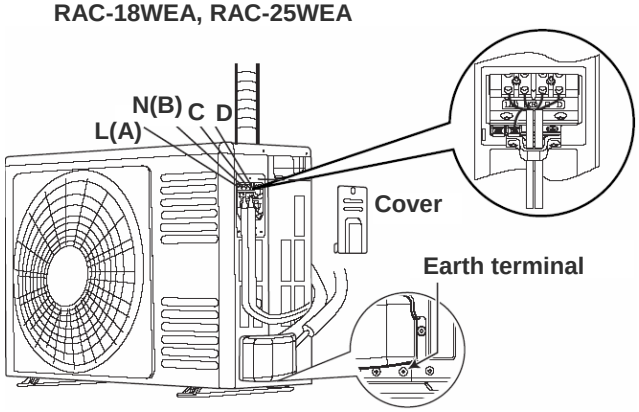

- **Applicable model: RAC-50WPA**

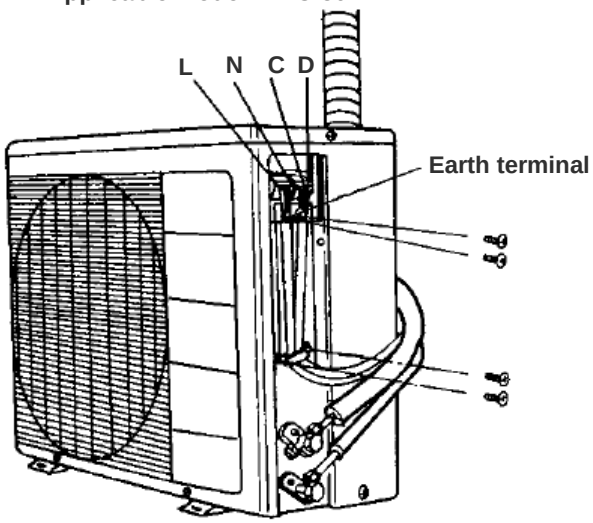

- **Applicable model: RAC-60WPA**

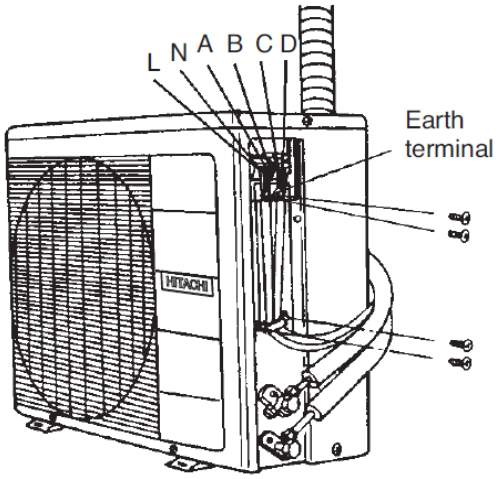

- **Applicable model: RAC-70WPA**

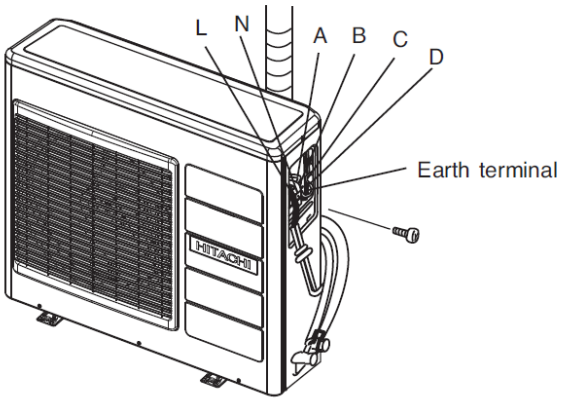

- **Applicable model : RAC-50DPA, RAC-60DPA, RAC-70DPA,**

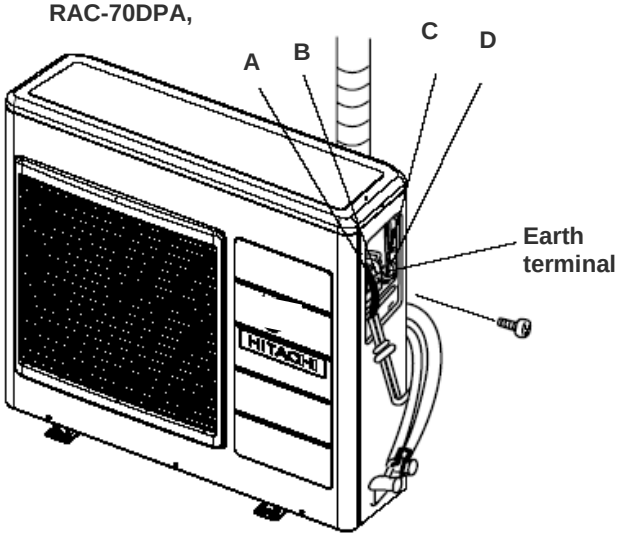

– Investigate the power supply capacity and other electrical conditions at the installation location.

– *Depending on the model of room air conditioner to be installed, requiest the customer to make arrangements for the necessary electrical work etc*

– *The electrical work includes the wiring work up to the outlet. In localities where electrical conditions are poor, use of a voltage regulation is recommended*

14 TROUBLESHOOTING

CONTENTS

14 TROUBLESHOOTING 14-1

14.1 PRECAUTIONS FOR TROUBLE SHOOTING 14-3

14.1.1 MONOZONE RAC-25NPA / 35NPA / 50NPA 14-3
14.1.2 MULTIZONE RAM-36NP2A 14-3
14.1.3 MULTIZONE/MONO SPLIT RAM-53NP2A / 53NP3A / 68NP3A / 70NP4A , MONO SPLIT RAF-50PXA/RAC-50FXA 14-4
14.1.4 MULTIZONE RAM-90NP5A 14-4
14.1.5 MULTIZONE RAM-130NP6A 14-5
14.1.6 MONO SPLIT RAK-18/25/35PSA / RAC-18/25/35WSA , RAK-18/25/35PSAN / RAC-18/25/35WSAN , RAK-18/25/35PSPA / RAC-18/25/35WSPA 14-5
14.1.7 MONO SPLIT RAK-18/25/35PPA / RAC-18/25/35WPA , RAK-18/25/35/50PEA / RAC-18/25/35/50WEA , RAF-25/35RPA / RAC-25/35FPA 14-6
14.1.8 MONO SPLIT RAK-50/60/70PPA / RAC-50/60/70WPA 14-6
14.1.9 MONO SPLIT RAF-50RPA / RAC-50FPA 14-7
14.1.10 MONO SPLIT RAF-25/35PXA / RAC-25/35FXA 14-7
14.1.11 MONO SPLIT RAD-50/60/70PPA / RAC-50/60/70DPA 14-8

14.2 DISCHARGE PROCEDURE AND POWER SHUT OFF METHOD FOR POWER CIRCUIT 14-9

14.2.1 MONOZONE RAC-25NPA / 35NPA / 50NPA & MULTIZONE RAM-36NP2A / 53NP2A / 53NP3A / 68NP3A / 70NP4A / 130NP6A & MONO SPLIT RAF-50PXA / RAC-50FXA, RAD-50/60/70PPA / RAC-50/60/70DPA 14-9
14.2.2 MULTIZONE RAM-90NP5A 14-9
14.2.3 MONO SPLIT RAK-18/25/35PSA / RAC-18/25/35WSA, RAK-18/25/35PSAN / RAC-18/25/35WSAN , RAK-18/25/35PSPA / RAC-18/25/35WSPA 14-10
14.2.4 MONO SPLIT RAK-18/25/35PPA / RAC-18/25/35WPA, RAK-18/25/35/50PEA / RAC-18/25/35/50WEA , RAF-25/35PXA / RAC-25/35FXA RAF-50RPA / RAC-50FPA 14-10
14.2.5 MONO SPLIT RAK-50/60/70PPA / RAC-50/60/70WPA 14-11
14.2.6 MONO SPLIT RAF-25/35RPA / RAC-25/35FPA 14-11

14.3 PRELIMINARY CHECK ON INDOOR/OUTDOOR UNIT ELECTRICAL PARTS AND REFRIGERATING 14-12

14.3.1 Support Function of Failure Diagnosis 14-13

14.4 CHECKING THE INDOOR UNIT ELECTRICAL PARTS 14-14

14.4.1 No power is detected (no operation) 14-14
14.4.2 Indoor fan does not operate (others are normal) – RAK-25/35/50PXA, RAK-18/25/35/50/70PPA, RAK-18/25/35/50PEA, RAF-25/35/50RPA, RAF-25/35/50PXA, RAD-50/60/70PPA 14-16
14.4.3 Air deflector does not move (others are normal) 14-16
14.4.4 Check the control P.W.B. (power circuit) – RAK-25/35PXA, RAK-18/25/35PPA, RAK-18/25/35/50PEA, RAF-25/35/50RPA, RAF-25/35PXA 14-16
14.4.5 Checking the remote controller 14-17
14.4.6 Outdoor unit does not operate (but receives remote infrared signal) 14-17
14.4.7 All systems stop from several seconds to several minutes after operation is started (all indicators are also off) 14-18

14.5 CHECKING OUTDOOR UNIT ELECTRICAL PARTS 14-19

14.5.1 No operation or abnormal operation (RAC-18/25/35WPA, RAC-18/25/35/50WEA, RAC-25/35FPA, RAC-25/35FXA 14-19
14.5.2 No operation or abnormal operation (RAC-18/25/35WSA, RAC-25/35/50WXA, RAC-50/60/70WPA, RAC-50FPA, RAC-50FXA, RAC-50/60/70DPA 14-21

14.6 CHECKING BETWEEN GAS LEAKAGE AND COMPRESSOR FAULTY 14-24

14.6.1 Troubleshooting procedure (No operation, No heating or No cooling) 14-24

14.7 TROUBLESHOOTING WHEN INDOOR TIMER LAMP BLINKS 14-25

14.7.1 MONOZONE / MULTIZONE indoor 14-25
14.7.2 MONO SPLIT INDOOR (RAK-25/35PXA, RAK-18/25/35/50/60/70PPA, RAK-18/25/35/50PEA, RAF-25/35/50RPA) 14-26
14.7.3 MONO SPLIT INDOOR (RAK-18/25/35PSA, RAK-18/25/35PSAn, RAK-18/25/35PSPA) 14-27
14.7.4 MONO SPLIT INDOOR (RAK-50PXA) 14-28
14.7.5 MONO SPLIT INDOOR (RAF-25/35/50PXA) 14-29
14.7.6 MONO SPLIT INDOOR (RAD-50/60/70PPA) 14-30

14.8 TROUBLESHOOTING WHEN OUTDOOR LED LAMP BLINKS 14-31

14.8.1 MONOZONE RAC-25NPA / 35NPA / 50NPA 14-31

14.8.2 MULTIZONE 14-32
14.8.3 COMMUNICATION ERROR DIAGNOSIS MULTIZONE RAM- 53NP3A / 68NP3A / 70NP4A / 130NP6A 14-33
14.8.4 COMMUNICATION ERROR DIAGNOSIS MULTIZONE RAM-90NP5A 14-34
14.8.5 MONO SPLIT(RAC-18/25/35WPA, RAC-25/35WXA, RAC-25/35FXA) 14-34
14.8.6 MONO SPLIT (RAC-50WXA, RAC-50FXA 14-35
14.8.7 MONO SPLIT (RAC-50/60/70WPA, RAC-50/60/70DPA) 14-36
14.9 CHECKING POWER MODULE 14-38
14.9.1 RAC-25NPA, 35NPA, 50NPA & RAM-36NP2A, 53NP2A, 53NP3A, 68NP3A, 70NP4A, 130NP6A 14-38
14.9.2 RAM-90NP5A 14-38
14.9.3 RAC-18/25WPA, RAC-25/35/50WXA, RAC-25/35/50FXA 14-39
14.9.4 RAC-35WPA 14-39
14.9.5 RAC-50/60/70WPA, & RAC-50/60/70DPA 14-40
14.10 THERMISTOR 14-41
14.10.1 Name and role of each thermistor 14-41
14.10.2 Reference value for thermistor's resistance and temperature 14-41
14.10.3 Monozone Outdoor 14-42

14.1 PRECAUTIONS FOR TROUBLE SHOOTING

14.1.1 MONOZONE RAC-25NPA / 35NPA / 50NPA

⚠Warning	⚠Warning
Remember that voltage of 155-170V is applied to the 0V line on the P.W.B. or the like as shown in the diagram below	When using an oscilloscope, never ground it. Don't forget that high voltage as noted in the left figure may apply to the oscilloscope.
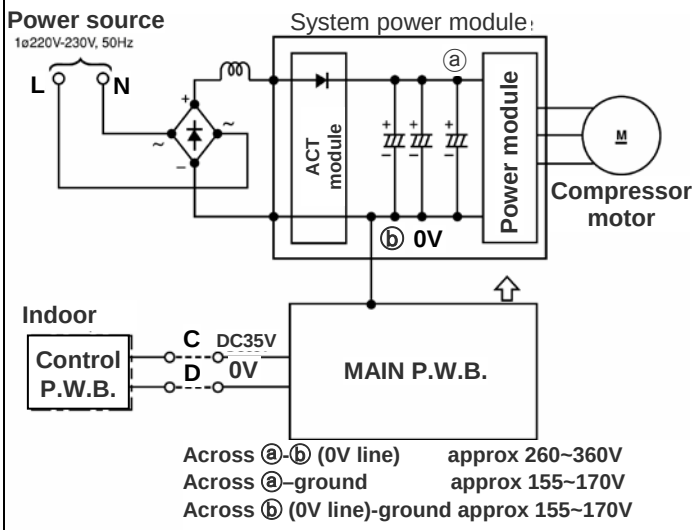	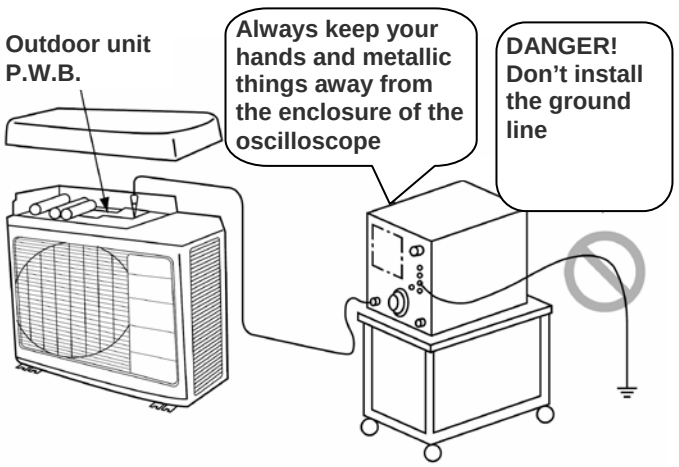

14.1.2 MULTIZONE RAM-36NP2A

⚠Warning	⚠Warning
Remember that voltage of 155-170V is applied to the 0V line on the P.W.B. or the like as shown in the diagram below	When using an oscilloscope, never ground it. Don't forget that high voltage as noted in the left figure may apply to the oscilloscope.
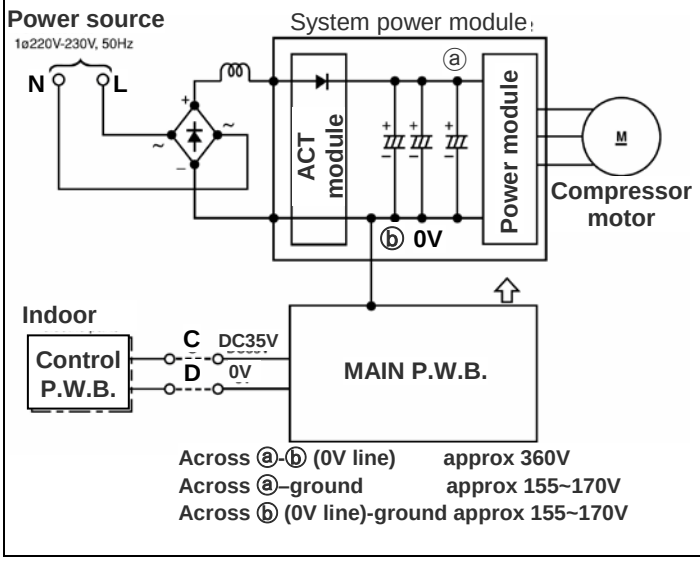	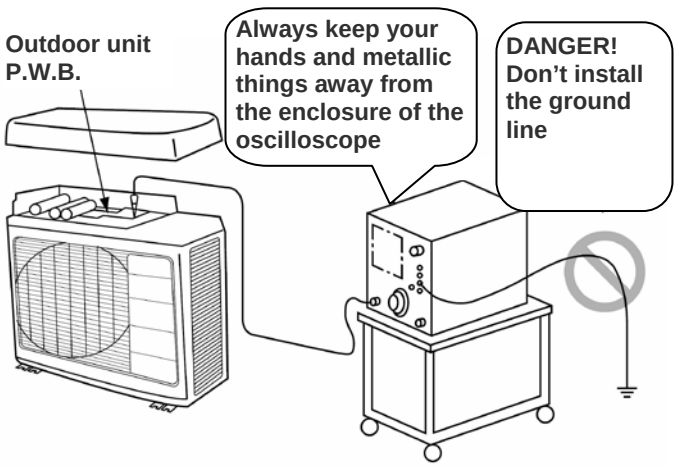

14.1.3 MULTIZONE/MONO SPLIT RAM-53NP2A / 53NP3A / 68NP3A / 70NP4A , MONO SPLIT RAF-50PXA/RAC-50FXA

⚠Warning	⚠Warning
Remember that voltage of 162V is applied to the 0V line on the P.W.B. or the like as shown in the diagram below	When using an oscilloscope, never ground it. Don't forget that high voltage as noted in the left figure may apply to the oscilloscope.

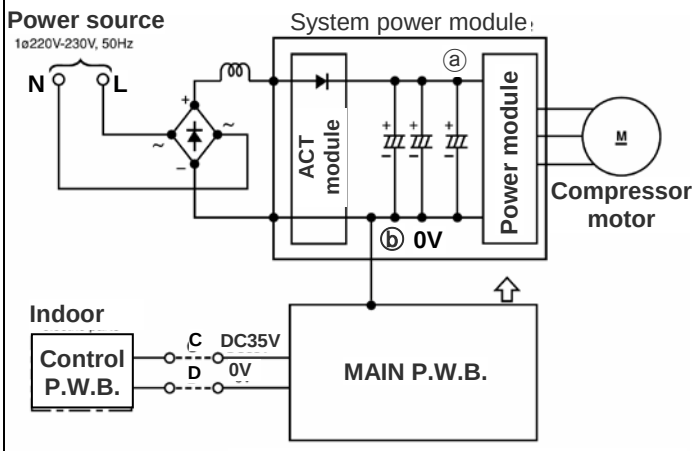

Across ⓐ-ⓑ (0V line) approx 360V
Across ⓐ–ground approx 155~170V
Across ⓑ (0V line)-ground approx 155~170V

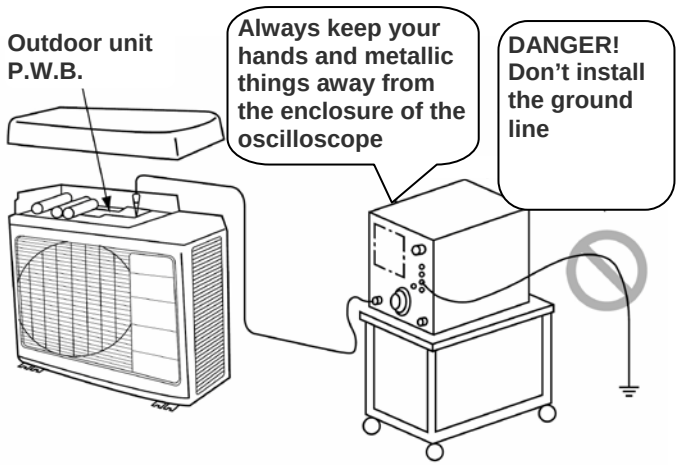

14.1.4 MULTIZONE RAM-90NP5A

⚠Warning	⚠Warning
Remember that the 0V line is biased at 162V in reference to the ground level. Also note that it takes about 10 minutes until the voltage fall after the power switch is turned OFF.	When using an oscilloscope, never ground it. Don't forget that high voltage as noted in the left figure may apply to the oscilloscope.

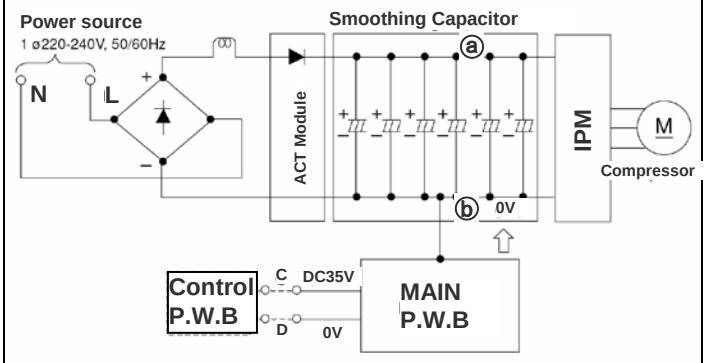

Across ⓐ–ⓑ (0V line) approx 260~360V
Across ⓐ–ground approx 155~170V
Across ⓑ (0V line)-ground approx 155~170V

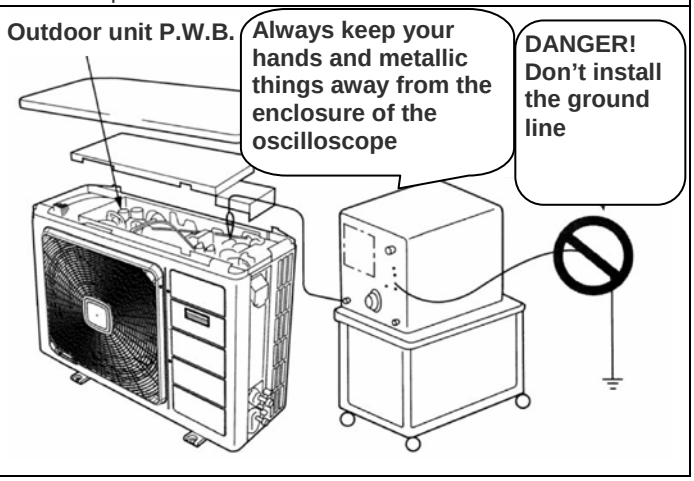

14.1.5 MULTIZONE RAM-130NP6A

⚠Warning	⚠Warning
Remember that the 0V line is biased at 162V in reference to the ground level. Also note that it takes about 10 minutes until the voltage fall after the power switch is turned OFF.	When using an oscilloscope, never ground it. Don't forget that high voltage as noted in the left figure may apply to the oscilloscope.

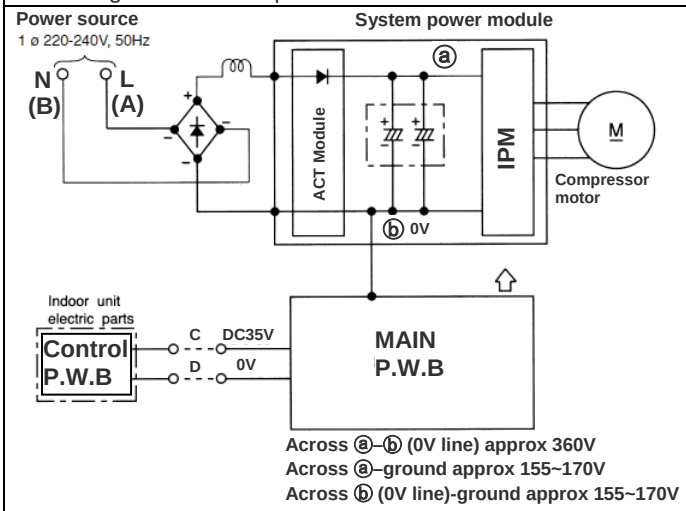

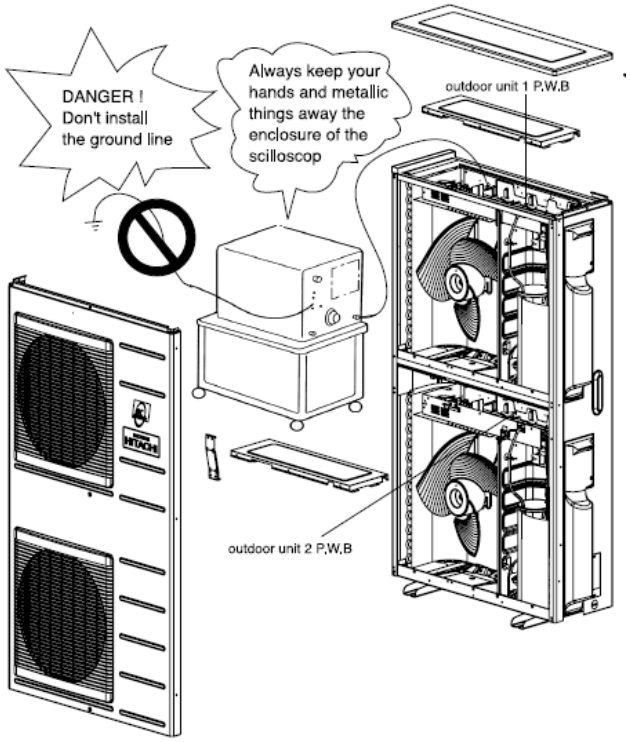

14.1.6 MONO SPLIT RAK-18/25/35PSA / RAC-18/25/35WSA , RAK-18/25/35PSAN / RAC-18/25/35WSAN , RAK-18/25/35PSPA / RAC-18/25/35WSPA

⚠Warning	⚠Warning
Remember that the 0V line on the outdoor electrical parts and the primary lower circuit of the indoor electrical parts have voltage to ground.	When using an oscilloscope, never ground it. Don't forget that high voltage as noted in the left figure may apply to the oscilloscope.

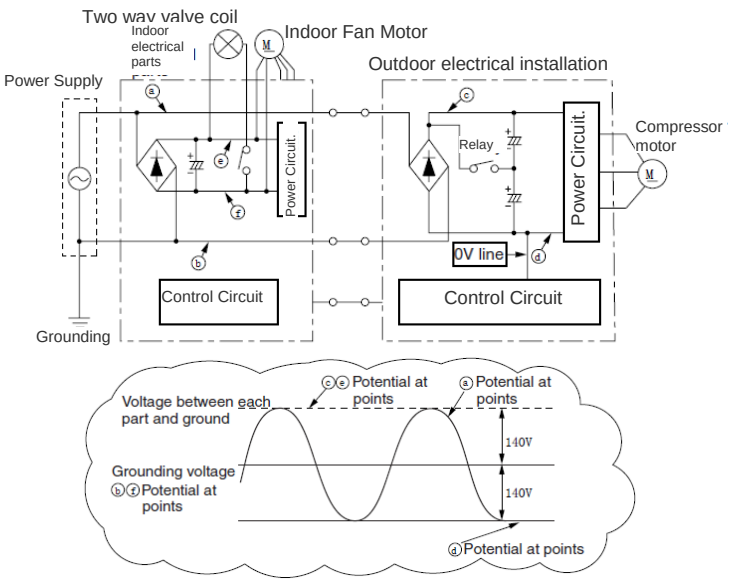

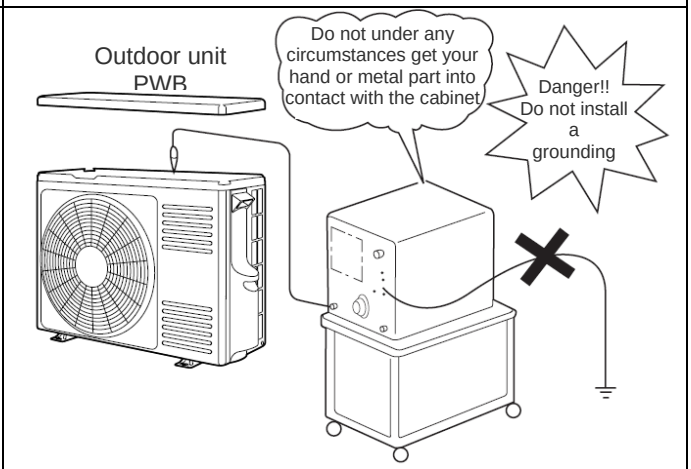

14.1.7 MONO SPLIT RAK-18/25/35PPA / RAC-18/25/35WPA , RAK-18/25/35/50PEA / RAC-18/25/35/50WEA , RAF-25/35RPA / RAC-25/35FPA

⚠Warning
Remember that voltage of 175V is applied to the 0V line on the P.W.B. or the like as shown in the diagram below

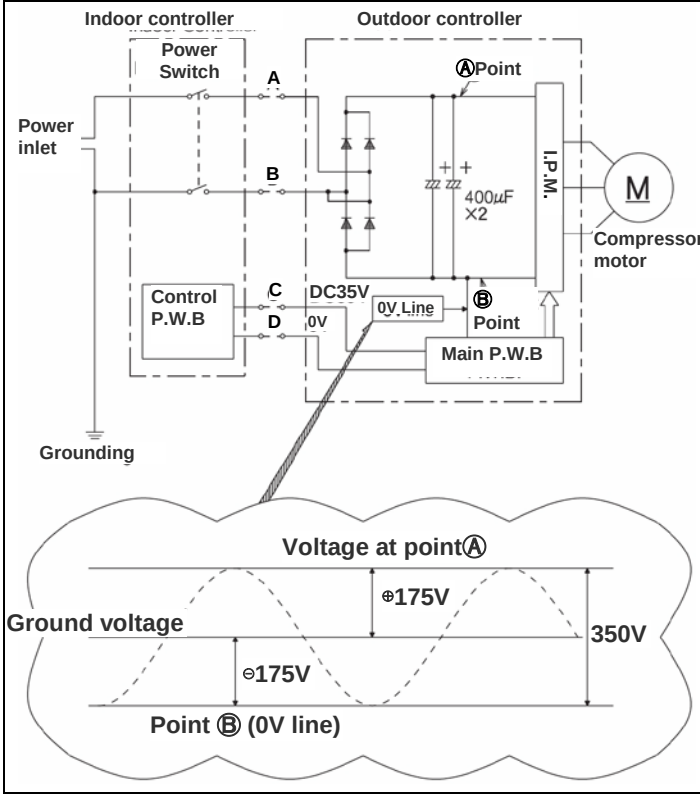

⚠Warning
When using an oscilloscope, never ground it. Don't forget that high voltage as noted in the left figure may apply to the oscilloscope.

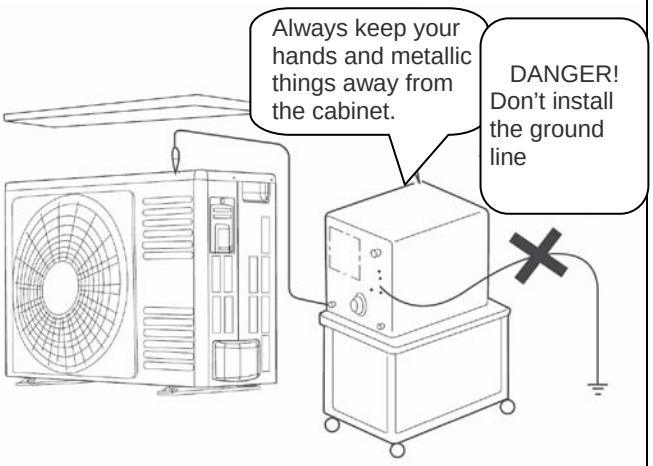

14.1.8 MONO SPLIT RAK-50/60/70PPA / RAC-50/60/70WPA

⚠Warning
Remember that voltage of 175V is applied to the 0V line on the P.W.B. or the like as shown in the diagram below

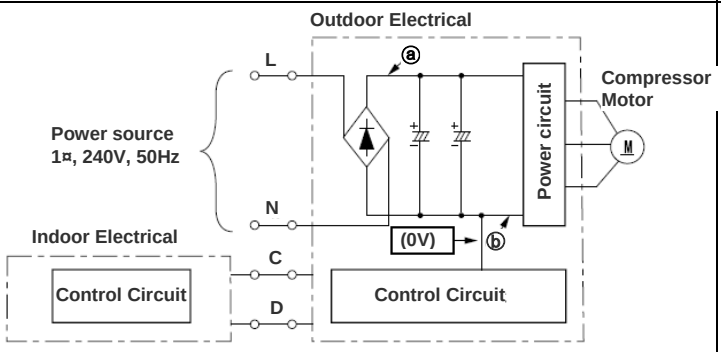

Across ⓐ-ⓑ (0V line) approx 320~360V
Across ⓐ-ground approx 155~170V
Across ⓑ (0V line)-ground approx 155~170V

⚠Warning
When using an oscilloscope, never ground it. Don't forget that high voltage as noted in the left figure may apply to the oscilloscope.

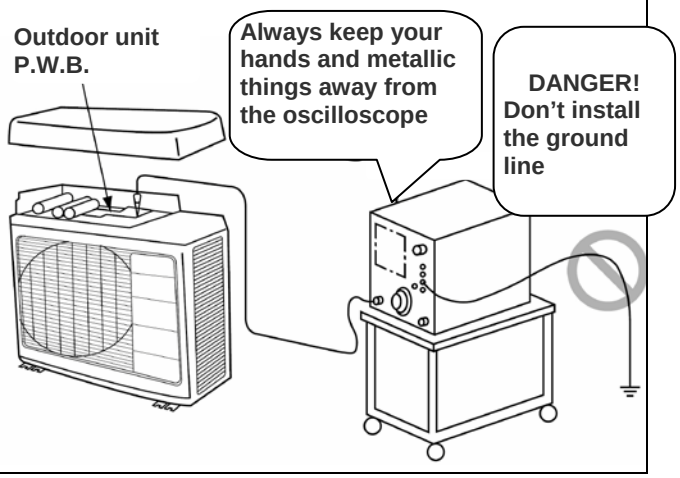

14.1.9 MONO SPLIT RAF-50RPA / RAC-50FPA

⚠Warning
Remember that the 0V line is biased to 320-360V in reference to the ground level.

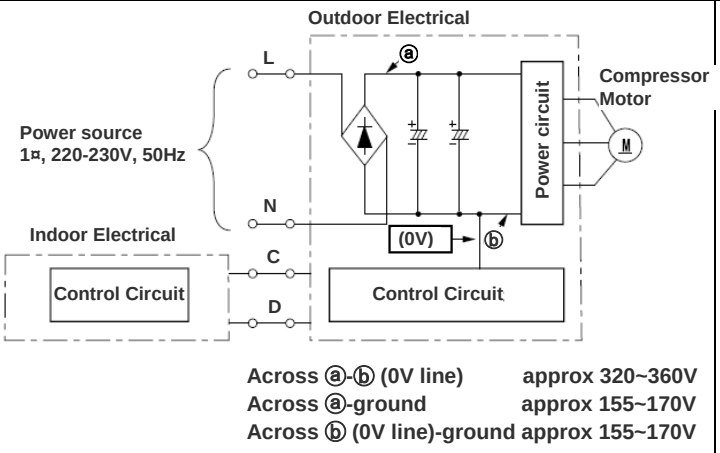

Across ⓐ-ⓑ (0V line) approx 320~360V
Across ⓐ-ground approx 155~170V
Across ⓑ (0V line)-ground approx 155~170V

⚠Warning
When using an oscilloscope, never ground it. Don't forget that high voltage as noted in the left figure may apply to the oscilloscope.

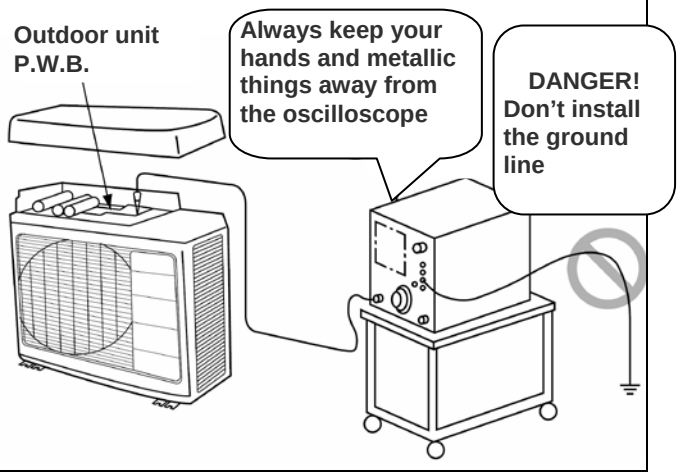

14.1.10 MONO SPLIT RAF-25/35PXA / RAC-25/35FXA

⚠Warning
Remember that voltage of 175V is applied to the 0V line on the P.W.B. or the like as shown in the diagram below

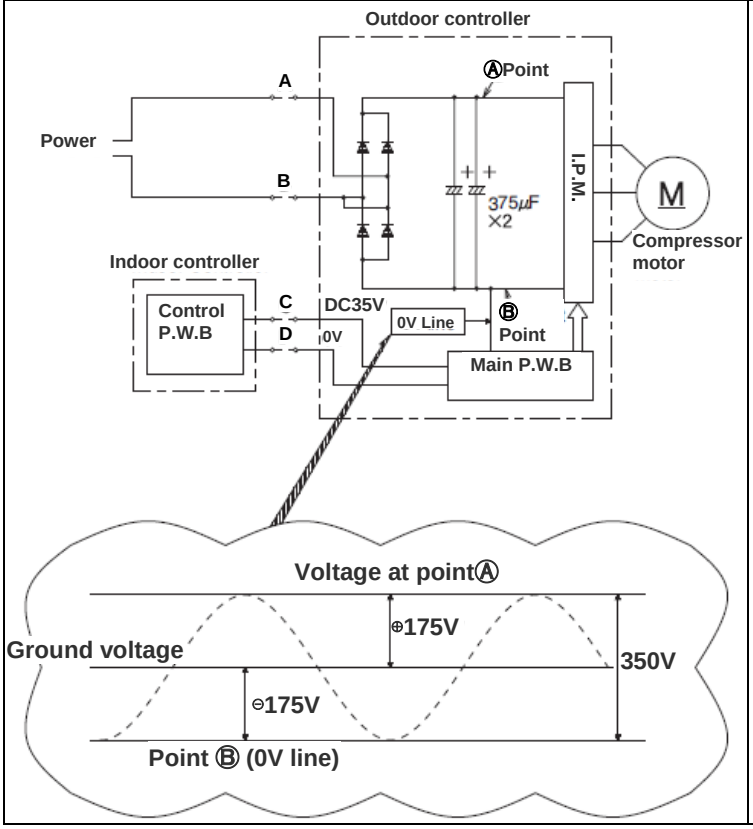

⚠Warning
When using an oscilloscope, never ground it. Don't forget that high voltage as noted in the left figure may apply to the oscilloscope.

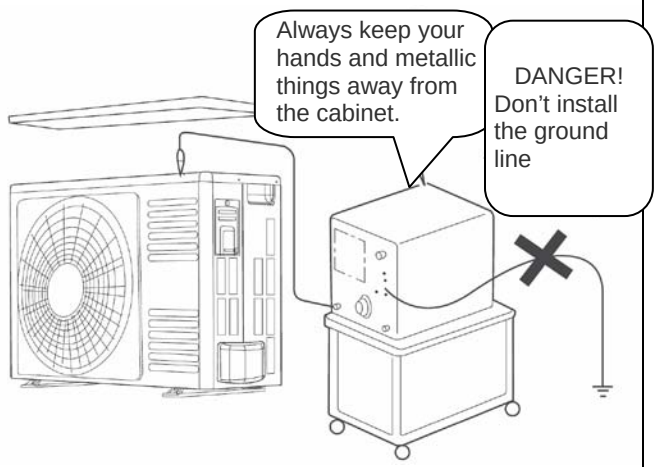

14.1.11 MONO SPLIT RAD-50/60/70PPA / RAC-50/60/70DPA

⚠Warning
Remember that voltage of 155-170V is applied to the 0V line on the P.W.B. or the like as shown in the diagram below

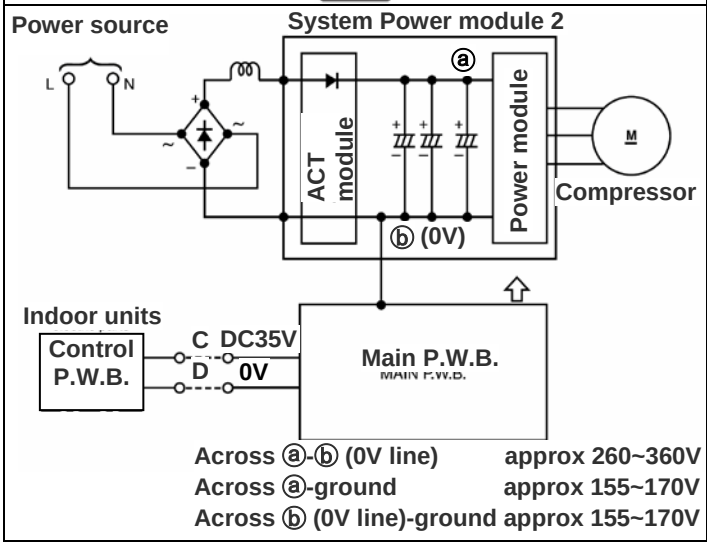

⚠Warning
When using an oscilloscope, never ground it. Don't forget that high voltage as noted in the left figure may apply to the oscilloscope.

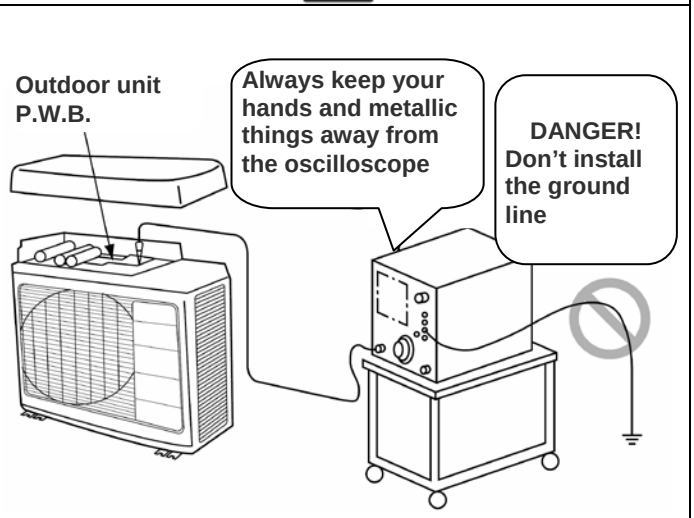

Other Cautions

1) Cautions concerning for short circuit in servicing.
   a) Use due caution to prevent short circuit in servicing. Short circuit wll immediately open the ICP.
   b) If the ICP is open, remove the causes and replace the ICP. If the remedy is improper, the ICP maybe blown again.

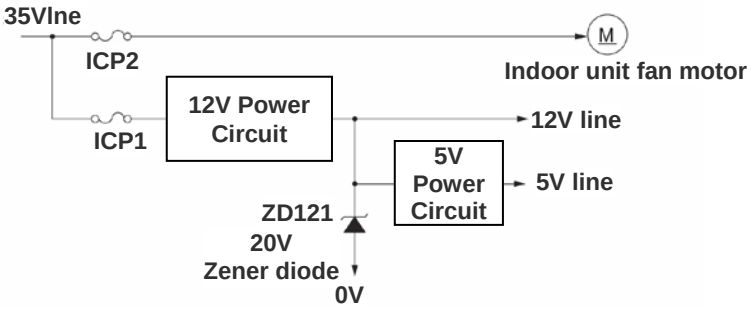

2) The CN3 (power supply) and CN10 (fan motor) are the connectors with lock mechanism. Press the lock with your fingers to unlock and remove the connector.

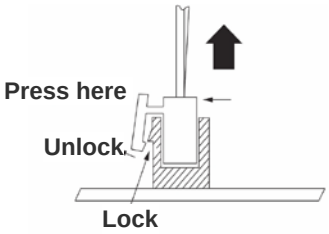

3) When checking the voltage and waveform, do not connect the probes to the forbidden areas shown below. Touching them may cause the ICP1 blowout and Q11 failure.

   The Q11 is a MOS-FET and its gate terminal is high impedance. When a probe such as multimeter is contacted with gate Ⓖ, the Q11 may have continuous ON state to supply overcurrent in the circuit causing the ICP1 blow out and Q111 failure.

   When checking the switching waveform of Q111, set the source Ⓢ to the base and measure the gate Ⓖ and drain Ⓓ.

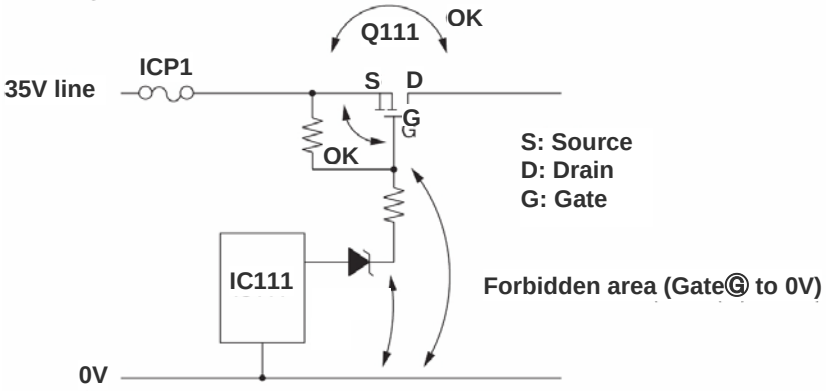

4) During power feeding to the P.W.B., do not remove and insert the CN10 (fan motor connector). Failure to do so may cause overcurrent to the fan motor and P.W.B.s (microcomputer, IC and the like) and a failure may occur. To remove or insert the CN10, be sure to shut off the power.

14.2 DISCHARGE PROCEDURE AND POWER SHUT OFF METHOD FOR POWER CIRCUIT

⚠**Warning**⚠
Caution

- Voltage of about 350V is charged between the terminals of smoothing capacitors.
- High voltage (DC360V) is also charged at terminals of ACT module and power module
- During continuity check for each circuit part of the outdoor unit, be sure to discharge the smoothing capacitors

14.2.1 MONOZONE RAC-25NPA / 35NPA / 50NPA & MULTIZONE RAM-36NP2A / 53NP2A / 53NP3A / 68NP3A / 70NP4A / 130NP6A & MONO SPLIT RAF-50PXA / RAC-50FXA, RAD-50/60/70PPA / RAC-50/60/70DPA

Disharge Procedure

1. Turn off the power supply to the outdoor unit.
2. After power is turned off, wait for 10 minutes or more. Then remove the electrical parts cover and apply soldering iron of 30 to 75W for 15 seconds or more to P1 and N1 terminals on system power module, in order to discharge voltage in smoothing capacitor
3. Remove receptacle of red/gray lead wire connected to system power module from diode stack before performing operation check of each circuit.

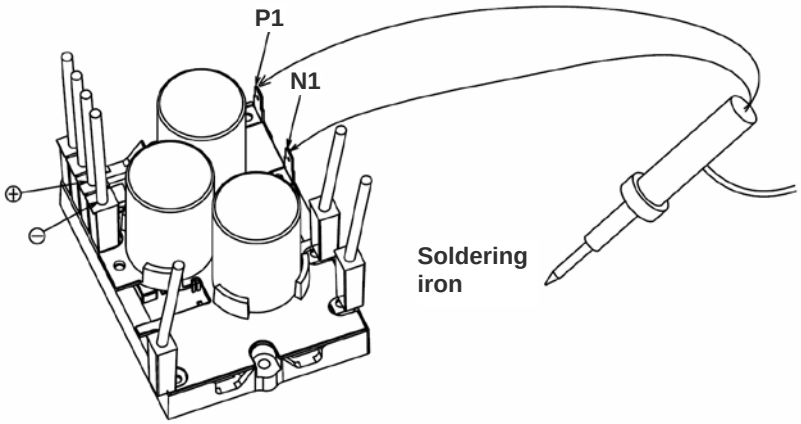

System Power module

As shown above, apply soldering iron to metal parts (receptacle) inside the sleeve corresponding to P1 and N1 terminals of system power module. Do this with smoothing capacitors kept connected. By removing red/gray lead wire from diode stack, power supply can be shut off (corresponding to (+) and (-).

Do no use a soldering iron with transformer: If one is used, thermal fuse inside transformer will be blown.

14.2.2 MULTIZONE RAM-90NP5A

Disharge Procedure

1. Turn off the power supply to the outdoor unit and disconnect the power plug.
2. Wait for 10 minutes or more after power is turned off and then remove electrical parts box lid as shown below. Apply soldering iron of 30~75W for 15 seconds or more at P1 and N1 black/white lead receptacles on Capa board to discharge voltage from smoothing capacitor. Do not loosen or remove screws of intelligent power module: If screw is loose, voltage will not be discharged.
3. Before operation check on each part of circuit, remove receptacle of red/gray lead connected to ACT module from diode stack.
4. As shown left, apply soldering iron to metal parts TAB 01 P and TAB 02 terminals of Capa board.

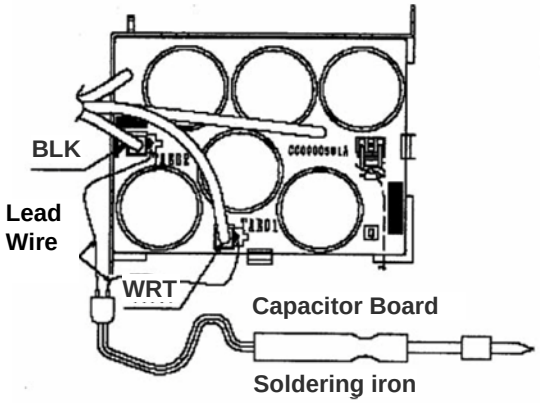

Do no use a soldering iron with transformer: If one is used, thermal fuse inside transformer will be blown.

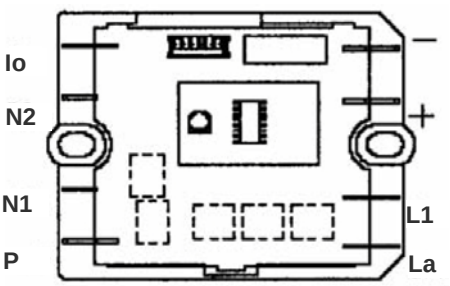

14.2.3 MONO SPLIT RAK-18/25/35PSA / RAC-18/25/35WSA, RAK-18/25/35PSAN / RAC-18/25/35WSAN , RAK-18/25/35PSPA / RAC-18/25/35WSPA

Disharge Procedure

1. Turn off the power of the indoor/outdoor unit and pull out the power supply plug.
2. After power is turned off, wait for 15 minutes or more. Then remove the electrical parts cover and apply soldering iron of 30 to 75W at the positive and negative terminals of IPM, and discharge the charge voltage of the smoothing capacitor.

Applicable models : RAK-18/25/35PSA / RAC-18/25/35WSA, RAK-18/25/35PSAN / RAC-18/25/35WSAN , RAK-18/25/35PSPA / RAC-18/25/35WSPA

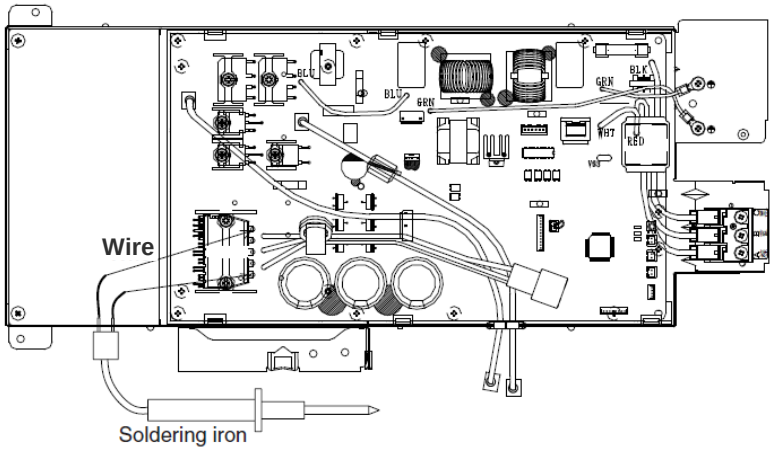

Do no use a soldering iron with transformer: If one is used, thermal fuse inside transformer will be blown.

14.2.4 MONO SPLIT RAK-18/25/35PPA / RAC-18/25/35WPA, RAK-18/25/35/50PEA / RAC-18/25/35/50WEA , RAF-25/35PXA / RAC-25/35FXA RAF-50RPA / RAC-50FPA

Disharge Procedure

1. Turn off the power of the indoor/outdoor unit and pull out the power supply plug.
2. After power is turned off, wait for 10 minutes or more. Then remove the electrical parts cover and apply soldering iron of 30 to 75W for 15 seconds or more to TAB05 and R001 terminals on the main P.W.B. as shown in the figure below. In order to discharge voltage in smoothing capacitor

- **Applicable models : RAK-18/25PPA / RAC-18/25WPA, RAK-18/25PEA / RAC-18/25WEA**

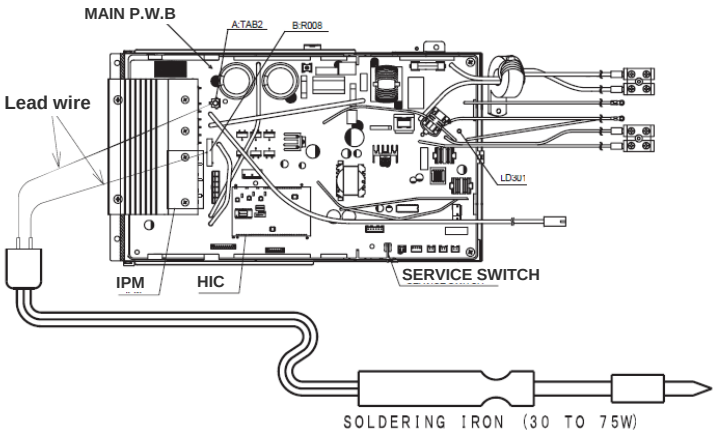

- **Applicable models : RAK-35PPA / RAC- 35WPA, RAK-35PEA / RAC- 35WEA, RAF-25/35PXA / RAC-25/35FXA**

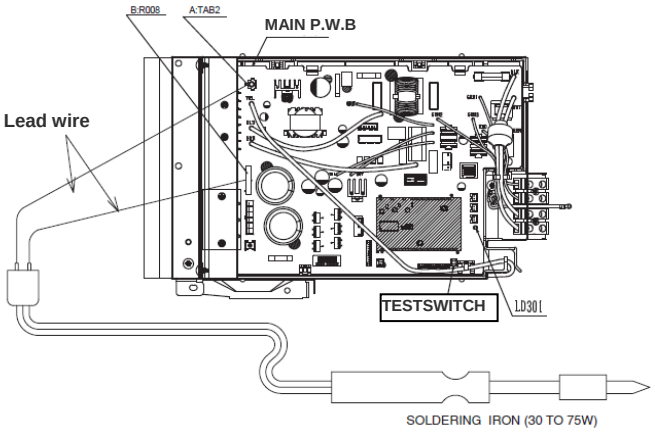

- **Applicable models : RAK-50PEA / RAC-50WEA , RAF-50RPA / RAC-50FPA**

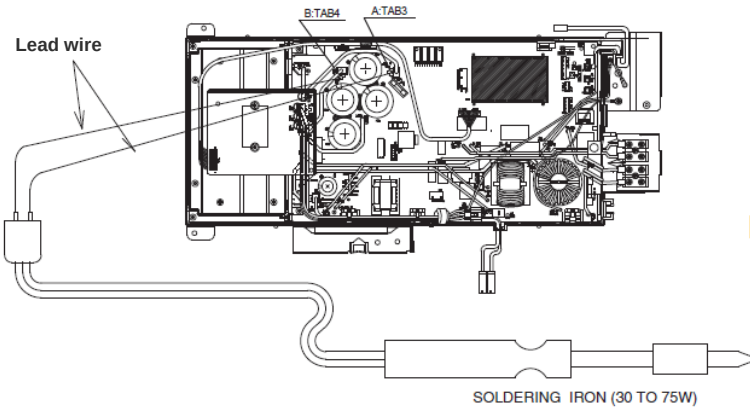

Do not use a soldering iron with transformer: Otherwise, thermal fuse inside transformer will be blown.

14.2.5 MONO SPLIT RAK-50/60/70PPA / RAC-50/60/70WPA

Disharge Procedure

1. Turn off the power supply to the outdoor unit.
2. After power is turned off, wait for 10 minutes or more. Then remove the electrical parts cover and apply soldering iron of 30 to 75W for 15 seconds or more to (+) and (-) terminals on system power module, in order to discharge voltage in smoothing capacitor

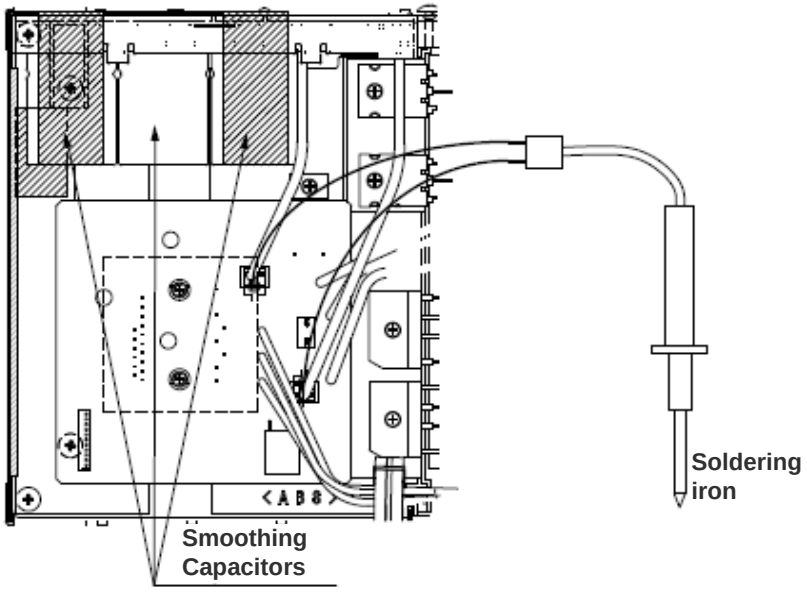

As shown beside, apply soldering iron to metal parts (receptacle) inside the sleeve corresponding to P1 and N1 terminals of system power module. Do this with smoothing capacitors kept connected. By removing red/gray lead wire from diode stack, power supply can be shut off (corresponding to (+) and (-).

Do no use a soldering iron with transformer: If one is used, thermal fuse inside transformer will be blown.

14.2.6 MONO SPLIT RAF-25/35RPA / RAC-25/35FPA

Disharge Procedure

1. Turn off the power of the indoor unit or pull out the power supply plug.
2. After power is turned off, wait for 10 minutes or more. Then remove the electrical parts cover and apply soldering iron of 30 to 75W for 15 seconds or more to TAB3 (GRAY) and TAB4 (RED) terminals on the main P.W.B, in order to discharge voltage in smoothing capacitor

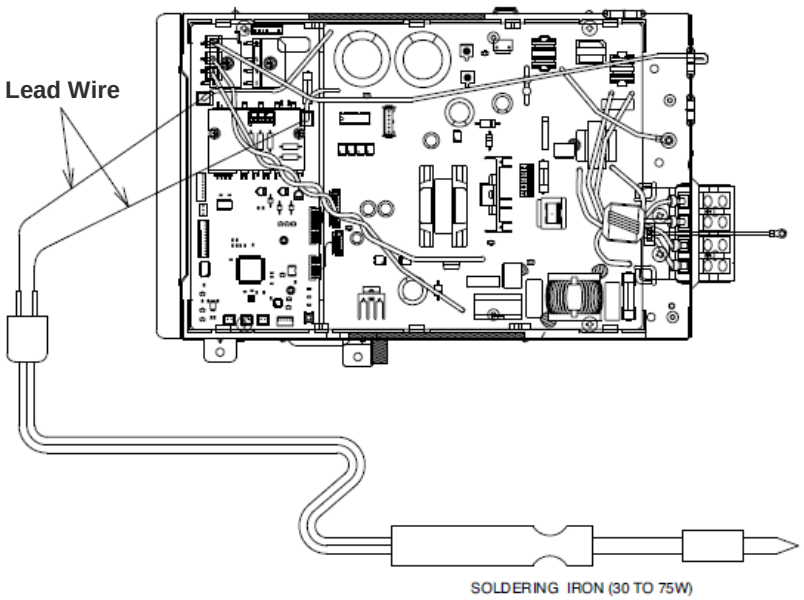

Do no use a soldering iron with transformer: If one is used, thermal fuse inside transformer will be blown.

14.3 PRELIMINARY CHECK ON INDOOR/OUTDOOR UNIT ELECTRICAL PARTS AND REFRIGERATING

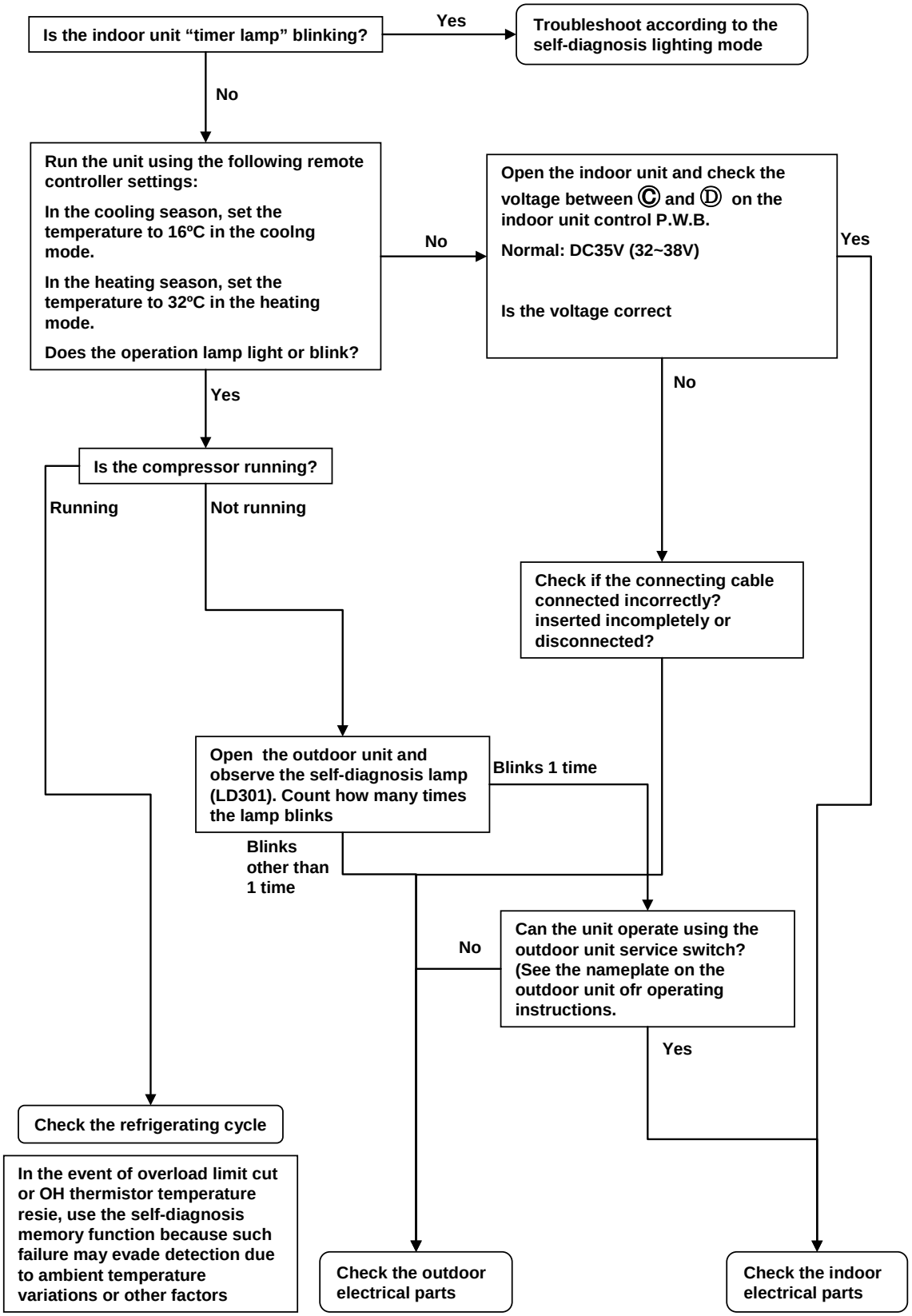

14.3.1 SUPPORT FUNCTION OF FAILURE DIAGNOSIS

No.	Function Name	Description
1	Self-diagnosis function <indicating a failure on the indoor unit>	• The “timer lamp indicates a mode of failure detected on the indoor or outdoor unit side by blinking frequency. • A failure detected on the outdoor unit side will be indicated by the “timer lamp” blinking 4 times after a retry operation has been performed several times. Note: In some failure modes, only the retry operation is repeated without lamp indication. <Failure modes that will repeat a retry operation without the indoor unit lamp indication are as follow :> OH thermistor temperature rise Outdoor unit communication error. Power voltage abnormal Less frequent defects.
	<Indicating a failure on the outdoor unit>	• The “LD301” indicates a mode of failure detected on the outdoor unit side by the blinking frequency. Upon failure detection, the outdoor unit will shut down and the LD301 continues to blink until the unit is reset. (In the event of communication errors, the LD301 continues to blink until communication is restored)

14.4 CHECKING THE INDOOR UNIT ELECTRICAL PARTS

14.4.1 NO POWER IS DETECTED (NO OPERATION)

14.4.1.1 MONO SPLIT

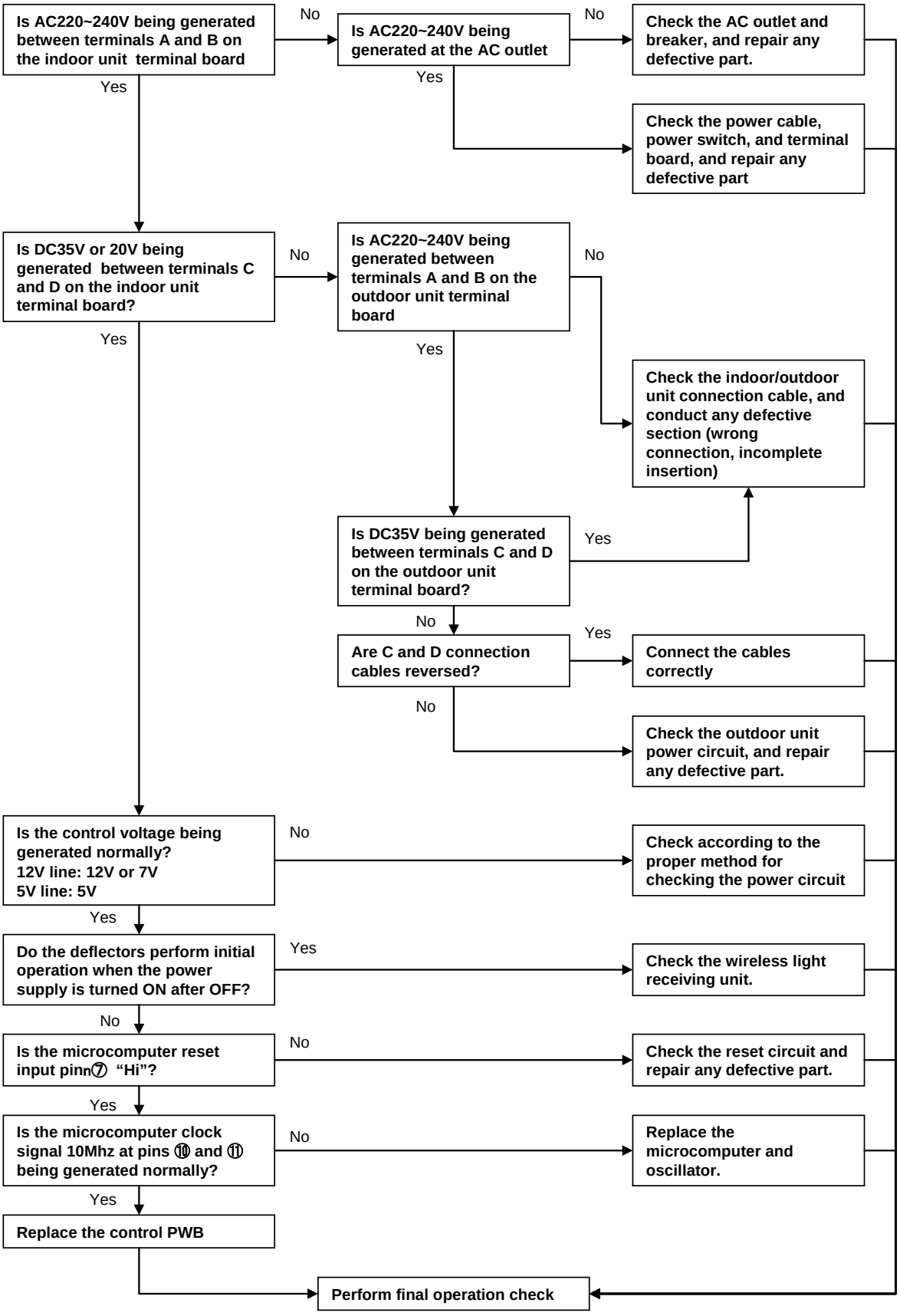

※1: When not in operation, the unit will enter into a low power standby state, possibly causing a voltage drop to the 12V and 35V lines as shown

25V~20V
12V~7V

14.4.1.2 MONOZONE / MULTIZONE / MONO SPLIT

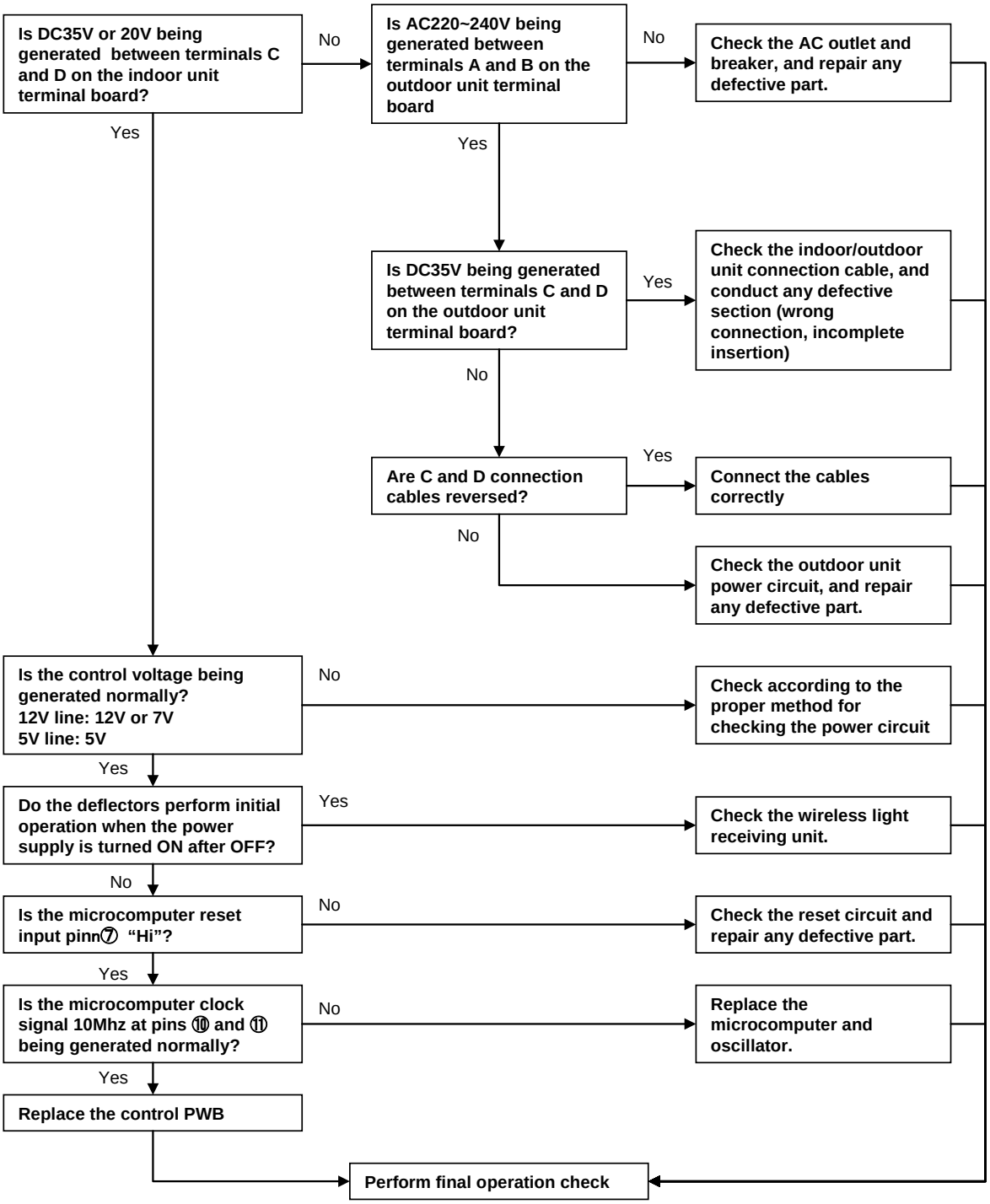

※1: When not in operation, the unit will enter into a low power standby state, possibly causing a voltage drop to the 12V and 35V lines as shown

25V~20V
12V~7V

14.4.2 INDOOR FAN DOES NOT OPERATE (OTHERS ARE NORMAL) – RAK-25/35/50PXA, RAK-18/25/35/50/70PPA, RAK-18/25/35/50PEA, RAF-25/35/50RPA, RAF-25/35/50PXA, RAD-50/60/70PPA

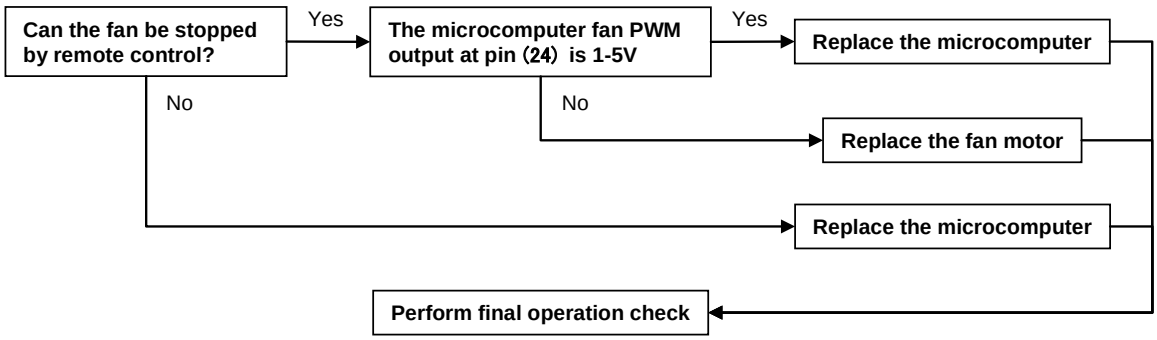

14.4.3 AIR DEFLECTOR DOES NOT MOVE (OTHERS ARE NORMAL)

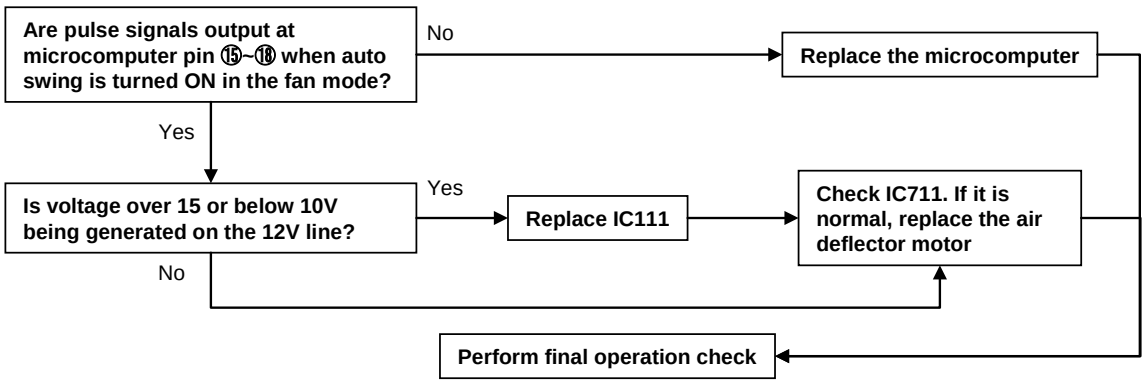

14.4.4 CHECK THE CONTROL P.W.B. (POWER CIRCUIT) – RAK-25/35PXA, RAK-18/25/35PPA, RAK-18/25/35/50PEA, RAF-25/35/50RPA, RAF-25/35PXA

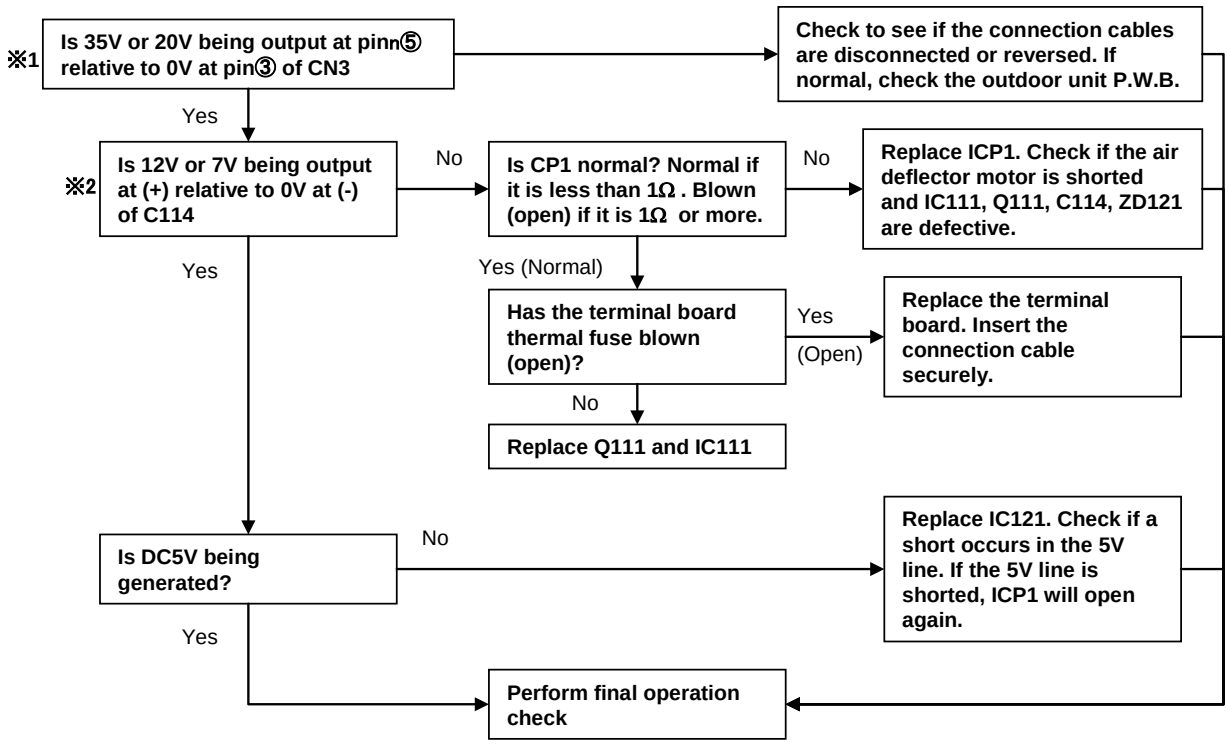

※**1**: When the unit is not in operation, the voltage across the 35V line may drop to 20V
※**2**: When the unit is not in operation, the voltage across the 12V line may drop to 7V

14.4.5 CHECKING THE REMOTE CONTROLLER

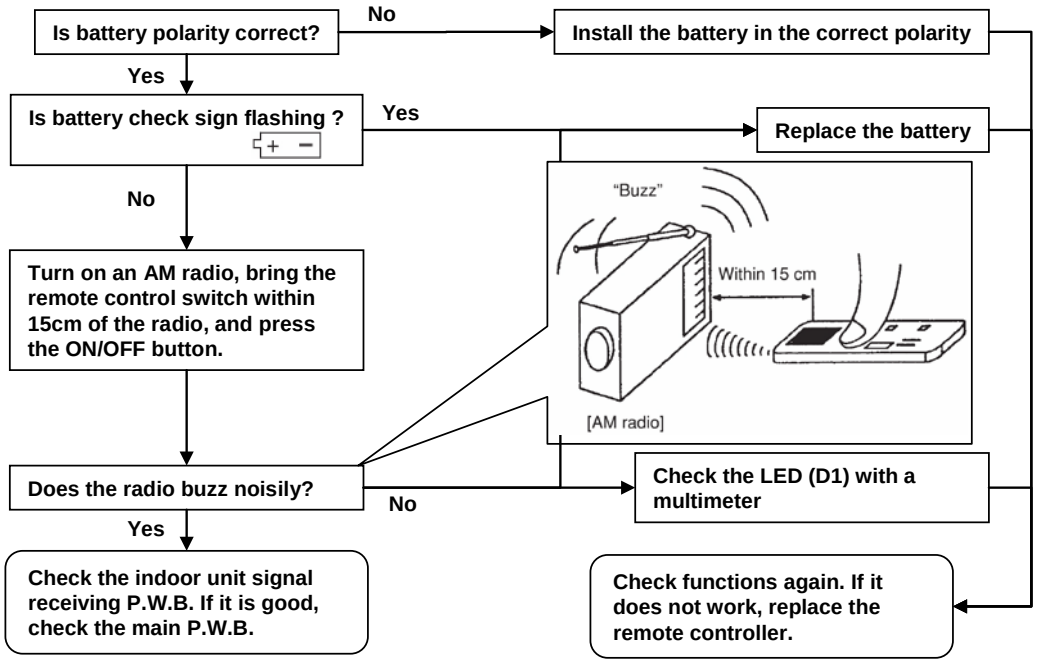

14.4.6 OUTDOOR UNIT DOES NOT OPERATE (BUT RECEIVES REMOTE INFRARED SIGNAL)

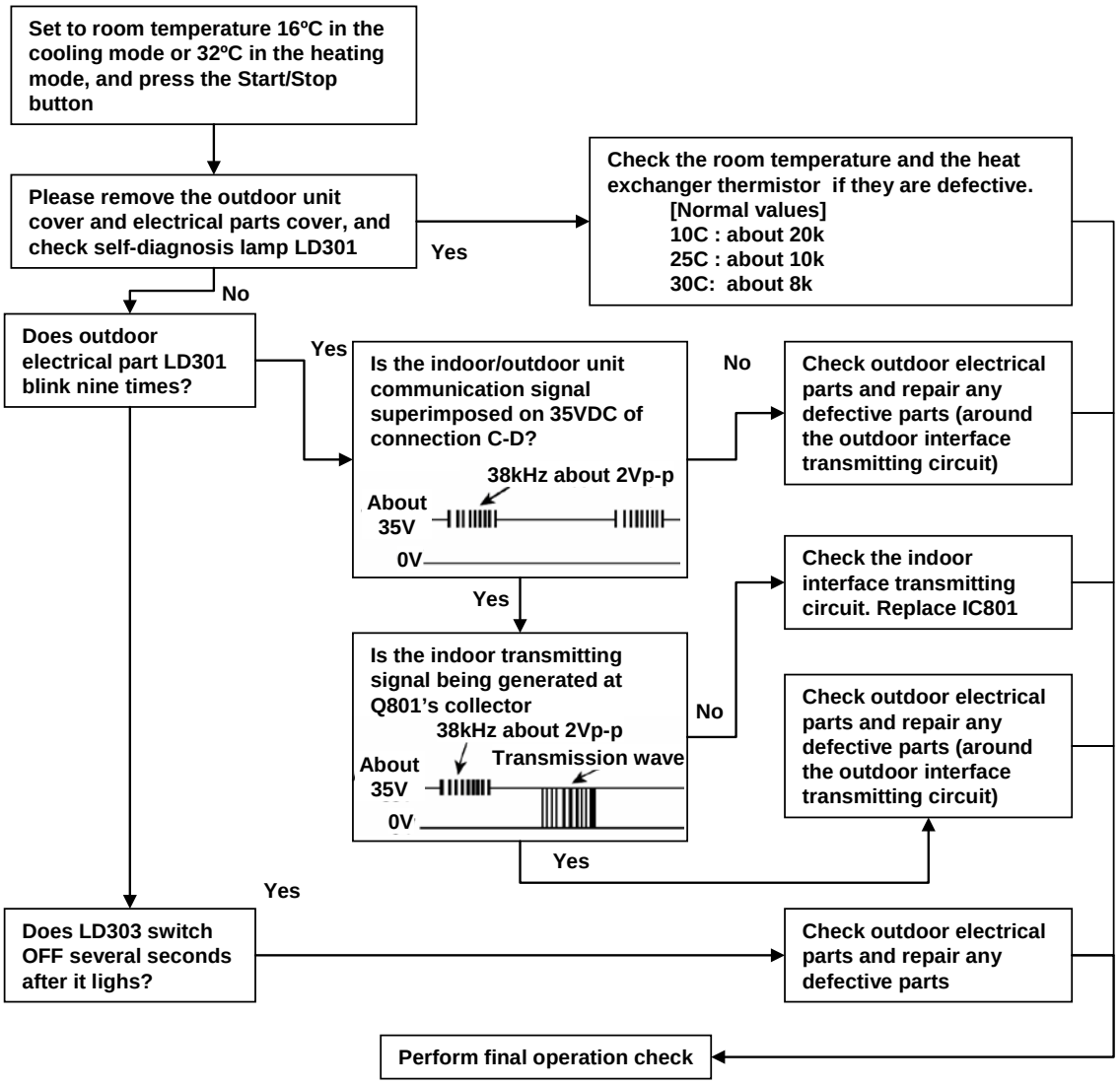

14.4.7 ALL SYSTEMS STOP FROM SEVERAL SECONDS TO SEVERAL MINUTES AFTER OPERATION IS STARTED (ALL INDICATORS ARE ALSO OFF)

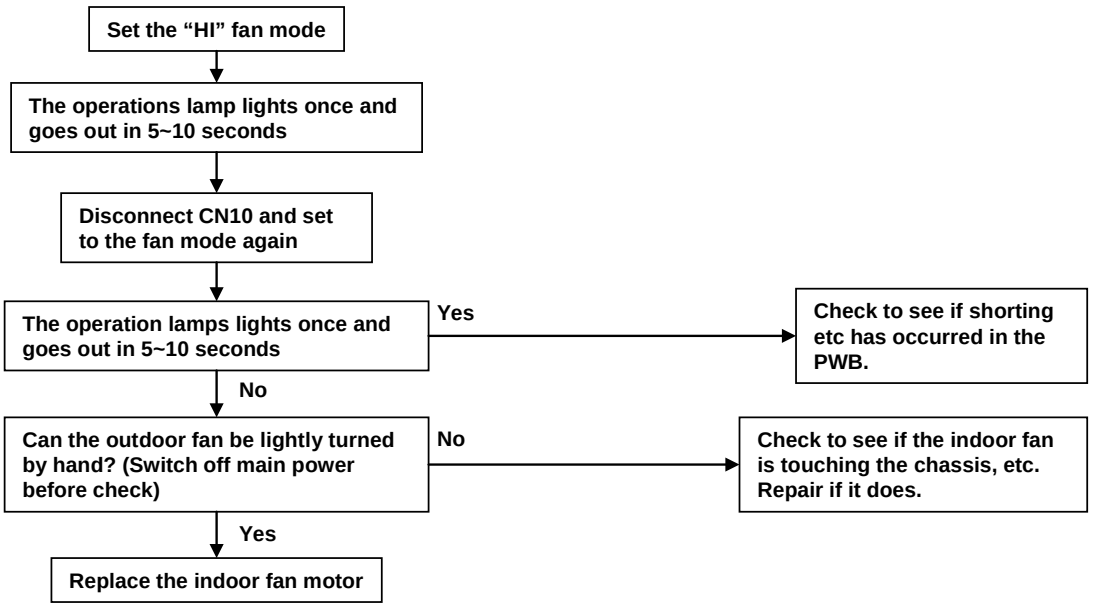

14.5 CHECKING OUTDOOR UNIT ELECTRICAL PARTS

14.5.1 NO OPERATION OR ABNORMAL OPERATION (RAC-18/25/35WPA, RAC-18/25/35/50WEA, RAC-25/35FPA, RAC-25/35FXA

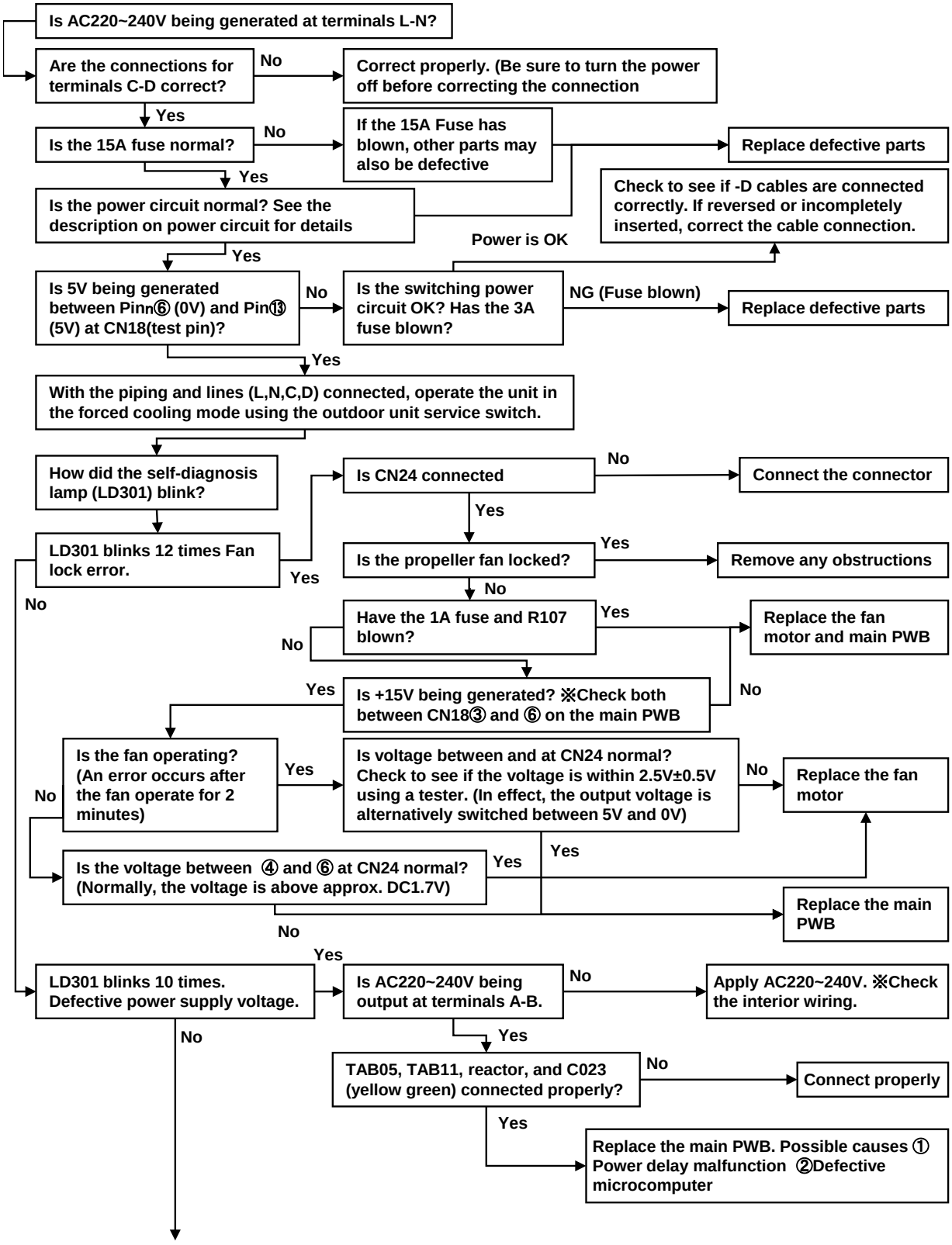

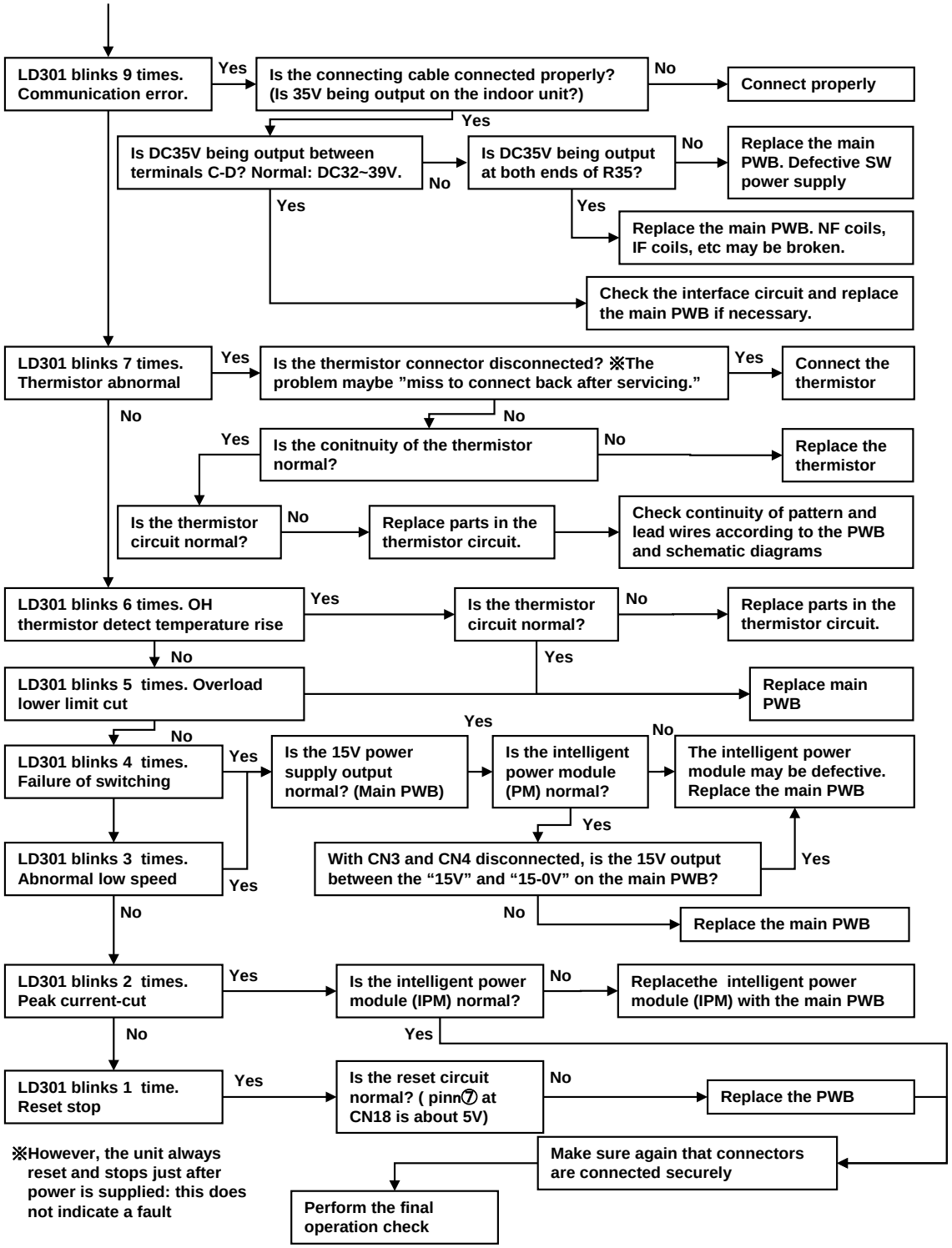
LD301 blinks 9 times. Communication error.
Yes
Is the connecting cable connected properly? (Is 35V being output on the indoor unit?)
No
Connect properly
Yes
Is DC35V being output between terminals C-D? Normal: DC32~39V.
No
Is DC35V being output at both ends of R35?
No
Replace the main PWB. Defective SW power supply
Yes
Yes
Replace the main PWB. NF coils, IF coils, etc may be broken.
Check the interface circuit and replace the main PWB if necessary.
LD301 blinks 7 times. Thermistor abnormal
Yes
Is the thermistor connector disconnected? ※The problem maybe "miss to connect back after servicing."
Yes
Connect the thermistor
No
No
Yes
Is the conitnuity of the thermistor normal?
No
Replace the thermistor
Is the thermistor circuit normal?
No
Replace parts in the thermistor circuit.
Check continuity of pattern and lead wires according to the PWB and schematic diagrams
LD301 blinks 6 times. OH thermistor detect temperature rise
Yes
Is the thermistor circuit normal?
No
Replace parts in the thermistor circuit.
No
Yes
LD301 blinks 5 times. Overload lower limit cut
Replace main PWB
Yes
No
No
LD301 blinks 4 times. Failure of switching
Yes
Is the 15V power supply output normal? (Main PWB)
Is the intelligent power module (PM) normal?
The intelligent power module may be defective. Replace the main PWB
Yes
LD301 blinks 3 times. Abnormal low speed
Yes
With CN3 and CN4 disconnected, is the 15V output between the "15V" and "15-0V" on the main PWB?
Yes
No
No
Replace the main PWB
LD301 blinks 2 times. Peak current-cut
Yes
Is the intelligent power module (IPM) normal?
No
Replacethe intelligent power module (IPM) with the main PWB
No
Yes
LD301 blinks 1 time. Reset stop
Yes
Is the reset circuit normal? (pinn⑦ at CN18 is about 5V)
No
Replace the PWB
※However, the unit always reset and stops just after power is supplied: this does not indicate a fault
Make sure again that connectors are connected securely
Perform the final operation check

14.5.2 NO OPERATION OR ABNORMAL OPERATION (RAC-18/25/35WSA, RAC-25/35/50WXA, RAC-50/60/70WPA, RAC-50FPA, RAC-50FXA, RAC-50/60/70DPA

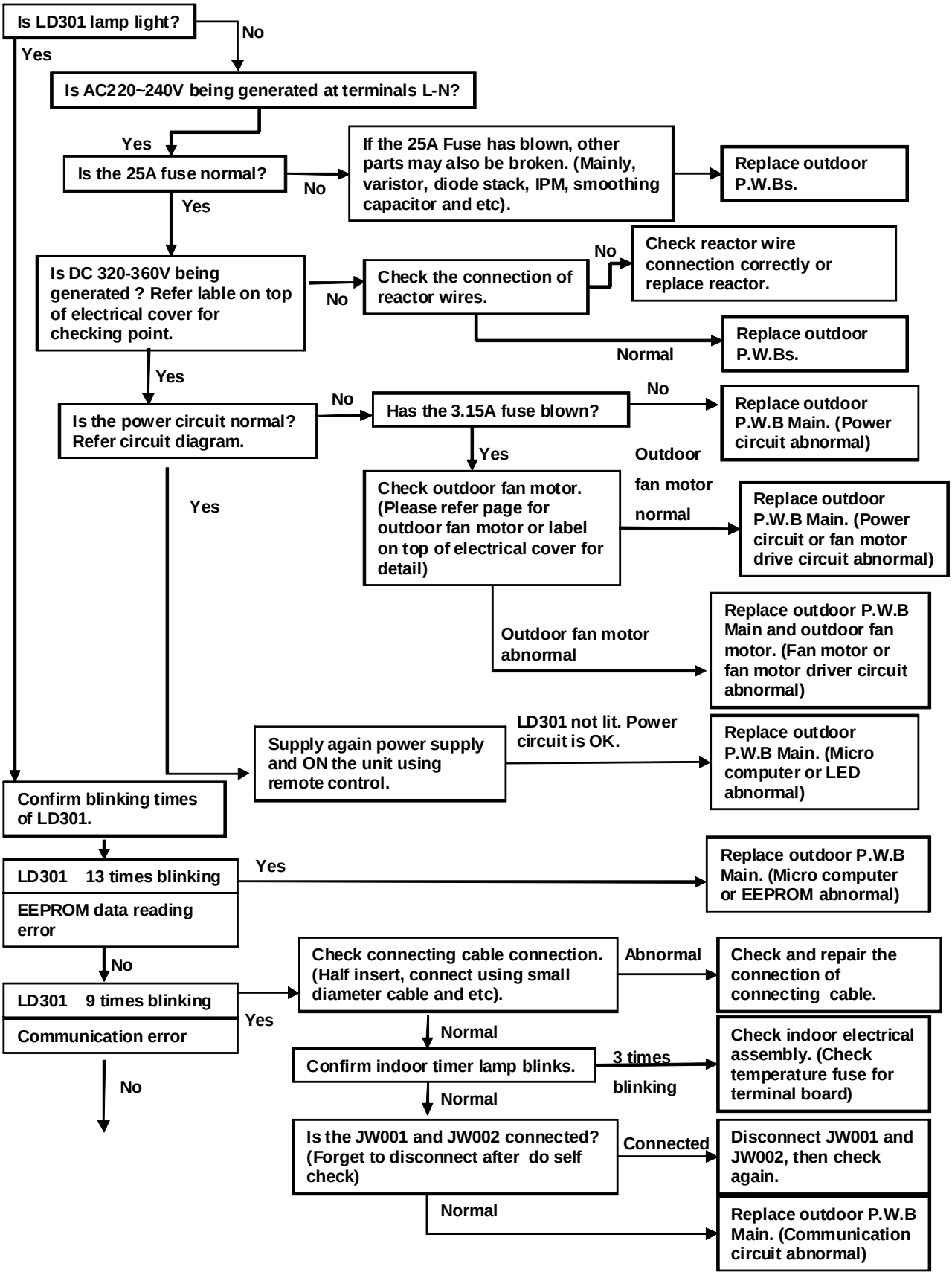

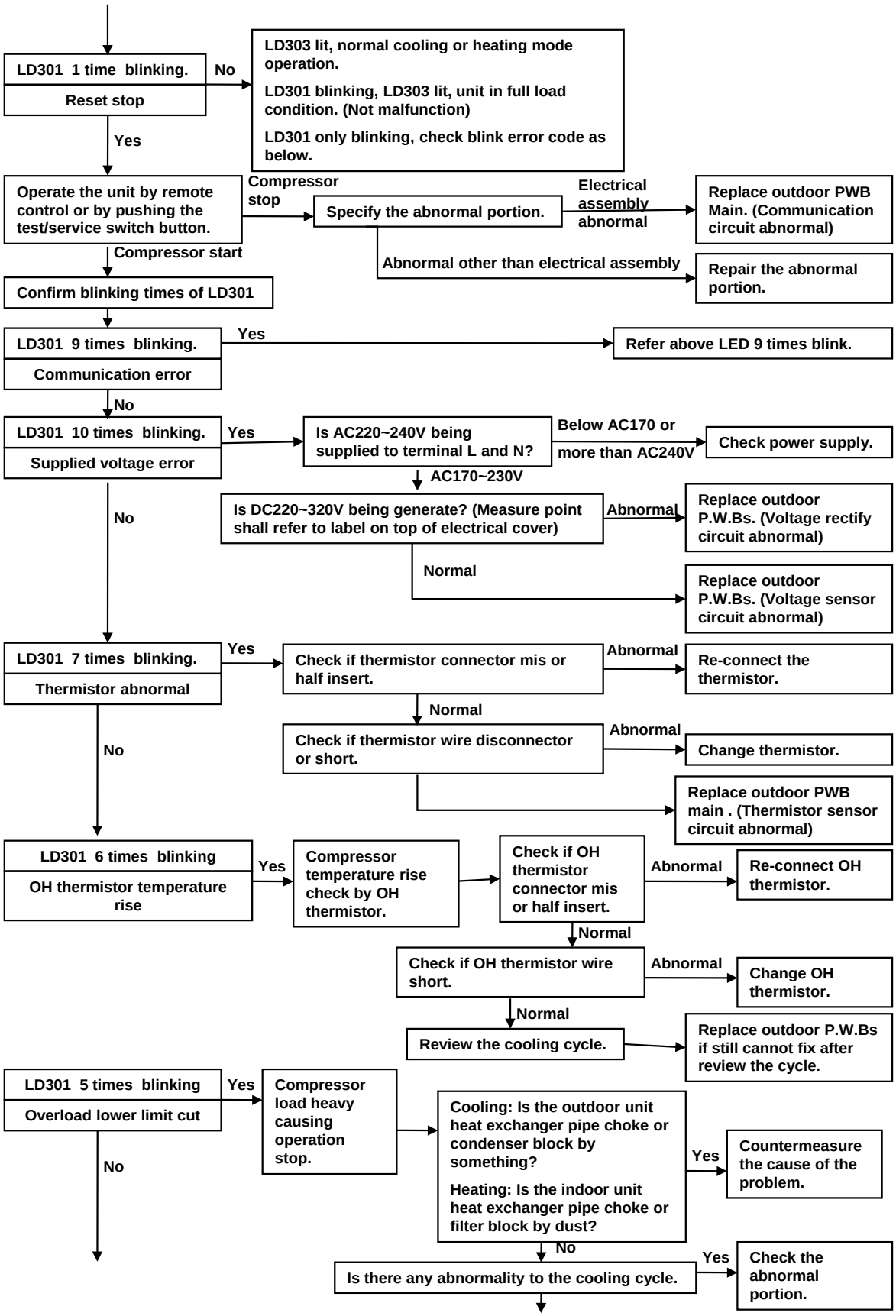
LD301 1 time blinking.
Reset stop
No
LD303 lit, normal cooling or heating mode operation.
LD301 blinking, LD303 lit, unit in full load condition. (Not malfunction)
LD301 only blinking, check blink error code as below.
Yes
Operate the unit by remote control or by pushing the test/service switch button.
Compressor stop
Specify the abnormal portion.
Electrical assembly abnormal
Replace outdoor PWB Main. (Communication circuit abnormal)
Abnormal other than electrical assembly
Repair the abnormal portion.
Compressor start
Confirm blinking times of LD301
LD301 9 times blinking.
Communication error
Yes
Refer above LED 9 times blink.
No
LD301 10 times blinking.
Supplied voltage error
Yes
Is AC220~240V being supplied to terminal L and N?
Below AC170 or more than AC240V
Check power supply.
AC170~230V
Is DC220~320V being generate? (Measure point shall refer to label on top of electrical cover)
Abnormal
Replace outdoor P.W.Bs. (Voltage rectify circuit abnormal)
Normal
Replace outdoor P.W.Bs. (Voltage sensor circuit abnormal)
No
LD301 7 times blinking.
Thermistor abnormal
Yes
Check if thermistor connector mis or half insert.
Abnormal
Re-connect the thermistor.
Normal
Check if thermistor wire disconnector or short.
Abnormal
Change thermistor.
Replace outdoor PWB main . (Thermistor sensor circuit abnormal)
No
LD301 6 times blinking
OH thermistor temperature rise
Yes
Compressor temperature rise check by OH thermistor.
Check if OH thermistor connector mis or half insert.
Abnormal
Re-connect OH thermistor.
Normal
Check if OH thermistor wire short.
Abnormal
Change OH thermistor.
Normal
Review the cooling cycle.
Replace outdoor P.W.Bs if still cannot fix after review the cycle.
LD301 5 times blinking
Overload lower limit cut
Yes
Compressor load heavy causing operation stop.
Cooling: Is the outdoor unit heat exchanger pipe choke or condenser block by something?
Heating: Is the indoor unit heat exchanger pipe choke or filter block by dust?
Yes
Countermeasure the cause of the problem.
No
No
Is there any abnormality to the cooling cycle.
Yes
Check the abnormal portion.

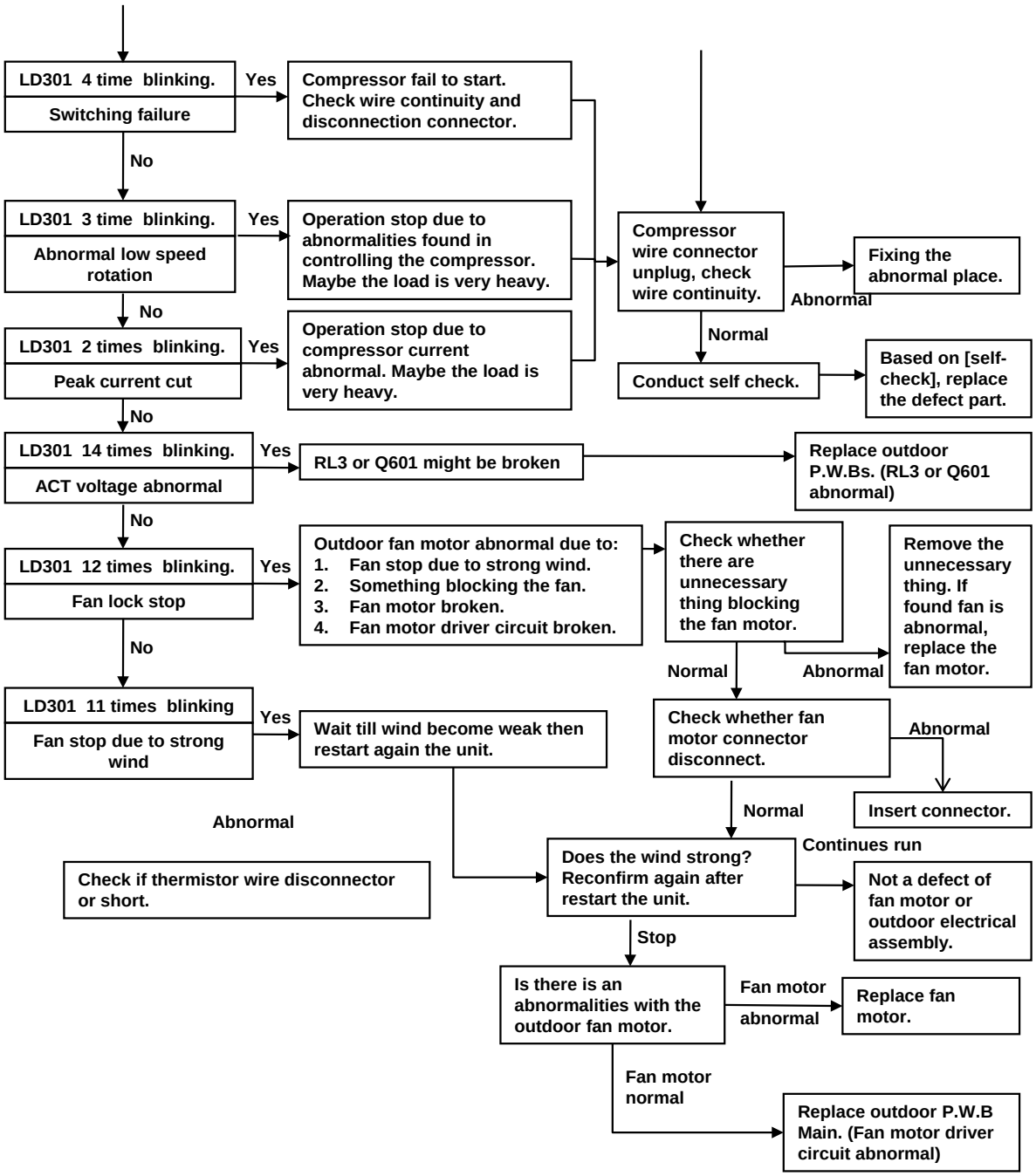
LD301 4 time blinking.
Switching failure
Yes
Compressor fail to start. Check wire continuity and disconnection connector.
No
LD301 3 time blinking.
Abnormal low speed rotation
Yes
Operation stop due to abnormalities found in controlling the compressor. Maybe the load is very heavy.
No
LD301 2 times blinking.
Peak current cut
Yes
Operation stop due to compressor current abnormal. Maybe the load is very heavy.
No
LD301 14 times blinking.
ACT voltage abnormal
Yes
RL3 or Q601 might be broken
Replace outdoor P.W.Bs. (RL3 or Q601 abnormal)
No
LD301 12 times blinking.
Fan lock stop
Yes
Outdoor fan motor abnormal due to:
1. Fan stop due to strong wind.
2. Something blocking the fan.
3. Fan motor broken.
4. Fan motor driver circuit broken.
Check whether there are unnecessary thing blocking the fan motor.
Abnormal
Remove the unnecessary thing. If found fan is abnormal, replace the fan motor.
Normal
No
LD301 11 times blinking
Fan stop due to strong wind
Yes
Wait till wind become weak then restart again the unit.
Check whether fan motor connector disconnect.
Abnormal
Insert connector.
Normal
Abnormal
Check if thermistor wire disconnector or short.
Does the wind strong? Reconfirm again after restart the unit.
Continues run
Not a defect of fan motor or outdoor electrical assembly.
Stop
Is there is an abnormalities with the outdoor fan motor.
Fan motor abnormal
Replace fan motor.
Fan motor normal
Replace outdoor P.W.B Main. (Fan motor driver circuit abnormal)
Compressor wire connector unplug, check wire continuity.
Abnormal
Fixing the abnormal place.
Normal
Conduct self check.
Based on [self-check], replace the defect part.

14.6 CHECKING BETWEEN GAS LEAKAGE AND COMPRESSOR FAULTY

14.6.1 TROUBLESHOOTING PROCEDURE (NO OPERATION, NO HEATING OR NO COOLING)

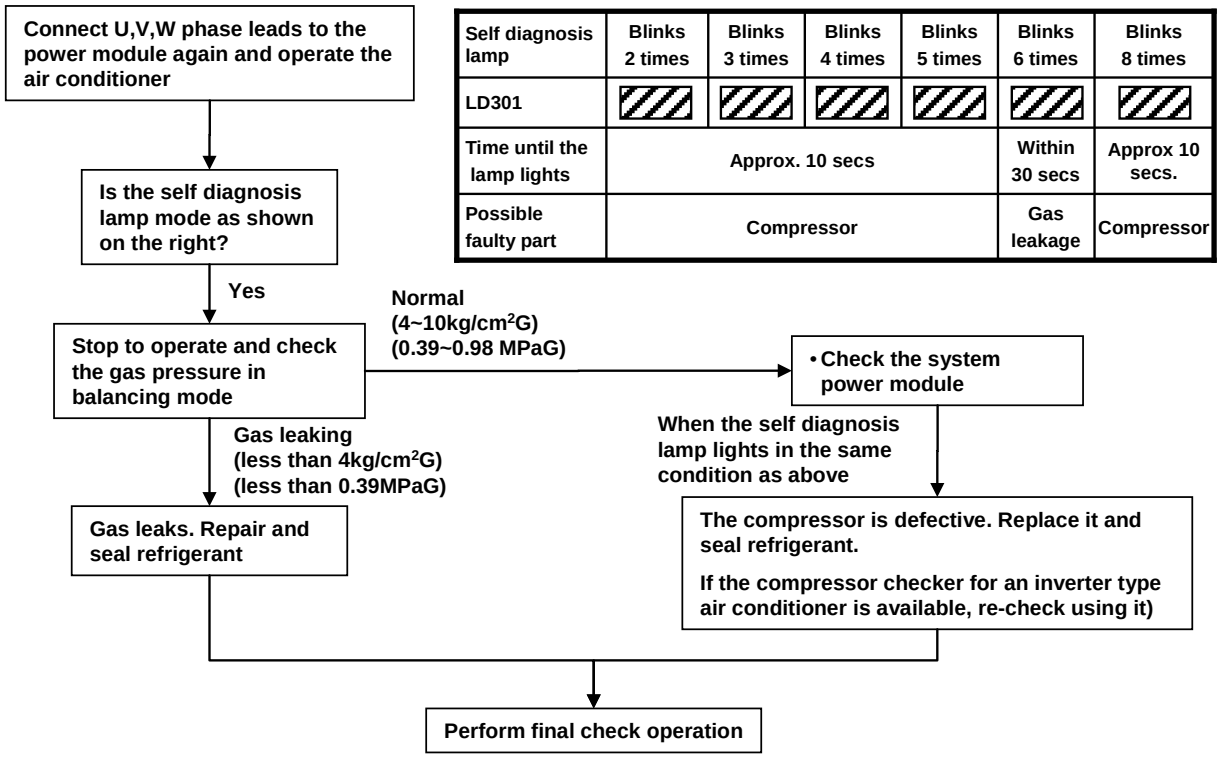

Self diagnosis lamp	Blinks 2 times	Blinks 3 times	Blinks 4 times	Blinks 5 times	Blinks 6 times	Blinks 8 times
LD301	▨	▨	▨	▨	▨	▨
Time until the lamp lights	Approx. 10 secs				Within 30 secs	Approx 10 secs.
Possible faulty part	Compressor				Gas leakage	Compressor

14.7 TROUBLESHOOTING WHEN INDOOR TIMER LAMP BLINKS

14.7.1 MONOZONE / MULTIZONE INDOOR

No	Blinking of TIMER lamp	Reason for indication	Possible causes	RAK	RAF	RAI	RAD
1	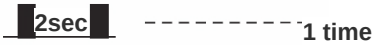	Refrigerant cycle abnormal When the indoor heat exchanger temperature is too low in the heating mode or it is too high in the cooling mode.	1) Reversing valve defective 2) Heat exchanger thermistor disconnected (only in heating mode) The malfunction mode is displayed only after the abnormal condition occurs 3rd time (read every 3 minutes *Note (for RAI & RAD) • Four-way valve faulty. • Disconnection in heat exchange thermistor (only during heating)	★	★	★	★
2	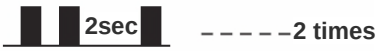	Outdoor unit forced operation. When the outdoor unit is in forced operation or balancing operation after forced operation	Electrical parts in the outdoor unit.	★	★	★	★
3		Indoor/outdoor interface defective When the interface signal from the outdoor unit is interrupted.	1) Indoor interface circuit. 2) Outdoor interface circuit	★	★	★	★
4		Outdoor electrical assembly defective When the error mode is detected times within 30 minutes from outdoor unit electrical components. (However, when error is detected 8 times within two hours only for outdoor thermistor	Outdoor unit electrical components. (For details, operate again using remote controller and check from self-diagnosis display of outdoor unit)	★	★	★	★
6		Abnormal water level detection All stop when the float switch has been activated	1) Drain stopped up 2) Drain pump 3) Float switch			★	★
7		Drain pump forced operation When the knob of drain pump test switch at indoor P.W.B main slide to “test” position.	1) Indoor PWB (Main)			★	★
9		Room thermistor or heat exchanger thermistor is faulty When room thermistor or heat exchanger thermistor is opened circuit or short circuit.	1) Room thermistor 2) Heat exhanger thermistor	★	★	★	★
10		Over-current detection at the DC fan motor Overcurrent in indoor DC fan motor has been detected.	1) Indoor fan locked 2) Indoor fan motor 3) Indoor control P.W.B.	★	★	★	★
11		IC401 or IC402 data reading error When data read from IC401 or IC402 is incorrect.	IC401 or IC402 abnormal	★	★	★	★

*Note: Refer to Chapter 9 for error codes displayed on remote controllers.

(Lights for 0.35 sec. at interval of 0.35 sec.)

<Cautions>
1) If the interface circuit is faulty when power is supplied, the self diagnosis display will not be displayed
2) If the indoor unit does not operate at all, check if the connecting cable is connected to the outdoor unit.

14.7.2 MONO SPLIT INDOOR (RAK-25/35PXA, RAK-18/25/35/50/60/70PPA, RAK-18/25/35/50PEA, RAF-25/35/50RPA)

No	Blinking of TIMER lamp	Reason for indication	Possible causes
1	2sec. 1 time	Reversing valve defective When the indoor heat exchanger temperature is too low in the heating mode or it is too high in the cooling mode. 1times	1) Reversing valve defective 2) Heat exchanger thermistor disconnected (only in heating mode) (Note) The malfunction mode is displayed only after the abnormal condition occurrs 3rd time (read every 3 minutes
2	2sec. 2 times	Outdoor unit is under forced operation. When the outdoor unit is in forced operation or balancing operation after forced operation	Electrical parts in the outdoor unit.
3	2sec. 3 times	Indoor/outdoor interface defective When the interface signal from the outdoor unit is interrupted.	1) Indoor interface circuit. 2) Outdoor interface circuit
4	2sec. 4 times	Outdoor unit electrical components defective When the error mode is detected times within 30 minutes from outdoor unit electrical components. (However, when error is detected 8 times within two hours only for outdoor thermistor	Outdoor unit electrical components. (For details, operate again using remote controller and check from self-diagnosis display of outdoor unit)
5	2sec. 9 times	Room thermistor or heat exchanger thermistor is faulty When room thermistor or heat exchanger thermistor is opened circuit or short circuit.	1) Room thermistor 2) Heat exhanger thermistor
5	2sec 10times	Over-current detection at the DC fan motor When over-current is detected at the DC fan motor of the indoor unit. 10times	1) Indoor fan locked 2) Indoor fan motor 3) Indoor control P.W.B.
※1 7	2sec. 13times	IC401 or IC402 data reading error When data read from IC401 or IC402 is incorrect.	IC401 or IC402 abnormal

*Note: Refer to Chapter 9 for error codes displayed on remote controllers.

(Lights for 0.35 sec. at interval of 0.35 sec.)

<Cautions>

3) If the interface circuit is faulty when power is supplied, the self diagnosis display will not be displayed
4) If the indoor unit does not operate at all, check if the connecting cable is connected to the outdoor unit.
5) To check operation again when the timer lamp is blinking, you can use the remote control for operation (except for mode mark ※1)

14.7.3 MONO SPLIT INDOOR (RAK-18/25/35PSA, RAK-18/25/35PSAN, RAK-18/25/35PSPA)

No	Blinking of TIMER lamp	Reason for indication	Possible causes
1	2sec. -1 time-	Reversing valve defective When the indoor heat exchanger temperature is too low in the heating mode or it is too high in the cooling mode. 1times	1) Reversing valve defective 2) Heat exchanger thermistor disconnected (only in heating mode) (Note) The malfunction mode is displayed only after the abnormal condition occurrs 3rd time (read every 3 minutes
2	2sec. -2 times	Outdoor unit is under forced operation. When the outdoor unit is in forced operation or balancing operation after forced operation	Electrical parts in the outdoor unit.
3	2sec. -3 times	Indoor/outdoor interface defective When the interface signal from the outdoor unit is interrupted.	1) Indoor interface circuit. 2) Outdoor interface circuit
4	2sec -5 times	Malfunction of Power Relay	Power Relay Defective
5	2sec. 9 times	Room thermistor or heat exchanger thermistor is faulty When room thermistor or heat exchanger thermistor is opened circuit or short circuit.	1) Room thermistor 2) Heat exhanger thermistor
6	2sec 10times	Over-current detection at the DC fan motor When over-current is detected at the DC fan motor of the indoor unit. 10times	1) Indoor fan locked 2) Indoor fan motor 3) Indoor control P.W.B.
7	2sec 11times		High Voltage Generator Defective
8	2sec 12times		1) Connecting Cord Defective 2) Outdoor Defective
9	2sec. 13times	IC401 or IC402 data reading error When data read from IC401 or IC402 is incorrect.	IC401 or IC402 abnormal
10	2sec. 17times		Switch PWB Defective
11	2sec. 18times		Cleaning Unit Defective
12	2sec. 19times		Failure of Peltier Device

*Note: Refer to Chapter 9 for error codes displayed on remote controllers.

(Lights for 0.35 sec. at interval of 0.35 sec.)

<Cautions>
1) If the interface circuit is faulty when power is supplied, the self diagnosis display will not be displayed
2) If the indoor unit does not operate at all, check if the connecting cable is connected to the outdoor unit.

14.7.4 MONO SPLIT INDOOR (RAK-50PXA)

No	Blinking of TIMER lamp	Reason for indication	Possible causes
1	2sec. ------1 time-	Reversing valve defective When the indoor heat exchanger temperature is too low in the heating mode or it is too high in the cooling mode. 1times	1) Reversing valve defective 2) Heat exchanger thermistor disconnected (only in heating mode) (Note) The malfunction mode is displayed only after the abnormal condition occurrs 3rd time (read every 3 minutes
2	2sec. ----2 times	Outdoor unit is under forced operation. When the outdoor unit is in forced operation or balancing operation after forced operation	Electrical parts in the outdoor unit.
3	2sec. ---3 times	Indoor/outdoor interface defective When the interface signal from the outdoor unit is interrupted.	1) Indoor interface circuit. 2) Outdoor interface circuit
4	2sec. ---4 times	Outdoor unit electrical components defective When the error mode is detected times within 30 minutes from outdoor unit electrical components. (However, when error is detected 8 times within two hours only for outdoor thermistor	Outdoor unit electrical components. (For details, operate again using remote controller and check from self-diagnosis display of outdoor unit)
5	2sec. 9 times	Room thermistor or heat exchanger thermistor is faulty When room thermistor or heat exchanger thermistor is opened circuit or short circuit.	1) Room thermistor 2) Heat exhanger thermistor
6	2sec 10~~times~~	Over-current detection at the DC fan motor When over-current is detected at the DC fan motor of the indoor unit. 10times	1) Indoor fan locked 2) Indoor fan motor 3) Indoor control P.W.B.
※1 7	2sec 11~~times~~		Abnormal of ionizer.
8	2sec 12~~times~~	Interface voltage error	1) Connecting Cord Defective 2) Outdoor Defective
9	2sec. 13~~times~~	IC401 or IC402 data reading error When data read from IC401 or IC402 is incorrect.	IC401 or IC402 abnormal

*Note: Refer to Chapter 9 for error codes displayed on remote controllers.

(--- Lights for 0.35 sec. at interval of 0.35 sec.)

<Cautions>

1) If the interface circuit is faulty when power is supplied, the self diagnosis display will not be displayed
2) If the indoor unit does not operate at all, check if the connecting cable is connected to the outdoor unit.
3) To check operation again when the timer lamp is blinking, you can use the remote control for eoperation (except for mode mark ※1)

14.7.5 MONO SPLIT INDOOR (RAF-25/35/50PXA)

No	Blinking of TIMER lamp	Reason for indication	Possible causes
1	2sec. ------1 time-	Reversing valve defective When the indoor heat exchanger temperature is too low in the heating mode or it is too high in the cooling mode. 1times	1) Reversing valve defective 2) Heat exchanger thermistor disconnected (only in heating mode) (Note) The malfunction mode is displayed only after the abnormal condition occurrs 3rd time (read every 3 minutes
2	2sec. ----2 times	Outdoor unit is under forced operation. When the outdoor unit is in forced operation or balancing operation after forced operation	Electrical parts in the outdoor unit.
3	2sec. ---3 times	Indoor/outdoor interface defective When the interface signal from the outdoor unit is interrupted.	1) Indoor interface circuit. 2) Outdoor interface circuit
4	2sec. ---4 times	Outdoor unit electrical components defective When the error mode is detected times within 30 minutes from outdoor unit electrical components. (However, when error is detected 8 times within two hours only for outdoor thermistor	Outdoor unit electrical components. (For details, operate again using remote controller and check from self-diagnosis display of outdoor unit)
5	2sec. 9 times	Room thermistor or heat exchanger thermistor is faulty When room thermistor or heat exchanger thermistor is opened circuit or short circuit.	1) Room thermistor 2) Heat exhanger thermistor
6	2sec 10times	Over-current detection at the DC fan motor When over-current is detected at the DC fan motor of the indoor unit. 10times	1) Indoor fan locked 2) Indoor fan motor 3) Indoor control P.W.B.
8	2sec 12times	Interface voltage error	1) Connecting Cord Defective 2) Outdoor Defective
9	2sec. 13times	IC401 or IC402 data reading error When data read from IC401 or IC402 is incorrect.	IC401 or IC402 abnormal

*Note: Refer to Chapter 9 for error codes displayed on remote controllers.

(--- Lights for 0.35 sec. at interval of 0.35 sec.)

<Cautions>

1) If the interface circuit is faulty when power is supplied, the self diagnosis display will not be displayed
2) If the indoor unit does not operate at all, check if the connecting cable is connected to the outdoor unit.

14.7.6 MONO SPLIT INDOOR (RAD-50/60/70PPA)

No	Blinking of TIMER lamp	Reason for indication	Possible causes
1	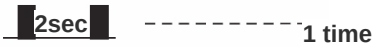	Refrigerant cycle abnormal When the indoor heat exchanger temperature is too low in the heating mode or it is too high in the cooling mode.	1) Reversing valve defective 2) Heat exchanger thermistor disconnected (only in heating mode) The malfunction mode is displayed only after the abnormal condition occurs 3rd time (read every 3 minutes *Note (for RAI & RAD) • Four-way valve faulty. • Disconnection in heat exchange thermistor (only during heating)
2	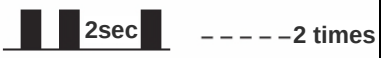	Outdoor unit forced operation. When the outdoor unit is in forced operation or balancing operation after forced operation	Electrical parts in the outdoor unit.
3		Indoor/outdoor interface defective When the interface signal from the outdoor unit is interrupted.	1) Indoor interface circuit. 2) Outdoor interface circuit
4		Outdoor electrical assembly defective When the error mode is detected times within 30 minutes from outdoor unit electrical components. (However, when error is detected 8 times within two hours only for outdoor thermistor	Outdoor unit electrical components. (For details, operate again using remote controller and check from self-diagnosis display of outdoor unit)
6		Abnormal water level detection All stop when the float switch has been activated	1) Drain stopped up 2) Drain pump 3) Float switch
7		Drain pump forced operation When the knob of drain pump test switch at indoor P.W.B main slide to “test” position.	Indoor PWB (Main)
9		Room thermistor or heat exchanger thermistor is faulty When room thermistor or heat exchanger thermistor is opened circuit or short circuit.	1) Room thermistor 2) Heat exhanger thermistor
10		Over-current detection at the DC fan motor Overcurrent in indoor DC fan motor has been detected.	1) Indoor fan locked 2) Indoor fan motor 3) Indoor control P.W.B.
11 ※1		IC401 or IC402 data reading error When data read from IC401 or IC402 is incorrect.	IC401 or IC402 abnormal

*Note: Refer to Chapter 9 for error codes displayed on remote controllers.

(Lights for 0.35 sec. at interval of 0.35 sec.)

<Cautions>
1) If the interface circuit is faulty when power is supplied, the self diagnosis display will not be displayed
2) If the indoor unit does not operate at all, check if the connecting cable is connected to the outdoor unit.
3) To check operation again when the timer lamp is blinking, you can use the remote control for eoperation (except for mode mark ※1)

14.8 TROUBLESHOOTING WHEN OUTDOOR LED LAMP BLINKS

14.8.1 MONOZONE RAC-25NPA / 35NPA / 50NPA

SELF-DIAGNOSIS LIGHTING MODE ■ : LIGHT ▨ : BLINK □ : OFF				
LD301	LD302	SELF DIAGNOSIS NAME	DETAIL	MAIN CHECK POINT
1. DURING OPERATION			**LD303 (RED) LIGHTS. ■**	
□	□	Normal operation	Compressor operation	Not malfunction
■	□	Overload (1)	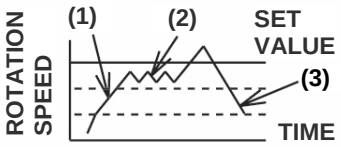	The rotation speed is automatically controlled to protect the compressor in the overload condition. This shows an overload but not malfunction.
□	■	Overload (2)		
■	■	Overload (3)		
2. DURING STOP			**LD303 (RED) GOES OFF. □**	
□	□	Normal stop	Stopped by Thermostat or Controller	NOT MALFUNCTION
▨	□	Reset stop	Microprocessor was re-booted. (It is NORMAL when power SW has been turned ON)	①Main P.W.B.
1 time				
▨	□	Peak current cut	Compressor Peak Current was beyond the maximum limit	①Main P.W.B. ②Compressor
2 times				
▨	□	Abnormal low speed rotation	Compressor Rotor position could not be detected.	①Main P.W.B. ②Compressor
3 times				
▨	□	Switching failure	Switching from low frequency sync start to position detection operation failure	①Main P.W.B. ②Compressor
4 times				
▨	□	Overload lower limit cut	Overload protection mechanism is requesting compressor to run at a speed lower than the minimum speed limit	①Outdoor unit is exposed to direct sunlight or its airflow is blocked. ②Fan motor ③Main PWB ④The Voltage is extremely LOW
5 times				
▨	□	OH thermistor temperature rise	OH thermistor detected compressor overheat	①Leak of refrigerant. ②Compressor ③OH thermistor circuit.
6 times				
▨	□	Thermistor abnormal	Abnormal thermistor value was detected (Open or Short)	①Thermistor. ②Connection of thermistor defective. ③Thermistor circuit.
7 times				
▨	□	Acceleration failure	Compressor acceleration was not more that the minimum speed setting.	①Leak of refrigerant. ②Compressor.
8 times				
▨	□	Communication error	Communication between indoor and outdoor is interrupted	①C-D cable wrongly connected ②Open connection on the C-D cable. ③Interface circuit of indoor/outdoor unit.
9 times				
▨	□	Abnormal power voltage	Abnormal power source is detected.	①Abnormal power source ②Cable is wrongly connected ③Main P.W.B.
10 times				
▨	□	Fan lock error	Outdoor fan actual rpm could not reach as per instructed.	①Outdoor fan motor ②Fan motor circuit.
12 times				
▨	□	EEPROM read error	Microcomputer cannot read the data in EEPROM.	①Main P.W.B.
13 times				
▨	□	ACTIVE CONVERTER defective	Over Voltage is detected by System Power Module	①System Power Module.
14 times				
Example of blinking (5 times)				■ : **Lights for 0.25 sec at interval of 0.25 sec**

14.8.2 MULTIZONE

SELF-DIAGNOSIS LIGHTING MODE ■ : LIGHT ▨ : BLINK □ : OFF

LD3011 RED	LD3021 RED	LD3031 RED	LD3041 GRN	SELF DIAGNOSIS NAME	DETAIL	MAIN CHECK POINT
1. DURING OPERATION						
□	□	■	□	Normal Operation	Compressor Operation	Not Malfunction
■	□	■	□	Overload (1)	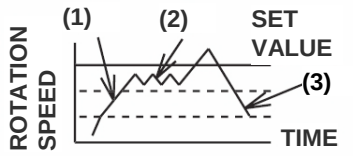	The rotation speed is automatically controlled to protect the compressor in the overload condition. This shows an overload but not malfunction.
□	■	■	□	Overload (2)		
■	■	■	□	Overload (3)		
Example of blinking (5 times)					■ : Lights for 0.25 sec at interval of 0.25 sec	
2. DURING STOP						
□	□	■	□	Abnormal Thermistor	Thermistor is opened or shorted. Refer to the table below	①Thermistor ②Connection of Thermistor is faulty ③Thermistor Circuit
Lit	1~11 Times					

Blinking times	Reference Table for Abnormal Thermistor		
1 Times	Overheat Thermsitor	8 Times	Narrow Pipe Thermistor (Indoor 3)
2 Times	Defrost Thermistor	9 Times	Wide Pipe Thermistor (Indoor 3)
3 Times	Outdoor Temperature Thermistor	10 Times	Narrow Pipe Thermistor (Indoor 4)
4 Times	Narrow Pipe Thermistor (Indoor 1)	11 Times	Wide Pipe Thermistor (Indoor 4)
5 Times	Wide Pipe Thermistor (Indoor 1)	12 Times	Narrow Pipe Thermistor (Indoor 5)
6 Times	Narrow Pipe Thermistor (Indoor 2)	13 Times	Wide Pipe Thermistor (Indoor 5)
7 Times	Wide Pipe Thermistor (Indoor 2)		

LD3011 RED	LD3021 RED	LD3031 RED	LD3041 GRN	SELF DIAGNOSIS NAME	DETAIL	MAIN CHECK POINT
□	□	□	□	Normal Stop	Indoor Thermostat OFF. Main Operation OFF	Not Malfunction
▨	□	□	□	Reset STOP	When stop with Power RESET (Normal when power has been Switched ON)	①P.W.B. (Power Circuit, HIC, ETC)
1 Time						
▨	□	□	□	Peak Current Cut	Over Current is Detected	①Compressor ②P.W.B.
▨	▨	□	□			①System Power Module ②P.W.B.
2 Times						
▨	□	□	□	Abnormal Low Speed Rotation	Position Detection Signal is not input during operation	①System Power Module ②Compressor ③ P.W.B
3 Times						
▨	□	□	□	Switching Failure	Fail to Switch from Initial Low Frequency Sync to Position Detection Signal	①System Power Module ②Compressor ③ P.W.B
4 Times						
▨	□	□	□	Overload Lower Limit Cut	Overload protection mechanism is requesting compressor to run at a speed lower than the minimum speed limit	①Outdoor unit is exposed to direct sunlight or its airflow is blocked. ②Fan motor ③Main PWB ④The Voltage is extremely LOW
5 Times						

SELF-DIAGNOSIS LIGHTING MODE					: LIGHT	: BLINK	: OFF
LD301 RED	LD302 RED	LD303 RED	LD304 GRN	SELF DIAGNOSIS NAME	DETAIL	MAIN CHECK POINT	
▨	□	□	□	OH thermistor temperature rise	OH thermistor detected compressor overheat	①Leak of refrigerant. ②Compressor ③OH thermistor circuit.	
6 Times							
▨	□	□	□	Thermistor abnormal	Abnormal thermistor value was detected (Open or Short)	①Thermistor. ②Connection of thermistor defective. ③Thermistor circuit.	
7 Times							
▨	□	□	□	Acceleration failure	Compressor acceleration was not more that the minimum speed setting.	①Leak of refrigerant. ②Compressor.	
8 Times							
▨	□	□	□	Communication error	Communication between indoor and outdoor is interrupted	①C-D cable wrongly connected ②Open connection on the C-D cable. ③Interface circuit of indoor/outdoor unit.	
9 Times							
▨	□	□	□	Abnormal power voltage	Abnormal power source is detected.	①Abnormal power source ②Cable is wrongly connected ③Main P.W.B.	
10 Times							
▨	□	□	□	Fan lock error	Outdoor fan actual rpm could not reach as per instructed.	①Outdoor fan motor ②Fan motor circuit.	
12 Times							
▨	□	□	□	EEPROM read error	Microcomputer cannot read the data in EEPROM.	①Main P.W.B.	
13 Times							
▨	□	□	□	ACTIVE CONVERTER defective	Over Voltage is detected by System Power Module	①System Power Module.	
14 Times							
Example of blinking (5 times)					2sec	Lights for 0.25 sec at interval of 0.25 sec	

.

14.8.3 COMMUNICATION ERROR DIAGNOSIS MULTIZONE RAM- 53NP3A / 68NP3A / 70NP4A / 130NP6A

SELF-DIAGNOSIS LIGHTING MODE					: LIGHT	: BLINK	: OFF
LD301 RED	LD302 RED	LD303 RED	LD304 GRN	SELF DIAGNOSIS NAME	DETAIL		MAIN CHECK POINT
1. **DURING OPERATION**							
□	□	□	▨	Communication Error between Indoor and Outdoor	Communication Error of Indoor 1	When Indoor unit is not connected, It blinks similarly. Not Malfunction.	①Cable is wrongly connected ②Cable is open ③Interface Circuit between Indoor and Outdoor Unit
1 Time							
□	□	□	▨		Communication Error of Indoor 2		
2 Times							
□	□	□	▨		Communication Error of Indoor 3		
3 Times							
□	□	□	▨		Communication Error of Indoor 4		
4 Times							

14.8.4 COMMUNICATION ERROR DIAGNOSIS MULTIZONE RAM-90NP5A

SELF-DIAGNOSIS LIGHTING MODE					■ : LIGHT ▨ : BLINK □ : OFF		
LD304 GRN	LD305 GRN	LD306 GRN	LD307 GRN	LD308 GRN	SELF DIAGNOSIS NAME	DETAIL	MAIN CHECK POINT
2. **DURING OPERATION**							
□	■	■	■	■	Communication Error between Indoor and Outdoor	Communication Error of Indoor 1	When Indoor unit is not connected, It blinks similarly. Not Malfunction.
■	□	■	■	■		Communication Error of Indoor 2	①Cable is wrongly connected ②Cable is open ③Interface Circuit between Indoor and Outdoor Unit
■	■	□	■	■		Communication Error of Indoor 3	
■	■	■	□	■		Communication Error of Indoor 4	
■	■	■	■	□		Communication Error of Indoor 5	

14.8.5 MONO SPLIT(RAC-18/25/35WPA, RAC-25/35WXA, RAC-25/35FXA)

SELF-DIAGNOSIS LIGHTING MODE		■ : LIGHT ▨ : BLINK □ : OFF		
LD301	LD302	SELF DIAGNOSIS NAME	DETAIL	MAIN CHECK POINT
1. DURING OPERATION			**LD303 (RED) LIGHTS. ■**	
□	□	Normal operation	Compressor operation	Not malfunction
■	□	Overload (1)	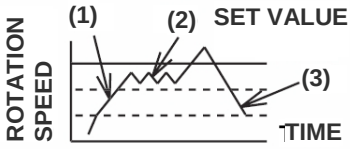	The rotation speed is automatically controlled to protect the compressor in the overload condition. This shows an overload but not malfunction.
□	■	Overload (2)		
■	■	Overload (3)		
2. DURING STOP			**LD303 (RED) GOES OFF. □**	
□	□	Normal stop	Stopped by Thermostat or Controller	NOT MALFUNCTION
▨	□	Reset stop	Microprocessor was re-booted. (It is NORMAL when power SW has been turned ON)	①Main P.W.B.
1 time				
▨	□	Peak current cut	Compressor Peak Current was beyond the maximum limit	①Main P.W.B. ②Compressor
2 times				
▨	□	Abnormal low speed rotation	Compressor Rotor position could not be detected.	①Main P.W.B. ②Compressor
3 times				
▨	□	Switching failure	Switching from low frequency sync start to position detection operation failure	①Main P.W.B. ②Compressor
4 times				
▨	□	Overload lower limit cut	Overload protection mechanism is requesting compressor to run at a speed lower than the minimum speed limit	①Outdoor unit is exposed to direct sunlight or its airflow is blocked. ②Fan motor ③Main PWB ④The Voltage is extremely LOW
5 times				
▨	□	OH thermistor temperature rise	OH thermistor detected compressor overheat	①Leak of refrigerant. ②Compressor ③OH thermistor circuit.
6 times				
▨	□	Thermistor abnormal	Abnormal thermistor value was detected (Open or Short)	①Thermistor. ②Connection of thermistor defective. ③Thermistor circuit.
7 times				
▨	□	Acceleration failure	Compressor acceleration was not more that the minimum speed setting.	①Leak of refrigerant. ②Compressor.
8 times				
▨	□	Communication error	Communication between indoor and	①C-D cable wrongly connected

9 times		outdoor is interrupted	②Open connection on the C-D cable. ③Interface circuit of indoor/outdoor unit.
▨ □ 10 times	Abnormal power voltage	Abnormal power source is detected.	①Abnormal power source ②Cable is wrongly connected ③Main P.W.B.
▨ □ 12 times	Fan lock error	Outdoor fan actual rpm could not reach as per instructed.	①Outdoor fan motor ②Fan motor circuit.
▨ □ 13 times	EEPROM read error	Microcomputer cannot read the data in EEPROM.	①Main P.W.B.
Example of blinking (5 times)			■: Lights for 0.25 sec at interval of 0.25 sec

14.8.6 MONO SPLIT (RAC-50WXA, RAC-50FXA

SELF-DIAGNOSIS LIGHTING MODE		■ : LIGHT	▨ : BLINK	□ : OFF
LD301	LD302	SELF DIAGNOSIS NAME	DETAIL	MAIN CHECK POINT
1. DURING OPERATION			**LD303 (RED) LIGHTS. ■**	
□	□	Normal operation	Compressor operation	Not malfunction
■	□	Overload (1)	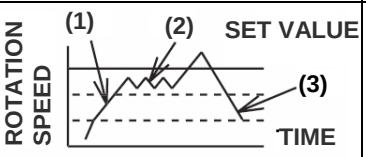	The rotation speed is automatically controlled to protect the compressor in the overload condition. This shows an overload but not malfunction.
□	■	Overload (2)		
■	■	Overload (3)		
2. DURING STOP			**LD303 (RED) GOES OFF. □**	
□	□	Normal stop	Stopped by Thermostat or Controller	NOT MALFUNCTION
▨ □ 1 time		Reset stop	Microprocessor was re-booted. (It is NORMAL when power SW has been turned ON)	①Main P.W.B.
▨ □ 2 times		Peak current cut	Compressor Peak Current was beyond the maximum limit	①Main P.W.B. ②Compressor
▨ □ 3 times		Abnormal low speed rotation	Compressor Rotor position could not be detected.	①Main P.W.B. ②Compressor
▨ □ 4 times		Switching failure	Switching from low frequency sync start to position detection operation failure	①Main P.W.B. ②Compressor
▨ □ 5 times		Overload lower limit cut	Overload protection mechanism is requesting compressor to run at a speed lower than the minimum speed limit	①Outdoor unit is exposed to direct sunlight or its airflow is blocked. ②Fan motor ③Main PWB ④The Voltage is extremely LOW
▨ □ 6 times		OH thermistor temperature rise	OH thermistor detected compressor overheat	①Leak of refrigerant. ②Compressor ③OH thermistor circuit.
▨ □ 7 times		Thermistor abnormal	Abnormal thermistor value was detected (Open or Short)	①Thermistor. ②Connection of thermistor defective. ③Thermistor circuit.
▨ □ 8 times		Acceleration failure	Compressor acceleration was not more that the minimum speed setting.	①Leak of refrigerant. ②Compressor.
▨ □ 9 times		Communication error	Communication between indoor and outdoor is interrupted	①C-D cable wrongly connected ②Open connection on the C-D cable. ③Interface circuit of indoor/outdoor unit.
▨ □ 10 times		Abnormal power voltage	Abnormal power source is detected.	①Abnormal power source ②Cable is wrongly connected ③Main P.W.B.

12 times	Fan lock error	Outdoor fan actual rpm could not reach as per instructed.	①Outdoor fan motor ②Fan motor circuit.
13 times	EEPROM read error	Microcomputer cannot read the data in EEPROM.	①Main P.W.B.
14 times	ACTIVE CONVERTER defective	Over Voltage is detected by System Power Module	①System Power Module.
Example of blinking (5 times)		: Lights for 0.25 sec at interval of 0.25 sec	

14.8.7 MONO SPLIT (RAC-50/60/70WPA, RAC-50/60/70DPA)

SELF-DIAGNOSIS LIGHTING MODE : LIGHT : BLINK : OFF

LD301 RED	LD302 RED	LD303 RED	LD304 GRN	SELF DIAGNOSIS NAME	DETAIL	MAIN CHECK POINT
				1. **DURING OPERATION**		
		■		Normal Operation	Compressor Operation	Not Malfunction
■		■		Overload (1)	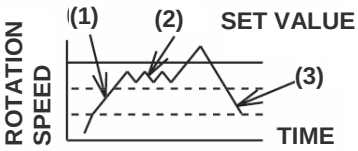	The rotation speed is automatically controlled to protect the compressor in the overload condition. This shows an overload but not malfunction.
	■	■		Overload (2)		
■	■	■		Overload (3)		
Example of blinking (5 times)					: Lights for 0.25 sec at interval of 0.25 sec	
				2. DURING STOP		
				Normal Stop	Indoor Thermostat OFF. Main Operation OFF	Not Malfunction
1 Time				Reset STOP	When stop with Power RESET (Normal when power has been Switched ON)	①P.W.B. (Power Circuit, HIC, ETC)
				Peak Current Cut	Over Current is Detected	①Compressor ②P.W.B.
2 Times						①System Power Module ②P.W.B.
3 Times				Abnormal Low Speed Rotation	Position Detection Signal is not input during operation	①System Power Module ②Compressor ③ P.W.B
4 Times				Switching Failure	Fail to Switch from Initial Low Frequency Sync to Position Detection Signal	①System Power Module ②Compressor ③ P.W.B
5 Times				Overload Lower Limit Cut	Overload protection mechanism is requesting compressor to run at a speed lower than the minimum speed limit	①Outdoor unit is exposed to direct sunlight or its airflow is blocked. ②Fan motor ③Main PWB ④The Voltage is extremely LOW
6 Times				OH thermistor temperature rise	OH thermistor detected compressor overheat	①Leak of refrigerant. ②Compressor ③OH thermistor circuit.
7 Times				Thermistor abnormal	Abnormal thermistor value was detected (Open or Short)	①Thermistor. ②Connection of thermistor defective. ③Thermistor circuit.
8 Times				Acceleration failure	Compressor acceleration was not more that the minimum speed setting.	①Leak of refrigerant. ②Compressor.

9 Times	Communication error	Communication between indoor and outdoor is interrupted	①C-D cable wrongly connected ②Open connection on the C-D cable. ③Interface circuit of indoor/outdoor unit.
10 Times	Abnormal power voltage	Abnormal power source is detected.	①Abnormal power source ②Cable is wrongly connected ③Main P.W.B.
12 Times	Fan lock error	Outdoor fan actual rpm could not reach as per instructed.	①Outdoor fan motor ②Fan motor circuit.
13 Times	EEPROM read error	Microcomputer cannot read the data in EEPROM.	①Main P.W.B.
14 Times	ACTIVE CONVERTER defective	Over Voltage is detected by System Power Module	①System Power Module.
Example of blinking (5 times)			
Lit 1~11 Times	Abnormal Thermistor	Thermistor is opened or shorted. Refer to the table below	①Thermistor ②Connection of Thermistor is faulty ③Thermistor Circuit
Blinking time	Abnormal Thermistor		
1 Time	Overheat Thermistor		
2 Times	Defrost Thermistor		
3 Times	Outdoor Temperature Thermistor		
1 Time	Communication error	Communication between indoor and outdoor is interrupted	①C-D cable wrongly connected ②Open connection on the C-D cable. ③Interface circuit of indoor/outdoor unit.

14.9 CHECKING POWER MODULE

■ Checking power module using tester

Set tester to resistance range (x 100)
If indicator shows high resistance in the following conductivity check, the power module is considered normal. (In case of the digital tester, since builit-in battery is set in reverse direction, ⊕ and ⊖ terminals are reversed).

Caution

However, if the inner circuit of power module is already disconnected (open), the HIGH resistance shown may be misjudged as normal. In this case, please check the resistance by the reversing ⊕ and ⊖ probe polarity against what is shown in the diagram below.and measure again, If is considered normal if the tester shows LOW resistance. Furthermore, compare how the indicator swings at each U, V and W phases. If indicator swings the same way at each terminal, the power module is judged normal

14.9.1 RAC-25NPA, 35NPA, 50NPA & RAM-36NP2A, 53NP2A, 53NP3A, 68NP3A, 70NP4A, 130NP6A

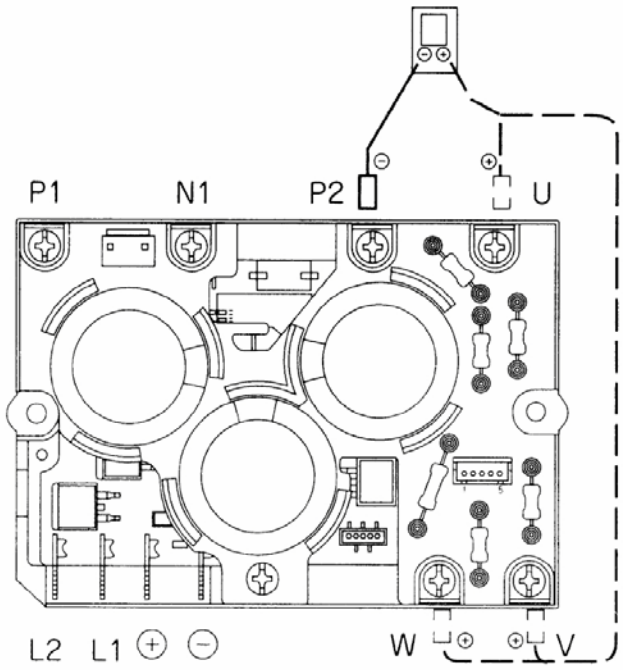

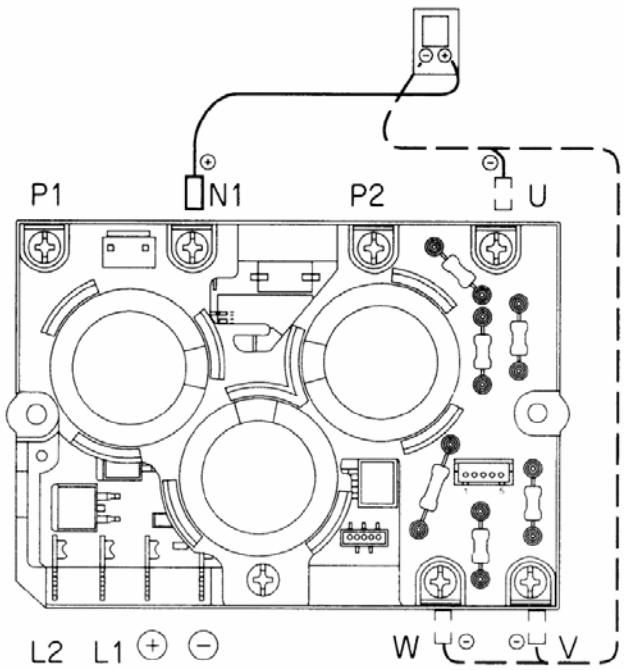

14.9.2 RAM-90NP5A

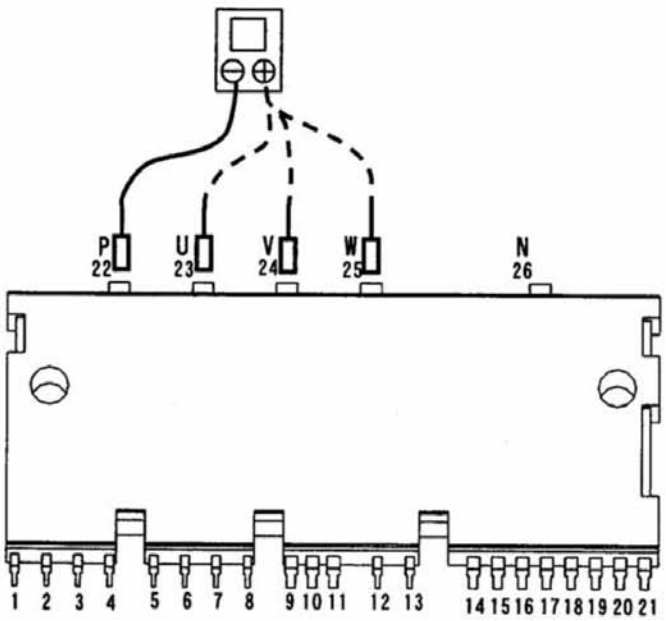

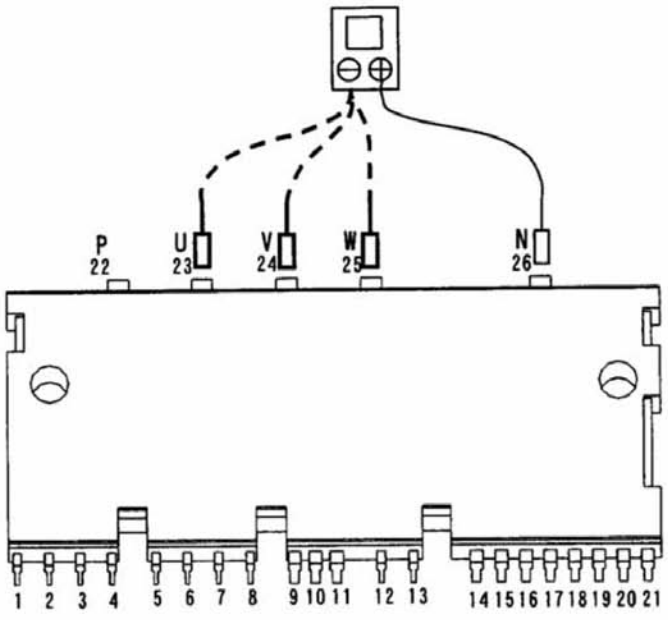

14.9.3 RAC-18/25WPA, RAC-25/35/50WXA, RAC-25/35/50FXA

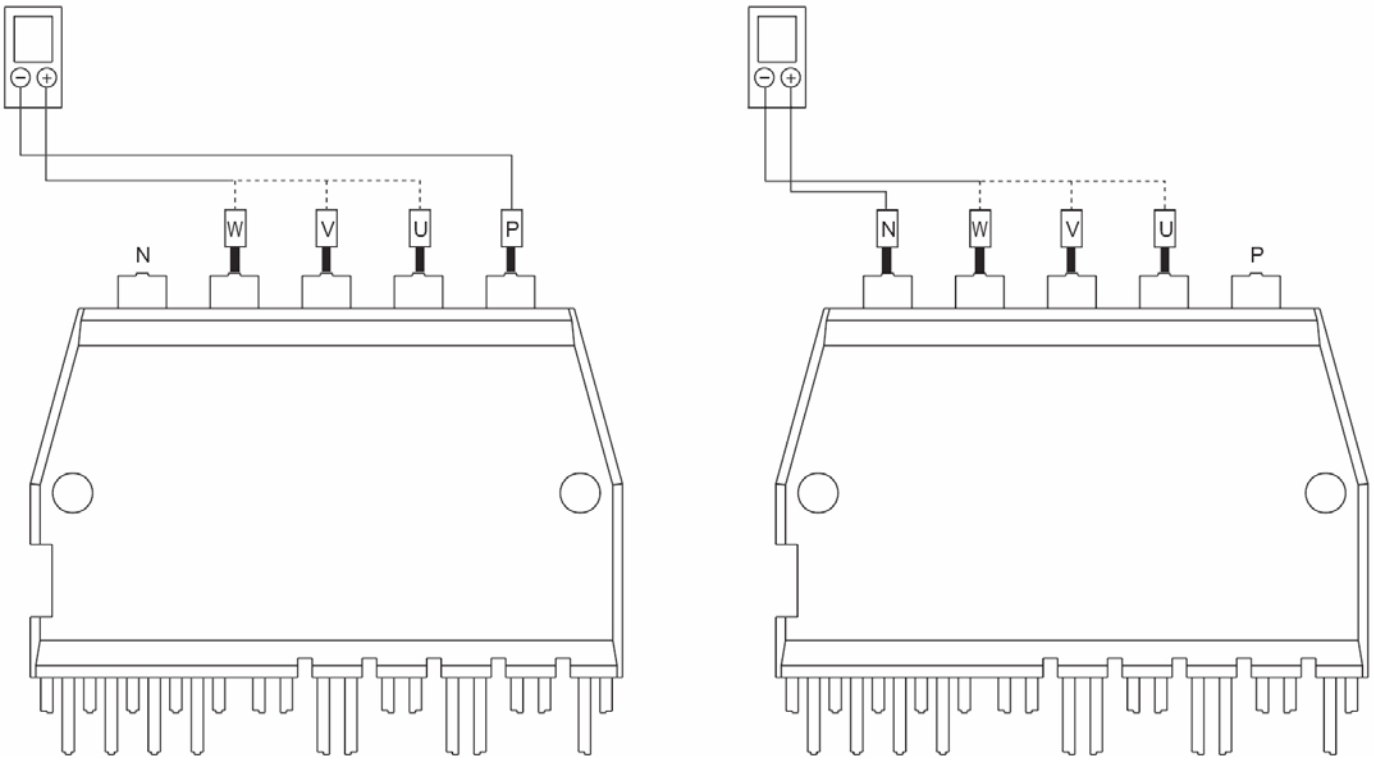

14.9.4 RAC-35WPA

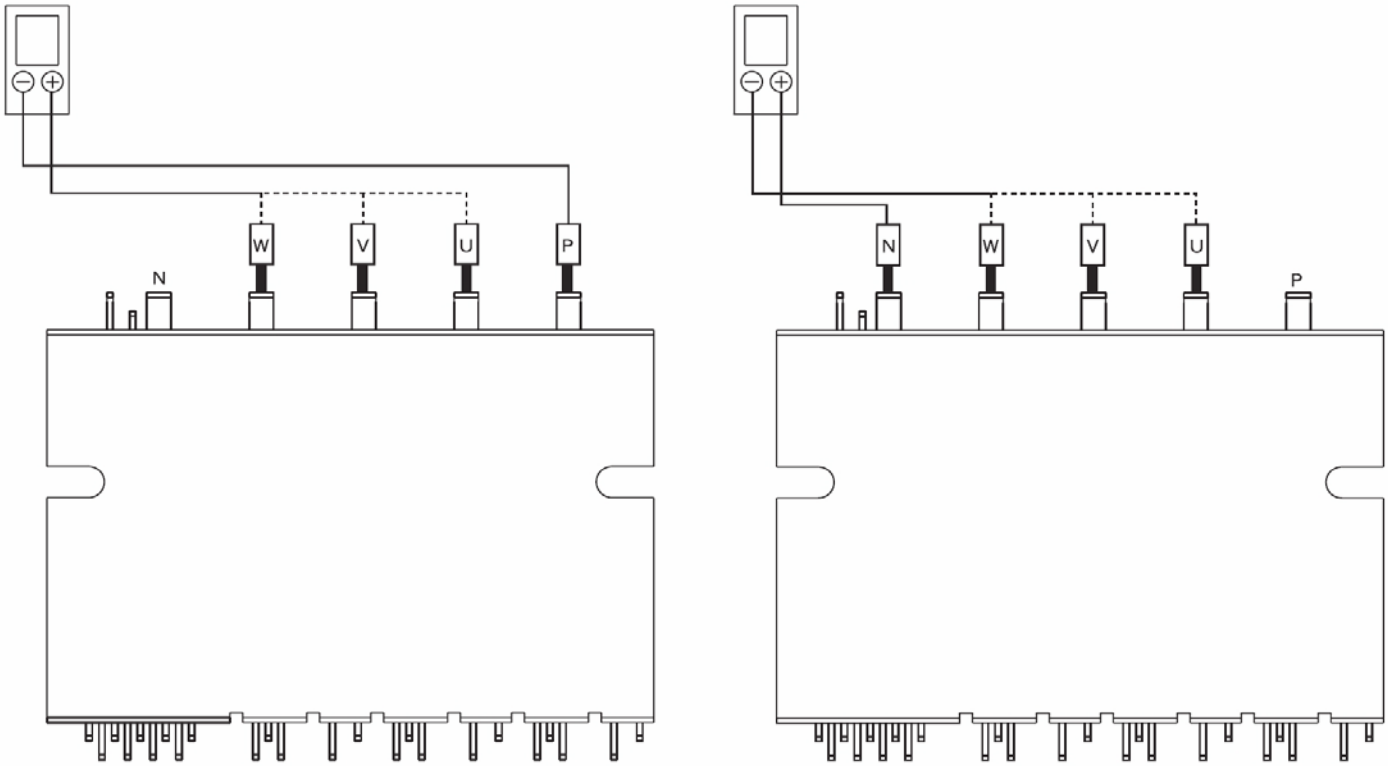

14.9.5 RAC-50/60/70WPA, & RAC-50/60/70DPA

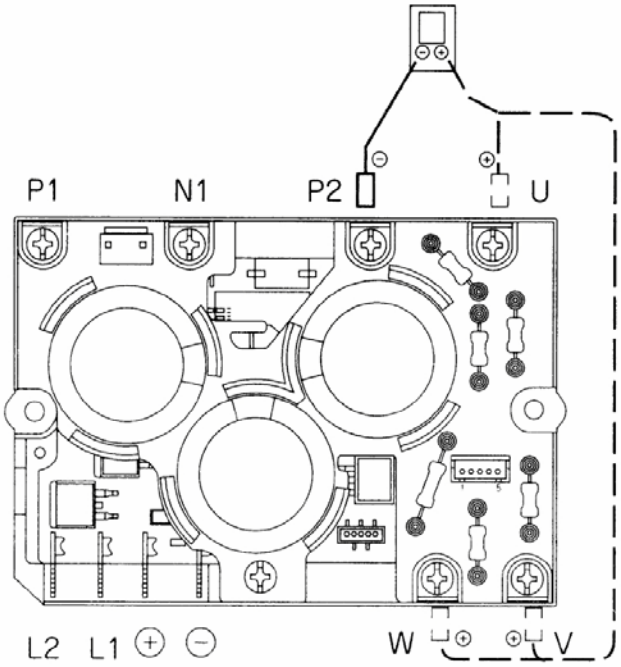

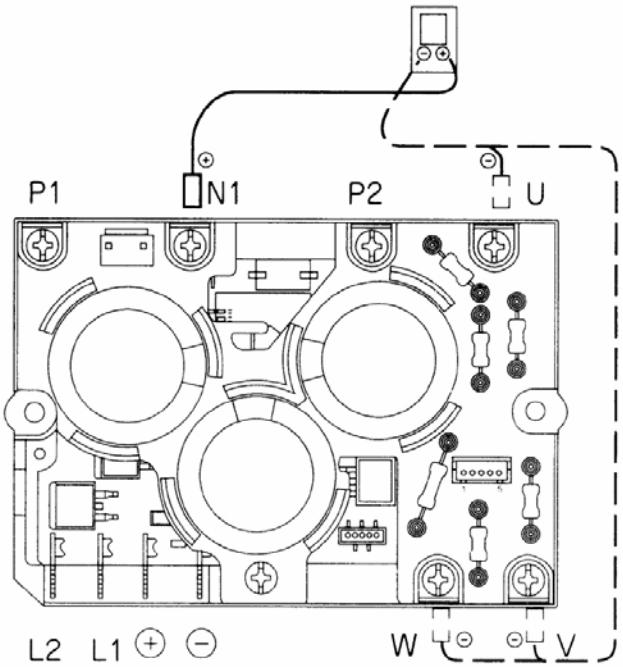

14.10 THERMISTOR

14.10.1 NAME AND ROLE OF EACH THERMISTOR

Name	Connector no.	Measuring point	role
OH thermistor	CN5	Compressor head	If the temperature of the compressor rises abnormally (118°C), the compressor will be stopped. The temperature is used to decide the operation of the valve
DEF thermistor	CN6	Heat exchanger	The thermistor decide the defrost operation during heating combine the data of the outside temperature and its data
Outdoor temperature thermistor	CN7	Outside temperature	Outdoor temperature is used to decide the various operation of the air conditioner
Electrical Expansion valve thermistor (narrow pipe 1)	CN8	Indoor unit (narrow pipe 1)	The thermistors detect the temperature of the piping to the indoor units. The temperature are used to decide how much the expansion valve is opened
Electrical Expansion valve thermistor (narrow pipe 2)		Indoor unit (narrow pipe 2)	
Electrical Expansion valve thermistor (narrow pipe 3) *		Indoor unit (narrow pipe 3)	
Electrical Expansion valve thermistor (narrow pipe 4) *		Indoor unit (narrow pipe 4)	
Electrical Expansion valve thermistor (wide pipe 1)	CN9	Indoor unit (wide pipe 1)	
Electrical Expansion valve thermistor (wide pipe 2)		Indoor unit (wide pipe 2)	
Electrical Expansion valve thermistor (wide pipe 3) *		Indoor unit (wide pipe 3)	
Electrical Expansion valve thermistor (wide pipe 4) *		Indoor unit (wide pipe 4)	

"*" Starmark is applicable to respective models only

14.10.2 REFERENCE VALUE FOR THERMISTOR'S RESISTANCE AND TEMPERATURE

Electrical expansion valve thermistor	Temperature	Resistance	Microcomputer pin potential
DEF thermistor	-15°C	12.6kΩ	1.0V
	0°C	6.1 kΩ	1.7V
	25°C	2.2 kΩ	3.0V
	50 °C	860 Ω	3.9V
	75°C	400 Ω	4.4V
Outdoor temperature thermistor	-15°C	12.6kΩ	1.0V
	0°C	6.1 kΩ	1.7V
	15°C	3.2 kΩ	2.4V
	30 °C	2 kΩ	3.1V
OH thermistor	25 °C	33.9 kΩ	0.5V
	50 °C	10.8 kΩ	1.3V
	75 °C	4.1 kΩ	2.4V
	100 °C	1.7 kΩ	3.4V
	105 °C	1.5 kΩ	3.6V
	118 °C	1 kΩ	3.9V

NOTE:
The table shows the corresponding reference value between thermistor's resistance and the temperature. The value stated in the table might be slightly differ from measured value, depending on the measuring instrument.

When measuring the resistance, pull out the connector after turning off the power supply to avoid voltage leak.

WARNING:
Pulling out the connector while the power supply is turn on will cause electrical shock, leak of current or burn of measuring instrument.

14.10.3 MONOZONE OUTDOOR

RAC-25NPA, RAC-35NPA, RAC-50NPA

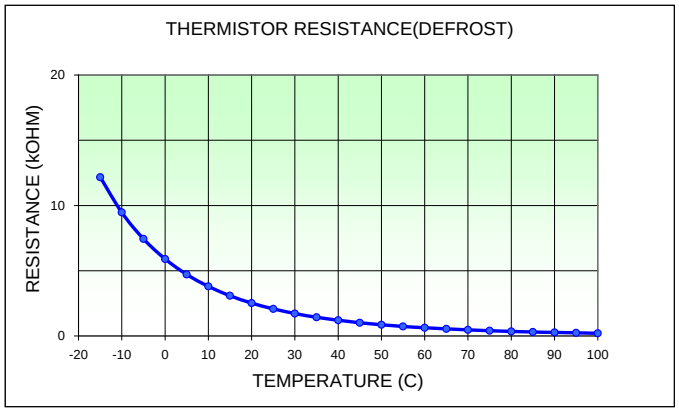

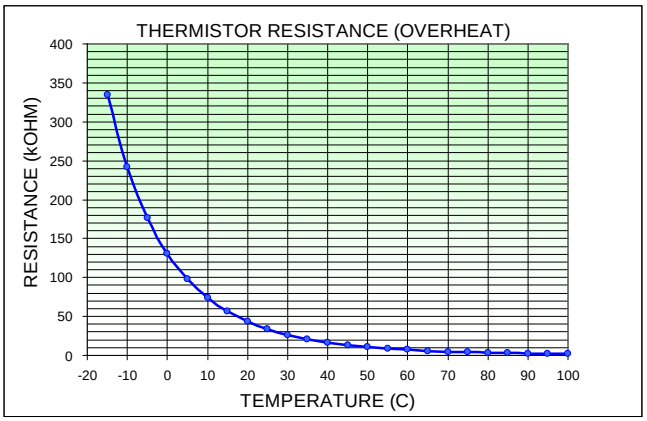

Multizone Outdoor

RAM-36NP2A, RAM-53NP2A, RAM-53NP3A, RAM-68NP3A, RAM-70NP4A, RAM-90NP5A, RAM-130NP6A

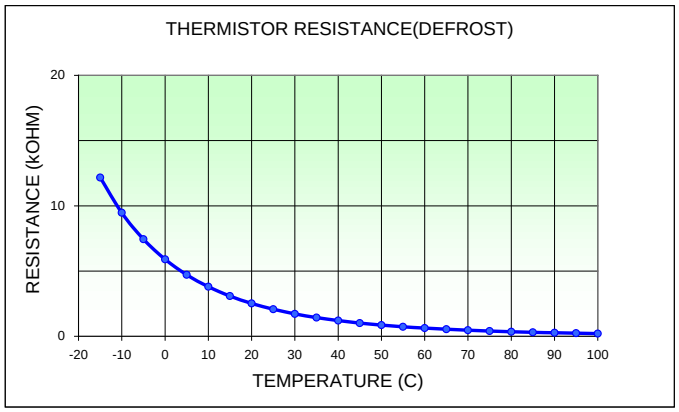

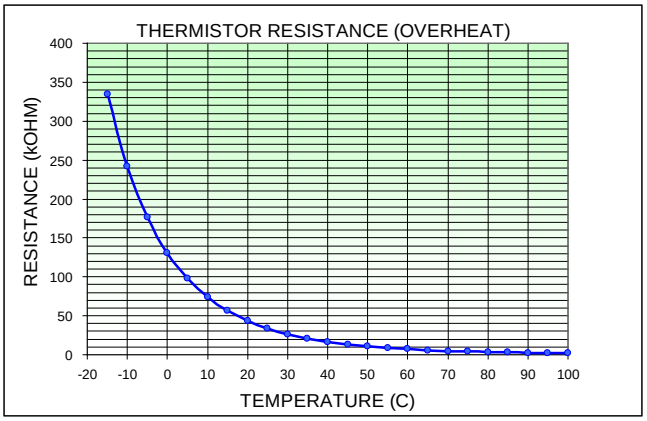

Mono/Multi Indoor

RAK-18QPA, RAK-25QPA, RAK-35QPA, RAK-50QPA
RAK-18QXA, RAK-25QXA, RAK-35QXA, RAK-50QXA

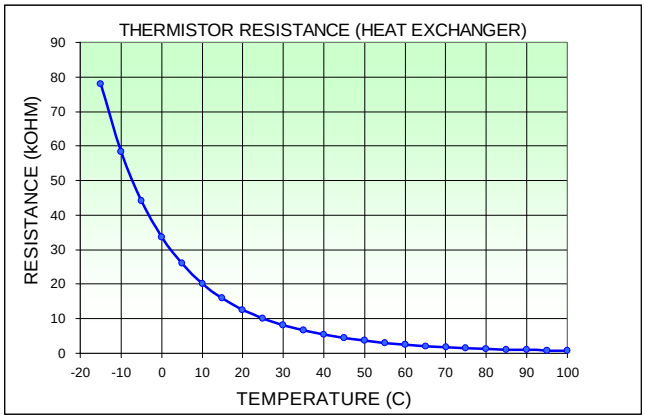

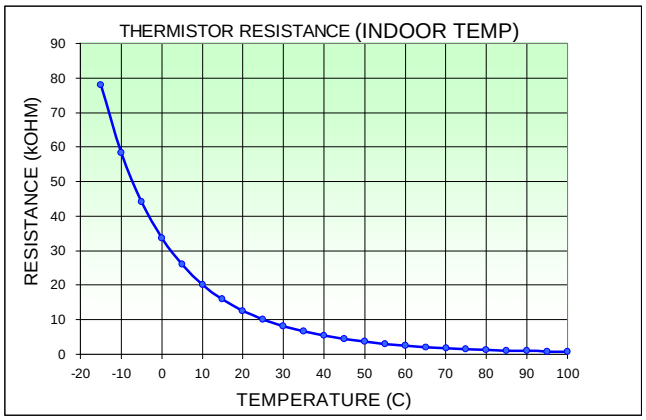

RAI-25RPA, RAI-35RPA, RAI-50RPA

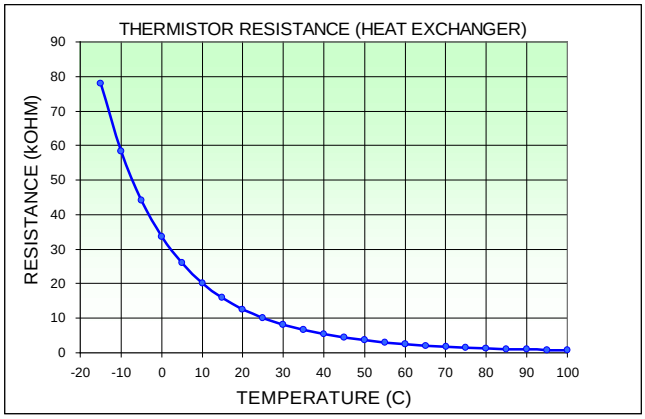

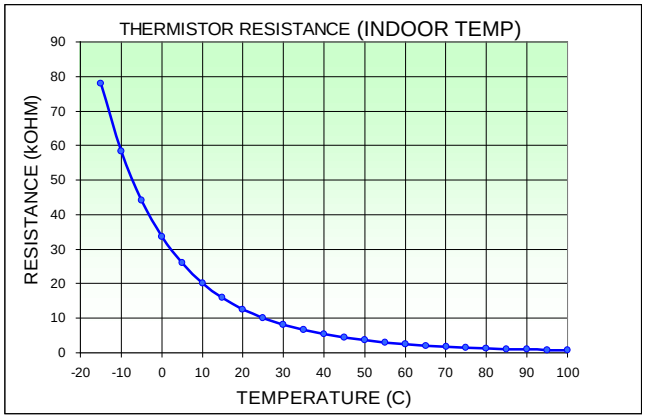

RAD-18RPA, RAD-25RPA, RAD-35RPA, RAD-50RPA

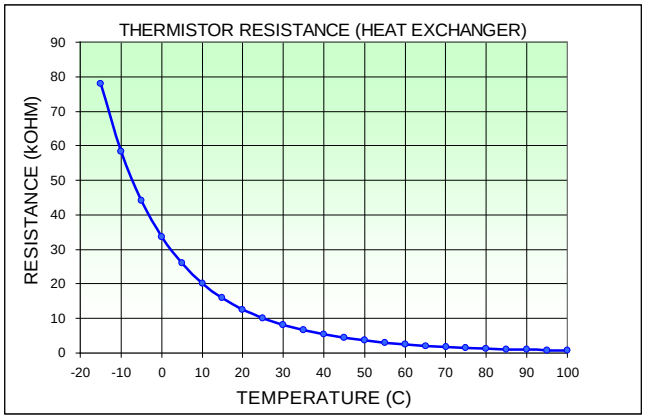

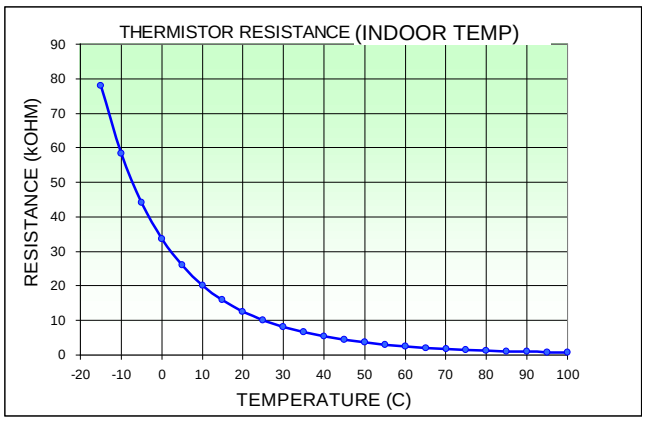

RAF-25QXA, RAF-35QXA, RAF-50QXA
RAF-25RPA, RAF-35RPA, RAF-50RPA

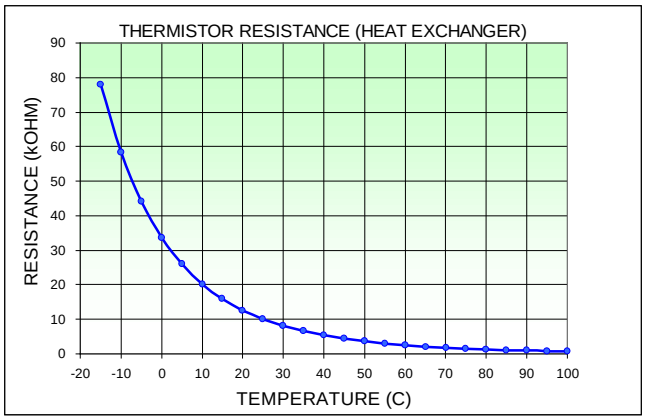

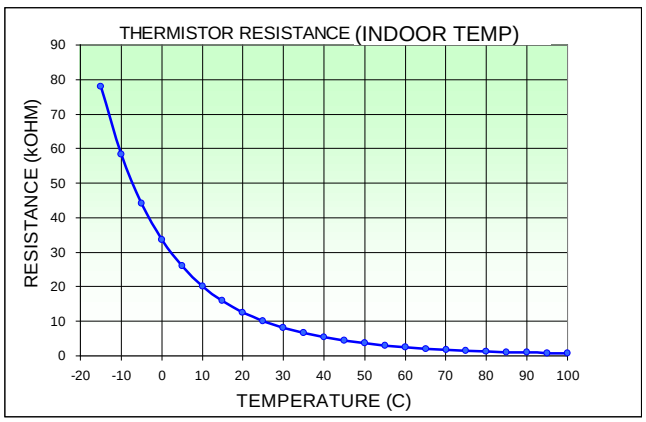

MONO SPLIT Outdoor

RAC-18WPA, RAC-25WPA, RAC-35WPA

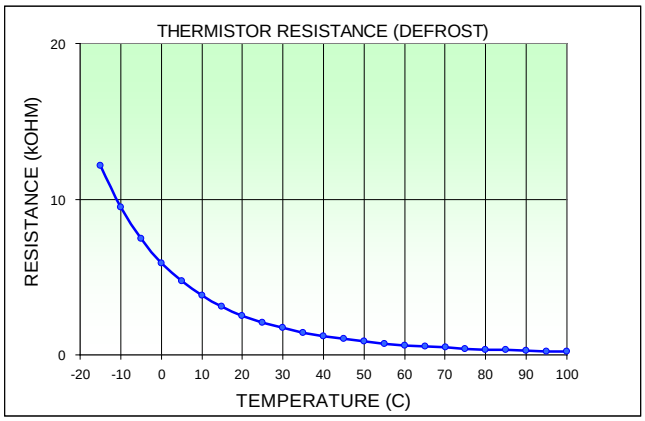

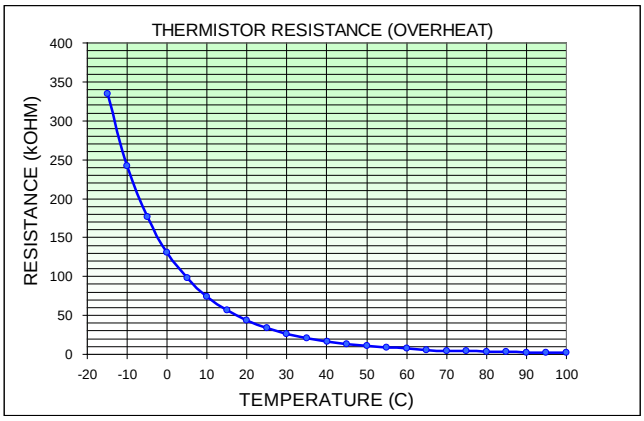

RAC-18WSA, RAC-25WSA, RAC-35WSA
RAC-25WXA, RAC-35WXA, RAC-50WXA
RAC-25FXA, RAC-35FXA, RAC-50FXA

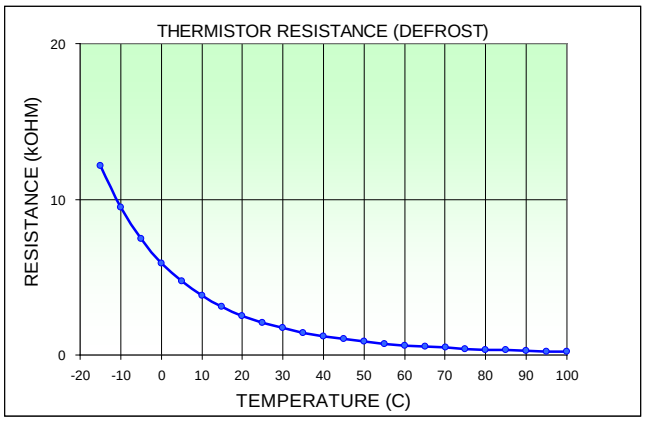

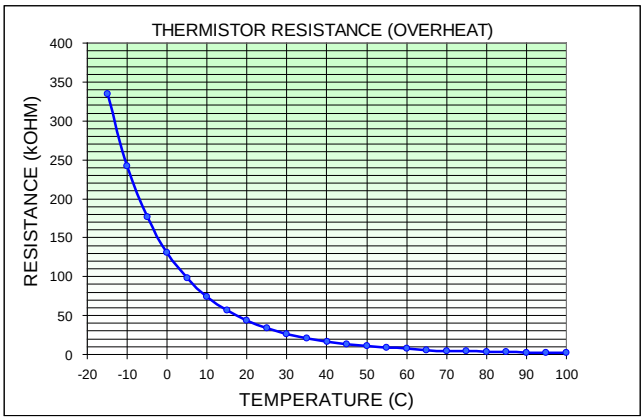

RAC-50WPA, RAC-60WPA, RAC-70WPA

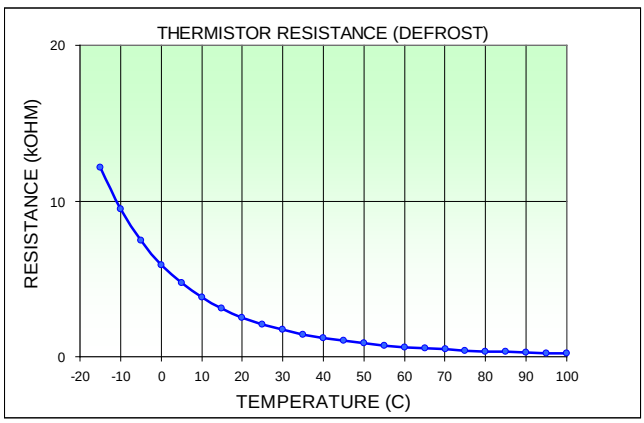

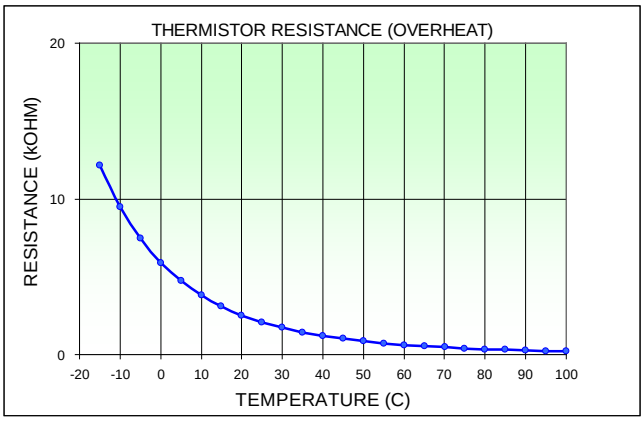

RAC-50DPA, RAC-60DPA, RAC-70DPA

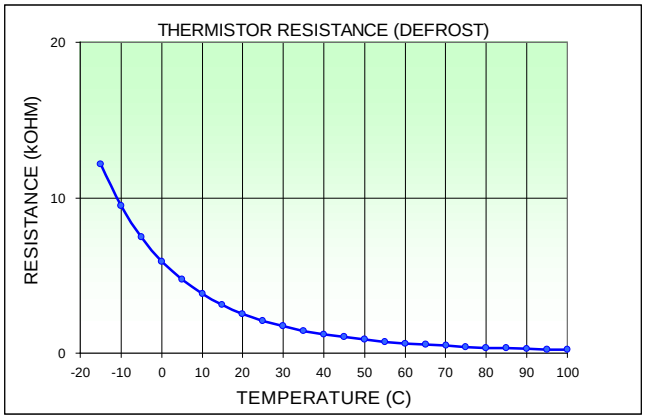

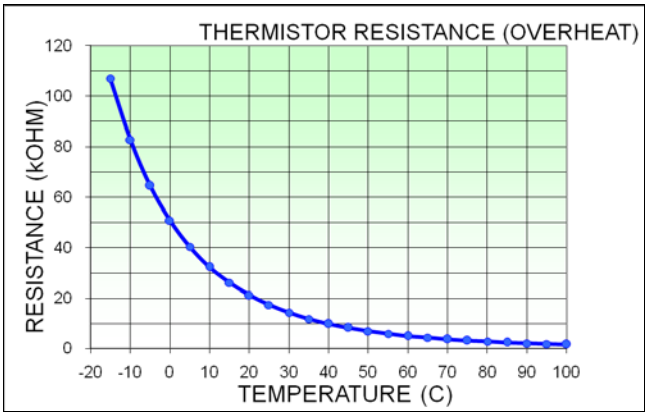

RAC-25FPA, RAC-35FPA, RAC-50FPA

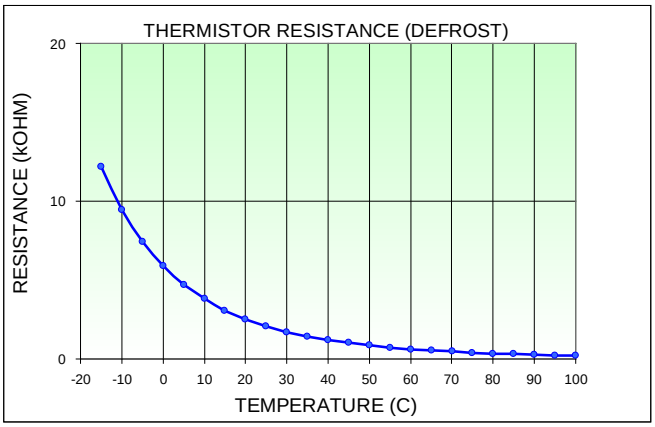

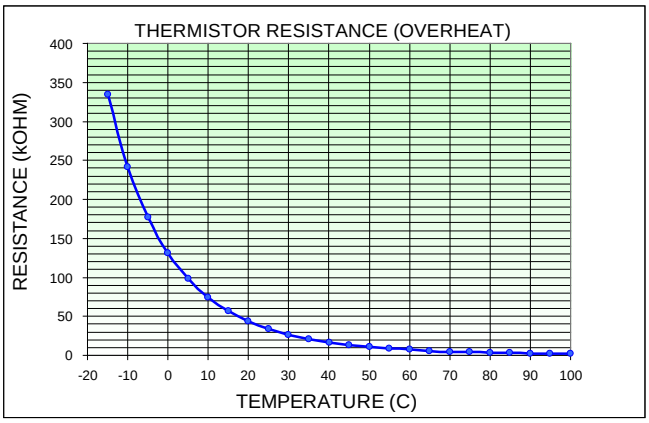

MONO SPLIT Indoor

RAK-18PSA, RAK-25PSA, RAK-35PSA

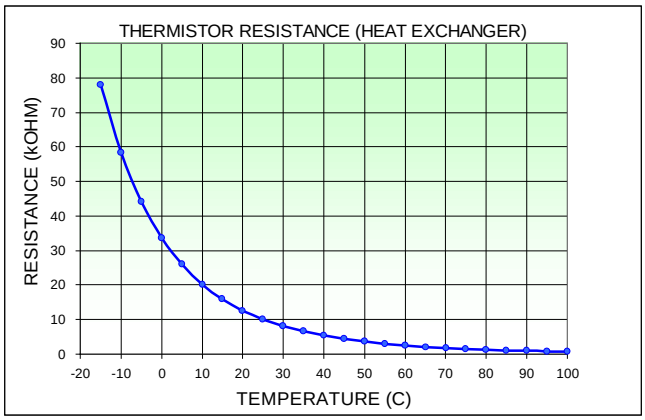

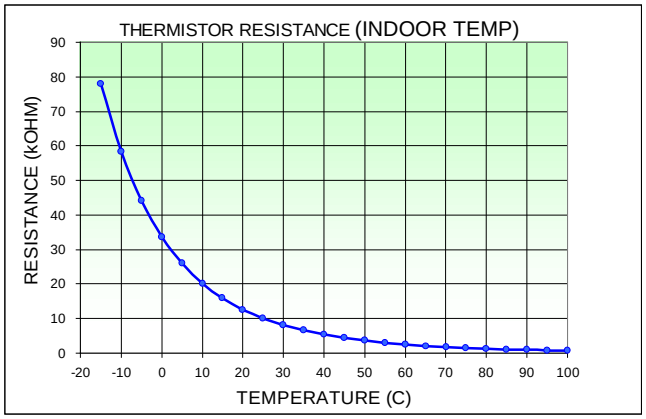

RAK-18PPA, RAK-25PPA, RAK-35PPA, RAK-50PPA ,RAK-60PPA, RAK-70PPA
RAK-25WXA, RAK-35WXA. RAK-50WXA

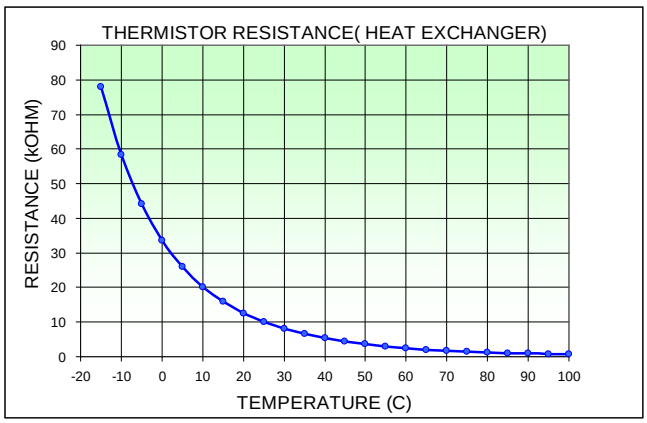

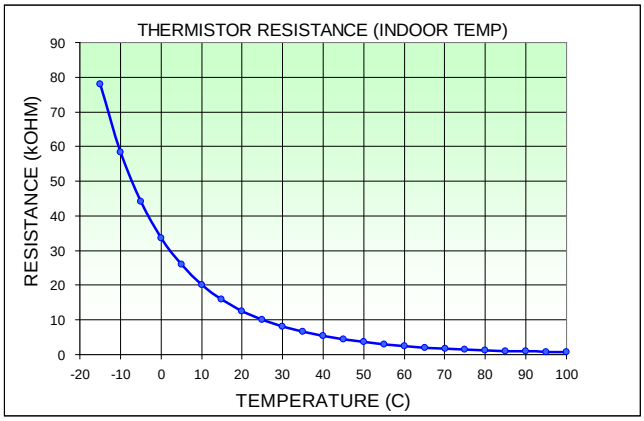

RAD-50PPA, RAD-60PPA, RAD-70PPA

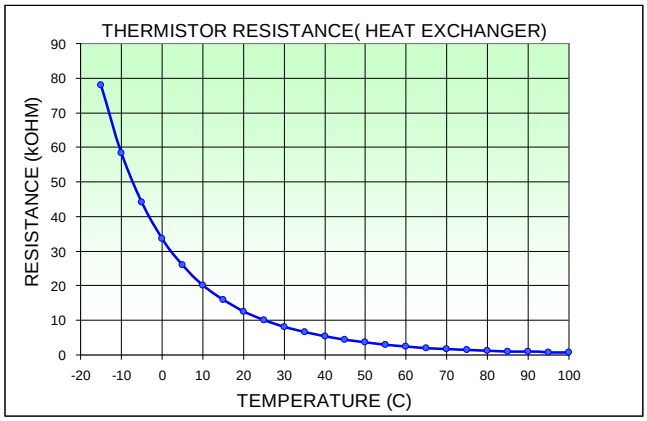

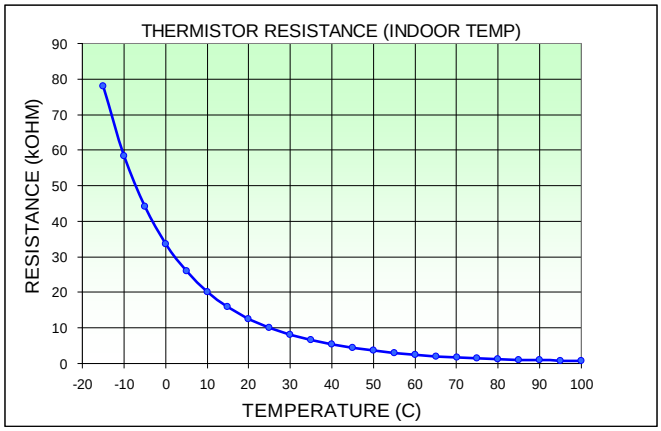

RAF-25PXA, RAF-35PXA, RAF-50PPA

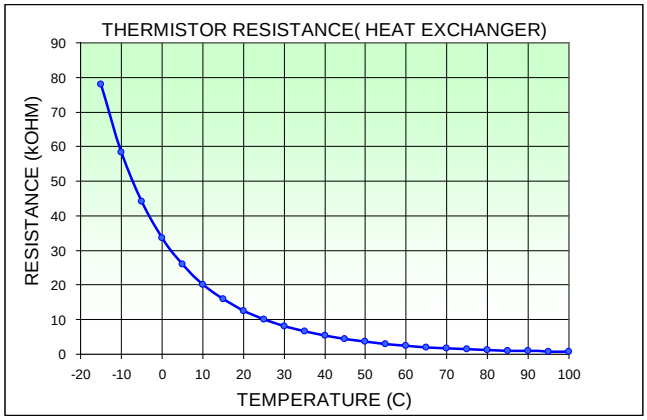

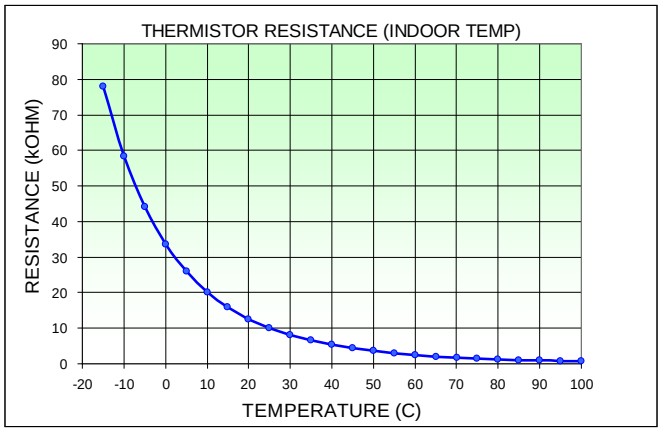

LED lighting mode		Troubled thermistor	Judgement	
LD301	LD302		Open	Short
light	1 blink	OH thermistor	0.04V or less	4.96V or more
Light	2 blinks	DEF thermistor	0.04V or less	4.94V or more
Light	3 blinks	Outdoor temperature thermistor		
Light	4 blinks	Electrical expansion valve thermistor (thin pipe 1)		
Light	5 blinks	Electrical expansion valve thermistor (thick pipe 1)		
Light	6 blinks	Electrical expansion valve thermistor (thin pipe 2)		
Light	7 blinks	Electrical expansion valve thermistor (thick pipe 2)		
Light	8 blinks	Electrical expansion valve thermistor (thin pipe 3)	0.04 or less	4.94 or more
Light	9 blinks	Electrical expansion valve thermistor (thick pipe 3)		

15 MISCELLANEOUS NOTE

CONTENTS

15 MISCELLANEOUS NOTE 15-1
15.1. INSTALLATION AT COLD REGIONS OR SNOWFALL REGIONS. 15-2
15.2. INSTALLATION POINTS ON OUTDOOR UNITS IN COLD OR SNOWFALL REGIONS. 15-2
15.2.1. Installation place of Cold and Snowfall Regions 15-2
15.2.2. Considerations to the Seasonal Winds and Snowfall 15-2
15.2.3. Considerations to Snowfall / Snow Buildup 15-3
15.2.4. Considerations to Sliding Snow from Roof or SNOWFALL 15-4
15.2.5. As to Proper Drainage of Defrosting WATER 15-5
15.2.6. Request to cut Net attached to Rear side of Outdoor Unit 15-5
15.2.7. Installation of HOT PIPE 15-5
15.3. H-LINK ADAPTOR 15-7
15.3.1. Safety summary 15-7
15.3.2. Installation WORK 15-7
15.3.3. Electrical Wiring 15-8
15.3.4. DIP switch setting 15-9
15.3.5. TEST RUN 15-10

15.1. INSTALLATION AT COLD REGIONS OR SNOWFALL REGIONS.

Snowy district reports that even the powerful PAM air conditioner is difficult to warm in the following situations.
The outdoor unit is buried in snow

- Snow stuck to the sides or the air inlet (rear side) of the outdoor. Therefore, only the snow around the heat exchanger can be melted by the defrost operation.
- Water from defrost operation is frozen at the base of the outdoor unit.

15.2. INSTALLATION POINTS ON OUTDOOR UNITS IN COLD OR SNOWFALL REGIONS.

When the outdoor unit is installed at cold regions, please install at places where there is less impact from the snow or seasonal wind.

– *With the powerful PAM air conditioner, it is still difficult to provide sufficient heating if the outdoor unit is exposed to heavy snow piles and cold seasonal wind blow. Therefore, to enable effective heating performance, it is important to ensure the outdoor unit is installed at a location where heat could be gathered and where exposure to seasonal wind is minimal.*

15.2.1. INSTALLATION PLACE OF COLD AND SNOWFALL REGIONS

- The outdoor unit should not be installed at the places where the cold seasonal wind is blowing directly from the north or west side of a building.
- Please install at the east or south side of a building where enhanced heating efficiency and less influence of seasonal winds and easy to collect heat

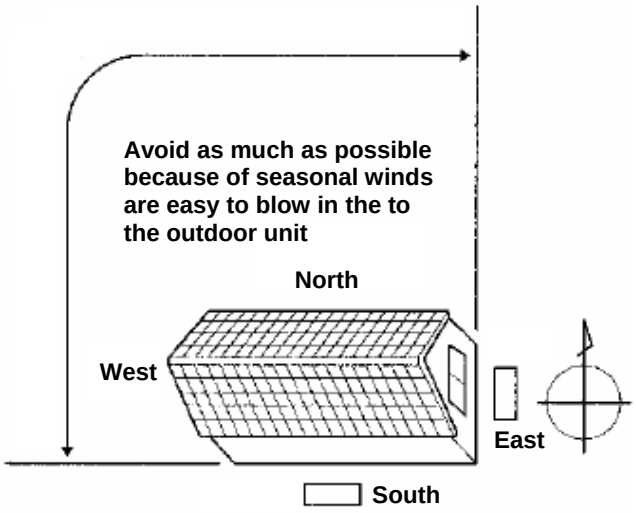

15.2.2. CONSIDERATIONS TO THE SEASONAL WINDS AND SNOWFALL

- When snow blows into the outdoor unit from the side, it becomes easy to stick snow and difficult to collect heat
- Please fix the snowstorm guard against wind or snow in order not to blow directly into the outdoor unit

Snow will stuck to the outdoor unit caused by seasonal wind

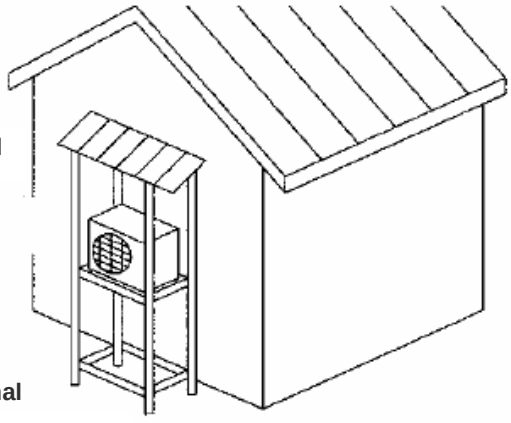

- Examples of snowstorm guard

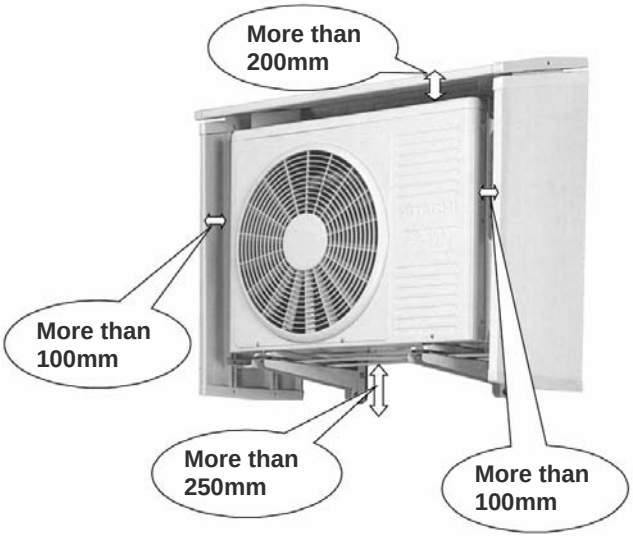

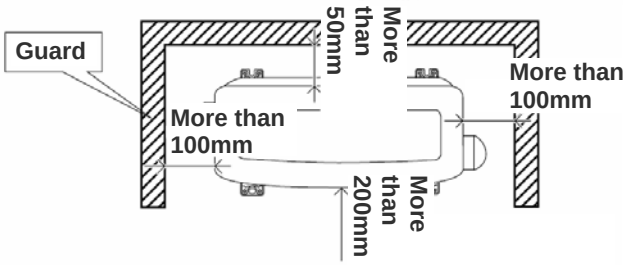

15.2.3. CONSIDERATIONS TO SNOWFALL / SNOW BUILDUP

- When the outdoor unit is to be placed where there is heavy snow accumulation, please install at the high wall position by using a high-rack or metal fittings to wall.
- To protect against falling snow, please install under the eaves of the building.

In case of ground installation

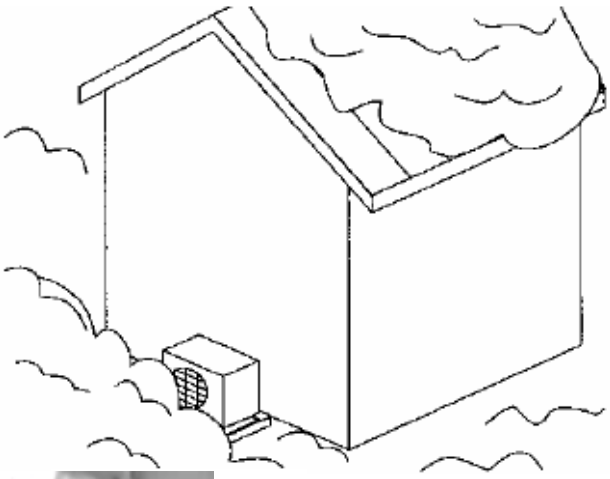

In case of installed on the ground, the outdoor unit may be covered with snow.

To be installed at high position as much has possible

Use a high-rack and attach the snowstorm guard additionally.

In case of installing on the second storey

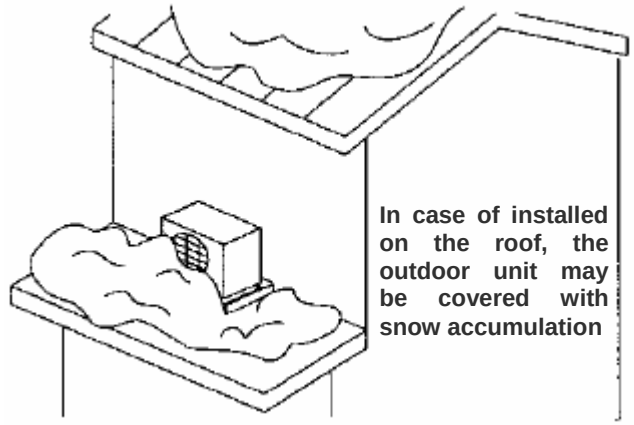

In case of installed on the roof, the outdoor unit may be covered with snow accumulation

Mount the unit in a high position on a wall

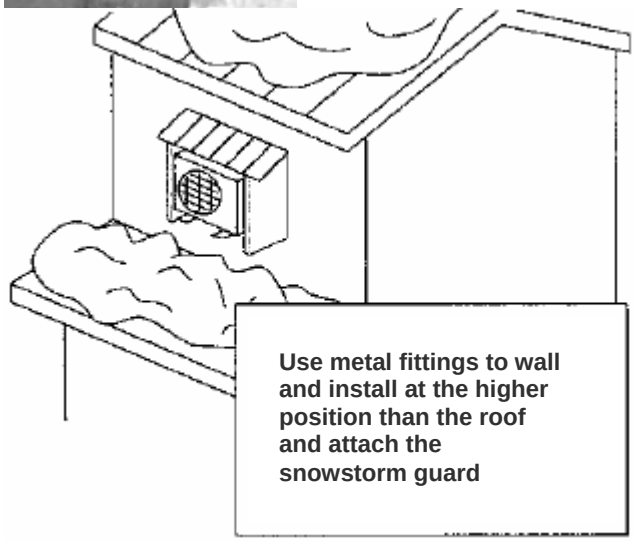

Use metal fittings to wall and install at the higher position than the roof and attach the snowstorm guard

CAUTION:

– *If the distance between the outdoor unit and the wall is too close, the place between the rear side (heat exchanger) and he wall may become a snow accumulation.*

– *The distance between the outdoor unit and the wall should be more than 100mm, and are attached with snowstorm guard.*

15.2.4. CONSIDERATIONS TO SLIDING SNOW FROM ROOF OR SNOWFALL

- Please install the outdoor unit at the places that are not exposed to snow sliding off from the roof or snow fall.
- Please install the snow storm guard to prevent the outdoor unit from exposing directly to the melting snow water or rain water.

If the outdoor unit is installed under the short eaves, the melted snow water or rainwater may enter directly into the outdoor unit.

If the outdoor unit is installed at the place where the snow may slide from the above roof, the outdoor unit will be covered with snow.

At the places where possibilities of melted snow water or snow sliding off from roof

Please install at the place where melted snow water do not drop from the roof and fix the snowstorm guard.

Please install at the high position where it is not covered with snow by using metal fittings to wall and attach the snowstorm guard

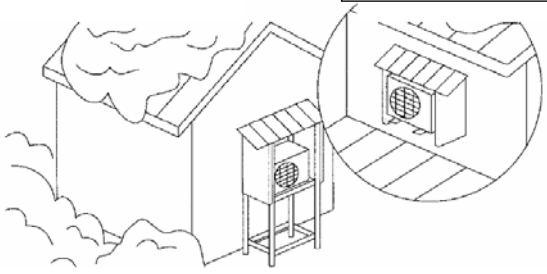

15.2.5. AS TO PROPER DRAINAGE OF DEFROSTING WATER

- At cold districts, there is a possibility that drainage can not be done due to freezing the defrosting water on the base surface. Therefore, please remove the drain pipes attached to the bottom of the outdoor unit and the bushes. If any, install at places where the defrosting water can flow smoothly.
- The drainage holes will be covered by icicles which produced by the defrosting water from the bottom. Therefore please mount the unit at least 250mm from the eaves and so on.

To make better drainage from bottom face of the outdoor unit

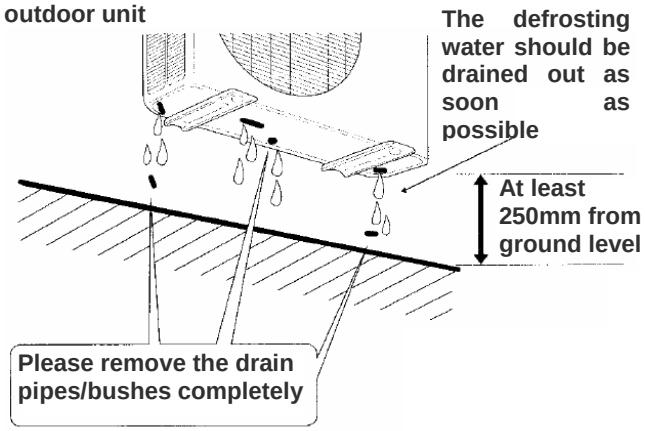

CAUTION:

– *Drainage of the defrosting water by connecting the drain pipe will cause freezing. Do not do it.*

– *If the bushes are not removed, the defrosting water will be frozen at the base of the heat exchanger. This causes heating capacity to drop and abnormal noise operation.*

– *If the blocks of the plastic block racks are used, the drainage hole at the base bottom may be blocked or covered with icicles (frozen water from defrost). Do not do it.*

Ensure enough clearance at the ground when installing the unit so the water could drain out smoothly.

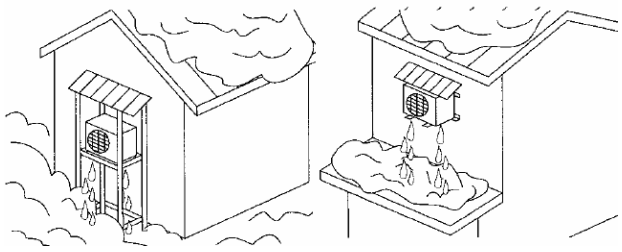

Installation using high position racks

Installation using metal fittings on wall

15.2.6. REQUEST TO CUT NET ATTACHED TO REAR SIDE OF OUTDOOR UNIT

At the places, where snow enters into the air inlet, the net at the rear side will lead to easy snow accumulation. Moreover, only the snow around the heat exchanger may be melted during defrosting whereas snow that attached to the net will remain stuck and not melt. Therefore, please cut the net at the rear after installation.

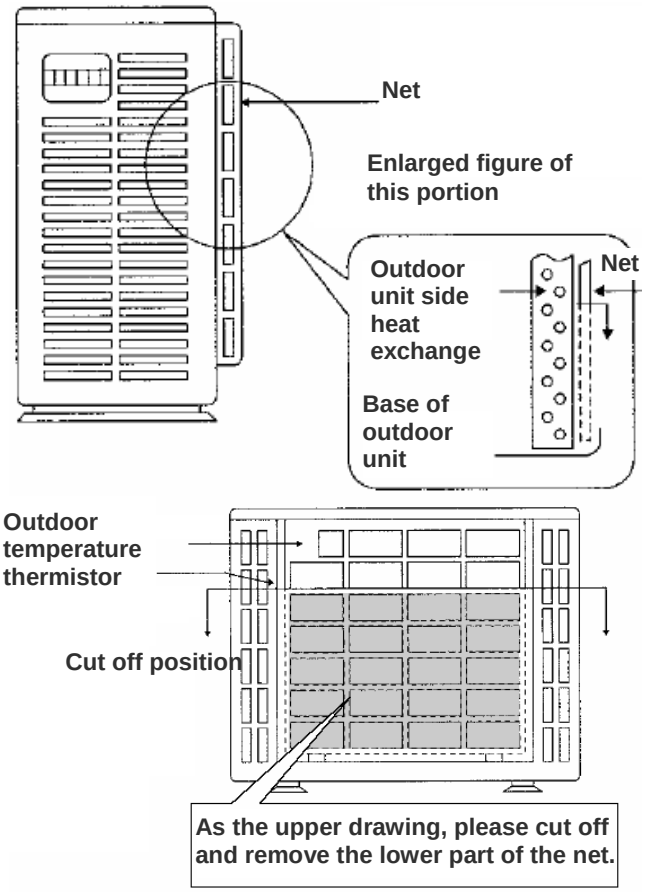

15.2.7. INSTALLATION OF HOT PIPE

At places where the temperature is low, water from defrost can freeze easily and is impossible to drain out from the base bottom. The Hot-pipe is to be used so that the drainage holes will not be blocked.

NOTE:

– *No responsibility is accepted for any form of use other than the designated applications.*

– *Heating and cooling capability may be slightly affected by the use of the hot pipe.*

– *Time taken to heat and cool may be slightly longer when the hot pipe is used.*

1. Turn off the circuit breaker and remove the connecting cord.
2. Remove the attached pipes from the service valve.
3. Remove external parts as show in below figure.

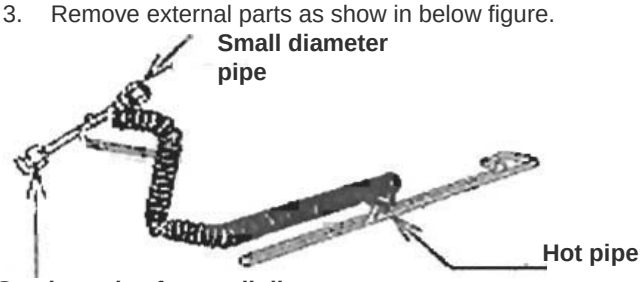

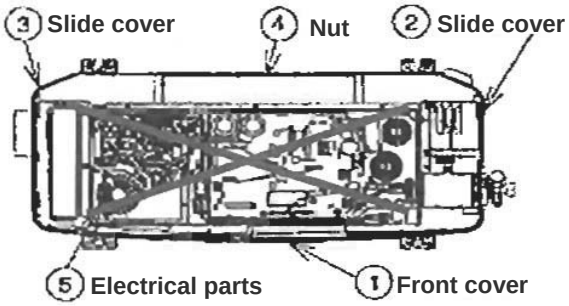

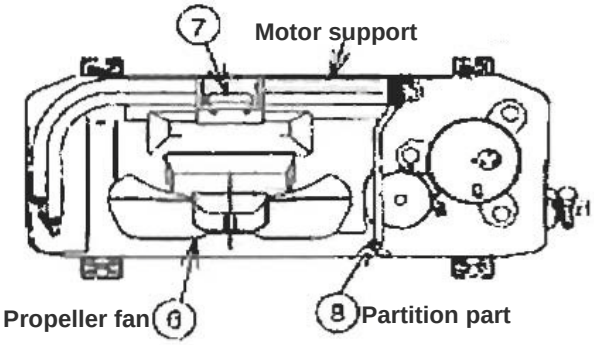

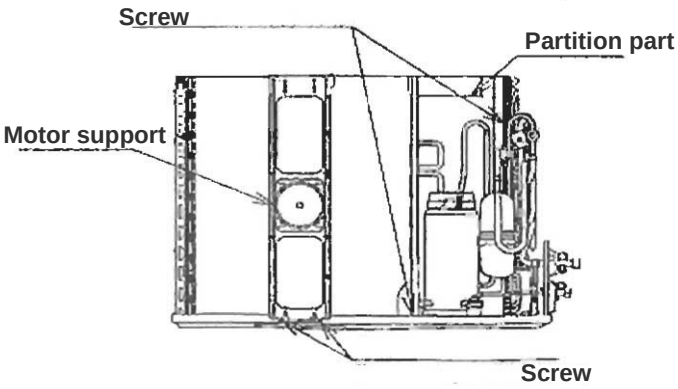

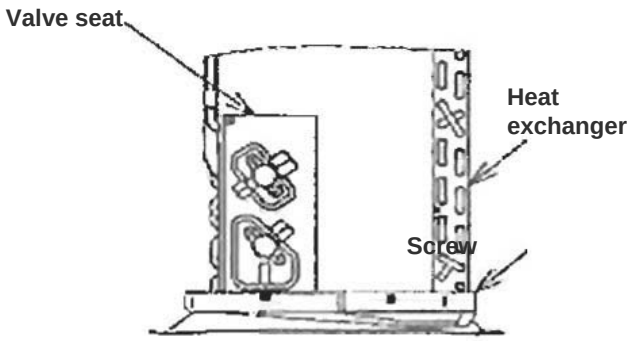

4. Remove the bushing that is attached to the base.
5. Remove the securing screw of the heat exchanger.
6. Lift up the heat exchanger and create a gap of approximately 10mm between the base and the lower surface of the heat exchanger.

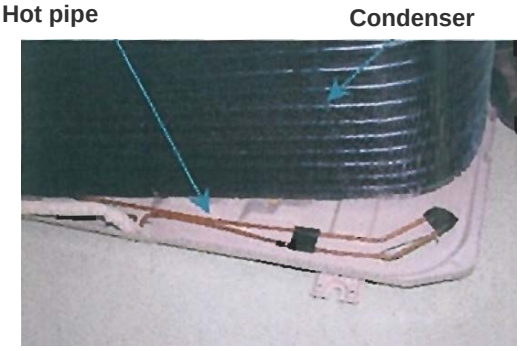

7. Insert the hot pipe into the top of the base from the gap.

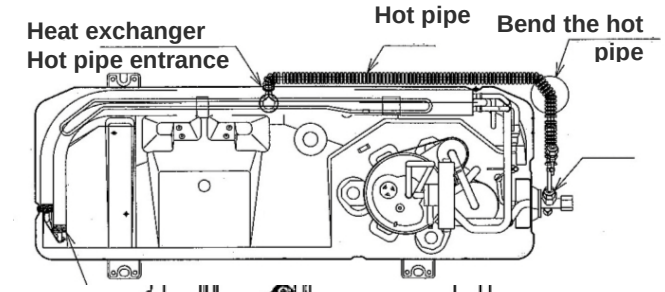

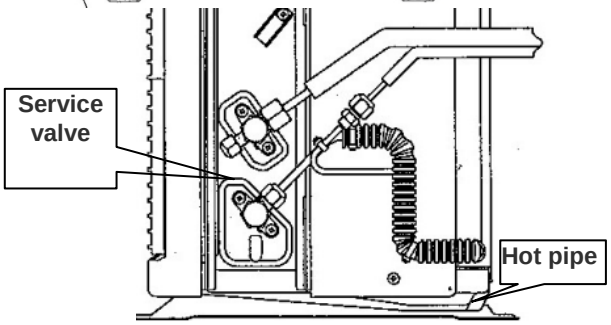

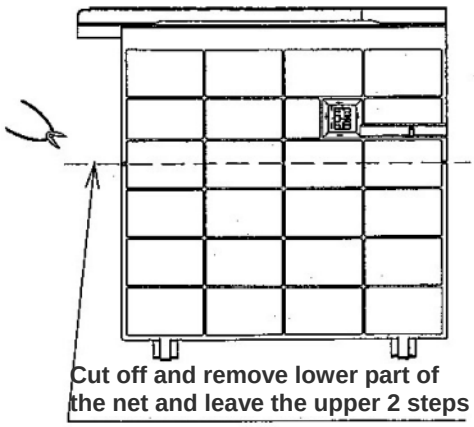

8. Return the heat exchanger to the original position, and fasten the screws. Bend the hot pipe so that the flare nut is approximately 10cm from the service valve.
9. The net at the rear side will accelerate snow accumulation. The snow on the net may not defrost even by defrosting from the heat exchanger. Therefore, cutting the net and reassemble all removed parts in step 3.
10. Connect the pipes and the hot pipe between the smaller side service valve and the smaller pipe. Adjust the length of the smaller pipe by cutting off the excess.
11. Connect the connecting cord to the terminal board.
12. Vacuum the air inside the system.
13. Check for gas leakage at the service valve.
14. Perform test to make sure the unit is operating correctly before reinstalling the unit.

Applicable models	Hot-pipe part #
RAC-35WPA	RAC-25YH4 500

15.3. H-LINK ADAPTOR

15.3.1. SAFETY SUMMARY

DANGER:

– *DO NOT pour water into the remote control switch (hereafter called "controller"). This product is equipped with electrical parts. This will cause serious electrical shock.*

WARNING:

– *DO NOT perform installation work and electrical wiring connection by yourself. Contact your distributor or dealer of HITACHI and ask then for installation work and electrical wiring by service person. The specified cable should be used to connect (i) room air conditioner and adaptor, and (ii) controller and adaptor.*

CAUTION:

– *DO NOT install the indoor unit, outdoor unit, controller and cable as such places as:*
  – *where there is oil vapor and dispersion of oil*
  – *where there is sulfuric environment (near the hot springs)*
  – *where there is a flammable gas*
  – *where there is salty environment (near the sea)*
– *DO NOT install the indoor unit, outdoor unit, controller an cable within approximately 3 meters form strong electromagnetic wave radiators, such as medical equipment. In case that the controller is installed in a place where there is electromagnetic wave direct-radiation, shield the controller and cables by covering with the steel box and running the cable through the metal conduit tube.*
– *In case that there is electric noise at the power source for the indoor unit, provide a noise filter.*

15.3.2. INSTALLATION WORK

■ Before installation

Check the contents and the number of the accessories in the packing.

Adaptor	**With two 1.8m cables**
1 piece of cover for hiding the covering	**Attached 2 sided tapes** 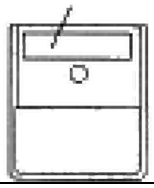
Two-sided tape for attaching to Adaptor	**110x40x3mm**
2 connectors for H-Link connection	
2 tapping screws for attaching to wall	**ϕ3.0 x 10mm**
2 screws for attaching to wooden wall	**ϕ3.1 x 16mm**

1) RAC adaptor can be installed to the wall as well as on the air conditioner itself
2) Install RAC adaptor in the vertical surface as shown below.

Upper side

Mark "⇧ UP"

Wiring outlet

Bottom side

3) Installation procedure
   a) When installing to the wall.
      i) Fix the adaptor with 2 screws. Tapping screw is for metal surface, and other screw is for wooden surface.

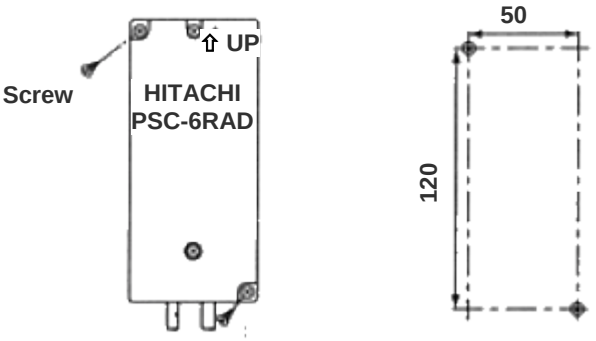

      ii) When using the cover
      It can be installed at the right and left side of room air conditioner. Fix the cover and RAC adaptor with the two-sided tape (accessory).

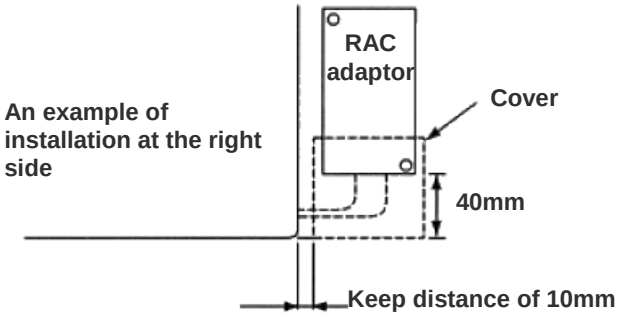

b) When installing on the room air-conditioner
In case that it cannot be installed to the wall due to the space or material problem, install the RAC adaptor with the two-sided tape (accessory) on the room air-conditioner.
   i) Confirm if the piping cover of the unit can be removed when performing the service maintenance, and then fix the RAC adaptor in the side of room air-conditioner with two-sided tape. (Available at the right as well as left side)
   ii) Clean the surface to be installed with a dry cloth.

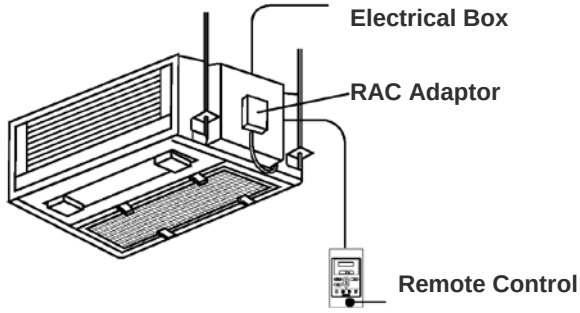

NOTE:
- *Consider the following points since the adhesiveness changes according to the environmental conditions (temperature, humidity etc)*
- *The adhesiveness is decreased when there is humidity or oil.*
- *Warm the adhesive part and installation place of the two-sided tape to avoid the decrease of the adhesiveness in case the ambient temperature is low.*
- *DO NOT touch the adhesive part by fingers nor re-attach it many times. The adhesiveness has decreased and the RAC adaptor may fall off.*
- *DO NOT apply any force within 24 hours after installation.*

15.3.3. ELECTRICAL WIRING

■ System configuration

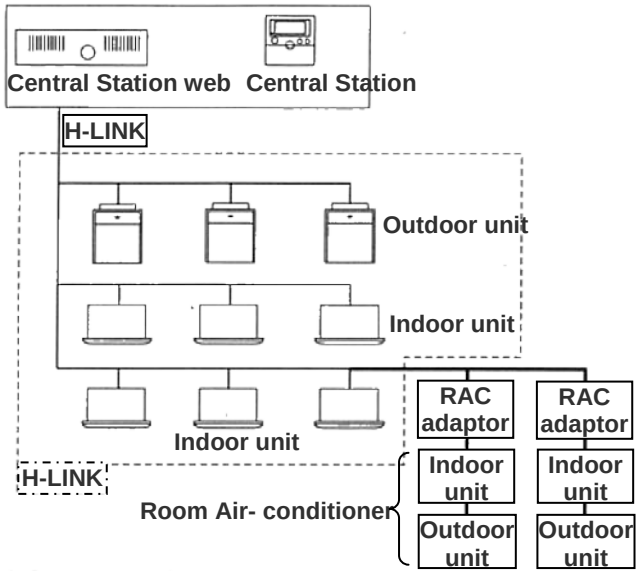

CAUTION:
- *Turn OFF the power supply of the room air-conditioner of the central control device when performing the wiring work*
- *DO NOT run all the H-LINK cable or power supply cable along the other signal cable, or malfunction may occur due to the noise, etc. If it is required to run along the other transmission cable, separate the cable more than 30cm, or run the cable through the metal tube and earth the tube.*
- *Follow local codes and regulations when performing electrical wiring and earth wiring.*
- *Transmissions cable used in H-LINK shall be 2 cores cable (0.7mm^2 to 1.25mm^2 for model: VCTF, VCT, CVV, MVVX, CVVX, VVR, VVF) or 2 cores twisted pair cable (model: KPEV, KPEV-Spec). Total length of cable shall be below 1000mm.*
- *DO NOT use wire with more than 3 cores.*

■ Internal components and Wiring connections

Check the contents and the number of the accessories in the packing.

- Access
  Open the cover by removing the ① and ② screws.

- Wiring Connection
  Connection with Room Air-Conditioner
  i) Remove the front cover of the room air-conditioner and the cover of electrical box.
  ii) The cable attached with the connector of the RAC adaptor shall be connected with the connector of indoor PCB

iii) Install the electrical box cover paying attention not to clamp the cable. Read the installation manual of each room air-conditioner for confirming how to connect and how to assemble the cable of the RAC adaptor.

CAUTION:

– *Disconnect the power plug before performing this work*

– *Turn OFF the break power source in case the power is supplied from the outdoor unit.*

- Connection of Transmission Cable

H-LINK transmission cable connecting to RAC adaptor shall be connected to H-LINK.

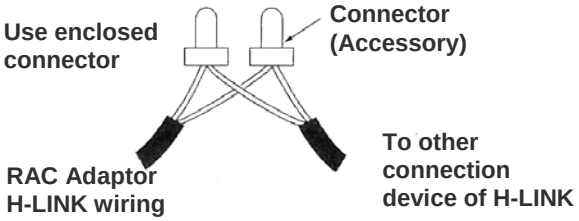

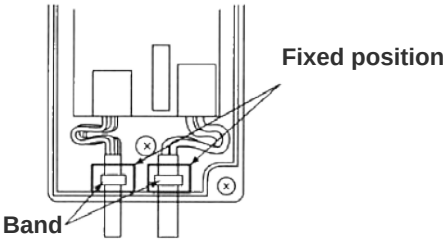

CAUTION:

– *DO NOT connect incorrect wiring. It may cause the failure of the RAC Adaptor. Especially pay attention not to apply high voltage e.g. AC400/230V.*

– *DO NOT perform the wiring work while power to the central station or the RAC Adaptor is still being supplied.. It may cause malfunction. Turn OFF devices when performing the wiring work.*

– *The RAC Adaptor side cable should not overload to the connector.*

– *DO NOT clamp the cable when attaching the RAC adaptor cover.*

– *Band should not be loose and in fixed position.*

15.3.4. DIP SWITCH SETTING

1) Switch OFF the power of room air conditioner before setting the DIP switch. If the power is ON, the settings are INVALID.
2) The position of the DIP switch is shown below.

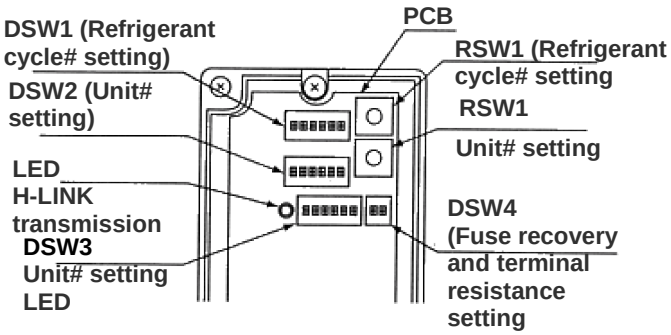

CAUTION:

– *DO NOT turn ON various pins of DSW1 and DSW2*

3) Set the refrigerant cycle# by RSW1 and DSW1

DSW1 (Ten digit)	RSW1 (Last digit)
	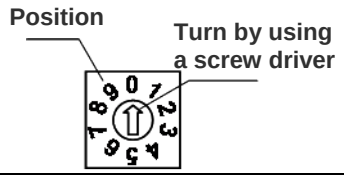
DSW1 and RSW1 are set “0” before shipment. Up to 15 cycles can be set.	
E.g. Setting in Ref No. 5 **No. 1 pin is OFF**	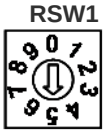 **The position is Set 5**

4) Set the unit No. by RSW2 and DSW2

DSW2 (Ten digit)	RSW2 (Last digit)
	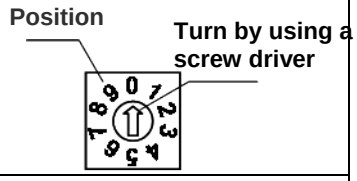
DSW2 and RSW3 are set “0” before shipment. Up to 15 cycles can be set.	
E.g. Setting in Unit No. 15 **No. 1 pin is OFF**	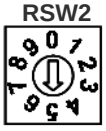 **The position is Set 5**

5) Slave unit.

In case of setting various RAC adaptors in the same refrigerant cycle, set the RAC adaptor with smallest Unit# as a master unit. In case of setting only one RAC adaptor in a refrigerant system, this adaptor should be a master unit. Set this procedure by DSW3.

Master Unit setting	Setting before shipping (slave unit setting)
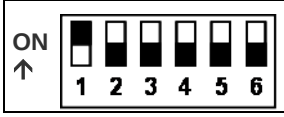	

●: Master Unit setting

○: Setting before Shipping (Slave Unit setting)

Indoor Unit#

Refrigerant Unit#

	0	1	2	3	4	5	6	7		
0	●	○	○	○	○					
1			●	○	○					
2				●	○	○	○	○		
3		●								
4										

CAUTION:

– *DO NOT set various main adaptors in the same refrigerant cycle.*

6) Procedure when applying 200V voltage to H-LINK wiring incorrectly.

In case of applying 200V voltage to H-LINK wiring incorrectly, the fuse installed in a transmission circuit on PCB will blow out. In this case, reconnect the wiring correctly and turn ON No. 2 pin of DSW4 on PCB. The transmission circuit can be recovered. (If applying this error again, the transmission circuit can not be recovered)

PCB

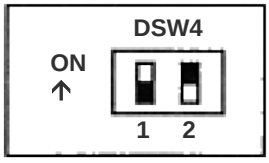

Turn ON No.2 pin of DSW4

7) Terminating resistance is set in whole H-LINK system.

a) If H-LINK connecting devices like package air-conditioner are connected besides the RAC Adaptor, set the terminating resistance by those connecting devices. The terminating resistance should be set ON in only one position in whole H-LINK system.

b) In case that H-LINK is connected only by the RAC adaptor, set the terminating resistance by the RAC adaptor. The terminating resistance should be set ON in only one position in whole H-LINK system.

PCB

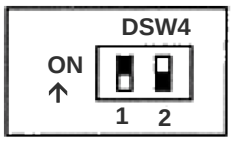

Turn ON No.1 pin of DSW4

15.3.5. TEST RUN

Test run should be performed in the following after finishing the installation, wiring and setting. Refer to the installation manuals enclosed with the control system equipment.

1) Confirmation of RAC Adaptor Connection
Confirm if the RAC adaptor connection is recognized in the control system equipments. In case that it is not confirmed, check the transmission cable, refrigerant cycle #, indoor unit #, terminal resistance setting etc.
2) Registration
Confirm if the RAC adaptor connection is recognized.
3) Confirmation of RUN/STOP Operation.
Confirm if the room air-conditioner operate correctly by RUN/STOP from the central control system equipments. Check also if the room air-conditioner operation changes correctly by each setting.

HITACHI

TC_ERP 00.01 – 06/13